This is a digital copy of a book that was preserved for generations on library shelves before it was carefully scanned by Google as part of a project to make the world's books discoverable online.

It has survived long enough for the copyright to expire and the book to enter the public domain. A public domain book is one that was never subject to copyright or whose legal copyright term has expired. Whether a book is in the public domain may vary country to country. Public domain books are our gateways to the past, representing a wealth of history, culture and knowledge that's often difficult to discover.

Marks, notations and other marginalia present in the original volume will appear in this file - a reminder of this book's long journey from the publisher to a library and finally to you.

Usage guidelines

Google is proud to partner with libraries to digitize public domain materials and make them widely accessible. Public domain books belong to the public and we are merely their custodians. Nevertheless, this work is expensive, so in order to keep providing this resource, we have taken steps to prevent abuse by commercial parties, including placing technical restrictions on automated querying.

We also ask that you:

+ *Make non-commercial use of the files* We designed Google Book Search for use by individuals, and we request that you use these files for personal, non-commercial purposes.
+ *Refrain from automated querying* Do not send automated queries of any sort to Google's system: If you are conducting research on machine translation, optical character recognition or other areas where access to a large amount of text is helpful, please contact us. We encourage the use of public domain materials for these purposes and may be able to help.
+ *Maintain attribution* The Google "watermark" you see on each file is essential for informing people about this project and helping them find additional materials through Google Book Search. Please do not remove it.
+ *Keep it legal* Whatever your use, remember that you are responsible for ensuring that what you are doing is legal. Do not assume that just because we believe a book is in the public domain for users in the United States, that the work is also in the public domain for users in other countries. Whether a book is still in copyright varies from country to country, and we can't offer guidance on whether any specific use of any specific book is allowed. Please do not assume that a book's appearance in Google Book Search means it can be used in any manner anywhere in the world. Copyright infringement liability can be quite severe.

About Google Book Search

Google's mission is to organize the world's information and to make it universally accessible and useful. Google Book Search helps readers discover the world's books while helping authors and publishers reach new audiences. You can search through the full text of this book on the web at `http://books.google.com/`

University of Michigan-Flint Library
4 9015 00289 0870

Non-
Circulating

University of
Michigan
Libraries
1817
FLINT COLLEGE

CASES ARGUED AND DECIDED

IN THE

SUPREME COURT

OF THE

UNITED STATES

OCTOBER TERM, 1887, 1888, IN

127, 128, 129, 130 U. S.

BOOK 32,

LAWYERS' EDITION,

COMPLETE WITH HEAD LINES, HEAD NOTES, STATEMENTS OF CASES, POINTS AND AUTHORITIES OF COUNSEL, FOOT NOTES AND PARALLEL REFERENCES.

BY

STEPHEN K. WILLIAMS, LLD.

THE LAWYERS CO-OPERATIVE PUBLISHING COMPANY
ROCHESTER, NEW YORK

Copyright 1888 by
THE LAWYERS CO-OPERATIVE PUBLISHING CO.

JUSTICES

OF THE

SUPREME COURT OF THE UNITED STATES

DURING THE TIME OF THESE REPORTS.

CHIEF JUSTICE,

HON. MELVILLE WESTON FULLER.

ASSOCIATE JUSTICES,

HON. SAMUEL F. MILLER,
HON. STEPHEN J. FIELD,
HON. JOSEPH P. BRADLEY,
HON. JOHN M. HARLAN,
HON. STANLEY MATTHEWS,[1]
HON. HORACE GRAY,
HON. SAMUEL BLATCHFORD,
HON. LUCIUS Q. C. LAMAR.

ATTORNEYS-GENERAL,

HON. AUGUSTUS H GARLAND

to March 6, 1889; after that

HON. WILLIAM HENRY HARRISON MILLER.

SOLICITOR-GENERAL,

HON. GEORGE AUGUSTUS JENKS.

CLERK,

JAMES H. MCKENNEY, ESQ.

REPORTER,

J. C. BANCROFT DAVIS, ESQ.

MARSHAL,

JOHN M. WRIGHT, ESQ.

1 Died March 22, 1889. By reason of illness, *Mr. Justice* Matthews took no part in the decision of any of the cases reported in this book after volume 127, except the six following: Kidd v. Pearson, p. 346; Leather Manufactures Bank v. Merchants Bank, p. 342; Robinson v. Fair, p. 415; Liverpool & Great Western Steam Co. v. Phœnix Ins. Co., p. 788; Same v. Ins. Co. of N. A., p. 800, and Allen v. Smith, p. 788.

ALLOTMENTS, ETC., OF THE

JUSTICES OF THE SUPREME COURT OF THE UNITED STATES,

AS THEY STOOD DURING THE TERMS OF 1887, AND 1888, TOGETHER WITH THE DATES OF THEIR COMMISSIONS AND TERMS OF SERVICE, RESPECTIVELY.

(Allotments April 2, and Dec. 17, 1888, and May 13, 1889. See App. III. and V., Bk. 31, and IV. and V. herein.)

Names of Justices, and whence appointed.	By whom Appointed.	Circuits, 1888, 1889.	Commissioned.	Sworn in.	Termination.
Associate Justice HORACE GRAY, Massachusetts.	President Arthur.	First. Me., N. H., Mass., Rhode Island.	1881. (Dec. 20.)	1882. (Jan. 9.)	
Associate Justice SAMUEL BLATCHFORD, New York.	President Arthur.	Second. Vermont, Conn., New York.	1882. (Mar. 22.)	1882. (April 3.)	
Associate Justice JOSEPH P. BRADLEY, New Jersey.	President Grant.	Third. New Jersey, Penn., Del.	1870. (Mar. 21.)	1870. (Mar. 23.)	
Chief Justices MORRISON R. WAITE, Ohio.	President Grant.	Fourth.* Md., Va., N. C., W. Va., S. C.	1874. (Jan. 21.)	1874. (Mar. 4.)	Died 1888. (Mar. 23.)
MELVILLE W. FULLER, Illinois.	President Cleveland.		1888. (July 20.)	1888. (Oct. 8.)	
Associate Justice LUCIUS Q. C. LAMAR, Mississippi.	President Cleveland.	Fifth. Ga., Ala., Fla., Miss., La., Tex.	1888. (Jan. 16.)	1888. (Jan. 18.)	
Associate Justice STANLEY MATTHEWS, Ohio.	President Garfield.	Sixth.* Ky., Tenn., Ohio, Mich.	1881. (May 12.)	1881. (May 17.)	Died 1889. (Mar. 22.)
Associate Justice JOHN M. HARLAN,* Kentucky.	President Hayes.	Seventh. Ind., Ill., Wis.	1877. (Nov. 29.)	1877. (Dec. 10.)	
Associate Justice SAMUEL F. MILLER, Iowa.	President Lincoln.	Eighth. Minn., Iowa, Mo. Kan., Ark.., Neb. Colorado.	1862. (July 16.)	1862. (Dec. 1.)	
Associate Justice STEPHEN J. FIELD, California.	President Lincoln.	Ninth. California, Oregon, Nevada.	1863. (Mar. 10.)	1863. (Dec. 7.)	

*See also Appendix V., Book 31, and Appendix V., herein.

GENERAL TABLE OF CASES REPORTED

IN THIS BOOK.

VOLUMES 127, 128, 129, 130.

A.

Active Mfg. Co., Peters v. - - 788, 1057
Adams, Smith v. - - - - - - 895
Ætna Ins. Co., Brodnax v. - - - 445
Agricultural Co., Ann Arbor, Jenkins v. 326
Alaska, The, Metcalfe v. - - - 923
Alden, Bank of Fort Madison v. - - 725
Allen v. Gillette (127 U. S. 589) - - 271
v. Smith (129 U. S. 465) - - 782
Ware v. - - - - - - - 563
Alley, Lyon v. - - - - - - - 899
Allis v. Freeman (127 U. S. 779) - - 330
American Bell Tel. Co., United States v. 450
American Emigrant Co., Swetting v. - 331
Amy v. Watertown (130 U. S. 301, 320) 946, 953
Anderson v. Miller (129 U. S. 70) - 635
Anderson Twine Co. v. Tod (127 U. S. 779) 328
Andes, Town of, v. Slauson (130 U. S. 435) 989
Andrews, Lynch v. - - - - - 328
Andrus v. St. Louis Smelting and Refining Co. (130 U. S. 643) - 1054
"Angarica v. Bayard" (127 U. S. 251) - 159
Angus, De La Mothe v. - - - - 330
Ann Arbor Agricultural Co., Jenkins v. 326
Arizona Prince Copper Co., Copper Queen Min. Co. v. - - - 331
Arkansas Cent. R. Co., Credit Co. v. - 448
Arkansas Valley Land & Cattle Co. v. Mann (130 U. S. 69) - - 854
Arkansas Valley Smelting Co. v. Belden Min. Co. (127 U. S. 379) - 246
Arms, Kimberly v. - - - - - - 764
Arrowsmith v. Gleason (129 U. S. 86) - 630
"Arthur v. Victor" (127 U. S. 572) - - 201
Asher v. State (Tex.) (128 U. S. 129) - 368
Association, Brush Electric, Pollak v. - 474
Fire Ins., v. Wickham - - 568
Atherton, Stitzel v. - - - - - - 328
Averill, United States v. - - - 977

B

Badeau v. United States (130 U. S. 439) - 997
Badger v. Cusimano & Co. (130 U. S. 39) 851
Bailee, United States v. - - - - 332
Bains v. Dodge (127 U. S. 779) - - 331
Baird v. Baldwin (127 U. S. 779) - - 332
Baker, Glasgow v. - - - - - 513
Power v. - - - - - - 327
Baldwin, Baird v. - - - - - 332
v. State (Kan.) (129 U. S. 52) - - 640
Ball, Kimmish v. - - - - - - 695
Ballard v. Searls (130 U. S. 50) - - 846
Baltimore & O. R. Co., Marye v. - 94
Shepherd v. - - - - - - 970
Baltimore & O. Teleg. Co., State, *ex rel.*, Bell Telephone Co. v. - - 328
Baltimore & Potomac R. Co. v. District of Columbia (127 U. S. 780) - 325
v. Hopkins (130 U. S. 210) - - 908
Baltzer v. Bischoffsheim (127 U. S. 780) - 326
Bank, Central Nat., of Washington, v. Hume - - - - - - 370
City Nat., v. Hunter - - - 752
First Nat., of Portsmouth, Livingston County v. - - - 359
German-American, Easton v. - 210
German Sav., v. County of Franklin - - - - - - - 519
International, of Chicago, Jenkins v. - - - - - - 189
Leather Mfrs. Nat., v. Merchants Nat. Bank - - - - 342
Manhattan, v. Walker - - 959
Mechanics Nat., People's Bank v. - - - - - - - 330, 331
Mercantile Nat., Whitbeck v. - 118
Merchants Nat., Leather Mfrs. Nat. Bank v. - - - - 342
Michigan Ins., v. Eldred - - 1080
National Security, v. Butler - - 682
People's, v. Mechanics Nat. Bank - - - - - - - 330, 331
of Fort Madison v. Alden (129 U. S. 372) - - - - - 725
Banks v. Manchester (128 U. S. 244) - 425
Barber, Harris v. - - - - - 697
Barker v. Craig (127 U. S. 213) - - 147
v. Kansas & Gulf Short Line R. Co. (127 U. S. 780) - - - 331
Barnard v. District of Columbia (127 U. S. 409) - - - - - 207
Barney, Chapman v. - - - - 800
Barton v. United States (129 U. S. 249) 663
Batchelor v. Kirkbride (127 U. S. 780) - 332
Bate Refrigerating Co. v. Hammond & Co. (129 U. S. 151) - - - 645
Bates, Callender v. - - - - 326
Baxter Mountain Gold Min. Co. v. Patterson (127 U. S. 780) - - 331
Bayard, United States v. - - - - 159
v. United States *ex rel.* White (127 U. S. 246) - - - - 116
Beckwith, Minneapolis & St. L. R. Co. v. 585
Beebe, United States v. - - - - 121
Belden Min. Co., Arkansas Valley Smelting Co. v. - - - - 246

Bell Telephone Co. v. State, *ex rel.* Baltimore & O. Teleg. Co. (127 U. S. 780) - - - - - - 328
Béné v. Jeantet (129 U. S. 683) - - 803
Bennett, Denny v. - - - - - 491
Benson v. McMahon (127 U. S. 457) - 234
Berry, Rosenwasser v. - - - - - 628
Birdseye v. Heilner (127 U. S. 781) - - 330
Bischoffsheim, Baltzer v. - - - - 326
Bissell v. National Lafayette and Bank of Commerce (127 U. S. 794) - 325
Black, United States, *ex rel.* Dunlap, v. 354
Miller v. - - - - - - - 354
Rose, v. - - - - - - - 354
Blackburn, Hunt v. - - - - 328, 488
Blacklock v. Small (127 U. S. 96) - - 70
Board of Lake Co. Comrs. v. Graham (130 U. S. 674) - - - - - 1065
v. Rollins (130 U. S. 662) - - 1060
Boston & Savannah Steamship Co., Butler v. - - - - - - 1017
Botiller v. Dominguez (130 U. S. 238) - 926
Bourbon County, Smith v. - - - - 78
Boyd, Quimby v. - - - - - - 502
Bradshaw, Chappell, v. - - 369, 578
Branscom v. Wood (127 U. S. 781) - - 329
Brewing Co., Crescent, v. Gottfried - 390
Brinkley, Marrow v. - - - - - 654
Broadhead, United States v. - - 147
Brock v. Northwestern Fuel Co. (130 U. S. 341) - - - - - - 905
Brodnax v. Ætna Ins. Co. (128 U. S. 236) 445
Brown, Danville v. - - - - - 507
v. District of Columbia (127 U. S. 579) - - - - - - - 262
v. District of Columbia (130 U. S. 87) - - - - - - 863
v. Guarantee Trust & Safe Deposit Co. (128 U. S. 403) - - - 468
v. Sutton (129 U. S. 238) - - 664
Brownsville v. Loague (129 U. S. 493) - 780
Norton v. - - - - - 774, 784
Brun, Meissner v. - - - - - - 496
Brush Electric Asso., Pollak v. - - 474
Buck, Rumsey v. - - - - - - 326
Bullitt County v. Washer (130 U. S. 142) 885
Bundy v. Cocke (128 U. S. 185) - - 396
Burdett, *Ex parte* (127 U. S. 771) - - 321
Burgess, Sargent v. - - - - - 604
Butler v. Boston & Savannah Steamship Co. (130 U. S. 527) - - - 1017
National Security Bank v. - 682
Buxton v. Traver (130 U. S. 232) - - 920

C.

Cable Co., Pacific Postal Tel., v. O'Connor - - - - - - - - 488
Calhoun v. Lanaux (127 U. S. 634) - 297
California v. California Pac. R. Co. (127 U. S. 1) - - - - - - 150
v. Central Pac. R. Co. (127 U. S. 1) 150
Helbing v. - - - - - - - 332
v. Northern R. Co. (127 U. S. 1) - 150
v. Southern Pac. R. Co. (127 U. S. 1) 150
California Pac. R. Co., California v. - 150
Callaghan v. Myers (128 U. S. 617) - 547
Callan v. Wilson (127 U. S. 540) - - 223
Callender v. Bates (127 U. S. 781) - 326
Calton v. People of Utah (130 U. S. 83) - 870
Camden v. Mayhew & Co. (129 U. S. 73) 608
Cameron v. Hodges (127 U. S. 322) - - 132
Captain Jack, *Ex parte* (130 U. S. 353) 976
Carr v. Hamilton (129 U. S. 252) - - 669
United States, v. DeWalt - - 485
Central Nat. Bank of Washington v. Hume (128 U. S. 195) - - 370
Central Pac. R. Co., California v. - - 150
v. Santa Clara County (127 U. S. 781) - - - - - - - 329
v. United Nickel Co. (127 U. S. 781) 331
Central Trust Co. v. Seasongood (130 U. S. 432) - - - - - 985
Chae Chan Ping v. United States (130 U. S. 581) - - - - - - 1068
Challenge Corn Planter Co., Farmer's Friend Mfg. Co. v. - - - 529
Chapman v. Barney (129 U. S. 677) - 800
Chappell v. Bradshaw (128 U. S. 132, 584) - - - - - - - - 369, 578
Chateaugay Ore & Iron Co., *Ex parte* (128 U. S. 544) - - - 508
Chicago & Evanston R. Co., Hill v. 651
Chicago, B. & K. C. R. Co. v. Hutchinson (127 U. S. 781) - - 332
Chicago, M. & St. P. R. Co. v. United States (127 U. S. 406) - 180
Chicago, P. & S. R. Co., Peoria & P. U. R. Co. v. - - - - - 110
Chillicothe Foundry & Mach. Works Co., Joyce v. - - - - - 171
Chinese Exclusion Case, The (130 U. S. 581) - - - - - - 1068
Christian, Johnson v. - - - - - 412
City National Bank v. Hunter (129 U. S. 557) - - - - - - 752
Clare, Providence & S. Steamship Co. v. 199
Clark v. Pennsylvania (128 U. S. 395) - 487
Robbins v. - - - - - 292
Cleveland v. Lockwood (127 U. S. 782) - 327
Cleveland Rolling Mill Co., Texas & St. L. R. Co. and Arkansas v. 326
Cocke, Bundy v. - - - - - 396
Coes, Collins Co. v. - - - - - 858
Cogswell v. Fordyce (128 U. S. 391) - 484
Cole, Shreveport v. - - - - - 589
Colgate, United States v. - - - 328
Collins Co. v. Coes (130 U. S. 56) - - 858
Colton v. Colton (127 U. S. 300) - 138
Commissioners, Board of Lake Co. v. Graham - - - - - - 1065
v. Rollins - - - - - - 1060
Consolidated Gas Co., Gibbs v. - 979
Construction Co., Louisiana, New Orleans v. - - - - - 607
Mexican Nat., v. Fry - - - 330
v. Reusens - - - - - - 329
Western Air Line, v. McGillis - 324
Cook, United States v. - - - - 464
Copper Queen Min. Co. v. Arizona Prince Copper Co. (127 U. S. 782) 331
Cornelius v. Kessel (128 U. S. 456) - - 482
Cornell, District of Columbia v. - 1041
v. Weidner (127 U. S. 261) - - 148
Corwin, United States v. - - 710
Cory, Ruckman v. - - - - - - 728
Cotton Press Co., Levee Steam, St. Romes v. 289
Cotzhausen, White v. - - - - - 677
Coy, *Ex parte* (127 U. S. 731) - - 274
Crabtree, Segrist v. - - - - - 323
Cragin v. Powell (128 U. S. 691) - 566
Craig, Barker v. - - - - - - 147
Craig's Exr. v. Leitensdorfer's Admr. (127 U. S. 764) - - - 322
Crawford, Moore v. - - - - - 878

Credit Co. v. Arkansas Cent. R. Co. (128 U. S. 258) - - - - - 448
Crescent Brewing Co. v. Gottfried (128 U. S. 158) - - - - - - 390
Crosby v. Harding (127 U. S. 782) - 329
Culbertson v. H. Witbeck Co. (127 U. S. 326) - - - - - - 134
"Culliford v. Gomila" (128 U. S. 135) 381
v. Vinet (128 U. S. 135) - - - 381
Cumming, United States v. - - 1029
Currie v. United States (129 U. S. 44) - 592
Cusimano & Co., Badger v. - - 851

D.

Dacres, Parker v. - - - - - - 848
Dale v. Marmelstein (127 U. S. 782) - 329
v. Wells (127 U. S. 782) - - 329
Danville v. Brown (128 U. S. 503) - 507
Davies v. Miller (130 U. S. 284) - - 932
Day, Richardson v. - - - - - 328
De La Mothe v. Angus (127 U. S. 785) - 330
Denny v. Bennett (128 U. S. 489) - 491
Dent v. State (W. Va.) (129 U. S. 114) 628
De Saussure v. Gaillard (127 U. S. 216) 125
Detroit, Flower v. - - - - - - 175
De Walt, United States, Carr v. - - 485
District of Columbia, Baltimore & Potomac R. Co. v. - - - 325
Barnard v. - - - - - 207
Brown v. - - - - - 262, 863
v. Cornell (130 U. S. 655) - - 1041
v. Emerson (130 U. S. 229) - - 923
v. Gannon (130 U. S. 227) - 922
Gleason v. - - - - - - 92
v. Murdock (127 U. S. 782) - 332
Dodge, Bains v. - - - - - - 331
Dominguez, Botiller v. - - - - 926
Dow, Memphis & Little Rock R. Co. v. 326, 330
Dowd, Means v. - - - - - 429, 578
Downing, Robertson v. - - - - - 269
Downs v. Hubbard - - - - - 325
Dublin Township, Trustees of, v. Milford Five Cent Sav. Inst. - - 533
Duff v. St. Louis Wooden Ware Works (127 U. S. 782) - - - 329
Dumont v. Fry (130 U. S. 354) - - 934
Reynes v. - - - - - - - 934
Dun, Walker v. - - - - - - - 328
Dunlap v. Northeastern R. Co. (130 U. S. 649) - - - - - 1058
Dunlap, United States, *ex rel.*, v. Black 354
Dyche, Union Pac. R. Co. v. - - 325
Dyersburg, Town of, Norton v. - - 85

E.

Eastern R. Co. v. United States (129 U. S. 391) - - - - - - 730
Easton v. German-American Bank (127 U. S. 532) - - - - - 210
East Tennessee, Va. & Ga. R. Co., Jones v. 470
Pickard v. - - - - 1051
Eddy, Kenny v. - - - - - - - 328
Edmonds, Wilson v. - - - - - 1025
Eggers, Morgan v. - - - - - - 56
Eldred, Michigan Insurance Bank v. - 1080
Elkins Mfg. & Gas Co., Kirk v. - - 327
Ely v. New Mexico & Arizona R. Co. (129 U. S. 291) - - - - - 688
Emerson, District of Columbia v. - 923
Emigrant Co., American, Swetting v. 331
Equitable Co-Operative Foundry Co., Perry v. - - - - - - 328
Estes v. Trabue, Davis & Co. (128 U. S. 225) - - - - - - 437
Ex parte Burdett (127 U. S. 771) - - 321
Captain Jack (130 U. S. 353) - 976
Chateaugay Ore & Iron Co. (128 U. S. 544) - - - - - 508
Coy (127 U. S. 731) - - - - 274
Farmers' Loan & Trust Co. (129 U. S. 206) - - - - - 656
Gon-shay-ee (130 U. S. 343) - - 973
Grant (127 U. S. 783) - - 325
Terry (128 U. S. 289) - - - 405
Extension Co., Richmond & D., Woodstock Iron Co. v. - - 819

F.

Fair, Robinson v. - - - - - - 415
Falk v. Moebs (127 U. S. 597) - - 266
Farmers' Friend Mfg. Co. v. Challenge Corn Planter Co. (128 U. S. 506) - - - - - - 529
Farmers' Loan & Trust Co., *Ex parte* (129 U. S. 206) - - - 656
Farmers' Loan & Trust Co. v. Newman (127 U. S. 649) - - - 303
Farnsworth v. Territory of Montana (129 U. S. 104) - - - - - 616
Faulkner, Hegler v. - - - - - 210
Finzer, Liggett & Myers Tobacco Co. v. 395
Fire Insurance Asso. v. Wickham (128 U. S. 426) - - - - - 503
First Nat. Bank of Portsmouth, Livingston County v. - - - 359
Flower v. City of Detroit (127 U. S. 563) 175
Fordyce, Cogswell v. - - - - 484
Forncrook v. Root (127 U. S. 176) - 97
Foster, United States v. - - 486
Foundry & Machine Works Co., Chillicothe, Joyce v. - - - 171
Foundry Co., Equitable Co-Operative, Perry v. - - - - - 328
Fox, Goodwin v. - - - - - - 805
Franklin County, German Sav. Bank v. 519
Fraser, New York and Colorado Mining Syndicate and Co. v. - - 1031
Freedman's Savings & T. Co. v. Shepherd (127 U. S. 494) - - 163
Freeman, Allis v. - - - - - 330
Friedlander v. Texas & Pacific R. Co. (130 U. S. 416) - - - - - 991
Fry, Dumont v. - - - - - - 934
Mexican National Const. Co. v. - 330
Fuel Co., Northwestern, Brock v. - 905

G.

Gaff v. Gottfried (128 U. S. 170) - - 395
Gaillard, De Saussure v. - - - - 125
Galigher v. Jones (129 U. S. 193) 658
Gannon, District of Columbia v. - - 922
Garfield Mining & Milling Co., Hammer v. 964
Gas Co., Consolidated, Gibbs v. - - 979
Gay, Stuart v. - - - - - - 191
Gazelle, The (128 U. S. 474) - - - 496
Georgia R. R. & Banking Co. v. Smith (128 U. S. 174) - - - 377
Gerardi, Patterson v. - - - - 327

German-American Bank, Easton v. - 210
Germania Fire Ins. Co., Hosford v. - 196
German Savings Bank v. County of Franklin (128 U. S. 526) - 519
Gibbs v. Consolidated Gas Co. (130 U. S. 396) - - - - - - - 979
Gillette, Allen v. - - - - - - - 271
Gilmer, Morris v. - - - - - - - 690
Glacier Mountain Silver Min. Co. v. Willis (127 U. S. 471) - 172, 327
Glasgow v. Baker (128 U. S. 560) - - 513
Gleason, Arrowsmith v. - - - - 630
v. District of Columbia (127 U. S. 183) - - - - - - - 92
Glenn v. McArthur (127 U. S. 783) - 332
Golden State & Miners Iron Works, Hendy v. - - - - 207
Goldsmith, The Suffolk v. - - - - 331
Gon-shay-ee, *Ex parte* (130 U. S. 343) - 973
Goodwin v. Fox (129 U. S. 601) - - 805
Goodyear's India Rubber Glove Mfg. Co. v. Goodyear Rubber Co. (128 U. S. 598) - - - - - - 535
Gottfried, Crescent Brewing Co. v. - 390
Gaff v. - - - - - - - - - 395
Hack v. - - - - - - - - - 395
Gould v. Spicer (127 U. S. 783) - - 326
Graham, Board of Lake Co. Comrs. v. 1065
v. Spencer (127 U. S. 783) - - 326
Grand Rapids & I. R. Co. v. Liles (127 U. S. 783) - - - - - - 326
Grant, *Ex parte* (127 U. S. 783) - - 325
Green, Nelson v. - - - - - - - 872
Richardson v. - - - - - - 872
Sickles v. - - - - - - - 872
Greene v. McArthur (127 U. S. 783) - 332
Guarantee Trust & Safe Depost Co., Brown v. - - - - - - 468
Wood v. - - - - - - - 472
Guardiola, Insurance Co. of N. A. v. - 802

H.

Hack v. Gottfried (128 U. S. 170) - 395
Hall, Thompson v. - - - - - - - 876
Hamilton, Carr v. - - - - - - 669
Hammer v. Garfield Mining & Milling Co. (130 U. S. 291) - - - - 964
Hammond, Noble v. - - - - - - 621
Hammond & Co., Bate Refrigerating Co. v. - - - - - - - 645
Hanbury, Shields v. - - - - - - 565
Hanover Fire Ins. Co. v. Kinneard (129 U. S. 176) - - - - - - 653
Hanson, Peters v. - - - - - - - 742
Harding, Crosby v. - - - - - - - 329
Hill v. - - - - - - - - - 1083
Hardware Co., Simmons, v. National Pump Cylinder Co. - - 326
Harris v. Barber (129 U. S. 366) - - 697
Walworth v. - - - - - - - 712
Hartford Fire Ins. Co., Hosford v. - 198
Hartranft v. Zeh (127 U. S. 783) - - 329
Hassall v. Wilcox (130 U. S. 493) - 1001
Haymaker, Sewall v. - - - - - - 299
Haynes, United States v. - - - - 1060
Hazelton, Kennedy v. - - - - - 576
Hegler v. Faulkner (127 U. S. 482) - 210
Heilner, Birdseye v. - - - - - 330
Helbing v. California (127 U. S. 784) - 332
Hendy v. Golden State & Miners Iron Works (127 U. S. 370) - - 207
Henline v. Perrine (127 U. S. 794) - 326
Hennessey v. Woolworth (128 U. S. 438) 500
Hennick, Stoutenburgh v. - - - - 637
Herrick, Minneapolis & St. L. R. Co. v. 109
"Herrman v. Arthur" (127 U. S. 363) - 186
v. Miller (127 U. S. 363) - - 186
Hill v. Chicago & Evanston R. Co. (129 U. S. 170) - - - - - 651
v. Harding (130 U. S. 699) - - 1083
Hobson, New Mexico & Arizona R. Co. v. - - - - - - - 331
Hodges, Cameron v. - - - - - - 132
Holland v. Shipley (127 U. S. 396) - 185
Holmes, Taylor v. - - - - - - 179
Holt v. Kendall (127 U. S. 784) - - 330
Menendez v. - - - - - - - 526
Ryder v. - - - - - - - - 529
Hopkins, Baltimore & Potomac R. Co. v. 908
Hosford v. Germania Fire Ins. Co. (127 U. S. 399) - - - - - 196
v. Hartford Fire Ins. Co. (127 U. S. 404) - - - - - - - 198
"Hoyt v. Hanbury" (128 U. S. 584) - 565
Hubbard, Downs v. - - - - - - 325
Huling v. Kaw Valley Railway & Improvement Co. (130 U. S. 559) 1045
Hume, Central Nat. Bank of Washington v. - - - - - - - 870
Hunt v. Blackburn (127 U. S. 774) - 323
v. Blackburn (128 U. S. 464) - 488
Hunter, City National Bank v. - - 752
Hurlbut v. Schillinger (130 U. S. 456) - 1011
Hutchinson, Chicago, B. & K. C. R. Co. v. - - - - - - - 332
H. Witbeck Co., Culbertson v. - - 134

I.

Imboden, Lewis v. - - - - - - 328
Inman v. South Carolina R. Co. (129 U. S. 128) - - - - - - 612
Insley, United States v. - - - - 968
Institution, Milford Five Cent. Sav., Trustees of Dublin Twp. v. - - 533
Insurance Co., Ætna, Brodnax v. - 445
Germania Fire, Hosford v. - - 196
Hanover Fire, v. Kinneard - 653
Hartford Fire, Hosford v. - - 198
Massachusetts L., Sargent v. - 326
Pelican, of N. O., State (Wis.) v. 229
Phenix, Liverpool & Great Western Steam Co. v. - - - - 788
Travelers, v. McConkey - - 308
of N. A. v. Guardiola (129 U. S. 642) 802
of N. A., Liverpool & Great Western Steam Co. v. - - - - 800
International Bank of Chicago, Jenkins v. 189
Iron Co., Woodstock, v. Richmond & D. Extension Co. - - - 819
Iron Silver Mining Co., United States v. 571
Iron Works, Golden State & Miners, Hendy v. - - - - - - 207
Irwin, United States v. - - - - 99

J.

Jaehne v. People of N. Y. (128 U. S. 189) 398
Janeway, Pennsylvania R. Co. v. - - 331
Jeantet, Béné v. - - - - - 803

Jenkins v. Ann Arbor Agricultural Co. (127 U. S. 794) - - - 826
v. International Bank of Chicago (127 U. S. 484) - - - 189
Johnson v. Christian (128 U. S. 374) - 412
Ridings v. - - - - - - - 401
Johnstone, Wallace v. - - - - - 619
Jones v. East Tennessee, Va. & Ga. R. Co. (128 U. S. 443) - - 478
Galigher v. - - - - - - 658
v. Nichols (127 U. S. 784) - 832
v. Van Doren (130 U. S. 684) - 1077
"Jones' Admr. v. Craig" (127 U. S. 213) 147
Joyce v. Chillicothe Foundry & Mach. Works Co. (127 U. S. 557) - 171
Justice, Mahon v. - - - - - - 283

K.

Kain v. Nelson (127 U. S. 784) - - 828
Kane v. Northern Cent. R. Co. (128 U. S. 91) - - - - - - - 839
Kansas & Gulf Short Line R. Co., Barker v. - - - - - - 831
Kansas Pac. R. Co. v. Lewis (127 U. S. 784) - - - - - - 825
Kaw Valley Railway and Improvement Co., Huling v. - - - - 1045
Kelley v. Town of Milan (127 U. S. 139) 77
Kendall, Holt v. - - - - - - 830
Kennedy v. Hazelton (128 U. S. 667) - 576
v. Lamb (127 U. S. 784) - - 825
Kenney v. Eddy (127 U. S. 784) - - 828
Kerr, Parley's Park Silver Mining Co. v. 906
Kessel, Cornelius v. - - - - - 482
Kidd v. Pearson (128 U. S. 1) - - - 346
Kilbourn v. Sunderland (130 U. S. 505) 1005
Kimberly v. Arms (129 U. S. 512) - 764
Kimmish v. Ball (129 U. S. 217) - - 695
Kingman & Co., Pattee Plow Co. v. - 700
Kinneard, Hanover Fire Ins. Co. v. - 653
Kirk v. Elkins Mfg. & Gas Co. (127 U. S. 785) - - - - - - 827
Kirkbride, Batchelor v. - - - - - 832
Knowlton v. Watertown (130 U. S. 327, 334) - - - - - 956, 959
Knox, United States v. - - - - - 465

L.

Lamb, Kennedy v. - - - - - - 825
Ro Bards v. - - - - - - - 60
Lanaux, Calhoun v. - - - - - 297
Lancaster, Morley Sewing Mach. Co. v. 715
Land & Cattle Co., Arkansas Valley v. Mann - - - - - - 854
Lansing, Town of, Purdy v. - - - 531
Lawrence v. Merritt (127 U. S. 113) - - 91
Leather Mfrs. Nat. Bank v. Merchants Nat. Bank (128 U. S. 26) - 842
LeClaire v. May (127 U. S. 785) - - 829
Ledoux, Pinkerton v. - - - - - 706
Leitensdorfer's Admr, Craig's Exr. v. 822
Leloup v. Port of Mobile (127 U. S. 640) 311
Leonard v. Lovell (127 U. S. 785) - - 831
Levee Steam Cotton Press Co., St. Romes v. - - - - - - 289
Levey, United States, *ex rel.*, v. Stockslager - - - - - - 785
Lewis v. Imboden (127 U. S. 794) - - 828
Kansas Pac. R. Co. v. - - - - 825
Liggett & Myers Tobacco Co. v. Finzer (128 U. S. 182) - - - - 305
Liles, Grand Rapids & I. R. Co. v. - - 326
Livandais, Marchand v. - - - - 824
Liverpool & Great Western Steam Co. v. Insurance Co. of N. A. (129 U. S. 464) - - - - - - 800
v. Phenix Ins. Co. (129 U. S. 397) 788
Livingston County v. First Nat. Bank of Portsmouth (128 U. S. 102) - 359
Loague, Brownsville v. - - - - - 780
Loan & Trust Co., Farmers v. Newman 303
Lockwood, Cleveland v. - - - - - 327
Loeber v. Wykoff (127 U. S. 785) - 829
Lorillard v. Pride (127 U. S. 785) - - 831
Los Angeles, Southern Pac. R. Co. v. - 330
Louisiana Construction Co., New Orleans v. - - - - - - - 607
Lovejoy v. United States (128 U. S. 171) 339
Lovell, Leonard v. - - - - - - 331
Lynch v. Andrews (127 U. S. 786) - - 328
Lyon v. Alley (130 U. S. 177) - - 899

M.

McAlpine, Union Pacific R. Co. v. - - 673
McArthur, Glenn v. - - - - - - 332
Greene v. - - - - - - - 332
Wilson v. - - - - - - - 332
McConkey, Travelers Ins. Co. v. - - 309
McCormick v. Whitmer (129 U. S. 1) - 593
McCusker, Southern Pac. R. Co. v. - 329
McDonald, United States v. - - - 506
McGillis, Western Air Line Const. Co. v. 324
Mack v. Sloteman (127 U. S. 786) - 327
McKay v. Stowe (127 U. S. 786) - - 325
McKenna v. Simpson (129 U. S. 506) - 771
Mackey, Missouri Pac. R. Co. v. - - 107
McKinley v. Wheeler (130 U. S. 630) - 1048
McLaughlin, United States v. - - - 213
McMahon, Benson v. - - - - - 234
McMaster, Spencer v. - - - - - 327
Mahon v. Justice (127 U. S. 700) - - 283
Manchester, Banks v. - - - - - 425
Manhattan Bank v. Walker (130 U. S. 267) - - - - - - - 959
Mann, Arkansas Valley Land & Cattle Co. v. - - - - - - - 854
Mantle, Noyes v. - - - - - - 168
Manufacturing Co., Active, Peters v. - - - - - 738, 1057
Farmers Friend, v. Challenge Corn Planter Co. - - - - - 529
Goodyear's India Rubber Glove, v. Goodyear Rubber Co. - - 535
Smith Davis, Mellon v. - - - 329
Stillwell and Bierce, v. Phelps - 1035
Manufacturing and Gas Co., Elkins, Kirk v. - - - - - - 827
Marchand v. Livandais (127 U. S. 775) 824
Marmelstein, Dale v. - - - - - 329
Marrow v. Brinkley (129 U. S. 178) - 654
Marsh v. Nichols, Shepard & Co. (128 U. S. 605) - - - - - 538
Marshall v. United States (127 U. S. 786) 329
Marshall Silver Mining Co., United States v. - - - - - - 734
Marye v. Baltimore and O. R. Co. (127 U. S. 117) - - - - - - 94
Massachusetts Hospital L. Ins. Co., Sargent v. - - - - - - 326
May, LeClaire v. - - - - - - 329

Mayhew & Co., Camden v. - - - 608
Means v. Dowd (128 U. S. 273, 583) 429, 578
Mechanics Nat. Bank, People's Bank v. 330, 331
Meissner v. Brun (128 U. S. 474) - - 496
Mellon v. Smith Davis Mfg. Co. (127 U. S. 786) - - - - - 329
Memphis & Little Rock R. Co. v. Dow (127 U. S. 786, 787) - 326, 330
Menendez v. Holt (128 U. S. 514) - - 526
Mercantile Nat. Bank, Whitbeck v. - 118
Merchants Nat. Bank, Leather Mfrs. Nat. Bank v. - - - - - 342
Merritt, Lawrence v. - - - - - 91
Metcalf, Wade v. - - - - - - 661
v. Watertown (128 U. S. 586) - 543
Metcalfe v. The Alaska (130 U. S. 201) 923
M. E. Church, Missionary Soc., Woodman v. - - - - - - 330
Mexican National Const. Co. v. Fry (127 U. S. 787 - - - - - 330
v. Reusens (127 U. S. 787) - - 329
Meyers, Price v. - - - - - - 326
Michigan Insurance Bank v. Eldred (130 U. S. 693) - - - - - 1080
Milan, Town of, Kelley v. - - - 77
Milford Five Cent. Sav. Inst., Trustees of Dublin Twp. v. - - - 533
Mill Co., Cleveland Rolling, Texas & St. L. R. Co. and Arkansas v. - 326
Miller, Anderson v. - - - - - - 635
Davies v. - - - - - - 932
Herrman v. - - - - - - 186
United States, *ex rel.*, v. Black - 354
v. Vietor (127 U. S. 572) - - 201
Mining & Mfg. Co., Schraeder v. Packer 760
Mining & Milling Co., Garfield, Hammer v. - - - - - - 964
Mining Co., Baxter Mountain Gold, v. Patterson - - - - - 331
Belden, Arkansas Valley Smelting Co. v. - - - - - - 246
Copper Queen, v. Arizona Prince Copper Co. - - - - - 331
Glacier Mountain Silver v. Willis 172, 327
Iron Silver, United States v. - 571
Marshall Silver, United States v. 734
Parley's Park Silver, v. Kerr - 906
Minneapolis & St. L. R. Co. v. Beckwith (129 U. S. 26) - - - - 585
v. Herrick (127 U. S. 210) - - 109
Missionary Soc. of M. E. Church, Woodman v. - - - - - - 330
Missouri Pac. R. Co. v. Mackey (127 U. S. 205) - - - - - - 107
Moebs, Falk v. - - - - - - 266
Moore v. Crawford (130 U. S. 122) - - 878
Shotwell v. - - - - - - 827
More v. Steinbach (127 U. S. 70) - - 51
Morgan v. Eggers (127 U. S. 63) - - 56
Morley Sewing Machine Co. v. Lancaster (129 U. S. 263) - - - 715
Morris v. Gilmer (129 U. S. 315) - - 690
Mosher v. St. Louis, I. M. & S. R. Co. (127 U. S. 390) - - - - 249
Mosler Safe & Lock Co. v. Mosler, Bahmann & Co. (127 U. S. 354) 182
Murdock, District of Columbia v. - - 332
Murray v. Pardee (127 U. S. 787) - 325
Myers, Callaghan v. - - - - - 547

N.

Nailor v. Nailor (127 U. S. 787) - - 331
Nashville, Chatanooga and St. L. R. Co. v. State (Ala.) (128 U. S. 96) - 352
National Lafayette and Bank of Commerce, Bissell v. - - - 325
National Pump Cylinder Co., Simmons Hardware Co. v. - - - 326
National Security Bank v. Butler (129 U. S. 223) - - - - - - 682
Navigation and Imp. Co., Southern Inland, Union Trust Co. v. - 1043
Nelson v. Green (130 U. S. 104) - - 872
Kain v. - - - - - - - 328
Nevin, Roach v. - - - - - - 544
Walston v. - - - - - - 544
New Jersey, Williamson v. - - - 915
Newman, Farmers Loan & T. Co. v. - 303
New Mexico & Arizona R. Co., Ely v. 688
v. Hobson (127 U. S. 795) - - 331
New Orleans v. Louisiana Construction Co. (129 U. S. 45) - - 607
New York and Colorado Mining Syndicate and Co. v. Fraser (130 U. S. 611) - - - - - - 1031
Nichols, Jones v. - - - - - - 332
Stevens v. - - - - - - 914
Nichols, Shepard & Co., Marsh v. - 538
Nickel Co., United, Central Pac. R. Co. v. 331
Nickerson v. Nickerson (127 U. S. 668) 314
Noble v. Hammond (129 U. S. 65) - - 621
Northeastern R. Co., Dunlap v. - - 1058
Northern Cent. R. Co., Kane v. - - 339
Northern R. Co., California v. - - 150
Northwestern Fuel Co., Brock v. - - 905
Norton v. Brownsville (129 U. S. 479) 774
v. Brownsville (129 U. S. 505) - 784
v. Dyersburg (127 U. S. 160) - 85
Noyes v. Mantle (127 U. S. 348) - - 168

O.

O'Connor, Pacific Postal Tel. Cable Co. v. 488
Ore & Iron Co., Chateaugay, *Ex parte* 508
Oregonian R. Co., Oregon R. & Nav. Co. v. - - - - - - 837
Oregon R. & Nav. Co. v. Oregonian R. Co. (130 U. S. 1) - - - 837

P.

Pacific Postal Tel. Cable Co. v. O'Connor (128 U. S. 394) - - - 488
Packer, Schraeder Mining & Mfg. Co. v. 760
Page v. United States (127 U. S. 67) - 65
Palmer, United States v. - - - - 442
Pardee, Murray v. - - - - - 325
Park v. United States (127 U. S. 788) - 328
Parker v. Dacres (130 U. S. 43) - - 848
Parks, Redfield v. - - - - - 1053
Parley's Park Silver Mining Co. v. Kerr (130 U. S. 256) - - - 906
Pattee Plow Co. v. Kingman & Co. (129 U. S. 294) - - - - - 700
Patterson, Baxter Mountain Gold Min. Co. v. - - - - - - 331
v. Gerardi (127 U. S. 788) - - 327
Pearson, Kidd v. - - - - - - 346

Pelican Ins. Co. of N. O., State (Wis.) v. 239
Pennsylvania, Clark v. 487
Powell v. 253
Walker v. 261
Western Union Tel. Co. v. 345
Pennsylvania R. Co. v. Janeway (127 U. S. 783) 331
People of N. Y. Jaehne v. 398
Utah, Calton v. 870
People's Bank v. Mechanics Nat. Bank (127 U. S. 783) 330, 331
Peoria & P. U. R. Co. v. Chicago, P. & S. R. Co. (127 U. S. 200) 110
Perkins, Robertson v. 686
Perrine, Henline v. 326
Perry v. Equitable Co-Operative Foundry Co. (127 U. S. 788) 328
United States v. 99
Peters v. Active Mfg. Co. (129 U. S. 530) 738
v. Active Mfg. Co. (130 U. S. 626) 1057
v. Hanson (129 U. S. 541) 742
Phelps, Stillwell and Bierce Mfg. Co. v. 1035
Phenix Ins. Co., Liverpool & Great Western Steam Co. v. 788
Pickard v. East Tenn., Va. & Ga. R. Co. (130 U. S. 637) 1051
Pile, United States v. 904
Pinkerton v. Ledoux (129 U. S. 346) 706
Plimpton v. Winslow (127 U. S. 795) 328
Plow Co., Pattee, v. Kingman & Co. 700
Weir, v. Turnbull 330
Plow Works, St. Paul, v. Starling 251
Pollak v. Brush Electric Asso. (128 U. S. 447) 474
Ponce, Stachelberg v. 569
Port of Mobile, Leloup v. 311
Porter v. White (127 U. S. 235) 112
Powell, Cragin v. 566
v. Pennsylvania (127 U. S. 678) 253
Power v. Baker (127 U. S. 789) 327
Presbyterian Church, Probst v. 642
Price v. Meyers (127 U. S. 789) 326
Pride, Lorillard v. 331
Probst v. Presbyterian Church (129 U. S. 182) 642
Providence & S. Steamship Co. v. Clare (127 U. S. 45) 199
Purdy v. Town of Lansing (128 U. S. 557) 531

Q.

Quarles v. Simrall (127 U. S. 789) 332
Quimby v. Boyd (128 U. S. 488) 502

R.

Railroad Co., Arkansas Cent., Credit Co. v. 448
Baltimore & O., Marye v. 94
Shepherd v. 970
Baltimore & Potomac, v. District of Columbia 325
v. Hopkins 908
California Pac., California v. 150
Central Pac., California v. 150
v. Santa Clara County 329
v. United Nickel Co. 331
Chicago & Evanston, Hill v. 651
Chicago, B. & K. C., v. Hutchinson 332
Chicago, M. & St. P., v. United States 180
Railroad Co., Chicago, P. & S., Peoria & P. U. R. Co. v. 110
Eastern, v. United States 730
East Tennessee, Va. & Ga., Jones v. 478
Pickard v. 1051
Grand Rapids & I., v. Liles 326
Kansas & Gulf Short Line, Barker v. 331
Kansas Pac., v. Lewis 325
Memphis & Little Rock, v. Dow 326, 330
Minneapolis & St. L., v. Beckwith 585
v. Herrick 109
Missouri Pac., v. Mackey 107
Nashville, Chatanooga & St. L., v. State (Ala.) 352
New Mexico & Arizona, Ely v. 688
v. Hobson 331
Northern, California v. 150
Northern Cent., Kane v. 339
Northeastern, Dunlap v. 1058
Oregonian, Oregon R. & Nav. Co. v. 837
Pennsylvania, v. Janeway 331
Peoria & P. U., v. Chicago, P. & S. R. Co. 110
St. Louis, I. M. & S., Mosher v. 249
South Carolina, Inman v. 612
Southern Pac., California v. 150
v. Los Angeles 330
v. McCusker 329
v. Santa Clara County 329
Texas & Pacific, Friedlander v. 991
v. Toothman 330
Texas & St. L. and Arkansas, v. Cleveland Rolling Mill Co. 326
Union Pacific v. Dyche 325
v. McAlpine 673
R. R. & Banking Co., Georgia, v. Smith 377
Railway and Improvement Co., Kaw Valley, Huling v. 1045
Railway & Nav. Co., Oregon, v. Oregonian R. Co. 837
Ralston v. Turpin (129 U. S. 663) 747
Ratterman v. Western Union Tel. Co. (127 U. S. 411) 229
Redfield v. Parks (130 U. S. 623) 1053
Refrigerating Co., Bate, v. Hammond & Co. 645
Reisinger, United States v. 480
Reusens, Mexican National Const. Co. v. 329
Reynes v. Dumont (130 U. S. 354) 934
Richardson v. Day (127 U. S. 789) 328
v. Green (130 U. S. 104) 872
Richmond & D. Extension Co., Woodstock Iron Co. v. 819
Ridings v. Johnson (128 U. S. 212) 401
Roach v. Nevin (128 U. S. 578) 544
Ro Bards v. Lamb (127 U. S. 58) 60
Robbins v. Clark (127 U. S. 622) 292
"Robbins v. Rollins" (127 U. S. 622) 292
Robertson v. Downing (127 U. S. 607) 269
v. Perkins (129 U. S. 233) 686
v. Salomon (130 U. S. 412) 995
v. Sichel (127 U. S. 507) 203
Robinson v. Fair (128 U. S. 53) 415
v. Wall (127 U. S. 789) 331
Rollins, Board of Lake Co. Comrs. v. 1060
Root, Forncrook v. 97
Rose, United States, *ex rel.*, v. Black 354
Rosenbaum, Woods v. 329
Rosenwasser v. Berry (129 U. S. 47) 628
Rubber Co., Goodyear, Goodyear's India Rubber Glove Mfg. Co. v. 535

Rucker v. Wheeler (127 U. S. 85) - - 102
Ruckman v. Cory (129 U. S. 387) - 728
Rude v. Westcott (130 U. S. 152) - - 888
Rumsey v. Buck (127 U. S. 795) - - 326
Russ, Telfner v. - - - - - - 332
Ryder v. Holt (128 U. S. 525) - - 529

S.

Safe & Lock Co., Mosler, v. Mosler, Bahmann & Co. - - - - - 182
St. Louis, I. M. & S. R. Co., Mosher v. 249
St. Louis Smelting and Refining Co., Andrus v. - - - - - 1054
St. Louis Wooden Ware Works, Duff v. 329
St. Paul Plow Works v. Starling (127 U. S. 376) - - - - - - 251
St. Romes v. Levee Steam Cotton Press Co. (127 U. S. 614) - - 289
Salomon, Robertson v. - - - - - 995
Santa Clara County, Central Pac. R. Co. v. - - - - - - 329
Southern Pac. R. Co. v. - - 329
Sargent v. Burgess (129 U. S. 19) - 604
v. Massachusetts Hospital L. Ins. Co. (127 U. S. 789) - - 326
Savings and Trust Co., Freedman's, v. Shepherd - - - - - 163
Schillinger, Hurlbut v. - - - - 1011
Schraeder Mining & Mfg. Co. v. Packer (129 U. S. 688) - - - - 760
Scarls, Ballard v. - - - - - - 846
Seasongood, Central Trust Co. v. - 985
Segrist v. Crabtree (127 U. S. 773) - - 323
Seibert v. United States (129 U. S. 192) 645
Sewall v. Haymaker (127 U. S. 719) - 299
Shaughnessy, Synnott v. - - - - 1038
Shepherd v. Baltimore & O. R. Co. (130 U. S. 426) - - - - - 970
Freedman's Savings & Trust Co. v. 163
v. Thompson (127 U. S. 494) - 163
Shields v. Hanbury (128 U. S. 584) - 565
Shipley, Holland v. - - - - - 185
Shotwell v. Moore (129 U. S. 590) - 827
Shreveport v. Cole (129 U. S. 36) - - 589
Sichel, Robertson v. - - - - - 203
Sickles v. Green (130 U. S. 104) - - 872
Sill v. Solberg (127 U. S. 795) - - 330
Simmons Hardware Co. v. National Pump Cylinder Co. (127 U. S. 790) - 326
Simpson, McKenna v. - - - - - 771
Simrall, Quarles v. - - - - - - 332
Slauson, Town of Andes v. - - 989
Sliney v. United States (127 U. S. 790) - 326
Sloteman, Mack v. - - - - - 327
Small, Blackblock v. - - - - - 70
Smelting & Refining Co., St. Louis, Andrus v. - - - - - - 1054
Smelting Co., Arkansas Valley, v. Belden Min. Co. - - - - - 246
Smith v. Adams (130 U. S. 167) - - 895
Allen v. - - - - - - - 732
v. Bourbon County (127 U. S. 105) 73
Georgia R. R. & Banking Co. v. 377
Smith Davis Mfg. Co., Mellon v. - - 329
Solberg, Sill v. - - - - - - 330
South Carolina R. Co., Inman v. - - 612
Southern Inland Nav. and Improvement Co., Union Trust Co. v. - 1043
Southern Pac. R. Co., California v. - 150
v. Los Angeles (127 U. S. 790) 330
v. McCusker (127 U. S. 790) - 329
Southern Pac. R. Co. v. Santa Clara County (127 U. S. 790) - - 329
Spalding v. Watertown (130 U. S. 327, 334) - - - 956, 959
Spencer, Graham v. - - - - - 326
v. McMaster (127 U. S. 791) - 327
Spicer, Gould v. - - - - - - 326
Stachelberg v. Ponce (128 U. S. 686) - 569
Starling, St. Paul Plow Works v. - 251
State (Ala.), Nashville, Chattanooga & St. L. R. Co. v. - - - - 353
(Kan.), Baldwin v. - - - - 640
(La.), United States v. - - - 66
(Mo.), *ex rel.* Baltimore & O. Teleg. Co., Bell Telephone Co. v. 328
(Tex.), Asher v. - - - - - 368
(W. Va.) Dent. v. - 623
(Wis.) v. Pelican Ins. Co. of N. O. (127 U. S. 265) - - - 239
Steam Co., Liverpool & Great Western, v. Insurance Co. of N. A. - 800
v. Phenix Ins. Co. - - - - - 788
Steamship Co., Boston & Savannah, Butler v. - - - - - 1017
Providence & S., v. Clare - - 199
Steinbach, More v. - - - - - 51
Stevens v. Nichols (130 U. S. 230) - - .914
Stewart v. Wyoming Cattle Ranche Co. (128 U. S. 383) - - - 439
Stillwell & Bierce Mfg. Co. v. Phelps (130 U. S 520) - - - 1035
Stitzel v. Atherton (127 U. S. 791) - 328
Stockslager, United States, *ex rel.* Levey v. 785
Stoutenburgh v. Hennick (129 U. S. 141) 637
Stowe, McKay v. - - - - - - 325
Stuart v. Gay (127 U. S. 518) - - 191
Suffolk, The, v. Goldsmith (127 U. S. 791) 331
Sunderland, Kilbourn v. - - - - 1005
Sutton, Brown v. - - - - - - 664
Swetting v. American Emigrant Co. (127 U. S. 791) - - - - - 331
Synnott v. Shaughnessy (130 U. S. 572) 1038

T.

Taylor v. Holmes (127 U. S. 489) - - 179
Telegraph Co., Western Union, v. Pennsylvania - - - - - 345
Ratterman v. - - - - - 229
Telephone Co., American Bell, United States v. - - - - - 450
Bell, v. State (Mo.), *ex rel.* Baltimore & O. Teleg. Co. - - 328
Telfner v. Russ (127 U. S. 791) - - 332
Territory of Montana, Farnsworth v. - 616
Terry, *Ex parte* (128 U. S. 289) - - 405
Texas & Pacific R. Co., Friedlander v. - 991
v. Toothman (127 U. S. 791) - 330
Texas & St. L. R. Co. and Arkansas v. Cleveland Rolling Mill Co. (127 U. S. 792) - - - 326
Thompson v. Hall (130 U. S. 117) - 876
Shepherd v. - - - - - 163
Tillson v. United States (129 U. S. 101) - 636
Tobacco Co., Liggett & Myers v. Finzer 395
Tod, Anderson Twine Co. v. - - 328
Toothman, Texas & Pac. R. Co. v. - - 330
Trabue, Davis & Co., Estes v. - - 437
Travelers Ins. Co. v. McConkey (127 U. S. 661) - - - - - 308
Traver, Buxton v. - - - - - - 920

Trust and Safe Deposit Co., Guarantee, Brown v. - - - - - - 468
Wood v. - - - - - - 472
Trust Co., Central, v. Seasongood - - 985
Union, v. Southern Inland Nav. and Improvement Co. - - 1043
Trustees of Dublin Twp. v. Milford Five Cent. Sav. Inst. (128 U. S. 510) 533
Turnbull, Weir Plow Co. v. - - - - 330
Turpin, Ralston v. - - - - - 747
Twine Co., Anderson, v. Tod - - - 328

U.

Underwood v. Warren (127 U. S. 795) - 330
Union Pacific R. Co. v. Dyche (127 U. S. 792) - - - - - - 325
v. McAlpine (129 U. S. 305) - 678
Union Trust Co. v. Southern Inland Nav. & Improvement Co. (130 U. S. 565) - - - - - - - 1043
United Nickel Co., Central Pac. R. Co. v. 331
United States v. American Bell Tel. Co. (128 U. S. 315) - - - - 450
v. Averill (130 U. S. 335) - - 977
v. Bailee (127 U. S. 792) - - 332
v. Bayard (127 U. S. 251) - - 159
v. Beebe (127 U. S. 338) - - 121
v. Broadhead (127 U. S. 312) - - 147
v. Colgate (127 U. S. 792) - - 328
v. Cook (128 U. S. 254) - - 464
v. Corwin (129 U. S. 381) - - 710
v. Cumming (130 U. S. 452) - 1029
v. Foster (128 U. S. 435) - - 486
v. Haynes (130 U. S. 653) - - 1060
v. Insley (130 U. S. 263) - - 968
v. Iron Silver Min. Co. (128 U. S. 673) 571
v. Irwin (127 U. S. 125) - - - 99
v. Knox (128 U. S. 230) - - 465
v. McDonald (128 U. S. 471) - - 506
v. McLaughlin (127 U. S. 428) - 213
v. Marshall Silver Mining Co. (129 U. S. 579) - - - - - 734
v. Palmer (128 U. S. 262) - - 442
v. Perry (127 U. S. 125) - - - 99
v. Pile (130 U. S. 280) - - 904
v. Reisinger (128 U. S. 398) - - 480
v. State (La.) (127 U. S. 182) - 66
v. Watson (130 U. S. 80) - - 852
v. Weld (127 U. S. 51) - - - 62
Badeau v. - - - - - - - 997
Barton v. - - - - - - 663
Chae Chan Ping v. - - - - 1068
Chicago, M. & St. P. R. Co. v. - 180
Currie v. - - - - - - - 592
Eastern R. Co. v. - - - - - 730
Lovejoy v. - - - - - - - 389
Marshall v. - - - - - - - 329
Page v. - - - - - - - 65
Park v. - - - - - - - 328
Seibert v. - - - - - - - 645
Sliney v. - - - - - - - 326
Tillson v. - - - - - - - 636
Carr, v. DeWalt (128 U. S. 393) - 485
ex rel., Angarica, v. Bayard (127 S., 251) - - - - - 159
Dunlap, v. Black (128 U. S. 40) 354
Levey, v. Stockslager (129 U. S. 470) - - - - - 785
Miller, v. Black (128 U. S. 40) 354
United States, ex rel., Rose, v. Black (128 U. S. 40) - - - - - 354
White, Bayard v. - - - 116

V.

Van Doren, Jones v. - - - - - 1077
Victor, Miller v. - - - - - - 201
Vinet, Culliford v. - - - - - - 381

W.

Wade v. Metcalf (129 U. S. 202) - - 661
Walker v. Dun (127 U. S. 792) - - 328
Manhattan Bank v. - - - - 959
v. Pennsylvania (127 U. S. 699) - 261
Wall, Robinson v. - - - - - - 331
Wallace v. Johnstone (129 U. S. 58) - - 619
Walston v. Nevin (128 U. S. 578) - 544
Walworth v. Harris (129 U. S. 355) - - 712
Ware v. Allen (128 U. S. 590) - - 563
Warren, Underwood v. - - - - - 330
Washer, Bullitt County v. - - - - 885
Watertown, Amy v. - - - - - 946, 953
Knowlton v. - - - - 956, 959
Metcalf v. - - - - - - - 543
Spalding v. - - - - - 956, 959
Watson, United States v. - - - - - 852
Weidner, Cornell v. - - - - - 148
Weir Plow Co. v. Turnbull (127 U. S. 793) - - - - - - - 330
Weld, United States v. - - - - - 62
Wells, Dale v. - - - - - - - 329
Westcott, Rude v. - - - - - - 888
Western Air Line Const. Co. v. McGillis (127 U. S. 776) - - - - 324
Western Union Tel. Co. v. Pennsylvania (128 U. S. 39) - - - - 345
Ratterman v. - - - - - - 229
Wheeler, McKinley v. - - - - - 1048
Rucker v. - - - - - - - 102
Whitbeck v. Mercantile Nat. Bank (127 U. S. 193) - - - - - 118
White v. Cotzhausen (129 U. S. 329) - 677
Porter v. - - - - - - - 112
United States, ex rel., Bayard v. - 116
Whitmer, McCormick v. - - - - 593
Wickham, Fire Insurance Asso. v. - - 503
Wilcox, Hassall v. - - - - - 1001
Williamson v. New Jersey (130 U. S. 189) 915
Willis, Glacier Mountain Silver Min. Co. v. - - - - - 172, 327
Wilson, Callan v. - - - - - - 223
v. Edmonds (130 U. S. 472) - - 1025
v. McArthur (127 U. S. 793) - 332
Winslow, Plimpton v. - - - - - 328
Wood, Branscom v. - - - - - 329
v. Guarantee Trust & Safe Deposit Co. (128 U. S. 416) - - - 472
Wooden Ware Works, St. Louis, Duff v. 329
Woodman v. Missionary Society of M. E. Church (127 U. S. 794) - 330
Woods v. Rosenbaum (127 U. S. 793) - 329
Woodstock Iron Co. v. Richmond & D. Extension Co. (129 U. S. 643) 819
Woolworth, Hennessey v. - - - - 500
Wykoff, Loeber v. - - - - - - 329
Wyoming Cattle Ranche Co., Stewart v. 439

Z.

Zeb, Hartranft v. - - - - - - 329

CASES

ARGUED AND DECIDED

IN THE

SUPREME COURT

OF THE

UNITED STATES

IN

OCTOBER TERM, 1887.

Vol. 127.

REFERENCE TABLE

OF SUCH CASES

DECIDED IN U. S. SUPREME COURT,

OCTOBER TERM, 1887,

AND REPORTED HEREIN,

VOL. 127,

AS ALSO APPEAR IN

OFFICIAL REPORTER'S EDITION.

Off. Rep. 127 U. S.	Title.	Here in.
1	California v. Central Pacific R. R. Co.	
	California v. Southern Pacific R. R. Co.	
	California v. Northern R. Co.	
	California v. California Pacific R. R. Co.	150
26–29	" "	153
29–32	" "	154
32–35	" "	155
35–38	" "	156
38–41	" "	157
41–43	" "	158
43–45	" "	159
45–47	Providence & S. Steamship Co. v. Clare's Admrx.	199
47–50	" " "	200
50	" " "	201
51	United States v. Weld	62
51–53	" "	63
53–56	" "	64
56–58	" "	65
58	Ro Barda v. Lamb	60
61–63	" "	62
63	Morgan v. Eggers	56
65–67	" "	59
67–68	Page v. United States	65
68–69	" " "	66
70	More v. Steinbach	51
78–80	" "	54
80–83	" "	55
83–85	" "	56
85	Rucker v. Wheeler	102
92–93	" "	105
93–96	" "	106
96	" "	107
96	Blacklock v. Small	70
97–99	" "	72
99–105	" "	73
105	Smith v. Bourbon County	73
100–111	" " "	76
111–113	" " "	77
113–114	Lawrence v. Merritt	91
114–116	" "	92
117	Marye v. Baltimore & O. R. R. Co.	94
117–119	" " " "	95
119–124	" " " "	96
124–125	" " " "	97
125	United States v. Irwin, " Perry	99
126–128	" "	100
128–131	" "	101
131–133	" "	102
133	Gleason v. District of Columbia	92
134–136	" " "	93
136–139	" " "	94
139	Kelley v. Milan	77
139–142	" "	79
142–145	" "	80
145–147	" "	81
148–152	" "	82
152–155	" "	83
155–158	" "	84
158–160	" "	85
160	Norton v. Dyersburg	85
161	" "	86
161–169	" "	87
169–170	" "	88
170–172	" "	89
172–175	" "	90
175–176	" "	91
176	Forncrook v. Root	97
177–179	" "	98
179–181	" "	99
182	United States v. Louisiana	66
182–184	" "	67
184–187	" "	68
187–190	" "	69
190–193	" "	70
193	Whitbeck v. Mercantile Nat. Bank	118
194–197	" " "	119
197–200	" " "	120
200	" " "	121

Off. Rep. 127 U. S.	Title.	Here in.
200	Peoria & P. U. R. Co. v. Chicago, P. & S. R. R. Co. - -	110
201-203	" "	111
203-205	" "	112
205	Missouri Pacific R. Co. v. Mackey	107
206-208	" " "	108
208-210	" " "	109
210	Minneapolis & St. L. R. Co. v. Herrick	109
210-212	" " "	110
212-213	United States v. Broadhead	147
213-214	Jones' Admr. v. Craig -	147
214-216	" "	148
216	De Saussure v. Gaillard -	125
217-220	" "	126
220-222	" "	127
222-225	" "	128
226	" "	129
226-229	" "	130
229-232	" "	131
232-234	" "	132
235	Porter v. White -	112
235-238	" "	113
238-241	" "	114
241-244	" "	115
244-245	" "	116
246	Bayard v. United States, *ex rel.* White - - - - - -	116
247-250	" " "	117
250	" " "	118
251	United States, *ex rel.* Angarica, v. Bayard	159
252-255	" " "	160
255-257	" " "	161
257-260	" " "	162
260-261	" " "	163
261	Cornell v. Weidner -	148
261-263	" "	149
263-265	" "	150
265	State of Wisconsin v. Pelican Ins. Co.	239
286-288	" " "	242
288-291	" " "	243
291-294	" " "	244
294-297	" " "	245
297-300	" " "	246
300	Colton v. Colton - - -	138
307	" "	141
307-310	" "	142
310-313	" "	143
313-316	" "	144
316-319	" "	145
319-322	" "	146
322	Cameron v. Hodges -	132
322-325	" "	133
325-326	" "	134
326	Culbertson v. Witbeck Co. -	134
328-330	" " "	135
330-333	" " "	136
333-336	" " "	137
336-337	" " "	138
338	United States v. Beebe -	121
341-343	" "	123
343-346	" "	124
346-348	" "	125
348	Noyes v. Mantle - - -	168
349-351	" "	169
351-354	" "	170
354	" "	171

Off. Rep. 127 U. S.	Title.	Here in.
354	Mosler Safe & Lock Co. v. Mosler	183
355-358	" " "	183
358-361	" " "	184
361-363	" " "	185
363	Herrman v. Arthur's Exrs.	186
364-366	" "	187
366-369	" "	188
369-370	" "	189
370	Hendy v. Golden State & Miner's Iron Works - - -	207
370-372	" " "	208
372-376	" " "	209
376	" " "	210
376	St. Paul Plough Works v. Starling - - - - - -	251
376-378	" " "	252
378	" " "	253
379	Arkansas Valley Smelting Co. v. Belden Min. Co. - -	246
387-389	" " " "	248
389-390	" " " "	249
390	Mosher v. St. Louis, I. M. & S. R. Co. - - - - -	249
393-394	" " "	250
394-396	" " "	25.
396-397	Holland v. Shipley - -	185
397-398	" " - - -	186
399	Hosford v. Germania Fire Ins. Co.	196
402	" " "	197
402-404	" " "	198
404	Hosford v. Hartford Fire Ins. Co.	198
405	" " "	199
406	Chicago, M. & St. P. R. Co. v. United States - - -	180
407-408	" " "	181
408-409	" " "	182
409-411	Barnard v. District of Columbia	207
411	Ratterman v. Western Union Tel. Co. - - - -	229
412	" " "	230
412-415	" " "	231
415-425	" " "	232
425-428	" " "	233
428	" " "	234
428	United States v. McLaughlin	213
430-431	" " "	214
431-434	" " "	215
434-437	" " "	216
437-440	" " "	217
440-443	" " "	218
443-446	" " "	219
446-449	" " "	220
449-452	" " "	221
452-455	" " "	222
455-457	" " "	223
457	De Witt v. McLaughlin -	223
457	Friend v. Wise - - -	223
457	Benson v. McMahon - -	234
458-460	" " - - -	235
460-463	" " - - -	236
463-465	" " - - -	237
466-468	" " - - -	238
468-471	" " - - -	239
471	Glacier Mountain Silver Min. Co. v. Willis - - - -	172
472-474	" " " "	173
474-475	" " " "	174
479-482	" " " "	174
482	" " " "	175

Off. Rep. 126 U. S.	Title.	Here in.
482–483	Hegler v. Faulkner	210
484	Jenkins v. International Bank	189
487–488	" " "	190
489	" " "	191
489–491	Taylor v. Holmes	179
491–494	" "	180
494	Freedman's Saving & Trust Co. v. Shepherd	
	Shepherd v. Thompson	168
494–496	" "	164
496–499	" "	165
499–502	" "	166
502–505	" "	167
505–507	" "	168
507–508	Robertson v. Sichel	203
508–511	" "	204
511–514	" "	205
514–517	" "	206
517	" "	207
518	Stuart v. Gay	191
526	" "	193
526–529	" "	194
529–532	" "	195
532	Easton v. German-American Bank	210
536–538	" " "	212
538–539	" " "	213
540	Callan v. Wilson	223
540–541	" "	224
541–543	" "	225
547–548	" "	225
548–551	" "	226
551–554	" "	227
554–557	" "	228
557	" "	229
557–560	Joyce v. Chillicothe Foundry	171
560–562	" " "	172
563	Flower v. Detroit	175
563–565	" "	176
565–569	" "	177
569–572	" "	178
572	" "	179
572–574	Arthur's Exrs. v. Victor	201
574–577	" "	202
577–578	" "	203
579–580	Brown v. District of Columbia	262
580–583	" " "	263
583–586	" " "	264
586–589	" " "	265
589	" " "	266
589	Allen v. Gillette	271
590–592	" "	272
592–594	" "	273
594–596	" "	274
597–598	Falk v. Moebs	266
598–599	" "	267
600–603	" "	267
603–606	" "	268
606–607	" "	269
607–608	Robertson v. Downing	269
608–612	" "	270
612–614	" "	271
614	St. Romes v. Levee Steam Cotton Press Co.	289
614–617	" "	290
617–620	" "	291
620–621	" "	292
622	Robbins v. Rollin's Exrs.	292
622–624	" " "	293
624–627	" " "	294

Off. Rep. 127 U. S.	Title	Here in.
627–630	Robbins v. Rollin's Exrs.	295
630–633	" " "	296
633	" " "	297
634–636	Calhoun v. Lanaux	297
636–638	" "	298
638–640	" "	299
640	Leloup v. Port of Mobile	311
641–643	" "	312
643–646	" "	313
646–649	" "	314
649	Farmers Loan & T. Co. v. Newman	303
650	" " " "	304
650–653	" " " "	305
653–656	" " " "	306
656–659	" " " "	307
659–661	" " " "	308
661	Travellers Ins. Co. v. McConkey	308
661–663	" " " "	309
663–666	" " " "	310
666–668	" " " "	311
668	Nickerson v. Nickerson	314
669–670	" "	316
670–673	" "	317
673–676	" "	318
676–677	" "	319
678	Powell v. Pennsylvania	253
679	" "	254
679–681	" "	255
681–685	" "	256
685–688	" "	257
688–691	" "	258
691–694	" "	259
694–696	" "	260
696–699	" "	261
699	Walker v. Pennsylvania	261
700	Mahon v. Justice	283
704	" "	284
704–707	" "	285
707–710	" "	286
710–713	" "	287
713–716	" "	288
716–718	" "	289
719	Sewall v. Haymaker	299
719–722	" "	300
722–725	" "	301
725–728	" "	302
728–730	" "	303
731	*In Re* Coy	274
732–740	"	275
740–746	"	276
746–749	"	277
749–752	"	278
752–755	"	279
755–758	"	280
758–761	"	281
761–764	"	282
764	"	283
764–770	Craig v. Leitensdorfer	322
771	" "	323
771	*In Re* Burdett	331
773	"	332
773	Seagrist v. Crabtree	323
774	" "	324
774–775	Hunt v. Blackburn	323
775–776	Marchand v. Livandais	324
776	Western Air Line Const. Co. v. McGillis	324
777	" " " "	325

THE DECISIONS

OF THE

Supreme Court of the United States,

AT

OCTOBER TERM, 1887.

[Authenticated copy of opinion record strictly followed, except as to such reference words and figures as are enclosed in brackets.]

[70] A. P. MORE ET AL., *Appts.*,

v.

RUDOLPH STEINBACH ET AL.

(See S. C. Reporter's ed. 70-85.)

California land claim—decision of board—U. S. patent—Mexican grant—laws of conquered country—Code of California.

*1. The Act of Congress of March 3, 1851, "to ascertain and settle the private land claims in the State of California," 9 Stat. at L. 631, created a board of commissioners to which all persons claiming land by virtue of any right or title derived from the Spanish or Mexican government were required to present their claims for examination and determination within two years from its date, with such documentary evidence and testimony of witnesses as they relied upon to support their claims; and provided, in substance, that if upon examination they were found by the board, and by the courts of the United States, to which an appeal could be taken, to be valid, the claims should be confirmed and surveyed, and patents issued therefor to the claimants, but that all lands the claims to which were not presented to the board within that period should be considered as a part of the public domain of the United States. *Held:*

(*a*) That this provision requiring the presentation of their claims was obligatory on claimants, and that they were bound by the judgment of the board, if confirmed by the courts of the United States on appeal, and by the survey and location of the claim by the officers of the Land Department, following the final decree of confirmation.

(*b*) That the patent of the United States, issued after the claim was surveyed and located, is conclusive, both as to the validity of the title of the claimant and the extent and boundaries of his claim, as against all parties not claiming by superior title, such as would enable them to contest the action of the government respecting the property.

2. In order that a perfect title to land might vest under a grant from the Mexican Government, a delivery of possession by its officers was necessary. The proceeding was termed a judicial delivery of possession.

3. The authority and jurisdiction of Mexican officials in California terminated on the 7th of July, 1846. No alcalde appointed or elected subsequent to that date was empowered to give judicial possession of land granted by the previous government.

4. The doctrine that the laws of a conquered or ceded country, except so far as affected by the political institutions of the new government, remain in force, after conquest or cession, until changed by it, does not apply to laws authorizing the alienation of any portions of the public domain, or to officers charged under the former government with that power. No proceedings affecting the rights of the new government over public property could be taken, except in pursuance to its authority on the subject.

5. Under the Code of Civil Procedure of California a plaintiff asserting title to lands, though out of possession, may maintain an action to determine an adverse claim, estate, or interest in the premises.

*Head notes by *Mr. Justice* FIELD.

[No. 176.]

Submitted Feb. 9, 1888. Decided April 16, 1888.

APPEAL from a decree of the Circuit Court of the United States for the District of California, determining, in favor of plaintiffs, adverse claims to lands in California. *Affirmed.*

Statement by *Mr. Justice* **Field:**

This is a suit in equity to determine the adverse claims of the defendants below, appellants here, to certain lands in the County of Ventura, in the State of California. One of the plaintiffs, Rudolph Steinbach, is an alien, and a subject of the Emperor of Germany. The other plaintiff, Horace W. Carpentier, is a citizen of the State of New York. The defendants are all citizens of the State of California. In their complaint the plaintiffs allege that they are the owners in fee of the premises, which are fully described; that the defendants claim an estate therein adverse to them; that such claim is wholly unfounded and invalid in law or equity; and that its assertion depreciates the value of their title and property, and prevents them from using or selling the property, and otherwise harasses and annoys them in its possession and ownership. They therefore pray that the defendants may be required to set forth the grounds and nature of their claims and pretensions, that the court may determine each of them; and that it may be adjudged that they are unfounded in law and equity, and that the plaintiffs are the owners of the premises, and entitled to their possession, and may have a writ of assistance for the possession of such portions as may be found to be in the occupation of the defendants; and for such other and further relief as may be just. [71]

In their answer the defendants disclaim all interest in a portion of the premises, and deny that the plaintiffs have any estate in the residue. As to such residue, they admit that they claim an estate in fee simple therein, and aver that the defendant A. P. More is now, and his

grantors have been since 1843, the owners thereof in fee by virtue of a grant made April 28, 1840, by Alvarado, then Governor of the Department of California under the Mexican Government; that the grant was approved by the Departmental Assembly on the 26th of May, 1840; and that thereafter, on the 1st of April, 1843, Micheltorena, then Governor of the Department, ratified and confirmed the grant; and that, on the 17th and 18th of November, 1847, the grant was duly surveyed, and the grantee placed in possession by the first alcalde of the district, in presence of the neighboring proprietors, who consented to the lines thus established.

72]

The answer further alleges that the grant was adjudged to be valid, and confirmed, under the Act of Congress of March 3, 1851, "to ascertain and settle the private land claims in the State of California," 9 Stat. at L. 631; and that the defendant A. P. More, on the 4th of March, 1858, succeeded by proper conveyances to all the interests of the grantee in the premises, and still remains the owner thereof, except as to a portion not in dispute here, which he has alienated, and as to portions which are described as belonging to the other defendants, all of whom assert title to the parcels held by them under conveyances from him.

A replication being filed, proofs were taken, from which it appears that the plaintiffs claimed under a patent of the United States, issued to one Manuel Antonio Rodrigues de Poli, bearing date on the 24th of August, 1874. It is conceded that whatever title was acquired by Poli under the patent had passed by proper mesne conveyances to them. The patent recites the proceedings taken by Poli before the land commissioners under the Act of March 3, 1851; the filing of his petition in March, 1852, asking for the confirmation of his title to a tract of land known as the Mission of San Buenaventura, his claim being founded upon a sale made on the 8th of June, 1846, by the then Governor of the Department of California; the decree of confirmation rendered by the board of commissioners in May, 1855; the affirmation of said decree by the District Court of the United States for the Southern District of California, in April, 1861, to the extent of eleven square leagues, and by the Supreme Court of the United States, as shown by its mandate issued in December, 1868; and the subsequent depositing in the General Land Office of a plat of the survey of the claim confirmed, authenticated by the signature of the Surveyor-General of the United States for California, the descriptive notes and plat of the survey being set forth in full.

The land of which the plaintiffs claim to be the owners is embraced in this patent, and upon its efficacy in transferring the title they rely.

The defendants, as stated in their answer, claim under a grant made by Governor Alvarado to Manuel Jimeno on the 28th of April, 1840, which was confirmed under the Act of Congress of March 3, 1851, to ascertain and settle private land claims in California. It appeared in evidence—a fact not averred in the answer—that the claim thus confirmed was subsequently surveyed as required by that Act, and on the 22d of April, 1872, a patent of the United States therefor was issued to the claimants, Davidson and others, who had acquired by proper conveyances whatever rights Manuel Jimeno possessed under the grant. The defendants afterwards succeeded to the rights and title of these claimants.

The patent to Davidson and others recites the various proceedings taken by them for the confirmation of the claim to the land covered by the grant to Manuel Jimeno, issued by Governor Alvarado on the 28th of April, 1840, and approved in a subsequent instrument by Governor Micheltorena on the 1st of April, 1843, which two instruments are described as separate grants; the confirmation of the claim by the board of land commissioners on the 22d of May, 1855; and that, an appeal having been taken to the District Court of the United States for the Southern District of California, the Attorney-General of the United States gave notice that it was not the intention of the United States to prosecute it, and thereupon, at its December Term, 1857, it was dismissed by the court

The patent also recites the subsequent proceedings taken for the location and survey of the claim, by which it appears that two surveys were made, both of which were brought before the District Court of the United States under the Act of 1860, and that the one made under instructions of the United States Surveyor-General in December, 1860, and approved by him in February, 1861, was adopted by the court "as the correct and true location of the lands confirmed." The descriptive notes of the survey approved are set forth in the patent, with a plat of the lands. [74]

This patent does not embrace the premises to which adverse claims are asserted by the defendants. Their contention is that the grant, followed by the judicial possession given by the alcalde of the vicinity in 1847, vested in the grantee a perfect title to the lands within such judicial possession, which does embrace these lands; and that their right to such lands is not lost by reason of the fact that they are not included in the subsequent survey of the claim under the Act of 1851, and the patent of the United States. The court below held against their contention; and adjudged that the plaintiffs were owners in fee of the described premises, and that the adverse claims of the defendants to an estate or interest therein were unfounded in law or equity; and gave a decree, as prayed, for the plaintiffs. From this decree the defendants have appealed to this court.

Messrs. **George Flournoy** and **John B. Mhoon**, for appellants:

In the Act of 1851 the words "third persons" are those whose title accrued before the duty of the United States Government and its rights under the treaty attached.

Teschemacher v. *Thompson*, 18 Cal. 27; *Beard* v. *Federy*, 70 U. S. 3 Wall. 493 (18: 93); *Meader* v. *Norton*, 78 U. S. 11 Wall. 457 (20: 187).

It also appears from the face of the patent that it issued on a sale of mission lands made by Pico June 8, 1846; and no authority is shown in Pico to sell; and this court will take notice that said sale was void.

U. S. v. *Workman*, 68 U. S. 1 Wall. 745 (17: 705); *U. S.* v. *Jones*, Id. 766 (17: 712).

It also appears from the face of the patent

that it was founded on a Mexican title; and as appellants claim under a Mexican title, a patent from the United States is inadmissible as between such claimants.

U. S. v. *White*, 64 U. S. 23 How. 249 (16: 560).

If the sale to Jose Arnaz was void, the patent issued thereon is void.

Hunter v. *U. S.* 30 U. S. 5 Pet. 188 (8: 92).

The appellants' title to the land described in the answer was complete and perfect in all respects, prior to the cession of California to the United States.

Minturn v. *Brower*, 24 Cal. 645; *Schmitt* v. *Giovanari*, 48 Cal. 617; *Malarin* v. *U. S.* 68 U. S. 1 Wall. 282 (17: 594); *U. S.* v. *Castro*, 5 Sawy. 628; *Rancho Corte de Madera del Presidio*, Copp's Pub. Land Laws, 532.

Pablo de la Guerra had jurisdiction to make the survey.

Cohas v. *Raisin*, 8 Cal. 443; *White* v. *Moses*, 21 Cal. 34; *Merryman* v. *Bourne*, 76 U. S. 9 Wall. 602 (19: 686); *Palmer* v. *Low*, 2 Sawy. 250; *Pico* v. *U. S.* 1 Hoffm. L. C. 279.

The laws of a conquered or ceded country remain in force until altered by the new sovereign.

Mitchel v. *U. S.* 34 U. S. 9 Pet. 749 (9: 297).

If we have shown a perfect title from Mexico in Jimeno prior to the treaty of cession, the United States must protect it. The treaty of cession stipulated for such protection.

Beard v. *Federy*, 70 U. S. 3 Wall. 490 (18:92).

A United States patent on a Mexican grant is a quitclaim deed from the government, and does not enlarge or abridge pre-existing titles.

U. S. v. *Arredondo*, 31 U. S. 6 Pet. 736 (8: 564); *New Orleans* v. *De Armas*, 34 U. S. 9 Pet. 224 (9: 109); *Langdeau* v. *Hanes*, 88 U. S. 21 Wall. 521 (22: 606); *Nelson* v. *Moon*, 3 McLean, 319; Louisiana Survey Act, 1831, § 6, 4 U. S. Stat. at L. 492; Private Land Claims Act, § 13, 9 U. S. Stat. at L. 630.

The appellants are not estopped by a quitclaim deed under which they do not claim.

Bigelow, Estop. 274; *Kidder* v. *Blaisdell*, 45 Me. 461.

But if the Pico sale, upon which the De Poli patent issued, is valid, and the juridical survey of November, 1847, is void, the respondents are estopped from now objecting to the lines then established and agreed upon by Anguisola, in charge of the Mission.

California Code Civil Procedure, § 1963, subd. 15; *Stinson* v. *Hawkins*, 13 Fed. Rep. 833; *Stowe* v. *U. S.* 86 U. S. 19 Wall. 13 (22: 144); *Bronson* v. *Chappell*, 79 U. S. 12 Wall. 681 (20: 436); Bigelow, Estop. 3d ed. 525; *Spring* v. *Hewston*, 52 Cal. 442; *Carpentier* v. *Thirston*, 24 Cal. 281; *Alviso* v. *U. S.* 75 U. S. 8 Wall. 337 (19: 305); *Higuera* v. *U. S.* 72 U. S. 5 Wall. 827 (18: 469); *Fossat* v. *U. S.* 69 U. S. 2 Wall. 715 (17: 751).

Mr. **E. S. Pillsbury**, for appellees:

Can a grantee of an imperfect Mexican grant present his claim to the board of land commissioners, procure a decree of confirmation, a patent of the United States to be issued upon that survey, accept the said patent, and then, years afterwards, turn around and claim that the decree of confirmation, the final survey and the patent did not embrace all the land which he should have had under the grant, and thereupon claim, as against another patentee of the United States, the pretended excess alleged to have been excluded from the decree of confirmation, the final survey and the patent? It is impossible to answer this question more conclusively than by asking it. Its simple statement is the strongest argument that can be made in favor of the appellees. This question has been answered in the negative.

Cassidy v. *Carr*, 48 Cal. 339; *Boyle* v. *Hinds*, 2 Sawy. 527; *Minturn* v. *Brower*, 24 Cal. 664; *Teschemacher* v. *Thompson*, 18 Cal. 25, 26; *Leese* v. *Clark*, 20 Cal. 423, 424; *S. C.* 18 Cal. 571, 572; *U. S.* v. *Halleck*, 68 U. S. 1 Wall. 455, 456 (17: 668); *U. S.* v. *Billings*, 69 U. S. 2 Wall. 448 (17: 849); *Higuera* v. *U. S.* 72 U. S. 5 Wall. 827 (18: 469); *Beard* v. *Federy*, 70 U. S. 3 Wall. 489, 492, 493 (18: 91-93).

Beard v. *Federy*, is affirmed in *St. Louis Smelting & Ref. Co.* v. *Kemp*, 104 U. S. 641 (26: 876), a case which states, with great power, the conclusive effect to be attributed to patents of the United States.

See also *Moore* v. *Wilkinson*, 13 Cal. 478; *Boggs* v. *Merced Min. Co.* 14 Cal. 279; affirmed in *Steel* v. *St. Louis Smelting & Ref. Co.* 106 U. S. 454 (27: 229); *U. S.* v. *Sepulveda*, 68 U. S. 1 Wall. 104 (17: 569); *Manning* v. *San Jacinto Tin Co.* 9 Fed. Rep. 726; *Maxwell Land-Grant Case*, 121 U. S. 325 (30: 949); *S. C.* on rehearing, 122 U. S. 365 (30: 1211); *U. S.* v. *Hancock*, 30 Fed. Rep. 851.

The question as to whether the survey in fact conforms to the claim confirmed, or not, is one to be determined by the department, and not by the courts.

U. S. v. *Flint*, 4 Sawy. 61; *Beard* v. *Federy*, 70 U. S. 3 Wall. 492, 493 (18: 92, 93); *U. S.* v. *Sepulveda*, 68 U. S. 1 Wall. 108, 109 (17: 570).

The decision approving the survey was a judgment, and could only be reviewed in the same manner and under like proceedings as other judgments might be.

Manning v. *San Jacinto Tin Co.* 9 Fed. Rep. 734.

The authority and jurisdiction of Mexican officers in California are regarded as terminating on the 7th of July, 1846.

U. S. v. *Yorba*, 68 U. S. 1 Wall. 412, 423 (17: 635, 637); *Stearns* v. *U. S.* 73 U. S. 6 Wall. 589 (18: 843); *Hornsby* v. *U. S.* 77 U. S. 10 Wall. 239 (19: 904).

It is certain that no such authority existed after the overthrow of the Mexican Government.

Fremont v. *U. S.* 58 U. S. 17 How. 563 (15: 248).

Measurement and segregation from the public domain were official acts, and could only be made by the officers of the Mexican Government acting as such.

Boggs v. *Merced Min. Co.* 14 Cal. 279.

They were essential to complete investiture of title.

U. S. v. *Castro*, 5 Sawy. 628; *Malarin* v. *U. S.* 68 U. S. 1 Wall. 289 (17: 595).

The appellants voluntarily submitted to the jurisdiction of the tribunals appointed by the United States. This precludes them from now attacking that jurisdiction.

Cassidy v. *Carr*, 48 Cal. 339; *Boyle* v. *Hinds*, 2 Sawy. 527; *Minturn* v. *Brower*, 24 Cal. 664.

The phrase "third persons," in the Act of 1851, refers only to those who had perfect—and therefore paramount—titles under the Mexican Government, and who in no wise claimed under or were in privity with the United States.

Minturn v. *Brower*, 24 Cal. 668; *Leese* v. *Clark*, 18 Cal. 572; *De Arguello* v. *Greer*, 26 Cal. 616; *Beard* v. *Federy*, 70 U. S. 3 Wall. 493 (18: 93).

The doctrine as to the validity of the Land Department's acts, when it has jurisdiction, goes so far that if, in any circumstances, under existing law, a patent would be held valid, it will be presumed that such circumstance existed.

St. Louis Smelting & Ref. Co. v. *Kemp*, 104 U. S. 646 (26: 878).

In an action to determine adverse claims to real property in the State of California, possession is of no importance, since the adoption of the Codes in 1873.

People v. *Center*, 66 Cal. 551; *Pierce* v. *Felter*, 53 Cal. 18; *Stoddart* v. *Burge*, Id. 395.

This state statute, as so construed by the highest state court, will be enforced in the federal courts.

Holland v. *Challen*, 110 U. S. 15 (28: 52); *Reynolds* v. *Crawfordsville First Nat. Bank*, 112 U. S. 411 (28: 736); *Chapman* v. *Brewer*, 114 U. S. 171 (29: 88).

The commissioners had jurisdiction to determine what land was embraced in De Poli's claim.

Steinback v. *Perkins*, 58 Cal. 86, 88.

The patent is conclusive.

Gallagher v. *Riley*, 49 Cal. 473; *De Arguello* v. *Greer*, 26 Cal. 616; *De Bernal* v. *Lynch*, 36 Cal. 135; *Shartzer* v. *Love*, 40 Cal. 93; *Greer* v. *Mezes*, 65 U. S. 24 How. 268 (16: 661); *Carey* v. *Brown*, 58 Cal. 180; *Chipley* v. *Farris*, 45 Cal. 538, 539; *San Diego* v. *Allison*, 46 Cal. 162; *Reed* v. *Ybarra*, 50 Cal. 465.

Mr. Justice **Field** delivered the opinion of the court:

The question presented for determination in this case relates to the effect of proceedings taken under the Act of March 3, 1851, to ascertain and settle private land claims in California, upon the claims of parties holding concessions of lands in that State under the Spanish or the Mexican Government. By the cession of California to the United States, the rights of the inhabitants to their property were not affected. They remained as before. Political jurisdiction and sovereignty over the territory and public property alone passed to the United States. *U. S.* v. *Percheman*, 32 U. S. 7 Pet. 51, 87 [8: 604, 617]. Previous to the cession numerous grants of land in California had been made by the Spanish and Mexican Governments to private parties. Some of these were of tracts with defined boundaries; some were for specific quantities of land to be selected from areas containing a much larger quantity; and others were of lands known only by particular names, without any designated boundaries. To ascertain what rights had thus passed, and to carry out the obligation which the Government of the United States had assumed, to protect all rights of property of those who remained citizens of the country, Congress passed the Act of March 3, 1851. By it a board of commissioners was created, to which all persons claiming land by virtue of any right or title derived from the Mexican or Spanish Governments could present their claims and have them examined and their validity determined; and the claimants could appear by counsel and produce documentary evidence and witnesses in support of their claims. The Act required all persons thus claiming lands in California to present their claims to the board within two years from its date, and declared in substance that if, upon examination, they were found by the board, and by the courts of the United States to which an appeal was allowed, to be valid, the claims should be confirmed and surveyed, and patents issued therefor to the claimants. But the Act also declared that all lands the claims to which were not presented to the board within that period should be considered as part of the public domain of the United States. In *Beard* v. *Federy*, 70 U. S. 3 Wall. 490 [18: 92], this court, whilst stating that it was unnecessary to express any opinion as to the validity of the legislation in respect to perfect titles acquired under the former government, held that it was not subject to any constitutional objection so far as it applied to grants of an imperfect character, which required further action of the political department to render them perfect. The grant to Manuel Jimeno, under which the defendants claim, was one of an imperfect character. Upon the cession of the country there remained a further proceeding to be had with respect to that grant before an indefeasible title could vest in the grantee. A formal transfer of the property to the grantee by officers of the government was necessary. The proceeding was termed a judicial delivery of possession. Until it was had the grant was an imperfect one. As preliminary to, or as a part of, the official delivery, the boundaries of the land were to be established, after summoning the neighboring proprietors as witnesses to the proceeding. *Malarin* v. *U. S.* 68 U. S. 1 Wall. 282, 289 [17: 594, 595]. No such official delivery of possession was had under the former government to the grantee, Jimeno, though the grant to him contains these conditions: "He shall petition the proper judge to be put in judicial possession by him in virtue of this document, by whom the boundaries shall be marked out, on the limits of which he shall place the proper landmarks. The land now granted is of the extent of four square leagues, more or less, as shown by the map which accompanies the espediente. The judge who shall give him possession shall have it measured in conformity with the evidence, the surplus that results remaining in the Nation for its proper use."

The authority and jurisdiction of Mexican officials terminated on the 7th of July, 1846. On that day the forces of the United States took possession of Monterey, the capital of California, and soon afterwards occupied the principal portions of the country; and the military occupation continued until after the treaty of peace. The political department of the government designated that day as the period when the conquest of California was complete and the authority of the officials of Mexico ceased. In this matter the judiciary follows the political depart-

[79] [80]

ment. *U. S* v. *Yorba*, 68 U. S. 1 Wall. 412, 423 [17:635, 637]; *U. S.* v. *Pico*, 64 U. S. 23 How. 321, 326 [16: 464, 466]; *Hornsby* v. *U. S.* 77 U. S. 10 Wall. 224, 239 [19:900, 904]. After that date no alcaldes elected by the citizens had any jurisdiction to deliver judicial possession. This was distinctly held in the case of *Fremont* v. *United States*, 58 U. S. 17 How. 542, 563 [15: 241, 248]. In answer to the objection there taken, that there was no survey or judicial possession of the land granted to Alvarado, under whom Fremont claimed, the court said: "The alcalde had no right to survey the land or deliver judicial possession, except by the permission of the American authorities. He could do nothing that would in any degree affect the rights of the United States to the public property; and the United States could not justly claim the forfeiture of the land for a breach of these conditions, without showing that there were officers in California, under the military government, who were authorized by a law of Congress to make this survey and deliver judicial possession to the grantee. It is certain that no such authority existed after the overthrow of the Mexican Government."

[81] The doctrine invoked by the defendants, that the laws of a conquered or ceded country, except so far as they may affect the political institutions of the new sovereign, remain in force after the conquest or cession until changed by him, does not aid their defense. That doctrine has no application to laws authorizing the alienation of any portions of the public domain, or to officers charged under the former government with that power. No proceedings affecting the rights of the new sovereign over public property can be taken except in pursuance of his authority on the subject. The cases in the Supreme Court of California and in this court, which recognize as valid grants of lots in the pueblo or city of San Francisco by alcaldes appointed or elected after the occupation of the country by the forces of the United States, do not militate against this view. Those officers were agents of the pueblo or city, and acted under its authority in the distribution of its municipal lands. They did not assume to alienate or affect the title to lands which was in the United States. *Welch* v *Sullivan*, 8 Cal. 165; *White* v. *Moses*, 21 Cal. 34; *Merryman* v *Bourne*, 76 U. S. 9 Wall. 592 [19:683].

It follows from what is thus said that it would be a sufficient answer to the contention of the defendants, that the grant under which they claim to have acquired a perfect title conferred none. The grantees were not invested with such title, and could not be without an official delivery of possession under the Mexican Government; and such delivery was not had, and could not be had after the cession of the country, except by American authorities acting under a law of Congress. But independently of this consideration, and assuming that the title under the grant was perfect, the obligation of the grantee was none the less to present his claim to the board of land commissioners for examination. The ascertainment of existing claims was a matter of vital importance to the government in the execution of its policy respecting the public lands; and Congress might well declare that a failure to present a claim should be deemed an abandonment of it, and that the lands covered by it should be considered a part of the public domain. Certain it is that a claimant presenting his claim to the board for [82] examination and confirmation, in order that he might subsequently acquire a patent from the government, is bound by the adjudication of the board. After submitting his claim to its examination and judgment, he cannot afterwards be heard to say that in adjudicating upon his title the board erred, or that the Land Department in determining the boundaries of his claim erred, in order that he may claim, outside of the survey and patent, other lands which he considers covered by his grant. He cannot repudiate a jurisdiction to which he has appealed; and the estoppel extends to parties claiming under him. *Boyle* v. *Hinds*, 2 Sawy. 527; *Cassidy* v. *Carr*, 48 Cal. 339.

In determining claims under Mexican grants the board of land commissioners was required, by the Act under which it was created, to be governed by the Treaty of Guadalupe Hidalgo; the law of nations; the laws, usages and customs of the government from which the claim was derived; the principles of equity; and the decisions of the Supreme Court of the United States, so far as they were applicable. And in *United States* v. *Fossatt*, 62 U. S. 21 How. 445, 449 [16: 186, 187], this court, in considering what was involved in the inquiry into the validity of a claim to land under that Act, said: "It is obvious that the answer to this question must depend, in a great measure, upon the state and condition of the evidence. It may present questions of the genuineness and authenticity of the title, and whether the evidence is forged or fraudulent; or, it may involve an inquiry into the authority of the officer to make a grant, or whether he was in the exercise of the faculties of his office when it was made; or, it may disclose questions of the capacity of the grantee to take, or whether the claim has been abandoned or is a subsisting title, or has been forfeited for a breach of conditions. Questions of each kind here mentioned have been considered by the court in cases arising under this law. But, in addition to these questions upon the vitality of the title, there may arise questions of extent, quantity, location, boundary, and legal operation, that are equally essential in determining the validity of the claim. In affirming a claim to land under a Spanish or Mexican grant to be [83] valid within the law of nations, the stipulations of the Treaty of Guadalupe Hidalgo, and the usages of those governments, we imply something more than that certain papers are genuine, legal and translative of property. We affirm that the ownership and possession of land of definite boundaries rightfully attach to the grantee."

Trust relations respecting the property between the patentee and others may be enforced equally with such relations between him and others respecting any other property; but until the patent is set aside or modified by proceedings taken at the instance of the government, all the questions necessarily involved in the determination of a claim to land under a Spanish or Mexican grant, and in establishing its boundaries, are concluded by it in all courts and proceedings, except as against parties claiming by superior title, such as would enable them to

resist successfully any action of the government in disposing of the property. The confirmation takes effect, by relation, as of the date of the first proceeding commenced before the land commissioners; and an adjudication that at that date it was valid is also an adjudication that it was valid at the date it was made. And the patent which follows the confirmation and approved survey, and is a matter of record, is itself evidence of the regularity of preliminary proceedings. As was said in *Beard* v. *Federy*, 70 U. S. 3 Wall. 478, 492 [18: 88, 92], "by it the government declares that the claim asserted was valid under the laws of Mexico; that it was entitled to recognition and protection by the stipulations of the treaty, and might have been located under the former government, and is correctly located now, so as to embrace the premises as they are surveyed and described. As against the government this record, so long as it remains unvacated, is conclusive. And it is equally conclusive against parties claiming under the government by title subsequent. It is in this effect of the patent as a record of the government that its security and protection chiefly lie."

It remains to consider two other positions taken by the appellants: first, that the sale to Poli of the ex-mission of San Buenaventura [84] was illegal and void, and hence that no title passed to the patentee on its confirmation; second, the want of any allegation in the complaint, or any evidence in the proofs, that the plaintiffs were in possession of the premises when this suit was commenced. In support of the first position the appellants cite *United States* v. *Workman*, 68 U. S. 1 Wall. 745 [17: 705]. In that case it was held that the Departmental Assembly of California had no power to authorize the governor to alienate any public lands of the department, and that its own power was restricted to that conferred by the laws of colonization, which was simply to approve or disapprove of the grants made by the Governor under those laws. But it does not follow that there were not exceptional circumstances with reference to the sale to Poli, which authorized the Governor to make it. We are bound to suppose that such was the case, in the absence of any evidence to the contrary, from the fact that the validity of his claim under it was confirmed by the board of land commissioners, by the District Court of the United States, and by this court on appeal. The question of its validity was thereby forever closed, except as against those who might be able to show a prior and better title to the premises. The defendants show no title whatever; but, on the contrary, the grant under which they assert title has been, by the adjudication of the board of land commissioners and by the survey and patent, confined to other land. Second, as to the want of any allegation in the complaint of possession by the plaintiffs, or any evidence of that fact in the proofs, it is sufficient to say that, by section 738 of the Code of Civil Procedure of California, a plaintiff asserting title to lands, though out of possession, may maintain an action to determine an adverse claim, estate, or interest in the premises. *People* v. *Center*, 66 Cal. 551. A statute of Nebraska, authorizing a similar suit by a plaintiff out of possession, was before this court for consideration in *Holland* v. *Challen*, 110 U. S. 15 [28: 52], and the jurisdiction of a court of equity to grant the relief prayed in such case was sustained. See also *Reynolds* v. *Crawfordsville First Nat. Bank*, 112 U. S. 405, 411 [28: 733, 736]; *Chapman* v. *Brewer*, 114 U. S. 158, 170, 171 [29: 83, 87, 88]; *U. S.* v. *Wilson*, 118 U. S. 86, 89 [30: 110, 112]; *Frost* v. *Spitley*, [85] 121 U. S. 552, 557 [30: 1010, 1012].

We see no error in the decree of the court below, and it is accordingly affirmed.

DAYTON S. MORGAN ET AL., *Plfs. in Err* [63]
v.
FREDERICK EGGERS.

(See S. C. Reporter's ed. 63-67.)

Ejectment—finding for part of premises—insufficient description—judgment.

1. In ejectment, where the order of the court indicates a general finding for the plaintiff only as to a part of the land in controversy, which part is described in the order, a judgment is proper for the recovery only of the possession of the premises so described, if the plaintiffs fail to show title to the remaining part of the premises in dispute.

2. Where there was no special finding of facts bearing upon the question of title, this court will assume that the evidence authorized the finding as to the particular premises awarded to the plaintiffs; and they cannot complain that judgment was not rendered in their favor for the part not shown to belong to them.

3. If the description in the judgment, of the land recovered, was not sufficiently full or accurate, it was in the power of the plaintiffs at the time the finding was made, or during the same term, to procure such a reformation of the judgment as would have been proper.

4. Where the finding was in fact and in legal effect for only a part of the premises in dispute, and where, from the record, the court is bound to assume that that part is embraced in the description given in the complaint, the judgment for that part will be affirmed.

[No. 200.]

Argued April 2, 1888. Decided April 16, 1888.

IN ERROR to the Circuit Court of the United States for the District of Indiana, to review a judgment in ejectment for the plaintiffs. *Affirmed.*

Statement by *Mr. Justice* **Harlan:**

This is an action of ejectment. The complaint, framed in accordance with the local law, described the premises sought to be recovered as follows: "All of the north part of lot two, in section thirty-six, township thirty-eight north of range ten west of the second principal meridian, which lies west of the track of the Lake Shore & Michigan Southern Railroad, and north of a line parallel with the north line of said lot two, and seven hundred and fifty-three feet south therefrom." The answer contains a denial of each allegation in the complaint.

On the 20th of January, 1883, during the [64] November Term of the court below, the following proceedings were had:

"Come the parties by counsel, and by agreement this cause is submitted to the court for trial; and the court, having heard the evidence and being fully advised, finds for the plaintiffs, and orders and adjudges that they are entitled to and shall have and recover of defendant the

possession of so much of said lot two as lies south of the south line of lot number one, as indicated by a fence constructed and maintained by the defendant as and on said south line,—said fence running from the state line easterly to Lake Michigan,—and assess the damages at $1.00 and costs, taxed at $——, which the plaintiffs shall recover of defendant.

"All of which is finally ordered, adjudged, and decreed."

During the same term, February 5, 1883, the plaintiffs moved that the decision and finding be set aside and annulled, and a new trial granted, for the following reasons: 1. They were contrary to the law and the evidence. 2. The plaintiffs were surprised by a case falsely made by the defendant at the trial, which they had no reason to expect, and therefore did not come prepared to answer at the trial, namely, by his claim, supported only by the testimony of his son, that Jacob Forsyth and the surveyor, Wait, pointed out and agreed upon the line occupied by the fence of defendant mentioned in said decision as the true line of said Egger's land; by his claim, supported by his testimony alone, that George W. Clarke agreed with him that the line occupied by said fence was the line between his and said Clarke's land; by his claim, supported by his own testimony and that of his son only, that a fence had been maintained on the line occupied by the fence, in said decision mentioned, for more than twenty years last past; and by his claim, supported by the testimony of his son only, that for twenty years past he had occupied all the land as far south as said fence. 3. The court admitted evidence for the defendant against the objection of plaintiffs, and the decision of the court was based on such irrelevant evidence.

On the 6th of March, 1883, the following order was made: "Came the parties by coun-
[65] sel, and the court, being fully advised, now overrules plaintiffs' motion for a new trial; to which plaintiffs except, and the court allows plaintiffs thirty days in which to file bill of exceptions." No bill of exceptions, showing what occurred at the trial, was filed.

On the 23d of April, 1884, the plaintiffs moved the court, upon written grounds filed, to amend and reform the judgment of January 20, 1883, so that it "shall conform to the complaint in said cause, and to the finding or verdict of the court rendered upon the trial in said cause."

At a subsequent term of the court, June 27, 1884, the motion to amend and reform the judgment of the court was overruled. To that ruling the plaintiffs excepted, and took a bill of exceptions embodying only the motion to amend and reform the judgment, the order overruling that motion, and the opinion of the court thereon. The court, among other things, said: "It was competent for the court, under the issue, to find to what extent the defendant was guilty, or had held unlawful possession of the premises described; and if, under the evidence, it appeared that a fence had become or was the boundary of such occupation, it was proper that the fact should be stated in the finding and judgment of the court. The finding and judgment in this instance are not separate and distinct, as perhaps it would have been better to have had them. The meaning, however, is clear. It is as if the entry read in this way: And the court, having heard the evidence, etc., finds and orders and adjudges that the plaintiffs are entitled to, and shall have and recover of the defendants, etc."

The errors assigned upon the record are that the judgment does not pursue the issue and finding thereon rendered and entered of record as the law directs and requires, and that the court erred in refusing to amend and reform the judgment.

Mr. **Edward Roby**, for plaintiffs in error:

The federal statutes on practice of the circuit courts are binding on the federal courts, and cannot be disregarded.

Louisiana Mut. Ins. Co. v. *Tweed*, 74 U. S. 7 Wall. 44, 51 (19: 65, 66).

Lawful authority to act in lieu of the jury must be presumed when it appears that the jury was waived.

Grignon v. *Astor*, 43 U. S. 2 How. 319 (11. 283); *Tilton* v. *Cofield*, 93 U. S. 165 (23:858).

But if the error appears on the face of the record, the judgment entered will be reversed.

Guild v. *Frontin*, 59 U. S. 18 How. 135 (15: 290).

Notwithstanding there is no submission in writing, this court may, according to the course of the common law, review the record on writ of error, and determine whether the judgment pursues the finding.

Bond v. *Dustin*, 112 U. S. 606–609 (28:836, 837); *Campbell* v. *Boyreau*, 62 U. S. 21 How. 223, 226 (16:96); *Flanders* v. *Tweed*, 76 U. S. 9 Wall. 425 (19:678); *Paine* v. *Central Vermont R. R. Co.* 118 U. S. 158 (30:195); *Allen* v. *St. Louis Bank*, 120 U. S. 30 (30:575); *Alexandria Canal Co.* v. *Swann*, 46 U. S. 5 How. 83 (12:60); *York & C. R. R. Co.* v. *Myers*, 59 U. S. 18 How 246, 252 (15:880, 882).

A finding by the court not made at the request of either or any of the parties is not a special finding.

Northcutt v. *Buckles*, 60 Ind. 577, 579; *Caress* v. *Foster*, 62 Ind. 145, 153, 154.

Where the Circuit Court of the United States adopts the process pointed out by a state law, there must be no essential variance.

McCracken v. *Hayward*, 43 U. S. 2 How. 608 (11:397).

The forms and effects of findings and verdicts are as prescribed by the local law.

Pensacola Ice Co. v. *Perry*, 120 U. S. 318 (30: 663).

At common law the verdict was always plainly entered, as in Rastell's Entries, 253; Coke's Entries, 184–216; Runnington, Eject. 232, 233, 478, 479, 510; Co. Litt. 227, *a, b;* Aston's Entries, 308; Harris's Entries, 341, 356; Mallory's Entries, 43, 44; Lilly's Entries, 513; 4 Co. Inst. 87.

Judgment can be given only on what has gone before in the record.

Co. Litt. 39, *a;* Cunningham, Law Dict. title *Judgment;* Tomlin, Law Dict. title *Judgment and Record.*

Record is a memorial of the proceedings and acts of a court of justice.

Co. Inst. 260, *a;* 1 Bl. Com. 69; 3 Bl. Com. 24.

What the law requires to be done and to appear of record can only be done and made to appear by the record itself, or an exemplification of the record.

Elliott v. *Peirsol*, 26 U. S. 1 Pet. 340 (7:170).

A verdict is simply the answer of a jury to the court on the issues of fact committed to their examination; a judgment is the conclusion that flows from the law and the verdict.

Stennett v. *Scott*, 7 Ark. 281.

Whether the case is tried by a jury, or, by consent of the parties, the judge is substituted for the jury, the finding is a verdict, to be recorded as such, and to have the same force and effect in either case; and the record will be examined and tried in this court according to the rules of the common law.

Upon records like the one before us these rules have been applied, both before—*Mercantile Mut. Ins. Co.* v. *Folsom*, 85 U. S. 18 Wall. 237-254 (21: 827-835)—and since the statutes authorizing exceptions to be saved to the rulings of the judge during the trial where a jury is waived.

Craig v. *Missouri*, 29 U. S. 4 Pet. 410 (7:903); *Weems* v. *George*, 54 U. S. 13 How. 190 (14:108); *Graham* v. *Bayne*, 59 U. S. 18 How. 60 (15:265); *Guild* v. *Frontin*, Id. 135 (15:290); *Louisiana Mut. Ins. Co.* v. *Tweed*, 74 U. S. 7 Wall. 44 (19: 65); *Bassett* v. *U. S.* 76 U. S. 9 Wall. 38 (19:548); *Norris* v. *Jackson*, Id. 125 (19:608); *Copelin* v. *Phœnix Ins. Co.* Id. 461 (19:739); *Coddington* v. *Richardson*, 77 U. S. 10 Wall. 516 (19:981); *Generes* v. *Campbell*, 78 U. S. 11 Wall. 193 (20: 110); *Miller* v. *Brooklyn L. Ins. Co.* 79 U. S. 12 Wall. 285 (20:398); *Dirst* v. *Morris*, 81 U. S. 14 Wall. 484 (20:722); *Richmond* v. *Smith*, 82 U. S. 15 Wall. 429 (21:200); *Dickinson* v. *Planters Bank*, 83 U. S. 16 Wall. 250 (21:278); *Mercantile Mut. Ins. Co.* v. *Folsom*, 85 U. S. 18 Wall. 237 (21:827); *Ohio* v. *Marcy*, Id. 552 (21:813); *Springfield F. & M. Ins. Co.* v. *Sea*, 88 U. S. 21 Wall. 158 (22:511); *Ætna Ins. Co.* v. *Boon*, 95 U. S. 117 (24:395); *Boogher* v. *New York L. Ins. Co.* 103 U. S. 90 (26:310); *U. S.* v. *Harris*, 106 U. S. 634 (27:292); *Bond* v. *Dustin*, 112 U. S. 604 (28: 835); *Martinton* v. *Fairbanks*, Id. 670 (28:862); *Allen* v. *St. Louis Bank*, 120 U. S. 30 (30:575).

The court must enter a judgment on the verdict, or set it aside and grant a new trial.

Mitchell v. *Geisendorff*, 44 Ind. 360.

Judgment cannot be entered until the verdict or decision upon the issue has been pronounced and recorded.

Gilbert, Eject. 92-114; Runnington, Eject. 401; Adams, Eject. 328; Tyler, Eject. 582; 3 Bl. Com. 395; 3 Chitty, Bl. App. 12.

The making up of the judgment, and writing the same out upon the record, are both acts of the clerk, and never the act of the court.

Gilbert, Eject. 92; Vin. Abr. title *Amendment* (I), 16, 22; Bac. Abr. title *Amendment and Jeofails*; *Mason* v. *Fox*, Cro. Jac. 632; *Usher* v. *Dansey*, 4 Maule & S. 94; *Rees* v. *Morgan*, 3 T. R. 349; *Short* v. *Coffin*, 5 Burr. 2730; *Bank of Kentucky* v. *Wister*, 27 U. S. 2 Pet. 318 (7:437); *S. C.* 28 U. S. 3 Pet. 431 (7:731); *Woodward* v. *Brown*, 38 U. S. 13 Pet. 1 (10:31); *Stockton* v. *Bishop*, 45 U. S. 4 How. 155, 168 (11:918, 923); *Fite* v. *Doe*, 1 Blackf. 127; *Smith* v. *Myers*, 5 Blackf. 223; *McManus* v. *Richardson*, 8 Blackf. 100; *Miller* v. *Royce*, 60 Ind. 189; *State* v. *Cross*, 6 Ind. 387; *Sherman* v. *Nixon*, 37 Ind. 154; *Jenkins* v. *Long*, 23 Ind. 460; *Bales* v. *Brown*, 57 Ind. 282; *Latta* v. *Griffith*, Id. 329; *Silner* v. *Butterfield*, 2 Ind. 24.

In courts of the United States the distinction between cases at law and in equity is rigidly preserved.

Const. art. 3, § 2; Amendment VII.; Rev. Stat. §§ 753, 648, 914, 861, 862; *U. S.* v. *Wilson*, 118 U. S. 86 (30:110); *McConihay* v. *Wright*, 121 U. S. 201 (30:932); *Basey* v. *Gallagher*, 87 U. S. 20 Wall. 670 (22:452); *Thompson* v. *Central Ohio R. R. Co.* 73 U. S. 6 Wall. 134 (18:765); *Bennett* v. *Butterworth*, 52 U. S. 11 How. 669 (13:859); *Northern Pac. R. R. Co.* v. *Paine*, 119 U. S. 561 (30:513).

A record can only be tried by itself, by bare inspection.

Com. Dig. title *Record*, B, E, F.; Co. Litt. 117 *b*, 260; *Croswell* v. *Byrnes*, 9 Johns. 287; *Young* v. *Thompson*, 14 Ill. 380, 381; 3 Bl. Com. 24; *Waldron* v. *Green*, 4 Wend. 409; *Re Negus*, 10 Wend. 40; *McKnight* v. *Dunlap*, 4 Barb. 36.

Where *mandamus* is the proper remedy, error will not lie.

Knickerbocker Ins. Co. v. *Comstock*, 83 U. S. 16 Wall. 258 (21:493).

This court has decided that, on this record, the remedy is by writ of error.

Ex parte Morgan, 114 U. S. 174 (29:135).

There was no averment of damages in the declaration; no issue on their amount.

Mansur v. *Streight*, 1 West. Rep. 299, 103 Ind. 358; *Larned* v. *Hudson*, 57 N. Y. 151; *Harrison* v. *Nixon*, 34 U. S. 9 Pet. 503 (9:208); *Graham* v. *Bayne*, 59 U. S. 18 How. 61, 62 (15: 266).

The claim for mesne profits, and for damages for withholding possession, are separate and distinct causes of action which must be pleaded if any recovery therefor is desired.

Larned v. *Hudson*, and *Mansur* v. *Streight*, *supra*.

The insertion, in the judgment, of the words "as indicated by a fence constructed," etc., was improper.

Applegate v. *Doe*, 2 Ind. 169, 170; *Voltz* v. *Newbert*, 17 Ind. 190, 191; *Doe* v. *Hall*, 2 Ind. 24; *Farrow* v. *Farrow*, 2 J. J. Marsh. 388; *Simpson* v. *Shannon*, 5 Litt. 324; *Doe* v. *Wilson*, 2 Starkie, 477; *Cottingham* v. *King*, 1 Burr. 623; *Connor* v. *West*, 5 Burr. 2672.

In this case the judgment only requires to be amended, according to certain and long established principles.

Woodward v. *Brown*, 38 U. S. 13 Pet. 1, 2 (10: 31); *Bank of Kentucky* v. *Ashley*, 27 U. S. 2 Pet. 327 (7:440); *Miller* v. *Royce*, 60 Ind. 189; *State* v. *Cross*, 6 Ind. 387; *Sherman* v. *Nixon*, 37 Ind. 154; 3 Bl. Com. 407-410; *Smith* v. *Fuller*, 2 Strange, 786; *Flindell* v. *Fairman*, 11 Price, 410, 411.

The court had nothing to do with the location of the boundary.

Tongue v. *Nutwell*, 17 Md. 228, 229; *Farrow* v. *Farrow*, 2 J. J. Marsh. 388; *Games* v. *Stiles*, 39 U. S. 14 Pet. 333 (10:481).

The verdict must respond to the issue joined, between the parties to the action.

Patterson v. *U. S.* 15 U. S. 2 Wheat. 221 (4: 224); *Garland* v. *Davis*, 45 U. S. 4 How. 131 (11:907); *Middleton* v. *Quigley*, 12 N. J. L. 352; *Holmes* v. *Wood*, 6 Mass. 1; *Kilbourn* v. *Waterous*, Kirby (Conn.), 424; *Fenwick* v. *Logan*, 1 Mo. 401; *Moody* v. *Keener*, 7 Port. (Ala.) 218; *Sawyer* v. *Fitts*, 4 Stew. & P. 365; *Vines* v. *Brownrigg*, 2 Dev. L. 537.

A verdict which is recorded for part of the

land sued for, and which says nothing as to the rest, is void. Twice adjudged.

Co.Litt. 227, *a*; *Wise* v. *Hine*, 1 Greene (Iowa), 62; *Auncelme* v. *Auncelme*, Cro. Jac. 81; Com. Dig. title *Pleader* (S) 19; *Miller* v. *Trets*, 1 Ld. Raym. 324; *Rex* v. *Hayes*, 2 Ld. Raym. 1518; *Wood* v. *McGuire*, 17 Ga. 361; *Patterson* v. *U. S.* 15 U. S. 2 Wheat. 225 (4:225); *Prentice* v. *Zane*, 49 U. S. 8 How. 484 (12:1166); *Graham* v. *Bayne*, 59 U. S. 18 How. 60 (15:265); *Ex parte French*, 91 U. S. 423 (23:249); *Fort Scott* v. *Hickman*, 112 U. S. 150, 165 (28: 636, 641); *Graves* v. *Morley*, 3 Lev. 55.

A general verdict for the plaintiff entitles him to judgment for the entire premises.

McKee v. *Wilson*, 87 N. C. 300; *Burkle* v. *Ingham Circuit Judge*, 42 Mich. 513; *Chapman* v. *Holding*, 60 Ala. 522; *Farrow* v. *Farrow*, 2 J. J. Marsh. 388; *Buckley* v. *Cunningham*, 4 Bibb, 285; *Hamner* v. *Eddins*, 3 Stew. (Ala.) 192, 197; *Kershner* v. *Kershner*, 36 Md. 335, 336; *Betz* v. *Mullin*, 62 Ala. 365; *Cannon* v. *Davies*, 33 Ark. 56.

Indiana reports are full of such amendments *nunc pro tunc*.

Jenkins v. *Long*, 23 Ind. 460; *Bales* v. *Brown*, 57 Ind. 282; *Latta* v. *Griffith*, Id. 329; *Burson* v. *Blair*, 12 Ind. 371; *Silner* v. *Butterfield*, 2 Ind. 24; *Fite* v. *Doe*, 1 Blackf. 127; *Smith* v. *Myers*, 5 Blackf. 223; *McManus* v. *Richardson*, 8 Blackf. 100.

Messrs. A. C. Harris and **Wm. H. Calkins** for defendant in error:

A judgment will not be reversed because of the use of untechnical or improper words.

Lyles v. *McClure*, 1 Bail. L. (S. C.) 7; *Minkhart* v. *Hankler*, 19 Ill. 47; Freem. Judg. 1st ed. §§ 47, 50, 51.

A new trial of right being a statutory remedy, the right granted is no broader than the statute.

Butler University v. *Conard*, 94 Ind. 353.

Under the general issue it was not necessary to prove the defendant's possession. The answer admitted this.

Carver v. *Carver*, 97 Ind. 519.

It is too late to attack the judgment now.

Buell v. *Shuman*, 28 Ind. 464; *Rardin* v. *Walpole*, 38 Ind. 146, 150; *Smith* v. *Dodds*, 35 Ind. 452; *Leary* v. *State*, 39 Ind. 360; *Brick* v. *Scott*, 47 Ind. 299, 300.

The motion to correct the judgment was clearly an afterthought and is unsupported by any practice.

Lake Erie & W. R. Co. v. *Acres*, 7 West. Rep. 88, 108 Ind. 548; *Henry* v. *Stevens*, Id. 281 (6 West. Rep. 577; *First Nat. Bank* v. *Root*, 5 West. Rep. 286, 107 Ind. 224, 228; *Louisville, N. A. & C. R. Co.* v. *Schmidt*, 3 West. Rep. 648, 106 Ind. 73; *Leeds* v. *Richmond*, 102 Ind. 372; *Holderman* v. *Miller*, Id. 356; *Over* v. *Schiffling*, Id. 191; *Breymerman* v. *Jennings*, 101 Ind. 253; *Logansport* v. *Uhl*, 99 Ind. 531; *Cottrell* v. *Ætna L. Ins. Co.* 97 Ind. 311; *Western Union Tel. Co.* v. *Reed*, 96 Ind. 195; *Mescall* v. *Tully*, 91 Ind. 96.

Twenty years a bar.

Bowen v. *Preston*, 48 Ind. 367; *Vanduyn* v. *Hepner*, 45 Ind. 596; *Wright* v. *Tichenor*, 2 West. Rep. 209, 104 Ind. 185; *State* v. *Portsmouth Sav. Bank*, 4 West. Rep. 526, 106 Ind. 436.

The plaintiff suing for the possession of real estate may recover for any part of it or interest therein, whether a divided or undivided interest.

Carver v. *Carver*, 97 Ind. 497-505; *Steeple* v. *Downing*, 60 Ind. 478-503; *Parker* v. *Small*, 58 Ind. 349; *Clements* v. *Robinson*, 54 Ind. 599.

Mr. Justice **Harlan** delivered the opinion of the court:

More than a year elapsed after the refusal of [66] the court to grant a new trial before the motion to amend and reform the judgment was made. If the court had authority to entertain that motion after the expiration of the term at which the judgment was entered, it was properly denied. By the local statute applicable to the case the plaintiffs were entitled to recover against the defendants, or either of them, the whole of the premises in controversy, or any part thereof, or any interest therein, according to the rights of the parties. Rev. Stat. Ind. 1881, § 1060; Rev. Stat. U. S. § 914. The plaintiffs contend that there was, in effect, a general finding for them, as to all the land in dispute, and that the judgment should have been in their favor for the whole of the premises described in the complaint. But the record, fairly interpreted, does not show any such finding. The order of January 20, 1883, embraces both a finding and a judgment. But they are not, for that reason, nullities. *O'Reilly* v. *Campbell*, 116 U. S. 418, 420 [29:669]. That order plainly indicates a general finding for the plaintiffs only as to a part of the land in controversy; that is, as to the part described in the order. The judgment is for the recovery only of the possession of the premises so described. Such a judgment was proper if the plaintiffs failed to show title to the remaining part of the premises in dispute. As there was no special finding of facts bearing upon the question of title, we must assume that the evidence authorized the finding as to the particular premises awarded to the plaintiffs. They cannot complain that judgment was not rendered in their favor for the part not shown to belong to them.

It was said in argument that the judgment was for land not embraced in the description given in the complaint; that the plaintiffs got a judgment for land not sued for. But this cannot be made to distinctly appear from a comparison of the description in the complaint, with the description in the judgment, of the premises recovered.

If the description in the judgment, of the land recovered, was not sufficiently full or accurate, it was in the power of the plaintiffs, at the time the finding was made, or during the same term, to procure such a reformation of [67] the judgment as would have been proper. Instead of pursuing that course, they preferred to claim—contrary to what, it seems to us, was the manifest purpose of the court—that there was a general finding, without qualification, in their behalf, which should have been followed by a judgment for the whole land. As, however, the finding was, in fact and legal effect, for only a part of the premises in dispute, and as we are bound to assume, from the record, that that part is embraced in the description given in the complaint, *the judgment must be affirmed. It is so ordered.*

[59] SARAH C. ROBARDS, *Plff. in Err.*,
v.
ALFRED W. LAMB.

(See S. C. Reporter's ed. 58-62.)

Missouri statute—special administrator—notice of settlement—constitutionality of statute.

1. The statute of Missouri which authorizes a special administrator, who has charge of the estate of a testator pending a contest as to the validity of his will, to have a final settlement of his accounts without giving notice to distributees, which settlement in the absence of fraud is deemed conclusive as against such distributees, is not repugnant to the clause of the Constitution of the United States forbidding a State to deprive any person of his property without due process of law.
2. In matters involved in the accounts of such special administrator, the executor or administrator with the will annexed represents all claiming under the will, and can examine such accounts, and, if not satisfactory, contest their correctness.
3. When a special administrator ceases to act as such, he must account, for the property and estate in his hands, to the executor or administrator with the will annexed, who acts for all interested in the distribution of the estate.
4. As, therefore, the regular representative of the estate has an opportunity to contest the final settlement of the special administrator, it cannot be said that the absence of notice to the distributees amounts to a deprivation of their rights of property without due process of law.

[No. 1088.]

Submitted March 20, 1888 Decided April 16, 1888.

IN ERROR to the Supreme Court of the State of Missouri, to review a judgment of that court affirming the judgment of the Court of Common Pleas of that State in favor of defendant, on demurrer, in an action to set aside a final settlement of an administrator *pendente lite*.

Motion to dismiss for want of jurisdiction. *Judgment affirmed.*

Reported below, 4 West. Rep. 689, 89 Mo. 303.

Statement by *Mr. Justice* **Harlan:**

By the statutes of Missouri relating to the granting of letters testamentary and of administration, it is provided: "If the validity of a will be contested, or the executor be a minor or absent from the State, letters of administration shall be granted, during the time of such contest, minority or absence, to some other person [other or different from the one charged with the execution of the will, *Lamb* v. *Helm*, 56 Mo. 432], who shall take charge of the property and administer the same according to law, under the direction of the court, and account for and pay and deliver all the money and property of the estate to the executor or regular administrator, when qualified to act." Gen. Stat. Mo. chap. 120, § 13; Rev. Stat. Mo. chap. 1, art. 1, § 14.

The present suit was brought in behalf of distributees to falsify a final settlement, made in one of the probate courts of Missouri, of the accounts of a special administrator, who was appointed, under the authority of the above statute, to take charge of and administer the property of a testator pending a contest as to the validity of his will. The plaintiff claims that at that settlement the distributees were not represented, and did not have actual or constructive notice thereof. After the contest as to the will ended, the probate court passed an order as to the balance in the hands of the special administrator, directing him to turn the same over to the executors of the estate, and providing for the discharge of himself and sureties, upon his filing in that court the receipt of the executors for such balance. The executors having their receipt for all the property held by him, as shown by his final settlement, and the same having been filed, an order was passed by the probate court for the final discharge of the special administrator.

The Supreme Court of Missouri held, in the present case, that while the laws of that State (Gen. Stat. chap. 124, §§ 16-19; Rev. Stat. 1879, §§ 238-241) required notice by publication of the final settlement of executors and administrators, notice was not required in respect to settlements of special administrators in whose hands the property of a testator is placed pending a contest as to the validity of his will. Its language was: [60]

"As was said in *Lamb* v. *Helm*, 56 Mo. 433, such special administrators occupy more nearly the position of a receiver, who acts under the direction of the court, than they do the position of a general administrator. The special administrator is appointed for temporary purposes only (*Hawkins* v. *Cunningham*, 67 Mo. 415); and when the contest as to the will is over, and the nominated executor qualifies, his functions are at an end, and he must settle his accounts, and turn over the property in his hands to the regular executor or administrator. This accounting is his final accounting, it is true; but it is not a final settlement of the estate, contemplated when notice is required to be given. There is no need of any notice, for there is then a regular representative of the estate with whom the settlement is made under the direction of the probate court. The statute which provides for notice on final settlements, therefore, has no application to settlements made by an administrator *pendente lite*, and notice is not required.

"As to section 47, chapter 120, which provides that if any administrator die, resign, or his letters be revoked, he or his legal representatives shall account to the successor, etc., it is sufficient to say the section has no application to this case, for here the special administrator neither resigned nor were his letters revoked, but his powers ceased by operation of law and the express terms of the appointment. We do not intimate that in these cases notice of the settlement must be given, though, when an administrator desires to resign, notice of his intention to make application to that end must be given.

"It follows that the judgment of the probate court discharging the special administrator is final and conclusive, even as against the plaintiff, for there is no saving clause as to minors or married women. The petition does not seek relief on the ground of fraud." *RoBards* v. *Lamb* [4 West. Rep. 689], 89 Mo. 303.

Mr. **George G. Vest,** for defendant in error, in support of motion to dismiss for want of jurisdiction:

No federal question was presented to and decided by the Supreme Court of Missouri. No such question was necessary to the decision and judgment made, and none such was passed upon by that court; hence this court has no

jurisdiction to review the judgment of the Supreme Court of Missouri.

Detroit City R. Co. v. *Guthard*, 114 U. S. 133 (29:118); *Chouteau* v. *Gibson*, 111 U. S. 200 (28:400); *Murdock* v. *Memphis*, 87 U. S. 20 Wall. 590 (22:429); *Brown* v. *Colorado*, 106 U. S. 97 (27:133); *McManus* v. *O'Sullivan*, 91 U. S. 578 (23:390); *Brown* v. *Atwell*, 92 U. S. 329 (23:512); *Simmerman* v. *Nebraska*, 116 U. S. 54 (29:535).

The opinion of the court in the record herein shows that its judgment was based upon statute law of the State, against which no constitutional objection was raised by the plaintiff, and therefore the judgment was not against any constitutional right presented to the court.

Adams County v. *Burlington & M. R. R. R. Co.* 112 U. S. 126, 127 (28: 679, 680); *Chapman* v. *Crane*, 123 U. S. 540 (*ante*, 235); *Brooks* v. *Missouri*, 124 U. S. 394 (*ante*, 454).

It is not contended that the state law so construed is in violation of the Constitution of the United States.

New York L. Ins. Co. v. *Hendren*, 92 U. S. 286 (23:709); *Dugger* v. *Bocock*, 104 U. S. 596 (26:846); *San Francisco* v. *Scott*, 111 U. S. 769 (28:593); *Grame* v. *Virginia Mut. Assur. Soc.* 112 U. S. 274 (28:716); *Citizens' Bank* v. *Board of Liquidation*, 98 U. S. 140 (25:114).

But if the court should determine that a federal question is involved, under the rule in *Murdock* v. *Memphis*, *supra*, the judgment should be affirmed.

Mr. **James Carr**, for plaintiff in error, in opposition:

There is a federal question presented by the record, and this court has jurisdiction, under section 709 of the Revised Statutes, to decide said question.

There was no privity between the plaintiff as residuary legatee and devisee under the will of John B. Helm, and the defendant as administrator *pendente lite;* nor between the plaintiff as such legatee and devisee, and the executors of said will. Hence the plaintiff was not bound by the defendant's *ex parte* settlement, in the absence of a legal notice, actual or constructive.

Bigelow, Estop. 4th ed. 139; *Robertson* v. *Wright*, 17 Gratt. 534; *Hopkins* v. *McCann*, 19 Ill. 113; *Russell* v. *Place*, 94 U. S. 606 (24: 214); *Edmonds* v. *Crenshaw*, 39 U. S. 14 Pet. 166 (10: 402); *Payne* v. *Hook*, 74 U. S. 7 Wall. 425 (19:260); *Deneale* v. *Stump*, 33 U. S. 8 Pet. 528 (8:1033); *Stone* v. *Wood*, 16 Ill. 177; *Garnett* v. *Macon*, 6 Call, 308.

Notice, actual or constructive, must be given in every action or proceeding *in personam*, in order that the court may acquire jurisdiction over the party, and thus make its judgment binding and conclusive.

Webster v. *Reid*, 52 U. S. 11 How. 437 (13: 761); *Walden* v. *Craig*, 39 U. S. 14 Pet. 154 (10: 397); *Hollingsworth* v. *Barbour*, 29 U. S. 4 Pet. 475 (7:926); *Thatcher* v. *Powell*, 19 U. S. 6 Wheat. 119 (5:221).

Even in a proceeding *in rem* no judgment or decree is binding without notice.

The Mary, 13 U. S. 9 Cranch, 126 (3: 678).

The validity of the statute in regard to the duties of an administrator *pendente lite* has been drawn in question in this case, on the ground that it has not provided for his giving notice of his final settlement, and for that reason it is repugnant to the first section of the Fourteenth Amendment to the Constitution of the United States.

Des Moines Nav. & R. R. Co. v. *Iowa Homestead Co.* 123 U. S. 552 (*ante*, 202).

It is admitted that if the plaintiff had been notified, she would be estopped from afterwards controverting the legality of said commissions.

Hagar v. *Reclamation Dist.* 111 U. S. 701 (28:569); *Chicago L. Ins. Co.* v. *Needles*, 113 U. S. 574; (28:1084); *Kennard* v. *Louisiana*, 92 U. S. 480 (23:478); *Foster* v. *Kansas*, 112 U. S. 201 (28:629).

When a party has a right secured by federal law, his right cannot be denied by silence or evasion.

Chapman v. *Crane*, 123 U. S. 540 (*ante*, 235).

The federal question lies in front of this case, and it must be decided before the equity in this case can be reached.

Chapman v. *Crane*, *supra*.

It is one of the highest duties of this court to see that the constitutional right of the plaintiff to due process of law in protecting her property is preserved.

Hale v. *Finch*, 104 U. S. 261 (26:732); *Brooklyn C. & N. R. R. Co.* v. *National Bank of the Republic*, 102 U. S. 14 (26:61).

The defendant not having given any notice of his final settlement, it is subject to correction if illegal or erroneous.

Picot v. *Biddle*, 35 Mo. 29; *Sheetz* v. *Kirtley*, 62 Mo. 417; *State* v. *Roeper*, 82 Mo. 57; *North* v. *Priest*, 81 Mo. 561; *Baker* v. *Runkle*, 41 Mo. 391.

The allowance of the illegal commissions charged in the plaintiff's bill is a constructive fraud.

Oldham v. *Trimble*, 15 Mo. 225; *Clark* v. *Henry*, 9 Mo. 339; *Clyce* v. *Anderson*, 49 Mo. 37; *Smiley* v. *Smiley*, 80 Mo. 44.

An administrator is a trustee.

Houts v. *Shepherd*, 79 Mo. 141; *Merritt* v. *Merritt*, 62 Mo. 150.

The federal question stands in front of the equity question and completely bars the entrance to it.

Murdock v. *Memphis*, 87 U. S. 20 Wall. 590 (22: 429); *Baltimore & O. R. R. Co.* v. *Maryland*, Id. 648 (22: 446).

The defendant was only entitled to five per cent commission.

Hawkins v. *Cunningham*, 67 Mo. 415.

The following cases show what constitutes due process of law, and what does not.

Hagar v. *Reclamation Dist.* 111 U. S. 701 (28:569); *Davidson* v. *New Orleans*, 96 U. S. 97 (24:616); *Foster* v. *Kansas*, 112 U. S. 201 (28: 629); *Kennard* v. *Louisiana*, 92 U. S. 480 (23: 478); *Slaughter House Cases*, 83 U. S. 16 Wall. 36 (21:394); *Pennoyer* v. *Neff*, 95 U. S. 714 (24: 565); *Boswell* v. *Otis*, 50 U. S. 9 How. 336 (13: 164); *Webster* v. *Reid*, 52 U. S. 11 How. 437 (13:761); *Nations* v. *Johnson*, 65 U. S. 24 How. 195 (16:628); *Murray* v. *Hoboken L. & I. Co.* 59 U. S. 18 How. 272 (15:372).

Under the system of code pleading in Missouri there is but one form of action; that is, by petition.

Gen. Stat. Mo. chap. 165, p. 658, § 3; chap. 161, p. 651, § 1; *Tyler* v. *Magwire*, 84 U. S. 17 Wall. 285-288; (21:584, 585); *Kerr* v. *Simmons*,

82 Mo. 269; *Pier* v. *Heinrichoffen*, 52 Mo. 333; *State* v. *Carroll*, 63 Mo. 156.

The petition in this case complies fully with the requirements of the Code of Missouri in setting out the facts constituting a cause of action.

Bliss, Code Pl. 2d ed. 821; *Hess* v. *Young*, 59 Ind. 379; *Smith* v. *Sims*, 77 Mo. 269; *Sharkey* v. *McDermott*, 8 West. Rep. 737, 91 Mo. 647; *Smiley* v. *Smiley*, 80 Mo. 44.

Mr. Justice **Harlan** delivered the opinion of the court:

The only question, among those presented, of which this court can take cognizance, is whether the statute of Missouri which authorizes a special administrator, having charge of the estate of a testator pending a contest as to [62] the validity of his will, to have a final settlement of his accounts without giving nctice to distributees,—and which settlement, in the absence of fraud, is deemed conclusive as against such distributees,—is repugnant to the clause of the Constitution of the United States forbidding a State to deprive any person of his property without due process of law. We have no difficulty in answering this question in the negative. Without stating all the grounds upon which this conclusion migbt be rested, it is sufficient to say that, in matters involved in the accounts of such special administrator, the executor or administrator with the will annexed represents all claiming under the will. The regular representative of the estate, before passing his receipt to the special administrator, has an opportunity to examine this settlement, and, if it is not satisfactory, to contest its correctness by some appropriate proceeding. When an executor or administrator with the will annexed proposes to make a final settlement of his own accounts, he is required to give notice to creditors and distributees; for there are no other representatives of the estate. But when a special administrator ceases to act as such,—that is, when his functions cease by operation of law,—he must account for the property and estate in his hands to the executor or administrator with the will annexed, who, in receiving what had been temporarily in the charge of the former, acts for all interested in the distribution of the estate. As, therefore, the regular representative of the e 'ate has an opportunity to contest the final settlement of the special administrator before giving him an acquittance, it cannot be said that the absence of notice to the distributees of such settlement amounts to a deprivation of their rights of property without due process of law.

The judgment is affirmed.

---

[51] UNITED STATES, *Appt.*,

v.

WILLIAM G. WELD ET AL., Surviving Partners of WILLIAM F. WELD AND COMPANY.

(See S. C. Reporter's ed. 51-58.)

Jurisdiction of court of claims—suit dependent on treaty—section 1059, Rev. Stat.—expenses of Geneva Arbitration.

1. A suit against the United States to recover an unsatisfied part of a judgment, rendered in favor of plaintiffs in the Court of Commissioners of Alabama Claims, which had been illegally withheld from them by the Secretary of the Treasury of the United States and the accounting officers of that Department, is not a case growing out of and dependent upon the Treaty of Washington between the United States and Great Britain; and the court of claims is not prohibited from taking jurisdiction of it.

2. The claimants do not seek to recover upon any obligation created by that Treaty but upon the specific appropriation made in the Act of June 2, 1886. The claim, therefore, is founded upon a law of Congress, within the meaning of section 1059, Revised Statutes, and is one of which the court of claims has jurisdiction.

3. The dependency of the claim upon the Treaty is too remote to come within the section of the statute, which contemplates a direct connection between the Treaty and the claim, in order to exclude the latter from the jurisdiction of the court of claims.

4. The accounting officers of the Treasury Department were in error in charging to and deducting from the fund the expenses of the Tribunal of Arbitration at Geneva. The payment of those expenses had already been provided for by the Act of December 21, 1871, and were not chargeable to this fund.

[No. 1366.]

Submitted March 20, 1888. Decided April 16, 1888.

APPEAL from a judgment of the Court of Claims in favor of claimants in a suit to recover an unsatisfied part of a judgment rendered in the Court of Commissioners of Alabama Claims, that had been improperly withheld from claimants by the Treasury Department. *Affirmed.*

The facts are fully stated in the opinion.

Messrs. **A. H. Garland,** *Atty-Gen.*, and **Robert A. Howard,** *Asst. Atty-Gen.*, for appellant:

This claim is excluded from the jurisdiction of the court of claims by section 1066, Revised Statutes, because it is a claim growing out of and dependent upon treaty stipulations.

Meade v. *U. S.* 76 U. S. 9 Wall. 691 (19:687); *Great Western Ins. Co.* v. *U. S.* 112 U. S. 193, 197 (28: 687, 688); *Alling* v. *U. S.* 114 U. S. 562 (29: 272).

Section 1066, Revised Statutes, is not repealed by the Act of March 3, 1887.

Henderson's Tobacco, 78 U. S. 11 Wall. 652, 657 (20: 235, 237); *Daviess* v. *Fairbairn*, 44 U. S. 3 How. 636, 646 (11: 760, 765); *Jackson* v. *State*, 12 Ga. 1; *People* v. *Durick*, 20 Cal. 94; *Commonwealth* v. *Carpenter*, 100 Mass. 204; *Distilled Spirits*, 78 U. S. 11 Wall. 356 (20: 167); *U. S.* v. *Freeman*, 44 U. S. 3 How. 556 (11: 724); *Townsend* v. *Little*, 109 U. S. 504, 512 (27: 1012, 1015).

The Government cannot be sued without its consent in courts of its own creation.

U. S. v. *Clarke*, 33 U. S. 8 Pet. 436, 444 (8: 1001, 1004); *Cary* v. *Curtis*, 44 U. S. 3 How. 236, 245 (11: 576, 581); *Beers* v. *Arkansas*, 61 U. S. 20 How. 527 (15: 991); *U. S.* v. *Lee*, 106 U. S. 196 (27: 171).

Messrs. **Samuel Shellabarger,** and **Jeremiah M. Wilson,** for appellees:

Section 1066, Revised Statutes, is superseded and repealed.

Wakefield v. *Phelps*, 37 N. H. 296; *Farr* v. *Brackett*, 30 Vt. 344; *Giddings* v. *Cox*, 31 Vt. 607 *State* v. *Conkling*, 19 Cal. 501; *U. S.* v. *Claflin*, 97 U. S. 551 (24: 1084); *Norris* v. *Crocker*, 54 U. S. 13 How. 429 (14: 210); *King* v. *Cornell*, 106 U. S. 396 (27: 60).

Legal signification of the words, "growing

out of, or dependent on, any treaty stipulation."

Dainese v. *U. S.* 15 Ct. Cl. 64; *Ex parte Atocha*, 84 U. S. 17 Wall. 439 (21: 696); *Alling* v. *U. S.* 114 U. S. 562 (29: 272); *Great Western Ins. Co.* v. *U. S.* 112 U. S. 193 (28: 687); *Rustomjee* v. *The Queen*, L. R. 1 Q. B. Div. 487; *S. C.* L. R. 2 Q. B. Div. 69; *Great Western Ins. Co.* v. *U. S.* 19 Ct. Cl. 211; *Burnand* v. *Rodocanachi*, L. R. 5 C. P. Div. 424; *S. C.* 6 Q. B. Div. 633, L. R. 7 App. Cas. 333.

The court of claims has jurisdiction under section 1059, Revised Statutes, providing that the court of claims shall have jurisdiction to hear and determine all claims founded upon any law of Congress.

Hukill v. *U. S.* 16 Ct. Cl. 562; *Blount* v. *U. S.* 21 Ct. Cl. 274; *Huffman* v. *U. S.* 17 Ct. Cl. 55; *Mordecai* v. *U. S.* 19 Ct. Cl. 11; *George* v. *U. S.* 18 Ct. Cl. 432; *Wray* v. *U. S.* 19 Ct. Cl. 154; *Chesapeake & O. R. R. Co.* v. *U. S.* 19 Ct. Cl. 300; *S. C.* 20 Ct. Cl. 49; *Nashville, C. & St. L. R. Co.* v. *U. S.* 19 Ct. Cl. 476; *S. C.* 113 U. S. 261 (28: 971).

Where a claim is valid, and is recoverable in this court under the first clause of section 1059, the rejection of the claim by the accounting officers has no effect upon the right of action.

Thomas v. *U. S.* 16 Ct. Cl. 522; *Brown* v. *U. S.* 6 Ct. Cl. 171; *McKnight* v. *U. S.* 13 Ct. Cl. 292, affirmed on appeal, 98 U. S. 179 (25: 115); *Real Estate Sav. Bank* v. *U. S.* 16 Ct. Cl. 350, affirmed on appeal; *Barnett* v. *U. S.* 16 Ct. Cl. 521, affirmed on appeal; Rev. Stat. §§ 246, 247.

Mr. Justice **Lamar** delivered the opinion of the court:

This is an appeal from the court of claims. The suit was brought in that court by the appellees, who were plaintiffs below, to recover from the United States the sum of $5,306.71, which sum they alleged was an unsatisfied part of a judgment recovered by them in the Court of Commissioners of Alabama Claims that had been improperly and illegally withheld from them by the Secretary of the Treasury of the United States and the accounting officers of that Department.

The petition was filed October 4, 1887, and sets forth that on the 24th of October, 1883, [52] the appellees recovered a judgment in the Court of Commissioners of Alabama Claims, including interest, for the sum of $346,982.46, the case in which the said judgment was rendered being one of the second class, of which the said court was given jurisdiction by the Act of Congress approved June 5, 1882, 22 Stat. at L. 98, entitled "An Act Re-establishing the Court of Commissioners of Alabama Claims and for the Distribution of Unappropriated Moneys of the Geneva Award;" that the aggregate amount of judgments of the second class rendered by said court under the said Act of June 5, 1882, including interest, was $16,292,607.26, and of judgments of the first class, including interest, was $3,350,947.51; that under and in pursuance of the provisions of the Act approved June 2, 1886, entitled "An Act to Provide for Closing up the Business and Paying the Expenses of the Court of Commissioners of Alabama Claims, and for Other Purposes," after crediting to the amount of the said Geneva Award fund named in section 5 of said Act, to wit, $10,089,004.96, the amounts authorized by said Act, charging it with the amounts in said Act directed and specified, and deducting from it the amount of the judgments on claims of the first class, to wit, $3,350,947.51, as aforesaid, there remained to satisfy *pro rata* the judgments on claims of the second class the sum of $5,988,668.82; that instead of distributing said last named sum *pro rata* among the judgment creditors of the second class, as they were required to do under the said Act of June 2, 1886, the Secretary of the Treasury and the accounting officers of his Department wrongfully and in violation of said statute first deducted therefrom the sum of $249,168.48, which sum was claimed by them to be available, under the Act, for the purpose of reimbursing the United States for the expenses of the Tribunal of Arbitration at Geneva,—which expenditures had been already paid by the United States under and in pursuance of an Act of Congress approved December 21, 1871, entitled "An Act to Make Appropriations for Expenses That May Be Incurred under Articles 1 to 9, Inclusive, of the Said Treaty Between the United States and Great Britain, Concluded at Washington, May 8, 1871," 17 Stat. at L. 24,—and only distributed among said judgment creditors the sum of $5,739,495.41; that by reason of such deduction the said claimants have been deprived of their proportionate share of the said sum of $249,168.41, to wit, the sum of $5,306.71; and that no assignment or transfer of said claim, or any part thereof or interest therein, has been made by claimants, and that they are justly entitled to the said sum of $5,306.71, after allowing all just credits and set-offs,—for which said sum they demand judgment. [53]

The answer of the United States consisted of a general denial of all the material allegations in claimants' petition, and, the case having been heard before the court of claims, the court, upon the evidence, found the facts to be substantially as follows:

1. October 24, 1883, the plaintiffs recovered judgment in the Court of Commissioners of Alabama Claims for $229,637.63, together with interest, aggregating the sum of $346,982.46, such judgment being one of the second class named in the Act of Congress, entitled "An Act Re-establishing the Court of Commissioners of Alabama Claims, and for the Distribution of the Unappropriated Moneys of the Geneva Award, Approved June 5, 1882," 22 Stat. at L. 98, and duly certified and transmitted to the Secretary of the Treasury as provided by said Act.

2. The aggregate amount of judgments of the second class rendered by said court re-established by said Act, including interest, was $16,292,607.26; and the aggregate amount of judgments of the first class, including interest, was $3,350,947.51.

3. The Secretary of State, in pursuance of the provisions of the fourth section of the Act of June 2, 1886, entitled "An Act to Provide for Closing up the Business and Paying the Expenses of the Court of Commissioners of Alabama Claims, and for Other Purposes," 24 Stat. at L. 77, found and estimated the value of the furniture named in said section to be $800, and the same was credited to the fund to be

distributed under said Act; and the Secretary of State, with the assistance of the clerk of said court, under the provisions of said section 4 of said Act, estimated the cost and expenses therein mentioned at $15,000, and the same was charged to said fund.

[54] 4. Under the provisions of section 4 of said Act of 1886 the accounting officers of the Treasury, for the purpose of making distribution of the balance of the Geneva Award fund to the judgment creditors, as therein required, stated the account, allowing the proper credits and charging the fund with the amounts directed and specified therein, including therein as chargeable to said fund, and deducting therefrom, the "expenses of the Tribunal of Arbitration at Geneva,"—$249,168.41.

5. The claimants were paid their proportion of said balance as so stated by the accounting officers, being 35.22760549 per cent of their said judgment, but have received no part of that portion of said fund which was so retained to reimburse the expenses of the Tribunal of Arbitration at Geneva, $249,168.40. If said last named sum is not legally chargeable to said fund, the claimants' proportion thereof would be $5,306.53, which the defendants have not paid and which they refuse to pay.

The court thereupon decided, as a conclusion of law, that the claimants were entitled to recover the sum of $5,306.53, and rendered judgment accordingly.

The main question in this case is a jurisdictional one. On behalf of the United States it is claimed that this is a case growing out of, and dependent upon, the Treaty of Washington, concluded May 8, 1871, between the United States and Great Britain, and proclaimed July 4, 1871, 17 Stat. at L. 863; and that therefore, by the express provisions of section 1066, Revised Statutes of the United States, the court of claims was prohibited from taking jurisdiction of it. On behalf of the appellees it is contended that this case is not embraced within the class of cases of which the court of claims is prohibited by section 1066, Revised Statutes, from taking jurisdiction. But if that contention cannot be sustained, then it is insisted by appellees that said section 1066 has been repealed by the Act of Congress approved March 3, 1887, 24 Stat. at L. 505, and is no longer law.

There is no dispute, apparently, as to the correctness of the finding of the court below on [55] the facts in the case; neither is there any very great contention as to the correctness of the judgment below, if it be found that that court had jurisdiction.

To sustain the view of the case contended for on behalf of the United States, much reliance is placed on the decisions of this court in *Great Western Insurance Company* v. *United States*, 112 U. S. 193 [28:687], and *Alling* v. *United States*, 114 Id. 562 [29:272]. We are of opinion, however, that a very broad distinction exists between those cases and this one. In the first case cited, by the allegations of the petition itself, the claim was declared to grow directly out of the Treaty, and was thus clearly dependent upon it. The petition based the right of recovery on the provisions of the Treaty itself. No statute was invoked, nor was it charged that the United States was directly and primarily liable on the claim. In the language of the court below, which we approve: "In that case the claimant corporation was not seeking to recover under any law of Congress, but was attempting to enforce an alleged implied assumpsit on the part of the United States, growing out of and dependent upon the Treaty of Washington, notwithstanding the laws of Congress, which expressly excluded its claim from consideration, and from payment out of the fund in controversy. Instead of founding its claim on any law of Congress, as do the present claimants, the company invoked the jurisdiction of this court to set aside and annul the statute provisions."

The *Alling Case* is, in principle, the same as the *Great Western Insurance Case*. In that case the claim on which the suit was based was alleged in the petition to be founded on a treaty stipulation. It had been submitted to the commission authorized and created in accordance with the provisions of the Treaty of July 4, 1868, between the United States and Mexico (15 Stat. at L. 569), for the adjustment of claims of the citizens of the respective countries against the government of the other for injuries to persons and property; and the award of that commission was that the Mexican Government should pay to the United States, on account of the claim, a specific sum of money, out of which the United States might retain a certain amount on account of certain duties originally paid by [56] claimants, but subsequently refunded to them by the United States. The claimants, having received the sum specifically awarded to them by the commission, and having been refused the sum retained by the United States on account of the duties aforesaid, by the Secretary of the Treasury, brought an action in the court of claims to recover the amount of said duties. This court held that the court of claims had no jurisdiction to entertain such a suit, and ordered the dismissal of the petition, because the claim was founded on and grew out of the Treaty with Mexico, and was therefore clearly within the provisions of section 1066, United States Revised Statutes. The reason of the ruling by this court in that decision is plain. The claim there in controversy was expressly recognized as a specific claim by the commission organized under the provisions of the Treaty with Mexico, and was therefore dependent upon the treaty and grew directly out of it.

In this case the reverse is true. The Treaty of Washington did not recognize this claim as a specific claim. The award of $15,500,000, directed to be paid by Great Britain, was to the United States as a nation. The text of the Treaty itself speaks of the "claims on the part of the United States," and in article 7 the gross sum was "to be paid by Great Britain to the United States." It is not necessary to discuss whether, in the absence of any action by Congress as to the distribution of this fund, there could have been any legal or equitable right in any person or corporation to any portion of it. The fact that the Congress of the United States undertook to dispose of this fund, and to administer upon it, in accordance with its own conceptions of justice and equality, precludes, at least for the purposes of this decision, judicial inquiry into such questions. The claimants had to rely upon the justice of the Gov-

ernment, in some of its departments, for compensation in satisfaction of their respective claims; and this compensation the various Acts of Congress heretofore mentioned provided. The claimant in this case does not seek to recover upon any supposed obligation created by the Treaty of Washington, but upon the specific appropriation made in the Act of June 2, [57] 1886. It was under this Act that a means of satisfaction of this claim was provided. The claim may therefore be said to be "founded upon a law of Congress," within the meaning of Rev. Stat. § 1059, and therefore clearly one of which the court of claims could take jurisdiction.

It may be said, in opposition to this view of the case, that, had there been no Treaty of Washington, there would have been no fund of $15,500,000 to distribute; the Act of June 5, 1882, would never have been passed; and therefore that the Treaty is the basis of all the subsequent legislation, and consequently the basis of this claim,—in other words, that therefore this claim is "dependent upon and grows out of" the Treaty of Washington.

We are of opinion, however, that such a *dependency upon* or *growing out of* is too remote to come within the meaning of Rev. Stat. § 1066. In our view of the case, the statute contemplates a *direct* and *proximate* connection between the Treaty and the claim, in order to bring such claim within the class excluded from the jurisdiction of the court of claims by Rev. Stat. § 1066. In order to make the claim one arising out of a treaty within the meaning of Rev. Stat. § 1066, the *right itself*, which the petition makes to be the foundation of the claim, must have its origin—derive its life and existence—from some treaty stipulation. This ruling is analogous to that of the ancient and universal rule relating to damages in common-law actions, namely, that a wrongdoer shall be held responsible only for the *proximate*, and not for the *remote*, consequences of his actions.

This disposition of this question renders it unnecessary to consider whether section 1066 has been repealed by the subsequent Act of Congress, approved March 3, 1887, *supra*, since, if there has been such repeal, it is admitted, on all hands, that the court of claims would have jurisdiction of the case.

On the merits of the case, we think there can be no doubt that the accounting officers of the Treasury Department were in error in charging to and deducting from the fund the expenses of the Tribunal of Arbitration at Geneva. The payment of those expenses had al- [58] ready been provided for by Congress by the Act of December 21, 1871, 17 Stat. at L. 24, and were never chargeable to this fund.

In the language of the court below: "Section 5 of the Act of June 2, 1886, *supra*, fixes the amount of the fund, and specifies exactly what shall be deducted from it, and provides that the balance shall be distributed to the judgment creditors. The item thus deducted was not among those thus specified."

We are of the opinion that the claimants are entitled to their share of the amount thus improperly deducted, and the decision of the Court of Claims is therefore affirmed.

CHARLES H. PAGE, *Appt.*, [67]
v.
UNITED STATES.

(See S. C. Reporter's ed. 67-69.)

Section 51, Rev. Stat.—vacancy in Congress.

1. The proper construction of section 51 of the Revised Statutes, in regard to a vacancy in Congress, is that the predecessor of the person elected to fill a vacancy must be a person who was the predecessor in the same Congress.

2. One whose credentials showed that he was regularly elected a member of Congress, and who was sworn in and took his seat, and served, and drew the salary, was—although his seat was contested, and subsequently he was declared by Congress not to have been elected, and his seat was declared vacant—the predecessor of the person elected to fill the vacancy in the same Congress within the meaning of said section.

[No. 1387.]

Submitted April 2, 1888. Decided April 16, 1888.

APPEAL from a judgment of the Court of Claims dismissing a petition of claimant for pay as a member of Congress. *Affirmed.*

The facts fully appear in the opinion.

Mr. **Allan Rutherford** for appellant.

Mr. **A. H. Garland**, *Atty-Gen.*, and **Heber J. May**, *Asst. Atty-Gen.*, for appellee.

Mr. Justice **Blatchford** delivered the opinion of the court:

This is an appeal by the claimant from a judgment of the court of claims, dismissing his petition, on the following facts found by that court: An election was held on the 4th of November, 1884, in the Second Congressional District of Rhode Island, for the purpose of electing by the people a representative in [68] the Forty-ninth Congress, for that district. William A. Pirce was declared by the proper authority to have been elected, received a certificate of election from the Governor of the State, and was sworn in and took his seat in the Congress of the United States on the 4th of March, 1885. His election was contested by Charles H. Page. On the 25th of January, 1887, the House of Representatives of the 49th Congress agreed to the following resolution, to wit: "*Resolved*, that William A. Pirce was not elected a member of the House of Representatives of the Forty-ninth Congress from the Second Congressional District of Rhode Island, and that the seat be declared vacant." An election was thereafter held in Rhode Island to fill such vacancy, and, on the 25th of February, 1887, Charles H. Page presented to the House of Representatives a certificate from the Governor of Rhode Island, setting forth that he was, on the 21st of February, 1887, regularly elected a representative from that State in the Forty-ninth Congress, to fill the vacancy caused by the action of the House of Representatives in declaring the seat of William A. Pirce vacant. Thereupon Page was sworn in and took his seat. Pirce occupied the seat from March 4, 1885, to January 25, 1887, was recognized as the sitting member, voted, served on committees, and drew the salary for that time, amounting to $9,468.18, and also received mileage in the sum of $344. Page occupied the seat from February 25, 1887, to March 3, 1887, was recognized as the

sitting member for that time, voted, served on committees, and drew the salary from January 25, 1887, to March 3, 1887, amounting to $531.82, and also received mileage in the sum of $175.20.

Page, by his petition to the court of claims, claimed that he was entitled to the full pay of $5,000 a year for the two years from March 3, 1885, to March 3, 1887, and that therefore he was entitled to the further payment of $9,468.-18. The contention of Page is that, on the facts found, Pirce, not having been elected a member of the Forty-ninth Congress, was never such member; that therefore he was not the predecessor of Page within the meaning of section 51 of the Revised Statutes; and that the member of the House of Representatives from the Second Congressional District of Rhode Island in the Forty-eighth Congress was such predecessor.

[69]

Section 51 of the Revised Statutes provides as follows: "Whenever a vacancy occurs in either House of Congress, by death or otherwise, of any member or delegate elected or appointed thereto, after the commencement of the Congress to which he has been elected or appointed, the person elected or appointed to fill it shall be compensated and paid from the time that the compensation of his predecessor ceased." The argument made is that, under this section, no person could have been the predecessor of Page unless he was a member elected for the Forty-ninth Congress; and that Pirce was declared by the House of Representatives not to have been elected such member. But, although Pirce may not have been so elected, it does not follow that he was not the predecessor of Page within the meaning of section 51, or that the representative in the 48th Congress was such predecessor.

The proper construction of section 51 is that the predecessor of the person elected to fill a vacancy must be a person who was the predecessor in the same Congress. If no such person is to be found, because no such person was duly elected, Page had no predecessor in the sense of section 51, and that section does not apply to his case. But we think that, under the proper construction of section 51, Pirce was the predecessor of Page as to compensation or salary. His credentials showed that he was regularly elected; he must have been placed on the roll of Representatives-elect, under section 31 of the Revised Statutes; he was sworn in, took his seat, voted, served on committees, and drew the salary and the mileage. Under sections 38 and 39 he was entitled to his salary, because his credentials, in due form of law, had been duly filed with the clerk, under section 31, and because he took the required oath. Section 51 refers only to a vacancy occurring after the commencement of a particular Congress, and in the membership of that Congress; and the reference to a "predecessor" is plainly intended to apply only to a predecessor in that Congress. If there was any such predecessor of Page, it was Pirce. If there was no predecessor of Page in that Congress, section 51 does not apply to the case.

The judgment of the Court of Claims is affirmed.

UNITED STATES, *Appt.*, [182]
v.
STATE OF LOUISIANA.

(See S. C. Reporter's ed. 182-192.)

Proceeds of swamp lands not a trust fund—Act of 1850—five per cent fund—Statute of Limitations.

1. The proceeds of the swamp lands granted by the Act of 1850 are not subject to a property trust, either in the hands of the United States or in those of the State, in such sense that the claim of the United States upon the State, for the overdue coupons on the Indian trust bonds issued by the State, cannot be set off against the claim of the State to the swamp land fund.

2. Under the Act of 1850 the swamp lands are to be conveyed to the State as an absolute gift, with a direction that their proceeds shall be applied, as far as necessary, to reclaiming the lands. There is nothing to prevent the application, by the State, of the swamp land fund to general purposes.

3. The five per cent fund provided for in the Act of 1811 is not of such a character that the debt due to the United States by the State of Louisiana for the overdue coupons on the Indian trust bonds cannot be set off against the fund which is in the hands of the United States.

4. The limitation of six years in section 1069 of the Revised Statutes applies to a claim of the State for moneys due to it from the five per cent fund.

[No. 1388.]

Submitted April 2, 1888. Decided April 23, 1888.

APPEAL from a judgment of the Court of Claims awarding to the State of Louisiana a claim, under the Act of February 20, 1811, chapter 21, 2 Stat. at L. 641, to the five per cent fund, and a claim, under the Act of September 28, 1850, chapter 84, 9 Stat. at L. 519, and the Act of March 2, 1855, chapter 147, 10 Stat. at L. 634, to the swamp land fund. *Reversed.*

Reported below, 22 Ct. Cl. 85. 284.

The facts are fully stated in the opinion.

Messrs. **A. H. Garland,** *Atty-Gen.*, and **Heber J. May,** *Asst. Atty-Gen.*, for appellant:

The chief question in this case is as to the character of the respective funds upon which the claim of the State of Louisiana is based. Are they, respectively, trust funds? This question was argued, but was passed over without notice, in *United States* v. *Louisiana*, 123 U. S. 32 (*ante*, 69).

The grant is an absolute gift, coupled with the provision that so much thereof as may be necessary shall be used for the purpose named.

Wright v. *Roseberry*, 121 U. S. 488 (30:1039).

The funds are not trust funds, and the Government not a trustee.

Rice v *U. S.* 122 U. S. 611 (30:793).

The net proceeds of these lands are in the treasury like any other money, and not as a specific fund.

American Emigrant Co. v. *Wright County*, 97 U. S. 339 (24:912); *American Emigrant Co.* v. *Adams County*, 100 U. S. 66 (25:565).

The question of jurisdiction under the Statute of Limitations was passed upon in *U. S.* v. *Louisiana*, 123 U. S. 32 (*ante*, 69); *Louisiana* v. *U. S.* 22 Ct. Cl. 284.

Messrs. **William E. Earle** and **James L. Pugh, Jr.**, for appellee:

The Statute of Limitations does not have any application to the demand arising upon the Swamp Land Acts.

Wright v. *Roseberry*, 121 U. S. 488, 501 (30: 1039, 1042); *U. S.* v. *Louisiana*, 128 U. S. 37 (*ante*, 72); *Rice* v. *U. S.* 122 U. S. 611 (30:793).

The statute does not begin to run until notice of the disavowal of the trust.

The Commissioner of the General Land Office has by law exclusive jurisdiction in all matters appertaining to the surveying and sale of the public lands of the United States, and power to audit and settle all public accounts relating to the public lands.

See *Baldwin* v. *Stark*, 107 U. S. 465 (27: 526); *Marquez* v. *Frisbie*, 101 U. S. 473 (25: 800); *Shepley* v. *Cowan*, 91 U. S. 331 (23: 424).

A trustee is a person in whom some estate, interest, or power in or affecting property of any description is vested for the benefit of another.

Perry, Trusts.

No particular form of words is required to create a trust.

4 Kent, 305.

The repudiation of the trust must be clear and unequivocal; the knowledge of the repudiation must be brought home to the party to be affected by it.

U. S. v. *Taylor*, 104 U. S. 222 (26:723), and cases cited. See also *Speidel* v. *Henrici*, 120 U. S. 380 (30: 718).

This was not a donation in the sense of a gift or gratuity.

Long v. *Brown*, 4 Ala. 629.

States and municipalities may be trustees.

McDonogh v. *Murdock*, 56 U. S. 15 How. 367 (14: 732).

The Acts of Congress granting the swamp lands to the States, and providing for the payment of the indemnities, expressly and specifically provide that they shall be applied to purposes designated with certainty, and for uses which are particularly and definitely limited. These conditions in the grant, and the contract thereby created, constitute an express trust.

American Emigrant Co. v. *Wright County*, 97 U. S. 339 (24:912); *American Emigrant Co.* v. *Adams County*, 100 U. S. 66 (25:565); *Mills County* v. *Burlington & M. R. R. R. Co.* 107 U. S. 564 (27:581).

It is a personal trust in the public faith of the State.

Dunklin County v. *Dunklin County Dist. Ct.* 23 Mo. 456; *Cooper* v. *Roberts*, 59 U. S. 18 How. 173 (15:338).

Mr. Justice **Blatchford** delivered the opinion of the court:

This is an appeal by the United States from a judgment of the court of claims, awarding to the State of Louisiana the sum of $43,572.71.

There are claims of two kinds involved in the suit. The first claim arises under the Act of February 20, 1811, chap. 21, 2 Stat. at L. 641, which authorized the inhabitants of Louisiana to form a Constitution and a State Government. The 5th section of that Act provided as follows: "That five per centum of the net proceeds of the sales of the lands of the United States, after the first day of January, shall be applied to laying out and constructing public roads and levees in the said State, as the Legislature thereof may direct."

The second claim arises under sections 1, 2, [183] and 4 of the Act of September 28, 1850, chap. 84, 9 Stat. at L. 519, and sections 1 and 2 of the Act of March 2, 1855, chap. 147, 10 Stat. at L. 634. Sections 1, 2, and 4 of the Act of 1850 read as follows: "That, to enable the State of Arkansas to construct the necessary levees and drains to reclaim the swamp and overflowed lands therein, the whole of those swamp and overflowed lands, made unfit thereby for cultivation, which shall remain unsold at the passage of this Act, shall be, and the same are hereby, granted to said State. Sec. 2. That it shall be the duty of the Secretary of the Interior, as soon as may be practicable after the passage of this Act, to make out an accurate list and plats of the lands described as aforesaid, and transmit the same to the Governor of the State of Arkansas, and, at the request of said Governor, cause a patent to be issued to the State therefor; and on that patent the fee-simple to said lands shall vest in the said State of Arkansas, subject to the disposal of the Legislature thereof: *Provided, however*, That the proceeds of said lands, whether from sale or by direct appropriation in kind, shall be applied exclusively, as far as necessary, to the purpose of reclaiming said lands by means of the levees and drains aforesaid." "Sec. 4. That the provisions of this Act be extended to, and their benefits be conferred upon, each of the other States of the Union in which such swamp and overflowed lands, known and designated as aforesaid, may be situated." Section 1 of the Act of 1855 provided that the President should cause patents to be issued to purchasers or locators who had made entries of public lands claimed as swamp lands, prior to the issue of patents to the State, as provided for by section 2 of the Act of 1850, except in certain specified cases. Section 2 of the same Act provided as follows: "That upon due proof, by the authorized agent of the State or States, before the Commissioner of the General Land Office, that any of the lands purchased were swamp lands, within the true intent and meaning of the Act aforesaid, the purchase money shall be paid over to the said State or States."

The State alleged, in its petitions in the court of claims (for there were two suits, which were consolidated), that the moneys due to it under the Act of 1811, instead of being paid over to [184] it by the United States, had been unlawfully credited upon certain bonds alleged to have been issued by the State, and claimed to be held by the United States as an investment of certain Indian trust funds; that, as to the Acts of 1850 and 1855, moneys were due to the State thereunder, which had been legally ascertained and certified, but, instead of being paid over to the State, had been credited on bonds of the same kind; and that the sums referred to as being ascertained and found due to the State were trust funds, to be devoted to specific purposes, under the provisions of the Acts granting them to the State.

The United States, in addition to a general traverse, put in a special plea of set-off, alleging that the State was indebted to the United States in the amount of interest which had accrued on bonds issued by the State and held by the United States.

The court of claims found as facts: (1) that, of the five per cent fund accruing to the State under the Act of 1811, there remains due from the United States to the State, as credited on

the books of the Treasury Department, the following sums: May 8, 1879, $13,602.71; June 8, 1882, $63.47; February 7, 1884, $22,773.51; making a total of $36,439.69; and that, of the swamp land fund accruing to the State under the Acts of 1850 and 1855, there remains due from the United States to the State, as credited on the books of the Treasury Department, the following sums: May 26, 1886, $3,803.02; September 9, 1886, $1,110; May 2, 1887, $1,730.41; May 4, 1887, $489.59; making a total of $7,133.-02; (2) that the First Comptroller of the Treasury, at the dates stated in finding 1, admitted and certified the above sums to be due to the State on account of the five per cent fund and the indemnity for swamp lands purchased by individuals within the State, but directed those amounts to be credited on moneys due the United States, as stated in finding 3; and that it does not appear that the state authorities had knowledge of this proceeding; (3) that the United States own coupon bonds issued by the State, amounting to $37,000, payable in 1894, known as the Indian Trust bonds, and also hold [185] and own overdue coupons attached to those bonds, representing the interest from May 1, 1874, to November 1, 1887, amounting to $31,-080. The court gave a judgment in favor of the claimant for the total of the two amounts of $36,439.69 and $7,133.02, namely, $43,572.71.

The contention of the United States in the court of claims was that, under section 1069 of the Revised Statutes, which provides that every claim against the United States, cognizable by that court, shall be forever barred unless the petition setting forth a statement thereof is filed in the court within six years after the claim first accrues, the court had no jurisdiction in respect to the sum of $13,602.71, credited on the books of the Treasury Department on the 8th of May, 1879, as a part of the five per cent fund, because the first of the two petitions was not filed until February 1, 1887. Deducting this sum of $13,602.71 from the $43,572.71 would leave the sum of $29,970; and it was contended by the United States that the claim for this sum was more than covered by the set-off of the $31,080 due by the State on the coupons on the Indian Trust bonds.

The court of claims held that the two funds in question, in the treasury of the United States, were trust moneys, to be held for special purposes, at first by the United States, and by the State after a transfer to it; that the trust had not been disavowed or annulled by Congress; that it became the duty of the executive officers of the United States, in charge of the funds, to hand them over to the State as a succeeding trustee; that the credit given to the State in the Treasury Department, on its indebtedness to the United States, for the amount of the coupons on the Indian Trust bonds, was without authority of law; that, consequently, the funds were free from liability to the set-off; and that the claim of the State to the $13,602.71 was not barred by section 1069 of the Revised Statutes.

The provisions of the swamp land Act of 1850 have been before this court in several cases. In *American Emigrant Co.* v. *Wright County*, 97 U. S. 339 [24: 912], at October Term, 1877, the State of Iowa had, by statute, granted the swamp lands to the counties of the State in which they might be found, with an injunction that the lands and their proceeds should be ap- [186] propriated to reclaiming the swamp lands; and if, when this was accomplished, anything was left, to building roads and bridges over the same; and lastly, the remainder to be used in building roads and bridges in other parts of the county. By subsequent legislation of the State, the counties were authorized to depart from this injunction, and to use the lands for public buildings and internal improvements; but the assent of the majority of the voters of the county to such purpose was required. The State also authorized the sale of all the lands to any person or corporation by a written contract, to be in like manner submitted to the vote of the county; but the sale was to be subject to the proviso that the vendee should take the lands subject to all the provisions of the Act of Congress of 1850. Wright County, with the assent of a majority of the voters of the county, having contracted in writing with the Emigrant Company to sell to it all the swamp lands in the county, and the claim of the county for indemnity against the United States for swamp lands which had been sold by the United States, and having executed a deed of a quantity of the lands to the company, the county filed a bill in equity to set aside the contract and deed, and obtained a decree to that effect in the circuit court. In the opinion of this court, delivered by *Mr. Justice* Miller, the proposition urged by the plaintiff in the suit was considered, namely, that the contract was void on its face because it contemplated a diversion of the fund in violation of the original grant. As regarded that proposition, the court said: "It is not necessary to decide it in this case, and we do not decide that the contract is, for that reason alone, void. But we are of opinion that any purchaser of these lands from the county, or of the claim of the county to indemnity, must be held to know that in the hands of the county they were impressed with an important public trust; and that, in examining into the fairness and honesty of such a purchase, this consideration constitutes an important element of the decision." The court then proceeded, in its opinion, to hold that the contract must be rescinded, because of what amounted to fraud in the manner in which it was procured, namely: that the officers and [187] citizens of the county were ignorant of the nature and value of what they were selling; that the vendee was well informed in regard to both, and withheld such information unfairly from the officers of the county; and that there was a provision in the contract "for a diversion of the fund to other purposes, a gross inadequacy of consideration, and a successful speculation at the expense of the rights of the public."

Questions arising under the same Act of Congress of 1850, and the same legislation of Iowa, came before this court again, at October Term, 1879, in *Emigrant Co.* v. *Adams County*, 100 U. S. 61 [25:563]. In that case the County of Adams had made a contract with the Emigrant Company to convey to it the county's swamp lands, and claim for indemnity against the United States on account of swamp lands which had been sold by the United States; and had given a deed in pursuance of the contract. It afterwards filed a bill to rescind the contract and

the deed, and obtained in the circuit court a decree to that effect, which this court reversed. The case was twice argued here. In the opinion of the court, delivered by *Mr. Justice* Bradley, it was stated that there was no sufficient proof that the contract was procured by false and fraudulent representations. It was also said of the Act of 1850, that by it the lands "were granted to the several States in which they lie, for a purpose expressed on the face of the Act; and that purpose was 'to enable the State to construct the necessary levees and drains to reclaim them.'" The opinion added: "Our first view was that this trust was so explicit and controlling as to invalidate the scheme finally devised by the Legislature of Iowa for the disposal of the land, and under which the contract in question was made. But, on more mature reflection, after hearing additional argument, we are satisfied that such a result did not necessarily follow." The opinion then referred to the Act passed by the Legislature of Iowa in 1858, by which it was declared that it should be competent and lawful for the counties owning swamp and overflowed lands to devote the same, or the proceeds thereof, either in whole or in part, to the erection of public [188] buildings for the purpose of education, for the building of bridges, roads, and highways, and for building institutions of learning, or for making railroads through the county or counties to which such lands belonged. The opinion then proceeded: "The contract in dispute was made under this law, and our first impression was that it introduced a scheme subversive of the trust imposed upon the State by the Act of Congress; that its effect was to devote the lands and proceeds thereof to purposes different from those which the original grant was intended to secure; that it threw off, or endeavored to throw off, all public responsibility in relation to the trust; and hence that the scheme itself and the contract based upon it were void. But a reconsideration of the subject has brought us to a contrary conclusion. The argument against the validity of the scheme is that it effects a diversion of the proceeds of the lands from the objects and purposes of the congressional grant. These were declared to be to enable the State to reclaim the lands by means of levees and drains. The proviso of the second section of the Act of Congress declared that the proceeds of the lands, whether from sale or direct appropriation in kind, should be applied exclusively, as far as necessary, to these purposes. This language implies that the State was to have the full power of disposition of the lands; and only gives direction as to the application of the proceeds, and of this application only 'as far as necessary' to secure the object specified. It is very questionable whether the security for the application of the proceeds thus pointed out does not rest upon the good faith of the State, and whether the State may not exercise its discretion in that behalf without being liable to be called to account, and without affecting the titles to the lands disposed of. At all events, it would seem that Congress alone has the power to enforce the conditions of the grant, either by a revocation thereof, or other suitable action, in a clear case of violation of the conditions. And, as the application of the proceeds to the named objects is only prescribed 'as far as necessary,' room is left for the exercise, by the State, of a large discretion as to the extent of the necessity. In the present case it is not shown by allegations in the bill, or otherwise (if such [189] a showing would be admissible), that any necessity existed for devoting the proceeds of the lands in question to the purposes of drainage. No case is shown as the basis of any complaint, even on the part of the General Government, much less on the part of the County of Adams, which voluntarily entered into the arrangement complained of. Our conclusion, therefore, is that this objection to the validity of the contract cannot prevail." The opinion then overruled the other grounds urged in favor of the plaintiff, reversed the decree below, and directed a decree to be entered dismissing the bill without prejudice to the right of the county to bring an action at law for any breach of the terms of the contract.

The provisions of the Swamp Land Act of 1850, and of the Iowa statutes in regard to the swamp lands, were again considered by this court in *Mills County* v. *Burlington & M. R. R. R. Co.* 107 U. S. 557 [27:578] at October Term, 1882, the opinion of the court being delivered by *Mr. Justice* Bradley. In that case reference was made to *American Emigrant Co.* v. *Wright County, supra*, and it was said that the contract there "was declared to be void for actual fraud of the grossest character," and that the question as to whether the disposition of the lands operated as a diversion of the fund, in violation of the original grant, was not fully considered. The opinion also referred to the case of *American Emigrant Co.* v. *Adams County, supra*, and quoted a large part of the extract above given from the opinion in that case, and then added: "Upon further consideration of the whole subject, we are convinced that the suggestion then made, that the application of the proceeds of these lands to the purposes of the grant rests upon the good faith of the State, and that the State may exercise its discretion as to the disposal of them, is the only correct view. It is a matter between two sovereign powers, and one which private parties cannot bring into discussion. Swamp and overflowed lands are of little value to the government of United States, whose principal interest in them is to dispose of them for purposes of revenue; whereas, the State Governments, being concerned in their settlement and improvement, in the opening up of roads and other public works through them, in the promotion of the public [190] health by systems of drainage and embankment, are far more deeply interested in having the disposal and management of them. For these reasons, it was a wise measure on the part of Congress to cede these lands to the States in which they lay, subject to the disposal of their respective Legislatures; and, although it is specially provided that the proceeds of such lands shall be applied, 'as far as necessary,' to their reclamation by means of levees and drains, this is a duty which was imposed upon and assumed by the States, alone, when they accepted the grant; and whether faithfully performed or not is a question between the United States and the States; and is neither a trust following the lands nor a duty which private parties can enforce as against the State."

These views were confirmed in the case of

Hagar v. *Reclamation District*, 111 U. S. 701, 713 [28: 569, 574] at October Term, 1883, where it was said of the Swamp Land Act of 1850 that the appropriation of the proceeds of the sale of the lands rested solely in the good faith of the State; and that its discretion in disposing of them was not controlled by the condition mentioned in the Act, as neither a contract nor a trust following the lands was thereby created.

In the case of *Louisiana* v. *United States*, 22 Ct. Cl. 284, the State of Louisiana sued the United States for claims arising under the five per cent Act of 1811, and under the Swamp Land Acts of 1850 and 1855, and had a judgment for both claims, amounting to $71,385.83, which was affirmed by this court, in *United States* v. *Louisiana*, 123 U. S. 32 [*ante*, 69]. In that case the United States interposed the defense of the limitation of six years as to the swamp land claim. The court of claims held that the action of the Commissioner of the General Land Office, under section 2 of the Act of 1855, in determining, on proof by the agent of the State, that any of the swamp land had, within the meaning of the Act, been sold by the United States, so as to bring into force the requirement that the purchase money should be paid over to the State, was necessary to a right of action for the money on the part of the State; and that, as such action in that case did not occur more than six years before the bringing of the suit, the limitation prescribed by section 1069 of the Revised Statutes did not apply. A set-off or counterclaim was interposed in that case by the United States, they alleging that the amount due by citizens of the State of Louisiana to the United States for the direct tax levied by the Act of August 5, 1861, 12 Stat. at L. 292, was a proper subject of set-off against the claim of the State in the suit. This contention of the United States was overruled by the court of claims, on the ground that the State had never assumed the payment of the tax assessed under the Act of 1861. On the appeal to this court by the United States, 123 U. S. 32 [*ante*, 69], it was said, in the opinion of the court, delivered by *Mr. Justice* Field, that the Statute of Limitations did not seem to have any application to the demand arising upon the Swamp Land Acts; and that, as the Commissioner of the General Land Office had not found and certified the amount due to the State from the sales of swamp lands until the 30th of June, 1885, and the suit was commenced in September, 1886, the limitation of the statute did not apply to the case. It was further held that the State was not liable for the taxes assessed under the Act of August 5, 1861, against the real property of private individuals in the State, and that the court of claims had jurisdiction of the action. Therefore the judgment was affirmed.

[191]

In accordance with the views of this court in the cases above cited, it must be held that the proceeds of the swamp lands are not subject to a property trust, either in the hands of the United States or in those of the State, in such sense that the claim of the United States upon the State for the overdue coupons on the Indian Trust bonds, involved in the present case, cannot be set off against the claim of the State to the swamp land fund.

Under the Act of 1850 the swamp lands are to be conveyed to the State as an absolute gift, with a direction that their proceeds shall be applied exclusively, as far as necessary, to the purpose of reclaiming the lands. The judgment of the State as to the necessity is paramount, and any application of the proceeds by the State to any other object is to be taken as the declaration of its judgment that the application of the proceeds to the reclamation of the lands is not necessary. By the 2d section of the Act of 1855 it is provided that the purchase money received by the United States for the swamp lands sold by them shall be paid over to the State. There is nothing in these provisions of the character of a property trust, and nothing to prevent the application, by the State, of the swamp land fund to general purposes. If the power exists anywhere to enforce any provisions attached to the grant, it resides in Congress, and not in the court.

[192]

The same views apply to the provision as to the five per cent fund, in the Act of 1811, that it shall be applied to laying out and constructing public roads and levees in the State, "as the Legislature thereof may direct;" and, as to both the five per cent fund and the swamp land fund, we are of opinion that neither of them is of such a character that the debt due to the United States by the State of Louisiana, for the overdue coupons on the Indian Trust bonds, cannot be set off against the fund which is in the hands of the United States. This being so, it follows that the limitation of section 1069 of the Revised Statutes is a bar against the recovery of the item of $13,602.71 of the five per cent fund, credited May 8, 1879, and that the amount of the set-off of $31,080, for coupons falling due up to November 1, 1887, on the Indian Trust bonds, is a valid set-off against the remaining $29,970, and is more than sufficient to extinguish that item.

It results from these views that the judgment of the Court of Claims must be reversed, and the case be remanded to that court, with a direction to enter a judgment in favor of the United States.

EMMA J. BLACKLOCK ET AL., *Appts.*, [96]
v.
JACOB SMALL ET AL.

(See S. C. Reporter's ed. 96-105.)

Jurisdiction of circuit court—action by assignee—decree dismissing suit.

1. The Circuit Court of the United States has no jurisdiction of a suit which is substantially by and for the benefit of one of the defendants, named therein, who was at the time of the commencement of the suit, and has since continued to be, a citizen of the same State with another defendant therein, against whom the substantial relief in the action is claimed.

2. An action to recover amount of a bond, and for a foreclosure of the mortgage given to secure it, and a sale of the mortgaged premises, is not within the jurisdiction of the circuit court, when brought by an assignee of the bond, in a case in which the assignor could not prosecute such a suit.

3. Where the circuit court ought to have dismissed a suit for want of jurisdiction, and not upon the merits, its decree dismissing it on the merits will be reversed, and the case remanded, with directions to dismiss the suit for want of jurisdiction.

[No. 148.]

Argued April 10, 11, 1888. Decided April 23, 1888.

APPEAL from a decree of the Circuit Court of the United States for the District of South Carolina, dismissing, on the merits, a suit to annul the payment in Confederate Treasury notes of a bond, and to re-establish the bond and the accompanying mortgage, and for payment of the bond and mortgage, and sale of the mortgaged premises. *Reversed, and case remanded, with directions to dismiss the suit for want of jurisdiction.*

The facts are fully stated in the opinion.

Messrs. **B. H. Rutledge** and *James Lowndes* for appellants:

Small knew he was dealing with a trustee.

Magwood v. *R. R. Bank*, 5 S. C. 391; *Shaw* v. *Spencer*, 100 Mass. 382; *Lowry* v. *Commercial & F. Bank*, Taney, C. C. Dec. 330, 333, 334, 336; *Hughes* v. *U. S.* 71 U. S. 4 Wall. 232 (18: 303).

He knew that this money was not legal tender, even under the Constitution of the Confederate States. He knew it was below par.

Ward v. *Smith*, 74 U. S. 7 Wall. 451 (19:209); *Horn* v. *Lockhart*, 84 U. S. 17 Wall. 581 (21: 660).

The entire transaction is an absolute nullity.

Hickman v. *Jones*, 76 U. S. 9 Wall. 201 (19: 553); *Dewing* v. *Perdicaries*, 96 U. S. 195, 196 (24: 655); *McBurney* v. *Carson*, 99 U. S. 570 (25: 381); *Frets* v. *Stover*, 89 U. S. 22 Wall. 207 (22: 771); *Glasgow* v. *Lipse*, 117 U. S. 333 (29: 902).

Statutes of Limitations do not apply to proceedings in equity.

Sullivan v. *Portland & K. R. R. Co.* 94 U. S. 811 (24: 326); *Brown* v. *Buena Vista County*, 95 U. S. 161 (24: 423).

The rule that the Statute of Limitations runs in favor of a direct trustee from the date when he did some act which broke the trust relation, of which the *cestui que trust* had notice, does not apply.

Story, Eq. Jur. 1520 *a*; *Riddle* v. *Riddle*, 5 Rich. Eq. 81; *Brockington* v. *Camlin*, 4 Strob. Eq. 196; *Moore* v. *Porcher*, Bail. Eq. 196; *Pettus* v. *Clawson*, 4 Rich. Eq. 101; *Speidel* v. *Henrici*, 120 U. S. 386 (30: 719).

In order that acquiescence and release or confirmation may be a good defense, the *cestui que trust* must be *sui juris*, and not *feme covert* or infant, must be fully acquainted with all the facts, and must be also apprised of the law, or how those facts would be dealt with if brought before a court of equity.

Lewin, Tr. 778; Hill, Tr. 382; *Cockerell* v. *Cholmeley*, 1 Russ. & M. 425; *S. C.* 3 Russ. 574.

A party is not estopped by silence, unless it has misled another to his hurt.

Philadelphia, W. & B. R. R. Co. v. *Dubois*, 79 U. S. 12 Wall. 64 (20:269); *Lowndes* v. *Chisholm*, 2 McCord, Ch. 463; *Snell* v. *Atlantic F. & M. Ins. Co.* 98 U. S. 90, 91 (25: 54, 55); *Hopkins* v. *Mazyck*, 1 Hill, Eq. 251; *Marsh* v. *Whitmore*, 88 U. S. 21 Wall. 181 (22: 482); *Dunlop* v. *Ball*, 6 U. S. 2 Cranch, 180 (2: 246); *Upton* v. *Tribilcock*, 91 U. S. 45 (23: 203); *Campbell* v. *Holt*, 115 U. S. 620 (29: 483).

When the suit is brought for a tortious taking or wrongful detention of the chattel, then the remedy accrues to the person who has the right of property or of possession at the time. *Deshler* v. *Dodge*, 57 U. S. 16 How. 631 (14: 1088).

The assignee of a chose in action may maintain a suit in the circuit court to recover possession of the specific thing, or damages for its wrongful caption or detention, though the court would have no jurisdiction of the suit if brought by assignors.

Bushnell v. *Kennedy*, 76 U. S. 9 Wall. 391 (19: 788).

Having obtained rightful jurisdiction of the parties and the subject matter of the action for one purpose, the court will make its jurisdiction effectual for complete relief.

Ober v. *Gallagher*, 93 U. S. 206 (23: 831); *Tayloe* v. *Merchants F. Ins. Co.* 50 U. S. 9 How. 390 (13: 187); *Ward* v. *Todd*, 103 U. S. 329 (26: 340); Story, Eq. § 64 *a*; *Quattlebaum* v. *Black*, 24 S. C. 55.

Jurisdiction is not ousted by the fact that one defendant, who has a like and several interest with the plaintiffs, is a citizen of the same State with the defendant against whom the plaintiffs make their contention.

Meyer v. *Delaware R. R. Const. Co.* 100 U. S. 457 (25: 593); *Barney* v. *Baltimore*, 73 U. S. 6 Wall. 282 (18: 825); *Williams* v. *Nottawa*, 104 U. S. 210 (26: 719); *Peninsular Iron Co.* v. *Stone*, 121 U. S. 632 (30: 1020); *Grover & B. S. M. Co.* v. *Florence S. M. Co.* 85 U. S. 18 Wall. 553 (21: 914).

The foreclosure proceedings will be ancillary to the original suit; and such proceedings are maintainable without reference to the citizenship or residence of the parties.

Krippendorf v. *Hyde*, 110 U. S. 276 (28: 145); *Christmas* v. *Russell*, 81 U. S. 14 Wall. 82 (20: 763); *Jones* v. *Andrews*, 77 U. S. 10 Wall. 331 (19: 936); *Pacific R. R. Co.* v. *Missouri Pac. R. Co.* 111 U. S. 522 (28: 504); *Dewey* v. *West Fairmount Gas Coal Co.* 123 U. S. 333 (*ante*, 181).

Wherever a person acts or is restrained from acting by misdirection of law, which misleads him into the belief that he has no rights whatever in the premises, such omission to act cannot be charged against him, on a question of laches, for the purpose of preventing him from asserting his rights when he discovers the mistake, so as to bar relief in equity. In case of mistake of fact there is no doubt.

1 Story, Eq. Jur. Bigelow's ed. 1886, § 140, note 13, p. 154; *Dunlop* v. *Ball*, 6 U. S. 2 Cranch, 180 (2: 246); *Marsh* v. *Whitmore*, 88 U. S. 21 Wall. 178 (22: 482).

Messrs. **James Simons** and **Samuel Lord**, for appellees:

If one of the parties on one side of the suit is a citizen of the same State with one or more of the parties on the other side, the federal courts have no jurisdiction.

Strawbridge v. *Curtis*, 7 U. S. 3 Cranch, 267 (2: 435); *New Orleans* v. *Winter*, 14 U. S. 1 Wheat. 91 (4: 44); *Susquehanna & W. V. R.R. & Coal Co.* v. *Blatchford*, 78 U. S. 11 Wall. 173 (20: 179); *Walden* v. *Skinner*, 101 U. S. 589 (25: 967); *Farni* v. *Tesson*, 66 U. S. 1 Black, 309 (17: 67).

Where a party claims in the federal court through an assignment of a chose in action, he must allege that the assignor, at the time suit was brought, was a citizen of a different State from that of defendant.

Bradley v. *Rhine*, 75 U. S. 8 Wall. 393 (19: 467) and cases cited; *Morgan* v. *Gay*, 86 U. S. 19 Wall. 81 (22:100); *Susquehanna & W. V. R. R. & Coal Co.* v. *Blatchford*, 78 U. S. 11 Wall. 172 (20: 179); *Corbin* v. *Blackhawk County*, 105 U. S. 659 (26: 1136).

The bill does not state the citizenship of Blacklock, the assignor, and that he could have maintained the suit.

Turner v. *Bank of North America*, 4 U. S. 4 Dall. 11 (1: 719); *Marshall* v. *Baltimore & O. R. R. Co.* 57 U. S. 16 How. 340, 341 (14: 964); *Dred Scott* v. *Sandford*, 60 U. S. 19 How. 393 (15: 691); *Bradley* v. *Rhine*, 75 U. S. 8 Wall. 393 (19: 467); *Peninsular Iron Co.* v. *Stone*, 121 U. S. 631 (30: 1020); *King Iron Bridge & Mfg. Co.* v. *Otoe County*, 120 U. S. 225 (30: 623); *Pepper* v. *Fordyce*, 119 U. S. 469 (30: 435); *Bors* v. *Preston*, 111 U. S. 252 (28: 419); *Grace* v. *American Cent. Ins. Co.* 109 U. S. 278 (27: 932).

Small never made any of the payments in Confederate money, but in his check on the state bank, where he had never deposited any Confederate money up to the time of giving these checks.

Glasgow v. *Lipse*, 117 U. S. 335 (29: 903); *Donnelly* v. *District of Columbia*, 119 U. S. 339 (30: 465).

See, as to payments in bank bills when current, *Legal Tender Case*, 110 U. S. 445 (28: 213).

The claim made by this bill is a stale claim.

Smith v. *Clay*, 3 Bro. Ch. 639, *n*; *Piatt* v. *Vattier*, 34 U. S. 9 Pet. 415, 416 (9: 177); *Badger* v. *Badger*, 69 U. S. 2 Wall. 93 (17: 838); *Maxwell* v. *Kennedy*, 49 U. S. 8 How. 210 (12: 1051); *Bowman* v. *Wathen*, 42 U. S. 1 How. 189 (11: 97, 93); *Sullivan* v. *Portland & K. R. R. Co.* 94 U. S. 811 (24: 326); *Hall* v. *Law*, 102 U. S. 467 (26:219); *Burke* v. *Smith*, 83 U. S. 16 Wall. 401 (21:365); *Godden* v. *Kimmell*, 99 U. S. 201, 210, 212 (25: 431, 434, 435); *Hunt* v. *Smith*, 3 Rich. Eq. 465; *Hume* v. *Beale*, 84 U. S. 17 Wall. 336 (21: 602); *Hoyt* v. *Sprague*, 103 U. S. 636 (26: 594).

The claim is barred by the Statute of Limitations.

Van Rhyn v. *Vincent*, 1 McCord, Ch. 310; *Prescott* v. *Hubbell*, 1 Hill, Eq. 212; *Eigleberger* v. *Kibler*, Id. 113; *Farr* v. *Farr*, Id. 387; *Turnbull* v. *Gadsden*, 2 Strobh. Eq. 13; *Beck* v. *Searson*, 8 Rich. Eq. 130; *Lott* v. *De Graffenried*, 10 Rich. Eq. 350; *Kibler* v. *McIlwain*, 16 S. C. 555.

[97] *Mr. Justice* **Blatchford** delivered the opinion of the court:

This is a bill in equity, filed on the 8th of October, 1879, in the Circuit Court of the United States for the District of South Carolina, by Emma Jane Blacklock and Mary Blacklock, citizens of Georgia, against Jacob Small, a citizen of South Carolina, Alexander Robertson, a citizen of North Carolina, and Helen Robertson Blacklock, a citizen of South Carolina.

The substance of the allegations of the bill is that, on the 20th of March, 1860, John F. Blacklock, the father of the plaintiffs, owning a house and lot in the city of Charleston, in the State of South Carolina, sold and conveyed it to the defendant Small, who, on the same day, gave back to Blacklock a bond and mortgage,—the mortgage covering the house and lot, and being given to secure the payment on the bond of the sum of $10,600, by three equal and successive annual installments, the first one payable on the 20th of March, 1861, with interest from the date of the bond and mortgage, payable annually; that the purchase money of the house and lot was $16,000, of which $5,400 was paid in cash at the time; that Blacklock, the mortgagee, after receiving from Small, on the 19th of March, 1861, $742 for one year's interest, at 7 per cent, on the bond, indorsed on it the following assignment: [98]

"For value received I hereby assign, transfer, and set over all my right, title, and interest in this bond to Alexander Robertson, in trust for children of J. F. Blacklock. J. F. Blacklock."

That the assignee was the defendant Robertson, and the "children of J. F. Blacklock were the plaintiffs and the defendant Helen Robertson Blacklock; that Small pretended to pay the bond by making payments to Robertson as follows. on the 19th of October, 1861, $3,600 on account of principal and $147 for interest; on the 4th of April, 1862, $2,000 on account of principal and $490 for interest; and on the 10th of April, 1862, the balance of the principal and interest, making such payments in the treasury notes of the Confederate States; that upon the receipt thereof Robertson satisfied the mortgage and delivered up the bond to Small; that, at the time of the creation of the trust in the hands of Robertson, the children of Blacklock were infants; that in May, 1861, Blacklock went with the children to England, and remained there until the close of the war; that Robertson, in receiving such payments in the treasury notes of the Confederate States, violated his duty and was guilty of a breach of trust; that Small, in attempting to pay the debt in an illegal currency, with full notice of the trust, had not paid the debt; that the satisfaction of the mortgage was void, and its lien was still subsisting; and that Small was still liable for the amount due on the bond, with interest.

The prayer of the bill is that the payment of the bond in Confederate treasury notes may be disallowed; that the satisfaction of the mortgage may be annulled, and the mortgage be reestablished and declared a subsisting lien on the land; that Small may be ordered to deliver up the bond and mortgage to the plaintiffs; and that the plaintiffs may have a decree for the payment to them by Small of the amount due, and for a sale of the mortgaged premises.

Small appeared in the suit and interposed a plea that the court had no jurisdiction of the cause, because the plaintiffs as well as himself were citizens of South Carolina when the bill was filed. On issue joined on this plea, it was overruled, and Small put in an answer to the bill, as did also Robertson. [99]

The defendant Helen Robertson Blacklock put in an answer, admitting the allegations of the bill, and averring that Robertson held the bond and mortgage as a trustee for herself and her sisters, in whom was the real and actual interest therein: that the attempted payment by Small was without legal effect; that the bond and mortgage were still the property of the defendant and her sisters; and that she joins in the prayer of the bill that the pretended payments of the bond, by Small to Robertson,

and the satisfaction entered on the mortgage, be declared null and void; that the bond and mortgage be declared valid and subsisting obligations of Small to Robertson, as the trustee of a trust for the benefit of the defendant and her sisters; and that Small be decreed to pay the defendant and the plaintiffs the amount of money secured by the bond and mortgage.

Under replications to the answers, proofs were taken by the several parties. The case was heard on its merits, and a decree was made dismissing the bill, with costs. From this decree the plaintiffs and the defendant Helen Robertson Blacklock have appealed to this court.

[103] It appears by the proofs in the record that John F. Blacklock, the assignor of the bond, was, at the time of the assignment, a citizen of South Carolina, and continued to be such until this suit was commenced, and that the defendant Small was, when this suit was commenced, a citizen of South Carolina. Under these circumstances the provision of the first section of the Act of Congress of March 3, 1875, chap. 137, 18 Stat. at L. 470, applies to this case. That provision is as follows: "Nor shall any circuit or district court have cognizance of any suit founded on contract in favor of an assignee, unless a suit might have been prosecuted in such court to recover thereon if no assignment had been made, except in cases of promissory notes negotiable by the law merchant, and bills of exchange."

The present suit is a suit against Small, founded on contract, namely, his bond and mortgage in favor of the plaintiffs, who claim only under the assignment made by their father, John F. Blacklock, to the defendant Robertson. John F. Blacklock could not have prosecuted this suit in the Circuit Court of the United States for the District of South Carolina, to recover on the bond and mortgage against Small, if he had made no assignment of the bond to Robertson; for the reason that he and Small were not citizens of different States when the suit was commenced, but were both of them at that time citizens of South Carolina.

In answer to this objection it is contended by the appellants that this suit is not to be regarded as a suit founded on the contract of Small, to recover thereon, but is to be regarded as a suit for the delivery of the bond and mortgage by Small to the plaintiffs, founded on their wrongful detention, and that the rest of the relief prayed by the bill is ancillary and incidental; and the cases of *Deshler* v. *Dodge*, 57 U. S. 16 How. 622 [14: 1084], and *Bushnell* v. *Kennedy*, 76 U. S. 9 Wall. 387 [19:736], are cited as authorities; but they do not apply.

The case of *Deshler* v. *Dodge* was an action of replevin, brought by a citizen of New York [104] against a citizen of Ohio, in the Circuit Court of the United States for the District of Ohio, to recover possession of a package of bank bills. The title of the plaintiff to the contents of the package was derived by assignment from corporations of Ohio. This court held that the action could be maintained, although the assignors could not have brought the suit, and that the suit was not one to recover the contents of a chose in action, within the meaning of section 11 of the Judiciary Act of September 24, 1789.

In *Bushnell* v. *Kennedy* it was said, though not determined, because not necessary to that case, that the provision of the 11th section of the Judiciary Act of 1789 did not apply to a naked right of action founded on a wrongful act or a neglect of duty, to which the law attached damages.

In the present case, the bill is clearly one for a decree against Small for the amount of the bond, and for a foreclosure of the mortgage and a sale of the mortgaged premises.

There is another difficulty in the case, on the question of jurisdiction. The bond was a unit; the mortgage was a unit; and the assignment of the bond by Blacklock to Robertson in trust for the children of Blacklock was a unit. The bond cannot be enforced against Small, nor can the mortgaged premises be sold, in favor of the two plaintiffs alone. The relief asked in the suit must necessarily be for the benefit of the defendant Helen Robertson Blacklock, as well as for the benefit of the plaintiffs, especially as, by her answer, she ranges herself on the side of the plaintiffs as against Small, joins in the prayer of the bill, and asks that the payment of the bond and the satisfaction of the mortgage be declared void, and that the bond and mortgage be declared valid in the hands of Robertson as trustee for the benefit of herself and the plaintiffs, and that Small be decreed to pay to herself and the plaintiffs the amount of money secured by the bond and mortgage, with interest. The suit is therefore shown to be one substantially by and for the benefit of Helen Robertson Blacklock, and the proofs show that, at the time of the commencement of the suit, she was, and has since then always continued to be, a citizen of South Carolina, of which State Small was and is a citizen. *Ayres* v. *Wiswall*, 112 U. S. 178 [28:698]; *Thayer* v. *Life Asso.* 112 U. S. [105] 717 [28:864]; *New Jersey Cent. R. R. Co.* v. *Mills*, 113 U. S. 249 [28:949]; *Louisville & N. R. R. Co.* v. *Ide*, 114 U. S. 52 [29:63].

The circuit court ought therefore to have dismissed the bill for want of jurisdiction, and not upon the merits. For this error its *decree is reversed, with costs in this court against the appellants*, because the reversal takes place on account of their fault in invoking the jurisdiction of the circuit court when they had no right to resort to it,—*Mansfield, C. & L. M. R. Co.* v. *Swan*, 111 U. S. 379, 388, 389 [28:462, 466],—*and the case is remanded to the Circuit Court, with a direction to dismiss the bill for want of jurisdiction, without costs of that court.*

FRANKLIN C. SMITH, *Appt.*, [105]

v.

BOARD OF COUNTY COMMISSIONERS OF BOURBON COUNTY, KANSAS, AND BOURBON COUNTY, KANSAS.

(See S. C. Reporter's ed. 105-113.)

Action to subject county bonds to the payment of a judgment—mandamus—decree—legal right—jurisdiction—circuit court—decree of dismissal.

1. In an action by a judgment creditor of a railroad company, to require the company to assign to

complainant its claim against the county for bonds of the county, and to require the county to sign and deliver to the complainant such bonds in payment of the judgment,—*Held*, that the only remedy which the company had against the county to compel the issuing and delivering of the bonds was by *mandamus*.

2. *Held*, also, that complainant can have no greater rights against the county than the railroad company has, and that relief by *mandamus* cannot be granted in equity, but only at law.

3. *Held*, also, that a decree might be justified against the railroad company for an assignment of its right to the bonds, and requiring the railroad company to permit the use of its name for their recovery by the appropriate proceeding at law.

4. The right to proceed against the county is a purely legal right, and can only be prosecuted at law, notwithstanding the equitable nature of the complainant's rights as against the railroad company.

5. To give a court of equity jurisdiction, the nature of the relief asked must be equitable, even when the suit is based on an equitable title.

6. Section 716, Revised Statutes, construed in connection with sections 1 and 2 of the Act of 1875, operates to prevent the issuing, by the United States Circuit Court, of a writ of *mandamus*, except in aid of a jurisdiction previously acquired by that court; and therefore no application could be entertained in that court for a *mandamus* against the county at the suit of the railroad company.

7. Where the relief sought cannot be granted in equity, and the circuit court is without jurisdiction to grant the relief, it cannot decide the case on its merits; and a decree, dismissing the bill generally, will be modified so that the dismissal shall be without prejudice to complainant's rights to proceed at law.

[No. 193.]

Submitted Feb. 17, 1888. Decided April 23, 1888.

APPEAL from a decree of the Circuit Court of the United States for the District of Kansas, dismissing a suit to subject to the satisfaction of a judgment against a railroad company an alleged indebtedness of a county to the judgment debtor. *Decree modified, so as to dismiss the suit without prejudice as against the county, and retaining the suit, if complainant elects, and shows title to relief against the rail road company alone.*

Statement by *Mr. Justice* **Matthews:**

[106] This is a bill in equity filed January 28, 1880, in the nature of a creditor's bill. The appellant was the complainant below, and in December, 1879, recovered a judgment at law in the Circuit Court of the United States for the District of Kansas for $267,113.19, besides costs, against the Fort Scott, Humboldt and Western Railroad Company, on which judgment an execution has been issued and returned unsatisfied, the defendant corporation being insolvent. The object of the present bill is to subject to the satisfaction of this judgment an alleged indebtedness of Bourbon County, Kansas, to the judgment debtor, the Fort Scott, Humboldt and Western Railroad Company. That indebtedness consists in a supposed legal obligation on the part of the Board of Commissioners of Bourbon County to issue and deliver to the Fort Scott, Humboldt and Western Railroad Company municipal bonds of the County in payment of a subscription of stock in the sum of $150,000. The obligation to issue and deliver these bonds is alleged to arise upon the following facts:

On July 23, 1869, the Board of Commissioners of Bourbon County made an order, submitting a proposition to the voters of the county for the subscription of stock and the issuing of bonds of said County in the sum of $150,000, to secure the construction of a railroad from Fort Scott westwardly, north of the Marmaton River, in the general direction of Humboldt, in Allen County.

This order directed "that there be subscribed, in the name and for the benefit of the County of Bourbon, in the State of Kansas, $150,000 to the capital stock of any railroad company now organized, or that shall be organized hereafter, that shall construct a railroad commencing at the city of Fort Scott, in the county and State aforesaid, running from thence west, north of the Marmaton River, upon the most practical route in the general direction of Humboldt, Allen County, Kansas; and that the bonds of said County be issued to said company for the payment of said subscription, said bonds to be payable within thirty years from the date thereof, and bearing interest payable semi-annually at the rate of seven per centum per annum; *Provided*, That said bonds shall [107] not be issued until the question shall have been submitted to a vote of the qualified electors of the county of Bourbon aforesaid, and shall have received a majority of the votes cast upon said proposition in favor thereof, in pursuance of the provisions of the statutes in such cases made and provided; and that said question shall be submitted to said electors at a special election on Tuesday, the 24th day of August, A. D. 1869. At said election the votes shall be cast 'for railroad bonds' and 'against railroad bonds,' and if it shall appear, upon a canvass of the votes cast at said election, by proper officers, according to law, that a majority of the votes cast upon said election are in favor of said subscription, then the said order shall be carried into practical operation by the issuing of said bonds to the said company whenever the County Commissioners of Bourbon County are satisfied that the bonds herein provided for, with the other resources of the said company, shall be sufficient and adequate to complete the construction of the roadbed, ready for the iron, from the city of Fort Scott to the west line of Bourbon County," etc.

There was no record of the notice of the election preserved or filed in the clerk's office; but as a fact the proof showed that the notice of the election was first given on July 28, 1869, by publication in the Fort Scott Monitor, a weekly newspaper published at Fort Scott in said county, and for three successive weeks thereafter, the last publication being on August 18th, and the election on the 24th day of August. On August 27th the vote was duly canvassed by the Board of Commissioners, and was ascertained to be in favor of the subscription and issuing of bonds by a majority of over 700. In October, 1870, more than a year after the bonds were voted, the Fort Scott and Allen County Railroad Company was organized, under the general laws of the State of Kansas, for the purpose of building a railroad from Fort Scott westwardly, on the north of the Marmaton River, in the general direction named in the order under which the election was held. The corporators and directors of this railroad were composed largely of citizens of Bourbon County.

Soon after the organization of said railroad [108] company the Commissioners of Bourbon Coun-

ty appointed Joseph S. Emmert agent for the County to subscribe for and in the name of the County $150,000 of stock in said company, under the authority of the election held August 24, 1869, with the proviso that the company complete its roadbed, ready for the iron, from Fort Scott to the western line of the county, by the 1st day of July, 1872. This agent subscribed to the capital stock of the company in the amount above stated in the name of the County, as authorized by said order of appointment; and the said 1,500 shares of stock were, at various meetings of the stockholders of the company, represented and voted, either by the chairman of the county board or by some other person authorized thereto. On June 6, 1871, Franklin C. Smith, the complainant, made a contract with the railroad company to grade the roadbed from Fort Scott to Humboldt, about 23 miles, and to construct all necessary bridges, culverts, etc., for which he was to be paid in part by $125,000 of the bonds of Bourbon County to be issued in payment of its subscription. Before making the contract he had assurances from two of the county commissioners that the bonds had been legally and regularly voted, and that they would be issued on the completion of his contract. On July 28, 1871, on application of the railroad company, the Board of County Commissioners ordered the bonds to be prepared and signed by the chairman, and deposited in the safe of the treasurer's office to await further order, which was accordingly done. The roadbed was completed ready for the iron, in substantial compliance with the terms of the subscription, by the time named, to wit, July 1, 1872. In June, 1872, after the work was done, the railroad company demanded the bonds of the county board, which demand was not granted. In August following, another demand was made by the railroad company, which was refused. The commissioners then ordered the bonds to be destroyed, which was in fact done. The County Commissioners made no objection to the delivery of the bonds on the ground that the resources of the company, together with these bonds, were not sufficient to construct the roadbed. The name of the railroad company, [109] after its organization, was changed to the Fort Scott, Humboldt and Western Railroad Company. The company never filed any profile or map of its route in the clerk's office of the County, nor did it secure or pay for the right of way along its line, with the exception of about eight miles.

The circuit court dismissed the bill, holding that the County Commissioners were under no legal obligation to issue the bonds to the railroad company, and were not indebted to the railroad company by reason of its failure to issue them, because (1) the order of submission under which the election was had was illegal and void, for the reason that no railroad company was named in the order, nor was the company at that time in existence; (2) the notice of the election was insufficient and illegal, because it was not given thirty days before the election; (3) the County was not estopped to deny its obligation by the proceedings of the Board of Commissioners, or the representations and assurances of the individual members. The correctness of this conclusion is questioned by the present appeal.

Messrs. **A. L. Williams, Rossington & Smith,** and **H. E. Long,** for appellant:

The County Commissioners having determined that an election had been carried in favor of the subscription, their decision is final and conclusive.

State v. *Allen*, 5 Kan. 213; *Knox County* v. *Aspinwall*, 62 U. S. 21 How. 539 (16:208); *Bissell* v. *Jeffersonville*, 65 U. S. 24 How. 287 (16:664); *Hadley* v. *Mayor of N. Y.* 33 N. Y. 603; *People* v. *Greene County*, 12 Barb. 217; *Bell* v. *Pike*, 53 N. H. 473; *Arberry* v. *Beavers*, 6 Tex. 457; *Oglesby* v. *Sigman*, 58 Miss. 503; *People* v. *Schenectady County*, 35 Barb. 408; *Shelby County Ct.* v. *Cumberland & O. R. R. Co.* 8 Bush, 209; *Douglas County* v. *Bolles*, 94 U. S. 104 (24: 46).

The location of the road is not a condition precedent to submitting the question of subscription to a vote of the qualified electors of the county, and it was not necessary to insert the name of the company constructing the road.

Johnson County v. *Thayer*, 94 U. S. 631 (24: 133); *Cass County* v. *Johnston*, 95 U. S. 360 (24: 416); *Daviess* v. *Huidekoper*, 98 U. S. 98 (25: 112); *Block* v. *Bourbon County*, 99 U. S. 686 (25: 491).

Every act required to be done by the County and the railroad and the complainant has been fully performed, except the mere execution and delivery of the bonds. The complainant did the work upon the assurance that the bonds would be executed and delivered when the work was completed; and the County is now estopped from claiming that the vote was not legal, and from making the other defenses set up. Complainant was ignorant of any irregularity, and expended large sums of money and a large amount of labor in completing the road. He acted in good faith, and in fact lost all the property he had in this transaction.

People v. *Logan County*, 63 Ill. 374; Bigelow, Estop. 464; *People* v. *Cline*, 63 Ill. 398; *Logan County* v. *Lincoln*, 81 Ill. 156; *Chicago* v. *Chicago & W. I. R. R. Co.* 105 Ill. 73; *Cook County* v. *Harms*, 108 Ill. 151; *Meister* v. *Birney*, 24 Mich. 435; *Grissler* v. *Powers*, 81 N. Y. 57; *Andrews* v. *Ætna L. Ins. Co.* 85 N. Y. 334; *Bissell* v. *Jeffersonville*, 65 U. S. 24 How. 299 (16:672); *Zabriskie* v. *Cleveland, C. & C. R. R. Co.*, 64 U. S. 23 How. 400 (16: 497); *Meyer* v. *Muscatine*, 68 U. S. 1 Wall. 384 (17: 564); *Pendleton County* v. *Amy*, 80 U. S. 13 Wall. 298 (20:579); *Anderson County* v. *Beal*, 113 U. S. 227 (28:966); *Block* v. *Bourbon County*, 99 U. S. 686 (25:491); *Moran* v. *Miami County*, 67 U. S. 2 Black, 722 (17:342); *Randolph County* v. *Post*, 93 U. S. 502 (23:957); *Shelby County Ct.* v. *Cumberland & O. R. R. Co.* 8 Bush, 209; *Evansville, I. & C. S. L. R. R. Co.* v. *Evansville*, 15 Ind. 395; *Knox County* v. *Aspinwall*, 62 U. S. 21 How. 539 (16:208); *Brittain* v. *Kinnaird*, 1 Brod. & Bing. 432; *Betts* v. *Bagley*, 12 Pick. 572; *Martin* v. *Mott*, 25 U. S. 12 Wheat. 19 (6:537); *Vanderheyden* v. *Young*, 11 Johns. 150; *Birdsall* v. *Phillips*, 17 Wend. 465; *Ex parte Watkins*, 28 U. S. 3 Pet. 193 (7:650); *People* v. *Rochester*, 21 Barb. 656.

That the board indorsed upon the bonds that the conditions upon which they were issued had been complied with, was conclusive upon the municipality.

Coloma v. *Eaves*, 92 U. S. 484 (23:579); *Humboldt Twp.* v. *Long*, Id. 642 (23:752).

Mr. **E. M. Hulett**, for appellees:

The proposition submitted to the voters was not to authorize the subscription of stock to any railroad company in existence or organized; therefore any subscription made in pursuance of such election was void for lack of power on the part of the Commissioners.

Lewis v. *Bourbon County*, 12 Kan. 186-202, and cases there cited; *Rubey* v. *Shain*, 54 Mo. 207.

Notice must be given, as required by statute, to empower municipal officers to contract for stock, and the County will not be estopped from pleading insufficient notice.

People v. *Jackson County*, 92 Ill. 441, 453; 454; *Wiley* v. *Silliman*, 62 Ill. 170; Dill. Mun. Corp. 3d ed. § 197; *Detroit, E. R. & I. R. R. Co.* v. *Bearss*, 39 Ind. 603, 604.

Though subscription was actually made, it does not affect the fact that notice was insufficient.

People v. *Santa Anna*, 67 Ill. 57; *Law* v. *People*, 87 Ill. 385.

Nor can third parties acquire greater rights than the corporation.

Lamoille Valley R. R. Co. v. *Fairfield*, 51 Vt. 257; *People* v. *Oldtown*, 88 Ill. 202.

Statutory notice is requisite to the validity of the bonds issued.

McClure v. *Oxford Twp.* 94 U. S. 429 (24:129).

The cases of *McClure* v. *Oxford Twp.* and *Crow* v. *Oxford Twp.* 119 U. S. 215 (30:388), are decisive of this case, if adhered to.

Mr. Justice **Matthews** delivered the opinion of the court:

The prayer of the bill is for a decree, in the first place, against the Fort Scott, Humboldt, and Western Railroad Company, which is a defendant, ordering it to assign to the complainant its claim against the County of Bourbon, and, in the second place, for a decree against Bourbon County and its Board of County Commissioners, ordering the latter to sign and issue in due form the bonds of said County in the sum of $150,000, payable in thirty years from the date thereof, with semi-annual interest coupons attached, in accordance with the terms of the subscription to the capital stock of the railroad company, and deliver the same to the complainant to be credited at their face value upon his judgment against the railroad company; and for general relief.

The relief prayed for does not include a decree [110] against the County of Bourbon for the payment of money, and there is no foundation for such a prayer in the allegations of the bill. It does not charge that the County is indebted in any sum of money presently payable by virtue of its subscription to the capital stock of the railroad company. The legal obligation arising on that subscription is purely statutory, if the subscription itself be valid and binding; and the statutory obligation is satisfied by the issue and delivery to the railroad company of the bonds of the County in payment of the subscription. On the supposition that the subscription creates a legal obligation for its payment in bonds, the refusal of the Commissioners of the County to issue and deliver the bonds, however wrongful, is not a breach of the obligation of the County which would give rise to an action against it for the recovery of damages. The breach of obligation in such a case would consist simply in the refusal on the part of the Commissioners of the County to perform a ministerial duty, the only remedy for which would be a proceeding at law in the name of the railroad company by a writ of *mandamus*. That writ, if granted in a direct proceeding therefor by a proper judgment, would be directed against the officers of the County, and would command the performance of the specific duty which they had refused to perform, and would give to the company the precise and specific relief to which it would be entitled.

The complainant in the present case has and can have no other or greater rights against the County of Bourbon or its officers than are vested in the railroad company. The object of the bill is to subject to the satisfaction of the complainant's judgment against the railroad company the rights of the latter against the County of Bourbon and its officers. The proceeding for that purpose cannot change these rights, nor convert a right to require the delivery of the bonds into a claim for damages for their nondelivery.

It is clear that such relief as is alone suitable and adequate to the case cannot be granted in equity. If the proceeding were in the name [111] and on behalf of the railroad company itself, it would, as we have already stated, be at law in *mandamus*. That the complainant claims to be equitably entitled to be substituted for the railroad company in its rights against Bourbon County may entitle it to a decree against the railroad company for an assignment of its claim, so as to confer upon the complainant the right to use the name of the railroad company in a proceeding against the County and its Commissioners; but it does not enlarge the rights of the railroad company against the County and its officers, nor change the remedy so as to enable a court of equity to entertain proceedings in *mandamus*. The bill might justify a decree against the railroad company for an assignment of its right to the bonds and requiring the railroad company to permit the use of its name for their recovery by the appropriate proceeding at law. The right to proceed against the County and its Commissioners remains still a purely legal right, and can only be prosecuted at law, notwithstanding the equitable nature of the complainant's rights as against the railroad company.

As was said in *Hayward* v. *Andrews*, 106 U. S. 672, 675 [27:271, 272]: "If the assignee of the chose in action is unable to assert in a court of law the legal right of the assignor, which in equity is vested in him, then the jurisdiction of a court of chancery may be invoked, because it is the proper forum for the enforcement of equitable interests, and because there is no adequate remedy at law; but when, on the other hand, the equitable title is not involved in the litigation, and the remedy is sought merely for the purpose of enforcing the legal right of his assignor, there is no ground for an appeal to

equity because, by an action at law in the name of the assignor, the disputed right may be perfectly vindicated and the wrong done by the denial of it fully redressed. To hold otherwise would be to enlarge the jurisdiction of courts of equity to an extent the limits of which could not be recognized, and that in cases where the only matter in controversy would be purely legal rights." "To give a court of equity jurisdiction," as was said by *Mr. Justice* Woods, delivering the opinion of the court in *Fussell* v. *Gregg*, 113 U. S. 550, 554 [28: 993, 994], "the nature of the re-
[112] lief asked must be equitable, even when the suit is based on an equitable title." This rule was applied in *New York Guaranty & I. Company* v. *Memphis Water Company*, 107 U. S. 205 [27: 484], where it was said that it was entitled to special consideration from the courts of the United States.

It follows from this view that the distinction in the jurisdiction of the courts of the United States between proceedings at law and in equity would limit the relief of the complainant under the present bill to a decree against the railroad company investing the complainant with its rights and the use of its name in a proceeding to enforce by *mandamus* the issue and delivery of the bonds alleged to be wrongfully withheld.

The necessity for thus limiting the relief becomes more stringent as well as obvious from another consideration. In the case of *Rosenbaum* v. *Bauer*, 120 U. S. 450 [30:743], it was decided by this court, upon much deliberation, that section 716 of the Revised Statutes, giving power to a circuit court to issue all writs, not specifically provided for by statute, which may be necessary for the exercise of its jurisdiction and agreeable to the usages and principles of law, construed in connection with sections 1 and 2 of the Act of 1875, operates to prevent the issuing by the circuit court of a writ of *mandamus* except in aid of a jurisdiction previously acquired by that court. It is perfectly clear, under the decisions of this court, that no application could be entertained in the circuit court for a writ of *mandamus* directed against the County Commissioners of Bourbon County at the suit and in the name of the railroad company itself. The court would be without jurisdiction, and certainly that lack of jurisdiction cannot be supplied by converting the proceeding into a bill in equity, whether the proceeding be in the name of the railroad company for its own use, or in the name of the railroad company for the use of the complainant, its assignee, or in the name of the assignee himself. The objection is one of substance, and not merely of form. It cannot be waived, and it cannot be ignored.

It follows from this view that, so far as the bill sought the relief prayed for against Bourbon County and its Commissioners, the circuit
[113] court was without jurisdiction. In point of fact, however, it assumed jurisdiction, and decided the case on its merits. This, in our opinion, it had no authority to do. For that reason and to that extent the decree of the circuit court dismissing the bill generally must be modified so as to dismiss the bill as against the County of Bourbon and the County Commissioners of that County, without prejudice to the right of the complainant, on obtaining a proper assignment and authority from the railroad company, to proceed at law, in its name, to obtain the issue and delivery of the bonds described in the bill of complaint; and retaining the bill, if the complainant elects and shows itself entitled, as to the Fort Scott, Humboldt and Western Railroad Company, for relief against it alone, for an assignment of its right to the issue and delivery of the bonds of the County, and to the use of its name in a proceeding against the County and its Commissioners for the enforcement of such right.

It is accordingly so ordered.

ALBERT KELLEY AND LAWRENCE D. ALEXANDER, *Plffs. in Err.* [139]
v.
MAYOR AND ALDERMEN OF THE TOWN OF MILAN.

(See S. C. Reporter's ed. 139-160.)

Power of municipal corporation to issue bonds—Tennessee law—Act of 1871—Act of 1872—Consent decree, effect of—mayor's authority.

1. A municipal corporation, in order to become a stockholder in a railroad corporation, must have the power to do so expressly conferred upon it by the Legislature; and the power to subscribe for such stock does not carry with it the power to issue negotiable bonds in payment of the subscription, unless the power to issue such bonds is also conferred by statute.

2. Sections 1142-1161 of the Tennessee Code, giving power to a municipal corporation to subscribe for stock in railroads, do not authorize the issue of negotiable bonds.

3. The Tennessee Act of January 23, 1871, does not confer any authority for the giving or loaning of credit upon any municipality, or confer the right upon any municipality to become a stockholder with others in any corporation.

4. The Tennessee Act of March 23, 1872, authorized the issuing of bonds for matured debts only; the liability on the subscription to the stock was not such a matured debt of the Town, in this case, at the time the election was held, as the Act of 1872 refers to.

5. The consent decree, introduced in this case, that the Town shall issue bonds and that the bonds shall be valid, was no adjudication by the court of the validity of the bonds, on the submission to it, as a judicial tribunal, of the question of such validity.

6. The consent or agreement of the Mayor could give no validity to the bonds. The want of authority to issue them extended to a want of authority to declare them valid. The Mayor had no such authority.

[No 206.]

Argued April 4, 5, 1888. Decided April 23, 1888.

IN ERROR to the Circuit Court of the United States for the Western District of Tennessee, to review a judgment for the defendant in an action to recover coupons of municipal bonds. *Affirmed.*

Reported below, 21 Fed. Rep. 842.

The facts are fully stated in the opinion.

Messrs. **John B. Henderson** and **Holmes Cummins**, plaintiffs in error:

Where bonds recite that they are issued under a valid law authorizing the issue thereof, the law presumes that all prerequisite facts have been complied with. A *bona fide* purchaser is authorized to rely on the recitals, and he cannot be affected by any irregularities in the issue.

Humboldt Twp. v. *Long*, 92 U. S. 642 (23:752); *Marcy* v. *Oswego Twp.* Id. 637 (23:748); *Moultrie*

County v. *Rockingham Sav. Bank*, Id. 631 (23: 631); *Walnut* v. *Wade*, 103 U. S. 683 (26:526).

A recital in the bonds that they are issued in compliance with law estops the municipality from asserting the contrary.

Oregon v. *Jennings*, 119 U. S. 95 (30:330).

Plaintiff became the holder for value.

Pana v. *Bowler*, 107 U. S. 529 (27:424); *Harter* v. *Kernochan*, 103 U. S. 562 (26:411).

The *bona fide* holder has a right to assume that such things did exist, if certified on the face of the bonds.

Lynde v. *Winnebago County*, 83 U. S. 16 Wall. 6 (21:272); *Johnson County* v. *January*, 94 U. S. 202 (24:110); *Coloma* v. *Eaves*, 92 U. S. 484 (23:579); *Douglas County* v. *Bolles*, 94 U. S. 104 (24:46); *Warren County* v. *Marcy*, 97 U. S. 96 (24:977); *American L. Ins. Co.* v. *Bruce*, 105 U. S. 328 (26:1121).

A *bona fide* holder of negotiable paper for value before maturity takes it freed from all infirmities in its origin, unless it is absolutely void for want of power in the maker.

Cromwell v. *Sac County*, 96 U. S. 51 (24:681).

The cases in this court which are erroneously supposed to contradict the rulings referred to will be found, on examination, to involve the issue of bonds wholly without authority and against positive law.

Anthony v. *Jasper County*, 101 U. S. 693 (25: 1005); *Dixon County* v. *Field*, 111 U. S. 83 (28: 360); *Buchanan* v. *Litchfield*, 102 U. S. 278 (26: 138); *Northern Nat. Bank* v. *Porter Twp.* 110 U. S. 608 (28:258); *Marcy* v. *Oswego Twp.* 92 U. S. 637 (23:748); *Wilson* v. *Salamanca*, 99 U. S. 499 (25:330); *Rock Creek* v. *Strong*, 96 U. S. 271 (24:815).

The provisions touching time and interest were obviously directory and not of the essence of the power.

Marion County v. *Clark*, 94 U. S. 278 (24: 59); *East Lincoln* v. *Davenport*, Id. 801 (24: 822).

The acceptance and holding of a stock certificate, the issue and delivery of bonds therefor, and payment of interest for a time, cure defects in all matters of form, and a *bona fide* taker may assume that everything necessary to their validity has been done.

Johnson County v. *January*, 94 U. S. 202 (24: 110); *Douglas County* v. *Bolles*, Id. 104 (24:46); *Quincy* v. *Warfield*, 25 Ill. 317; *Johnson* v. *Stark County*, 24 Ill. 75; *Meyer* v. *Muscatine*, 68 U. S. 1 Wall. 384 (17:564); *Flagg* v. *Palmyra*, 33 Mo. 440; *Calhoun County* v. *Galbraith*, 99 U. S. 214 (25:410).

The Court of Chancery of Tennessee, having jurisdiction of the persons and subject matter involved, made a decree adjudging the validity of the bonds as issued; and as the present holder purchased them for value thereafter, they will not be declared void by this court.

Cooley, Const. Lim. 52; *Adams* v. *Memphis & L. R. R. Co.* 2 Coldw. 645; *Louisville & N. R. R. Co.* v. *State*, 8 Heisk. 780; *McCallie* v. *Chattanooga*, 3 Head, 317; *Seibert* v. *Pittsburg*, 68 U. S. 1 Wall. 272 (17:553).

If a contract, when made, was valid under the constitution and laws of a State as they had been previously expounded by its judicial tribunals, and as they were understood at the time, no subsequent action by the Legislature or the judiciary will establish its invalidity.

Olcott v. *Fond du Lac County*, 83 U. S. 16 Wall. 678 (21:382); *Ohio L. Ins. & F. Co.* v. *Debolt*, 57 U. S. 16 How. 416, 432 (14:997, 1003); *Kenosha* v. *Lamson*, 76 U. S. 9 Wall. 477, 485 (19:725); *Douglass* v. *Pike County*, 101 U. S. 677 (25: 968); *Taylor* v. *Ypsilanti*, 105 U. S. 60 (26: 1008); *New Buffalo Twp.* v. *Cambria Iron Co.* Id. 73 (26:1024).

The decree rendered in the chancery court is conclusive upon the rights of the parties.

Gifford v. *Thorn*, 9 N. J. Eq. 723; *Green* v. *Hamilton*, 16 Md. 329; *Jarvis* v. *Driggs*, 69 N. Y. 143; *Newton* v. *Hook*, 48 N. Y. 676; *Gates* v. *Preston*, 41 N. Y. 113; *White* v. *Merritt*, 7 N. Y. 355; *Cromwell* v. *Sac County*, 94 U. S. 356, 357 (24:199).

A consent decree bars any other suit between the parties on the cause of action stated.

Commonwealth v. *Rowan*, 3 Dana, 395; *Jarboe* v. *Smith*, 10 B. Mon. 257; *Dillard* v. *Harris*, 2 Tenn. Ch. 193; *Mayo* v. *Harding*, 3 Tenn. Ch. 237; *Greenlaw* v. *Kernahan*, 4 Sneed (Tenn.) 371; *Winchester* v. *Winchester*, 1 Head, 500; *Hopper* v. *Fisher*, 2 Head, 253; *McGavock* v. *Bell*, 3 Coldw. 518; *Kendell* v. *Titus*, 9 Heisk. 738; *Jones* v. *Williamson*, 5 Coldw. 371; *Williams* v. *Neil*, 4 Heisk. 279.

Mr. **Sparrel Hill**, for defendant in error:

Municipal corporations have no implied powers to become stockholders in railroad companies, but this power must be expressly conferred by legislative grant.

The power to subscribe for stock does not carry with it the power to issue negotiable bonds in payment of its stock subscription.

Milan v. *Tennessee Cent. R. R. Co.* 11 Lea, 330; *Green* v. *Dyersburg*, 2 Flip. 477; *People* v. *Mitchell*, 45 Barb. 208; *Marsh* v. *Fulton County*, 77 U. S. 10 Wall. 676 (19:1040); *Wells* v. *Pontotoc County*, 102 U. S. 626 (26: 122); *Claiborne County* v. *Brooks*, 111 U. S. 400 (28: 470).

The officers of a municipal corporation are special agents, possessing only powers specially delegated; and every act in excess of the power specially delegated is void.

1 Dill. Mun. Corp. § 89; *Floyd Acceptances*, 74 U. S. 7 Wall. 676 (19: 173); South. L. Rev. January, 1872, p. 17; *Mechanics Bank* v. *New York & N. H. R. R. Co.*, 13 N. Y. 632; *Marsh* v. *Fulton County*, *supra*.

When a municipal corporation is authorized to subscribe for a stock in a railroad company, no power to issue negotiable bonds in payment of the subscription exists without a special grant of this power.

Milan v. *Tennesee Cent. R. R. Co.* 11 Lea, 329; *Nashville* v. *Ray*, 86 U. S. 19 Wall. 468 (22: 164); *Wells* v. *Pontotoc County*, 102 U. S. 625 (26:122); *Claiborne County* v. *Brooks*, *supra*.

Statutes purporting to confer upon municipal corporations the power to issue bonds like these in controversy in this case must be strictly construed and pursued.

Green v. *Dyersburg*, 2 Flip. 477; *Milan* v. *Tennessee Cent. R. R. Co.* 11 Lea, 330; *Marsh* v. *Fulton County*, 77 U. S. 10 Wall. 676 (19:1040); 1 Dill. Mun. Corp. § 89.

The decree relied upon as *res judicata* is not binding as such. The Mayor had no authority to consent to it. The decree was collusive.

Manhattan L. Ins. Co. v. *Broughton*, 109 U. S. 125 (27:880).

Such a decree is wanting in the elements necessary to give it effect as *res judicata*.

Freem. Judg. § 250; Wells, Res Adjudicata, § 65; Whart. Ev. § 796 and notes; *Hicks* v. *Gosling*, 1 Leg. R. 560; *Dillard* v. *Harris*, 2 Tenn. Ch. 196; *Swayne* v. *Lyon*, 67 Pa. 436; *Hartfield* v. *Simmons*, 12 Heisk. 255; *Gay* v. *Parpart*, 106 U. S. 698 (27:263).

Such a decree is not binding as an estoppel.

Parkhurst v. *Sumner*, 23 Vt. 538; *Spencer* v. *Vigneaux*, 20 Cal. 442; *Mitchell* v. *Kintzer*, 5 Pa. 217, 220; *Riddle* v. *Baker*, 13 Cal. 295; Freem. Judg. § 250.

The purchaser is charged with notice of the laws of the State granting power to make the bonds they find on the market.

Northern Nat. Bank v. *Porter Twp.* 110 U. S. 618 (28:262); *Dixon County* v. *Field*, 111 U. S. 83 (28:360).

The power to issue the bonds does not depend upon the recitals. The recital of power does not confer power.

Dixon County v. *Field* and *Northern Nat. Bank* v. *Porter Twp. supra.*

Mr. Justice **Blatchford** delivered the opinion of the court:

This is an action at law, brought in the Circuit Court of the United States for the Western District of Tennessee, by Albert Kelley and Lawrence D. Alexander, copartners under the firm name of Kelley & Alexander, citizens of New York, against the Mayor and Aldermen of Milan, a municipal corporation organized under the laws of Tennessee, to recover the sum of $5,040, being the amount of 144 coupons, for $35 each, cut from twelve bonds purporting to have been issued by the defendant, bearing date July 1, 1873, each for the payment of the sum of $1,000, payable to —— or bearer, on the 1st of July, 1893; 24 of which coupons matured on the 1st of July, 1876, 24 on the 1st of July, 1877, 24 on the 1st [140] of July, 1878, 24 on the 1st of July, 1879, 24 on the 1st of July, 1880, and 24 on the 1st of July, 1881. Interest was claimed on each coupon from its maturity.

Each of the bonds was in the following form, all being alike except as to the numbers:

No. 1. State of Tennessee, Town of Milan. $1,000.

Be it known that the Town of Milan, by its Mayor and Aldermen, in consideration of the location of the Mississippi Central Railroad by said town, the citizens thereof, in pursuance of the laws of Tennessee authorizing the same, having agreed to issue bonds, payable on twenty years' time, to the amount of twelve thousand dollars, with annual interest at seven per cent, with coupons attached, in bonds of one thousand dollars each;

And whereas the people of Milan voted the same by a majority and in the form required by law, the vote being in pursuance of due notice, and in all respects according to the laws of Tennessee, said bonds to be payable to the Mississippi Central Railroad, under lease and control of the Southern Railroad Association:

Now be it known that the Town of Milan, by its Mayor and Aldermen, in pursuance of the authority given by the people thereof, and in obedience to the duty required of them, issues and delivers this bond, being one of twelve; and said Town of Milan hereby acknowledges itself to owe and be indebted to —— or bearer in the sum of one thousand dollars, which sum said Town of Milan binds itself to pay, in lawful money of the United States, to the Mississippi Central Railroad Company, or to the order of the Southern Railroad Association, or bearer, in the city of New York, on or before the first day of July, in the year of our Lord one thousand eight hundred and ninety-three, with interest at the rate of seven per cent per annum, payable annually on the first day of July of each year, on presentation of the proper coupons, hereto annexed.

And the Town of Milan, by its Mayor and Aldermen, hereby pledges the legal responsibility and the faith of said Town for the pay- [141] ment of said coupons and bond according to the terms and effect hereof.

In testimony whereof the Mayor and Aldermen of the Town of Milan have caused the signature of the Mayor to be hereto set, and the seal of the corporation to be affixed, this first day of July, 1873, A. D. A. Jordan,

[L. S.] *Mayor of the Town of Milan.*

The declaration alleged that the twelve bonds constituted the entire number of the issue by the defendant, and that the plaintiffs owned the bonds and coupons, by the purchase of them in good faith. The defendant, for plea, averred that it did not make the bonds or the coupons, nor was any person authorized to make the same for it, and that the coupons were not its act and deed. The plaintiffs, for replication to the plea, averred that theretofore, in the Chancery Court for the County of Gibson, in Tennessee, the defendant instituted suit against the payee of the bonds, and certain other persons, holders thereof, by filing its bill in said chancery court against the Mississippi Central Railroad Company, H. S. McComb, and others, alleging that the bonds were invalid, and praying to have the same so adjudged, and to be surrendered to the defendant and canceled; that thereafter, in January, 1875, in said chancery court, a final decree was rendered adjudging that the bonds and coupons were valid obligations against the Town of Milan; and that therefore the matter was *res adjudicata*. The defendant put in a rejoinder to the replication, averring that the decree referred to was procured by combination and fraud between the vice-president of the New Orleans, St. Louis and Chicago Railroad Company, and the agents and attorneys of the defendant, by which a decision of the court in the cause, upon the matters involved, was prevented, and the decree was consented to for the purpose of giving it effect as *res adjudicata* upon points in litigation not honestly contested; that the decree was not the judgment of the court on the issues involved, but was founded upon the unauthorized consent of [142] certain agents and attorneys of the defendant, who had no power to give such consent or to bind the defendant in the premises; that the court had no power to bind the defendant by the decree; that the decree was not rendered in favor of a party to the record, but in the

interest of a stranger thereto; and that the plaintiffs were not *bona fide* holders, without notice, of the bonds or the coupons. The plaintiffs demurred to the rejoinder, alleging various causes of demurrer. The demurrer was overruled, and the plaintiffs then took issue upon the rejoinder.

The case was then tried by the court, on due waiver, in writing, of a jury. At the trial, the coupons sued on, and the bonds from which they were detached, were offered in evidence by the plaintiffs, the genuineness of the signatures being admitted. Each coupon was in the following form:

Town of Milan.

$35. Warrant for thirty-five dollars, being for six months' interest, payable on the first day of July, 1880, in the city of New York, on bond No. —. A. Jordan,
Mayor of the Town of Milan, Tenn.

The defendant objected to the admissibility of the coupons and bonds, on the grounds that they were signed, sealed, and delivered by the constituted authorities of Milan without any legislative power having been given to them, or to the defendant or its agents, to sign, seal, deliver, or issue the coupons or the bonds. The court, being of opinion that such objection was well taken, sustained it, and excluded the coupons and the bonds; and the plaintiffs excepted.

There was a stipulation of facts made by the parties, which is set forth in the bill of exceptions, stipulating (1) that the bonds in question were issued by the defendant in payment of a stock subscription made by it to the Mississippi Central Railroad Company, the subscription being for the sum of $12,000; (2) that, at the time of making the subscription, the railroad company was about to extend its line from Jackson, Tennessee, to Cairo, Illinois, and the subscription was to aid in making such extension and to secure its location through the [143] defendant's town; (3) that such extension was completed in 1873, the same running through the town limits of the defendant, as it stipulated for, and the extension had been operated ever since that time.

The following facts also appeared by the stipulation: On the 10th of July, 1874, A. Jordan and six other persons, residents and taxpayers of the town, instituted proceedings in the Chancery Court at Humboldt, in Gibson County, Tennessee, against the Mississippi Central Railroad Company and others, for the purpose of avoiding the liability of the Town upon the bonds, the complainants constituting the Board of Mayor and Aldermen of the town. The bill alleged that in the record of proceedings of the board, of the date of May 11, 1872, there was the following entry: "The board was convened by order of the Mayor. Present: A. Jordan, mayor; W. M. McCall, M. B. Harris, J. H. Dickinson, J. M. Douglas, W. E. Reeves, W. H. Algea, aldermen. On motion it was ordered that 12 bonds of $1,000 each, with coupons attached, payable 20 years after issuance, bearing interest at 7 per cent per annum, be issued by the corporation of the Town of Milan, Tenn., to the Mississippi Central Railroad Company, upon the following conditions, namely: that the Mississippi Central Railroad Company be extended from Jackson, Tenn., to the town of Milan, and intersect or cross the Memphis and Louisville Railroad at the point agreed upon by Col. Read, chief engineer of the Mississippi Central Railroad, and the committee on behalf of the corporate authorities of the town of Milan, near S. P. Clark's residence,—the interest on said bonds to be paid annually,—and that the town marshal open and hold an election on the 12th day of June, 1872, within the corporate limits of said town, for a ratification or rejection of said proposition;" that in such record were entered the following proceedings as having taken place at a meeting of said board on the 17th of June, 1872: "The board met pursuant to adjournment. Present: A. Jordan, mayor; W. M. McCall, M. B. Harris, J. M. Douglas, W. H. Algea, and W. E. Reeves, aldermen. The minutes of the former meeting were then read and adopted. The election was held on the 12th day of June, 1872, for the ratifica- [144] tion or rejection of the action of the Board of Mayor and Aldermen of the Town of Milan, in regard to the issuance of the $12,000 in bonds to the Mississippi Central Railroad Company upon certain conditions. The returns of said election show a vote of 117 for subscription, and 2 no subscription." "W. M. McCall and W. H. Algea were appointed a committee to correspond with Judge Milton Brown, of Jackson, Tenn., in regard to the proposition of Milan corporation in regard to issuing the $12,000 in bonds to the Mississippi Central Railroad Company;" that the foregoing entries constitute all the proceedings in regard to the subscription, of the $12,000 in bonds, and in regard to the election held for ratifying or rejecting the action of the board in directing the issue of the bonds; that there was nothing to show the manner in which the election was held, or by whom the returns were made, or that the required number of votes was polled in favor of the proposition, as required by law; that the order of the board directing the issue of the bonds was without authority, (1) because the order was adopted and the election ordered without any application, in writing or otherwise, to the board for the purpose, as required by section 1144 of the Code of Tennessee; (2) because the election was ordered to be held, and was held, by the town marshal or constable, and not by the sheriff of the county of Gibson, as required by section 1143 of the Code; (3) because the marshal, after the polls were opened, and before they were closed, suffered the box in which the votes were deposited to be removed from the place in the town fixed for receiving ballots, to various other places in the town, and put into the ballot-box votes offered at such places not fixed by law as a place of voting, and without authority; and (4) because, at the time, the entire line of the contemplated road in which the stock was to be taken had not been surveyed by a competent engineer and substantially located by designating the termini and approximating the general direction of the road, and no estimate of the grading, embankment, and masonry had been made by any one authorized to make it, and no such estimate as was required by section 1145 of the Code had ever been filed; that, at the time of ordering and holding such election, the population of [145] Milan was less than 1,000 inhabitants, and

therefore it was not authorized by law to take stock in railroads, issue bonds, or levy a tax for their payment; that on the 23d of June, 1873, the said board made the following order: "On motion of W. M. McCall, the Mayor was instructed to issue twelve bonds to the said Mississippi Central Railroad Company, of the denomination of $1,000 each, with interest from date of issuance at the rate of 7 per cent per annum;" that thereupon said Mayor prepared twelve bonds, designated as the "Bonds of the Town of Milan," of $1,000 each, payable to the Mississippi Central Railroad Company, or bearer, twenty years from the date of issue, and dated July 1, 1873, bearing 7 per cent interest per annum, to which bonds were attached coupons for the payment of such interest on the 1st of July of each year the bonds had to run, each one of the bonds and coupons being signed by A. Jordan, mayor and recorder, and being made payable in the city of New York; that on the 4th of August, 1883, the bonds and coupons were delivered to the Mississippi Central Railroad Company, through one Hall, its treasurer and cashier; that the bonds, with the coupons, one year's interest being due on July 1, 1874, were still in the possession of Hall, or some other officer or agent of the company, and the company was attempting to collect the interest due on the bonds; that the Town was not bound to pay the bonds, their issue being made contrary to law, but, if the company should sell them to innocent purchasers, the Town would be bound in law to pay them; that the officers of the company would sell and assign the bonds, with a view to make the Town liable, if they had not already done so in part; and that they were attempting to negotiate them, and would do so unless restrained by injunction. The bill prayed that the company and its officers be enjoined perpetually from transferring or disposing of the bonds and coupons, and from collecting the same; and that they be delivered up and canceled.

On the 10th of July, 1874 (the same day on which the bill was filed), a temporary injunction, in accordance with its prayer, was issued. [146] The defendants thereafter filed a demurrer to the bill, and, on the 9th of January, 1875, the following final decree was entered in the suit:

A. Jordan, W. I. House, J. Q. Boyd, M. L. Baird, W. Y. Williamson, S. F. Rankin, *et als.*, Mayor and Aldermen of the Town of Milan,

vs.

The Mississippi Central Railroad Company, H. S. McComb, and James Hall.

Be it remembered that this cause, this 9th of January, 1875, came on to be heard and was heard before Hon. John Somers, chancellor, &c.; and, it appearing that this suit had been settled by the following agreement, to wit: "Whereas the Board of Mayor and Aldermen of the Town of Milan, in Gibson County, Tennessee, having filed a bill in the Chancery Court at Humboldt, against the Mississippi Central Railroad Company, to enjoin the collection of certain bonds issued by the Town of Milan to aid in the construction of said road, to wit, twelve bonds of $1,000 each, with coupons attached, and said suit is now pending in said court; and whereas it is agreed by and between said corporation of the Town of Milan and the New Orleans, St. Louis and Chicago Railroad Company, into which said Mississippi Central R. R. Co. has been merged by contract of consolidation between said last named company and the New Orleans, Jackson and Great Northern R. R. Co., that said suit be compromised as follows, to wit: The said New Orleans, St. Louis and Chicago R. R. Co. is to issue to the Town of Milan certificates of stock in the sum of $500 each, dollar for dollar, for said bonds, and the said Town of Milan on their part agrees, on receipt of said stock, to let a decree be entered in said cause in favor of the validity of said bonds, which are to be redelivered, with the seal of the Town affixed; and the costs of said suit to be paid by the said New Orleans, St. Louis and Chicago R. R. Co.

"In testimony whereof we herewith sign our names and affix our official seal, this December 18, 1874. A. Jordan, *Mayor.*

A. M. West,
2d Vice President N. O. St. Louis & C. R. R. Co."

In pursuance of this agreement, and by consent of the parties, it is ordered, adjudged and decreed that the New Orleans, St. Louis and Chicago R. R. Co. shall issue to the Town of Milan certificates of stock in said company, in sums of $500 each, dollar for dollar, for said twelve bonds of $1,000 each, referred to in the bill; and it is further ordered, adjudged and decreed that on the presentation of these certificates of stock the Town of Milan shall have the corporate seal of said Town affixed to each of said twelve bonds, and delivered to H. S. McComb, to whom they rightfully belong, or his authorized agent, and said bonds and coupons attached are declared to be valid and binding on said Town and its authorities. It is, by consent, further ordered, adjudged and decreed that the injunction be dissolved, the demurrer herein filed be and the same is hereby overruled, and this decree is declared a final settlement of the right of the parties; the New Orleans, St. Louis and Chicago Railroad Company to pay the costs, and this case only retained on the docket so far as is necessary to enforce the final execution of this decree. [147]

It was further agreed by said stipulation that the records of the Town were destroyed by fire in 1879; that no census authorized by law, of the town, had been taken before 1880, when the population was ascertained to be 1,600; that the railroad was not completed to the town until after July, 1873; that, after the final decree in the chancery court, the plaintiffs became the owners of the bonds and the coupons attached, purchasing the same for value and before they were due; and that, in the proposition submitted to the voters of the town, the question of subscribing $12,000 to the stock of the railroad company, payable in the bonds, "was also submitted in one question and at one and the same time, and was so approved by the requisite majority."

The bill of exceptions states that the plaintiffs offered in evidence the above named record of the Chancery Court at Humboldt, found in the stipulation; that the defendant, waiving all other objections, objected to the same because the record showed upon its face that it was not

binding in law upon the Town as a matter of
148] adjudication, and therefore did not sustain the replication to the plea; that the court sustained the objection, and the plaintiff excepted; and that the court found, as one of the facts to support its judgment, that, at the time the bonds and coupons were issued, the town did not contain 1,000 inhabitants.

The court found that the facts and the law were with the defendant, and rendered a judgment in its favor for the costs of the suit, to review which the plaintiffs have brought a writ of error. The opinion of the circuit court is reported in 21 Fed. Rep. 842.

Two questions arise for consideration in this case: (1) as to the statutory authority for the issue of the bonds; (2) as to the effect of the decree of January 9, 1875, in the suit in the state court of chancery.

150] The bonds in question were issued in payment of a subscription made by the Town to the stock of the Mississippi Central Railroad Company. On their face they do not recite any such subscription to stock, but recite, as the consideration for the bonds, the "location of the Mississippi Central Railroad by said Town." It is well settled that a municipal corporation, in order to exercise the power of becoming a stockholder in a railroad corporation, must have such power expressly conferred upon it by a grant from the Legislature; and that even the power to subscribe for such stock does not carry with it the power to issue negotiable bonds in payment of the subscription, unless the power to issue such bonds is expressly or by reasonable implication conferred by statute. Such is the law as recognized by the Supreme Court of Tennessee in the case of *Pulaski* v. *Gilmore*, decided in 1880, and published in 21 Fed. Rep. 870, and in *Milan* v. *Tennessee Central R. R. Co.* 11 Lea, 330, decided in 1883. Such is also the law as established by this court. *Marsh* v. *Fulton County*, 77 U. S. 10 Wall. 676 [19: 1040]; *Wells* v. *Pontotoc County*, 102 U. S. 625 [26: 122]; *Ottawa* v. *Carey*, 108 U. S. 110, 123 [27: 669, 675]; *Daviess County* v. *Dickinson*, 117 U. S. 657, 663 [29: 1026, 1028].

The grant of authority to a municipal corporation to subscribe for the stock of a railroad company does not carry with it the power to issue negotiable bonds to pay for the subscription, or anything more than the power to raise money by taxation to pay the amount of the subscription. If, in the statute granting the power to subscribe for the stock, no manner of paying the subscription is provided for, it cannot be paid by issuing negotiable bonds. The practice in Tennessee, as shown by its statute books, has been to authorize expressly the issuing of negotiable bonds by municipal corporations to pay for subscriptions to stock, in all cases where it was desired to confer upon such corporations the power to issue such bonds.

By a statute passed in 1852, and carried into the Code of Tennessee of 1857–8 (sections 1142–1161), in force when the bonds in this case were issued, any county, incorporated town, or city was authorized (section 1142) to subscribe
151] for stock, to a specified amount of its taxable property, "in railroads running to or contiguous thereto," upon certain specified terms and conditions. An election was to be held (section 1143) when ordered (section 1144) in a specified manner, after the entire line of the road (section 1145) had been surveyed, and a certain estimate of the grading, embankment, and masonry had been made, and after a specified notice of the election (section 1146) had been given. The statute (section 1147) prescribed the form of the vote, and provided (section 1148) that the subscription should be made if a majority of the votes cast should be in favor of it. Sections 1150, 1154, 1155, 1156, 1157, 1160, 1161, provided as follows:

"1150. As soon as the stock is subscribed, it is the duty of the county court, or corporate authorities, to levy a tax upon the taxable property, privileges and persons, liable by law to taxation within the county or corporation limits, sufficient to meet the installments of subscription as made, and the cost and expenses of collection, which tax shall be levied and collected like other taxes."

"1154. Not more than thirty-three and one-third per cent of the stock subscribed as above can be collected in any one year.

"1155. The tax-collector, as fast as he makes collections, shall pay the amounts over to the company.

"1156. He shall also, as he receives the tax, give to each taxpayer a certificate in such form as the railroad company may prescribe, showing the amount of such tax paid by him, of which he shall retain a duplicate to be delivered to the president of the railroad company; and such certificate is negotiable by delivery or assignment, and, with a deduction of its proportion of the cost of collection, is receivable in payment of either freight or passage on the railroad in which the subscription is taken, after the expiration of one year from the completion of such road.

"1157. The holder of such certificates, to the amount of one share or more of the stock of such railroad company, is entitled to demand and receive from the company, in lieu thereof, a certificate of stock in the capital stock of such company, which will give him all the privileges of any other stockholder."

"1160. For the purpose of meeting unex- [152]
pected contingencies, the county or corporation authorities may anticipate the collection of the railroad tax by the issuance of warrants, bearing six per cent interest, and payable at such times as may be desired by the railroad company, the warrants to be received as payment of so much stock.

"1161. In such a case a sufficiency of the railroad tax shall be paid into the county treasury to meet the warrants as they fall due."

These provisions of the statute do not contemplate or authorize the issue of negotiable bonds. They provide distinctly for the levying of a tax to meet the installments of the subscription. Section 1160, in authorizing the issuing of warrants made payable at such times as may be desired by the railroad company, and to be received by it in payment for the stock, only contemplates that the warrants shall be issued in anticipation of the collection of the tax, which, under the provisions of section 1154, may be entirely collected in three years, but cannot be collected more rapidly than one third in each year; and there is no implication that any warrants are to be issued except to

anticipate the collection of a tax, after such tax is levied under the provisions of section 1150; and such levy is to be made as soon as the stock is subscribed for, and is to be the levy of a tax sufficient to meet the installments of subscription as made, and the costs and expenses of collection, subject to the provision of section 1154, that, although the levy of the tax is made, not more than one third of the stock subscription can be collected in any one year. It is solely to anticipate the collection of the tax, when it is collectible by virtue of the terms of the levy, that the warrants are authorized, by section 1160, to be issued; and there is nothing in the statute which contemplates that the warrants shall be made payable at any time later than the time fixed for the collection of the installments of the tax. These provisions exclude the power of issuing such negotiable bonds as were issued in this case.

It is contended by the plaintiffs that express authority for issuing the bonds in question is to be found in an Act of the Legislature of Tennessee, approved January 23, 1871, being chap-
[153] ter 50 of the Acts of 1870-71. In 1870 a new Constitution was adopted in Tennessee, section 29 of article 2 of which reads as follows:

"Sec. 29. The General Assembly shall have power to authorize the several counties and incorporated towns in this State to impose taxes for county and corporation purposes respectively, in such manner as shall be prescribed by law; and all property shall be taxed according to its value, upon the principles established in regard to state taxation. But the credit of no county, city, or town shall be given or loaned to or in aid of any person, company, association, or corporation, except upon an election to be first held by the qualified voters of such county, city, or town, and the assent of three fourths of the votes cast at said election. Nor shall any county, city, or town become a stockholder with others in any company, association, or corporation, except upon a like election and the assent of a like majority. But the Counties of Grainger, Hawkins, Hancock, Union, Campbell, Scott, Morgan, Grundy, Sumner, Smith, Fentress, Van Buren, White, Putnam, Overton, Jackson, Cumberland, Anderson, Henderson, Wayne, Marshall, Cocke, Coffee, Macon, and the new county herein authorized to be established out of fractions of Sumner, Macon, and Smith Counties, and Roane, shall be excepted out of the provisions of this section so far that the assent of a majority of the qualified voters of either of said counties voting on the question shall be sufficient, when the credit of such county is given or loaned to any person, association, or corporation: *Provided*, That the exception of the counties above named shall not be in force beyond the year one thousand eight hundred and eighty, and after that period they shall be subject to the three-fourths majority applicable to the other counties of the State."

The Act approved January 23, 1871, was entitled "An Act to Enforce Article 2, Section 29, of the Constitution, to Authorize the Several Counties and Incorporated Towns in this State to Impose Taxes for County and Corporation Purposes." It read as follows:

"Sec. 1. *Be it enacted by the General Assem-*
[154] *bly of the State of Tennessee*, That the several counties and incorporated towns in this State may, and are hereby authorized to impose taxes for county and corporation purposes, respectively, in the following manner and upon the following conditions:

"1. That all taxable property shall be taxed according to its value, upon the principles established in regard to state taxation.

"2. The credit of no county, city, or town shall be given or loaned to or in aid of any person, company, association, or corporation, except, first, upon the consent of a majority of the justices of the peace of the county, at a quarterly term of the county court of such county, or a majority of the board of mayor and aldermen, as the case may be, of such city or town, and upon an election afterwards held by the qualified voters of said county, city, or town, and the assent of three fourths of the votes cast at said election. The said county court, or board of mayor and aldermen, as the case may be, shall spread upon their records the proposition and the amount to be voted upon by the people, and shall have full power to hold and conduct such elections according to the laws regulating elections in this State; and if the assent of three fourths of the voters of such county, city, or town is had, then the county court or board of mayor and aldermen, as the case may be, shall have full power to make and execute all necessary orders, bonds and payments, in order to carry out such loan or credit voted for as prescribed in this Act; nor shall any county, city, or town become a stockholder with others in any company, association or corporation, except upon a like election, and the assent of a like majority, as prescribed in this Act."

Section 2 of the Act enacts the constitutional exception as to the specified counties.

This Act was manifestly passed for the object stated in its title, to carry into effect the provisions of section 29 of article 2 of the Constitution of 1870, and to prescribe the manner and the conditions, in conformity with the provisions of that section, in and upon which the several counties and incorporated towns in the State should have the right to impose taxes for [155]
county and corporation purposes. The second clause of the first section of the Act only provides, in the language of the Constitution, that "the credit of no county, city, or town shall be given or loaned to or in aid of any person, company, association, or corporation, except" upon the assent of three fourths of the votes cast at an election held by the qualified voters of the county, city, or town. The clause then goes on to provide, in the exact language of the Constitution, as follows: "Nor shall any county, city, or town become a stockholder with others in any company, association, or corporation, except upon a like election and the assent of a like majority."

The enactments in that clause are entirely inhibitory and negative in their character. They do not confer any authority for the giving or loaning of credit upon any municipality, nor confer the right upon any municipality to become a stockholder with others in any corporation; but they only prescribe the condition that no credit shall be given or loaned, and no ownership of stock be created, unless the prescribed election be first held, and the assent of

three fourths of the votes cast at it be first given. But the authority to give or loan credit, and to become a stockholder, under the conditions prescribed in the Act of 1871, must be found in an independent grant of authority, in some other statutory provision, either general or special. These were the views taken by the Supreme Court of Tennessee in the case of *Pulaski* v. *Gilmore*, before cited. See, also, *Milan* v. *Tennessee Cent. R. R. Co. supra.*

It is further contended that authority to issue the bonds was given by an Act of the Legislature of Tennessee, approved March 23, 1872, chapter 20 of the Acts of 1872, entitled, "An Act to Authorize the Mayor and City Council, or Mayor and Board of Aldermen, of any Incorporated City or Town in the State of Tennessee having a Population of from One Thousand and upwards to Twenty Thousand Inhabitants, to Issue Bonds of Said City or Town to the Amount of Fifteen Thousand Dollars." That Act is as follows:

"Sec. 1. *Be it enacted by the General Assembly of the State of Tennessee*, That the Mayor and [156] City Council, or the Board of Mayor and Aldermen, of any incorporated city or town in the State of Tennessee having a population of from one thousand to twenty thousand are hereby authorized in their corporate capacity to issue the bonds of the said city or town, signed by the Mayor and countersigned by the Recorder of said city or town, with coupons for interest attached, to an amount not exceeding Fifteen Thousand Dollars. The Bonds herein provided for may be executed of denominations from Twenty-five to Five Hundred Dollars, at discretion of said Mayor and City Council or Mayor and Aldermen, and to mature at such times as may be fixed by said Mayor and City Council or Mayor and Aldermen, from one to twenty years after date, and bearing interest at the rate of eight per cent per annum, payable semi-annually; the past-due coupons on which bonds shall be receivable for taxes and all other dues to the corporation issuing the same: *Provided*, That the bonds issued under the provisions of this Act shall be alone for the purpose of paying outstanding liabilities against the city or corporation issuing them, and shall not in any case exceed the unsettled and matured liabilities or debts of such city or corporation at the time of issuance thereof; but in no event shall the bonds be issued without the consent of three fourths of the qualified voters voting at an election to be held for that purpose under the supervision of said Mayor and City Council or Board of Aldermen.

"Sec. 2. *Be it further enacted*, That the said Mayor and City Council or Mayor and Aldermen of said city or town are hereby authorized to issue at par such coupon bonds as are provided for in this Act, to the holders of *bona fide* claims against said city or town, in liquidation and discharge of such claims and interest thereon, and to such others as are willing to take them at par, not to exceed in amount said sum of fifteen thousand dollars: *Provided*, That in no case shall said Mayor and said City Council or Mayor and Aldermen of said city or town, as the agent for that purpose, sell under their par value any of the bonds the issuance of which is authorized by this Act: *Provided further*, That the proposed rate of interest the bonds are to bear shall be specified and sub- [157] mitted to the vote of the inhabitants of such corporations, at the time the election is held in regard to the issuance of the bonds."

By the express provision of section 1 of this Act, the bonds to be issued under it are to "be alone for the purpose of paying outstanding liabilities against the city or corporation issuing them;" and it is provided that they "shall not in any case exceed the unsettled and matured liabilities or debts of such city or corporation at the time of issuance thereof;" and, by section 2, they are to be issued "to the holders of *bona fide* claims against said city or town, in liquidation and discharge of such claims and interest thereon, and to such others as are willing to take them at par."

We are of opinion that this statute has no application to the present case. Its object was manifestly to enable certain incorporated cities and towns to fund their matured debts, by issuing bonds of the character specified in the Act. The debts for which they were to be issued were not only to be unsettled debts, but matured debts, and the bonds were not to be issued in any event without the consent of three fourths of the qualified voters voting at an election to be held for the purpose. When the election in the present case was held, no debt created by any subscription to any stock had yet been incurred; and it is expressly stipulated, in the agreed statement of facts, that the question of subscribing $12,000 to the stock of the company, and the question of paying such subscription in bonds, were submitted to the voters as a single question, at one and the same time, and were approved by the same vote. Indeed, from the record of the proceedings of the Board of Mayor and Aldermen of the Town, there does not appear to have been any submission to the voters of the question of subscribing to the stock of the railroad company, or of issuing the bonds in payment for any such subscription, but only the question of whether the bonds should be issued by the Town to the company as a donation or subscription of bonds; and the bonds themselves, on their face, carry out only the same idea. Still, it is agreed that the bonds were issued in payment of a "stock subscription" made by the Town to the railroad company. But, even in that view, the liability [158] on the subscription to the stock was not such a matured liability or debt of the Town, at the time the election was held, as the Act of 1872 refers to. The vote of the people was, at most, a vote to subscribe for the stock. The terms of the vote appear to have been "For subscription," or "No subscription." The vote to subscribe for the stock and the vote to issue bonds were one and the same vote, comprehended in the words "For subscription." In order to make the liability for the subscription a "matured" liability of the Town, it was necessary that the subscription should be actually made in pursuance of the vote, and that the terms for paying the money in discharge of it should be determined, and that an election should be thereafter held to vote in regard to issuing bonds for the liability as a matured liability, and in view of all the terms and circumstances of such liability. No such election was held after any liability for the subscription became a matured liability.

In regard to the effect of the decree of the chancery court of January 9, 1875, it is to be said that it was made in a suit by the town authorities to enjoin perpetually the collection of the bonds, on the ground that they were issued without authority of law. By the decree it was ordered, by consent of the parties, that the preliminary injunction should be dissolved and the demurrer be overruled. This left the bill to stand as it was originally filed. The decree sets forth that the suit had been settled by an agreement, a copy of which is embodied in the decree. That agreement refers to the bonds as having been issued by the Town "to aid in the construction of said road," that is, the road of the Mississippi Central Railroad Company. It does not refer to the bonds as having been issued in payment of a subscription to the stock of the company. It then sets forth that it has been agreed by the Town and the New Orleans, St. Louis and Chicago Railroad Company (into which the Mississippi Central Railroad Company had been merged by contract of consolidation between the last named company and the New Orleans, Jackson and Great Northern Railroad Company) [159] that the suit should be compromised by the issue, by the New Orleans, St. Louis and Chicago Railroad Company, to the Town, of certificates of stock, in the sum of $500 each, dollar for dollar, for the $12,000 of bonds, the Town agreeing, on the receipt of the stock, to let a decree be entered in the cause in favor of the validity of the bonds, which were to be redelivered, with the seal of the Town affixed; and the costs of the suit were to be paid by the New Orleans, St. Louis and Chicago Railroad Company.

The substance of this is, that on the bill, it standing good, with the demurrer to be overruled, the plaintiffs agree, notwithstanding the averments of the bill, that the bonds are valid. The decree then states that, in pursuance of that agreement and by consent of the parties, it is decreed that the New Orleans, St. Louis and Chicago Railroad Company shall issue to the Town the certificates of stock in the company referred to in the agreement; that, on the presentation of those certificates, the Town shall have its corporate seal affixed to each of the twelve bonds; and that the bonds and their coupons are declared to be valid and binding on the Town and its authorities.

This was no adjudication by the court of the validity of the bonds on the submission to it, as a judicial tribunal, of the question of such validity. The declaration of the validity of the bonds, contained in the decree, was made solely in pursuance of the consent to that effect contained in the agreement signed by the Mayor of the Town and the officer of the New Orleans, St. Louis and Chicago Railroad Company. The act of the Mayor, in signing that agreement, could give no validity to the bonds, if they had none at the time the agreement was made. The want of authority to issue them extended to a want of authority to declare them valid. The Mayor had no such authority. The decree of the court was based solely upon the declaration of the Mayor, in the agreement, that the bonds were valid; and that declaration was of no more effect than the declaration of the Mayor, in the bill in chancery, that the bonds were invalid.

The adjudication in the decree cannot, under the circumstances, be set up as a judicial de- [160] termination of the validity of the bonds. *Russell* v. *Place*, 94 U. S. 606 [24:214]; *Manhattan L. Ins. Co.* v. *Broughton*, 109 U. S. 121, 125 [27:878,880]. This was not the case of a submission to the court of a question for its decision on the merits, but it was a consent in advance to a particular decision, by a person who had no right to bind the Town by such a consent, because it gave life to invalid bonds; and the authorities of the Town had no more power to do so than they had to issue the bonds originally.

There is nothing inconsistent with this view in *Nashville, C. & St. L. R. Co.* v. *United States*, 113 U. S. 261 [28:971], where it was held that a decree in equity, by consent of parties, and upon a compromise between them, was a bar to a subsequent suit upon a claim therein set forth as among the matters compromised and settled, although not in fact litigated in the suit in which the decree was rendered. In that case both parties had full power to make the compromise involved.

The judgment of the Circuit Court is affirmed.

EXTEIN NORTON, *Plff. in Err.*, [160]

v.

MAYOR AND ALDERMEN OF THE TOWN OF DYERSBURG, TENNESSEE.

(See S. C. Reporter's ed. 160-176.)

Town bonds—Tennessee Statutes—power to issue bonds—liability of town.

1. In an action to recover upon town bonds and coupons,—*Held*, that the Tennessee Act of January 23, 1871, did not give authority for the issue of the bonds.

2. *Held* further, that the Acts of that State, of December 16, 1871, February 26, 1869, and February 8, 1870, did not authorize the issue of bonds payable in ten years.

3. The grant of power to a municipal corporation to subscribe for the stock of a railroad company does not carry with it the implied authority to issue negotiable bonds therefor; express legislative authority to issue bonds like those involved in the present suit is necessary.

4. In a suit brought solely for a recovery upon the bonds and coupons, no question growing out of the liability of the town for the subscription to the stock can be inquired into.

[No. 207.]

Argued April 5, 1888. Decided April 23, 1888.

IN ERROR to the Circuit Court of the United States for the Western District of Tennessee, to review a judgment for defendant in an action to recover upon town bonds and coupons. *Affirmed.*

The facts are fully stated by the court.

Messrs. **D. H. Poston**, *W. K. Poston*, *Parks & Draper*, and *Smith & Collier*, for plaintiff in error:

Where a suit is brought on negotiable bonds by a *bona fide* holder for full value, some substantial defense must be set up, to escape liability.

Clay County v. *Society for Savings*, 104 U. S. 579 (26:856); *Pine Grove* v. *Talcott*, 86 U. S. 19 Wall. 678 (22:233).

Under both Constitutions, subscriptions in

aid of railroads was a corporate purpose, and counties and towns had the right to lend aid and credit, and levy taxes to pay the same.

Nichol v. *Nashville*, 9 Humph. 252; *Louisville & N. R. R. Co.* v. *Davidson County Ct.* 1 Sneed (Tenn.), 666; *Memphis* v. *Memphis Gayoso Gas Co.* 9 Heisk. 537; *Winston* v. *Tennessee & Pac. R. R. Co.* 1 Baxt. 66.

Upon questions of commercial securities federal courts are not bound by state decisions.

Oates v. *First Nat. Bank*, 100 U. S. 246 (25:583); *Pine Grove* v. *Talcott*, *supra*.

Authority to subscribe stock in a railroad "as fully as an individual," given to a city, was implied authority to take stock on a credit and issue negotiable bonds in payment.

Seibert v. *Pittsburg*, 68 U. S. 1 Wall. 272-274 (17:553); *Commonwealth* v. *Pittsburgh*, 41 Pa. 278.

Authority "to borrow money for any object in its discretion" is construed as authority to borrow money, and issue negotiable bonds to pay for it.

Meyer v. *Muscatine*, 68 U. S. 1 Wall. 387 (17:564); 2 Morawetz, Corp. § 350; *Police Jury* v. *Britton*, 82 U. S. 15 Wall. 572 (21:254).

Where a municipal corporation has the implied power to borrow money or lend credit, it has the implied power to execute all proper bonds, notes or other negotiable securities to accomplish these purposes.

Hull v. *Marshall County*, 12 Iowa, 142; *Gause* v. *Clarksville*, 5 Dill. 167, 168; *Mills* v. *Gleason*, 11 Wis. 470; *Bank of Chillicothe* v. *Chillicothe*, 7 Ohio (Pt. 2) 31; *Commonwealth* v. *Pittsburgh*, 34 Pa. 496; *Griffin* v. *Inman*, 57 Ga. 370; *Black* v. *Cohen*, 52 Ga. 621; *Ketchum* v. *Buffalo*, 14 N. Y. 356.

This implied power is thoroughly indoctrinated into the laws and decisions of the State of Tennessee.

Union Bank v. *Jacobs*, 6 Humph. 515; *Nichol* v. *Nashville*, 9 Humph. 264; *Adams* v. *Memphis & L. R. R. R. Co*, 2 Coldw. 645; *Moss* v. *Harpeth Academy*, 7 Heisk. 288; *State* v. *Anderson County*, 8 Baxt. 249.

In any event this court should hold the defendant as upon non-negotiable bonds or notes, treating the issuance of negotiable bonds as an excess of authority only, and not invalidating the loan with interest as agreed upon.

Nashville v. *Ray*, 86 U. S. 19 Wall. 475, 477, 478 (22:168, 169); *Williams* v. *Duck River Valley R. R. Co.* 9 Baxt. 488.

Messrs. Sparrel Hill and **T. B. Turley**, for defendant in error:

Counties and municipal corporations must have legislative authority for the issuance of bonds.

South Ottawa v. *Perkins*, 94 U. S. 260 (24:154); *Pendleton County* v *Amy*, 80 U. S. 13 Wall. 297 (20:579); *Kenicott* v. *Wayne County*, 83 U. S. 16 Wall. 452 (21:319); *St. Joseph Twp.* v. *Rogers*, Id. 644 (21:328); *Coloma* v *Eaves*, 92 U. S. 484 (23:579); *Marshall* v. *Fulton County*, 77 U. S. 10 Wall. 676 (19:1040); *Police Jury* v. *Britton*, 82 U. S. 15 Wall. 566 (21:251); *Nashville* v. *Ray*, 86 U. S. 19 Wall. 468 (22: 164); *Milan* v. *Tennessee Cent. R. R. Co.* 11 Lea, 329; *Pulaski* v. *Gilmore*, 21 Fed. Rep. 870.

For the general distinction between a loan of credit and subscription for stock, see the following cases:

People v. *Salem*, 20 Mich. 452; *Stewart* v. *Polk County*, 30 Iowa, 9; *Allen* v. *Jay*, 60 Me. 124; *Walker* v. *Cincinnati*, 21 Ohio St. 14; *Louisville & N. R. R. Co.* v. *Davidson County*, Ct. 1 Sneed (Tenn.), 637.

The bonds were unauthorized, illegal and void for want of authority to issue them.

Woodruff v. *Okolona*, 57 Miss. 806, 808; *Bell* v. *Mobile & O. R. R. Co.* 71 U. S. 4 Wall. 598 (18: 338); *Starin* v. *Genoa*, 23 N. Y. 454; *Jonesboro* v. *Cairo & St. L. R. R. Co.* 110 U. S. 192 (28:116).

The power to subscribe for stock does not carry by implication the power to execute bonds.

Dan. Neg. Inst. § 1533.

This court will follow the latest construction given by the highest court of Tennessee of the laws and Constitution of that State.

Taylor v. *Ypsilanti*, 105 U. S. 71 (26:1012); *Milan* v. *Tennessee Cent. R. R. Co.* and *Pulaski* v. *Gilmore*, *supra*.

The power to issue bonds ought not to be implied from the power to make contracts and incur indebtedness.

Claiborne County v. *Brooks*, 111 U. S. 400 (28:470).

Whether the defendant is under a legal obligation to make restitution of such sums as were actually received by its authorized agents or officers upon the sale of the bonds, is not a question arising in the present action, which is only for the recovery of the stipulated interest upon such bonds.

South Ottawa v. *Perkins*, 94 U. S. 260 (24:154).

Mr. Justice **Blatchford** delivered the opinion of the court:

This is an action at law, brought in the Circuit Court of the United States for the Western District of Tennessee, by Extein Norton, a citizen of New York, against the Mayor and Aldermen of the Town of Dyersburg, a municipal corporation created by the State of Tennessee, to recover sundry sums of money, as due for the principal of 36 bonds for $500 each, and 58 bonds for $250 each, and 62 bonds for $100 each, all due May 10, 1883, and on sundry coupons cut from such bonds, due at various times between the date of the bonds and their maturity. **[161]**

The bonds and coupons were in the following form:

"Bond No.—. $250.

"The Mayor and Aldermen of the Town of Dyersburg, in the State of Tennessee, a corporation duly chartered by Act of the General Assembly of the State of Tennessee, by the qualified voters of said Town, under the provisions of an Act of Legislature empowering them so to do, by this bond promise to pay to the bearer hereof, ten years after the date hereof, the sum of two hundred and fifty dollars, with interest at seven per centum per annum from this date, payable semi-annually, at the city hall in Dyersburg, on presentation of the coupons hereto attached, to aid in the construction of the Paducah and Memphis Railroad; upon the express condition, however, that the said railroad shall be constructed to the Town of Dyersburg, Tennessee, and have a depot of said railroad located within half a mile of the court house in said town.

"In testimony whereof the Mayor and Aldermen of the Town of Dyersburg, Tennessee, have caused this bond and the coupons attached to be signed by the Mayor of said Town, and countersigned by the Recorder, on this 10th day of May, 1873.

"[Seal, Mayor and Aldermen, Dyersburg, Tenn.]
"Countersigned: C. P. Clark, *Mayor.*
"W. C. Doyle, *Recorder.*"

[162] "$8.75. $8.75.

"The Mayor and Aldermen of Dyersburg, Tenn., will pay the bearer on the — day of——, 18—, eight dollars and seventy-five cents, being the semi-annual interest due on Paducah and Memphis Railroad Bond No.—.

"C. P. Clark, *Mayor,*
"W. C. Doyle, *Recorder.*"

The defendant pleaded *nil debet* and *non est factum.* The cause was tried by the court, on the written waiver of a jury, and it found the issues of law and fact with the defendant, and rendered a judgment for it, to review which the plaintiff has brought a writ of error. There was an agreed statement of facts, which is embodied in a bill of exceptions, and there is a finding of facts and of conclusions of law, also contained therein. From this, the following facts appear:

The plaintiff bought the bonds and coupons before maturity, for full value, and without any knowledge or notice of any defect, infirmity, equity, or condition against the liability of the Town therefor, unless, as matter of law, the face of the bonds charges him with notice. The bonds and coupons were signed, sealed and delivered by the properly authorized municipal officers of the defendant; but the want of authority so to do is controverted, the defendant insisting that no proper legislative or other authority existed for making the subscription and issuing the bonds that were made and issued, the plea of *non est factum* only going to that extent. The Mississippi River Railroad Company, to which it is claimed the subscription was originally authorized to be made by the defendant, was afterwards consolidated with and became a part of the Paducah and Memphis Railroad Company. That company mortgaged its properties and franchises, the mortgage was foreclosed, and the purchaser at the sale reorganized, under the statute of Tennessee, as the Chesapeake, Ohio and Southwestern Railroad Company, by which the road was built and finally completed on January 1, 1882, and is now operated as a railroad its entire length. The bed and track are now, and were at the date of bringing of the suit, [163] fully built and equipped and operated through the County of Dyer, in which the county Town of Dyersburg is situated, and the last named company had built a depot building within half a mile of the court house in the Town of Dyersburg before this action was brought.

The proceedings of the Board of Mayor and Aldermen of the Town, relative to the subscription in controversy, are contained in a paper—Exhibit "B" to the stipulation—which is set forth in the margin.*

The question of the subscription referred to [164] in the foregoing proceedings was left, under proper notices, to the decision of the qualified [165] voters of the Town of Dyersburg, and the subscription was carried by a vote largely in excess of the requisite constitutional majority. [166] At the date of the subscription the Town was without railroad facilities, and the object of the subscription was to aid the building of the pro- [167] posed line near the Town. The railroad has been built, but no part of the subscription has [168] been paid except the first installment of interest, which was paid.

The bill of exceptions states as follows: "The court found as facts, 1st, that an ordinance was regularly and legally adopted June 5, 1872, by the Board of Mayor and Aldermen of the Town of Dyersburg, ordering an election to be held by the qualified voters of said Town, to determine whether the said Town should subscribe for $50,000 of the capital stock of the Paducah and Memphis Railroad Company, to be paid for by said Town by issuing to said railroad company its negotiable bonds to that amount, bearing interest at 7 per cent, and payable at 10 years from date; that on July 6, 1872, said proposition was voted on by the qualified voters of said Town, after 30 days' notice [169] of such election had been duly published in the newspapers of said Town, when said proposition was carried by a vote of 126 for the subscription to 2 against it; that at a meeting of the Board of Mayor and Aldermen of said Town, held on July 6, 1872, the returns of said election were duly and properly canvassed by said board, which, by ordinance then duly passed, declared the subscription, on the terms of the ordinance of June 5, 1872, was properly and legally carried, in said election, by the vote as before stated, and instructed the Mayor to subscribe said sum of $50,000 to the stock of the said railroad company, upon the terms and conditions of said ordinance; that, acting pursuant to that authority, the Mayor of said Town, on May 10, 1873, subscribed, for and in the name of said Town, said sum to the capital stock of said company, received certificate of stock therefor, issued and delivered the coupon bonds of said Town for said amount to said railroad company, including those here in this suit; that, when said coupon bonds were so executed, issued and delivered by said Mayor to said railroad company, the said company had laid the track of said road to the northern and southern line of Dyer County, and commenced work on said railway within the limits of said County of Dyer; that plaintiff bought the bonds and coupons sued on herein in due course of trade, for full value, before maturity, and without any knowledge or notice of any defect, infirmity, equity, or condition against the liability of said Town, except so far as appears on the face of said bonds; that, before the bringing of this suit, the said railroad had been constructed and was being operated its entire length from Paducah, Kentucky, to Memphis, Tennessee, and was constructed to said Town of Dyersburg, Tennessee, and had a depot lo-

* "Memphis, Tenn., July 13, '72.

"At a meeting of the board of directors of the Paducah and Memphis Railroad Company held this day,—present, L. S. Trimble, Vice-President; Jno. Overton, Jr., W. F. Norton, D. M. Henning, and A. T. Lacy; L. S. Trimble, Vice-President, in the chair.

"The minutes of the meeting of May 1st were read and approved.

"Jno. Overton, Jr., offered a resolution as follows:

"Whereas, C. P. Clark, Mayor of the Town of Dyersburg, in the County of Dyer, in the State of

cated within half a mile of the court house in said Town, the same having been done by the Chesapeake, Ohio and Southwestern R. R. Co. on or about the —— day of ——, as set forth in the agreed statement of facts filed herein. The court ruled that no legislative authority whatever existed for the issuance by said defendant of the bonds and coupons sued on in this case. To which finding and ruling plaintiff then and there duly excepted. The plaintiff requested the court to rule that, under the [170] facts found, the defendant was authorized to execute, issue, and deliver to said railroad company the said bonds, which request was re-

Tennessee, by his subscription in writing, has subscribed in behalf of the Town of Dyersburg the sum of fifty thousand dollars to the capital stock of the Paducah and Memphis Railroad Company, which said subscription is in the words and figures following, to wit:

"Mayor's Office, Dyersburg, *July 8th*, 1872.

"Dear Sir: I beg leave to submit herewith a copy of the proceedings of the Board of Mayor and Aldermen of the Town of Dyersburg, authorizing me to subscribe $50,000.00 (fifty thousand dollars) to the capital stock of the Paducah and Memphis Railroad Company on certain terms and conditions minutely set forth in said proceedings, payable in bonds of the Town of Dyersburg, bearing seven per cent interest, payable semi-annually. In pursuance of the authority thus conferred upon me, I herewith tender and propose to subscribe said sum to the capital stock of your company on the terms proposed, and will promptly issue the bonds of said Town, if accepted, as soon as the terms and stipulations allow it.

"I have the honor to be, sir, very respectfully, &c. C. P. Clark, *Mayor of Dyersburg.*

"To the President of the Paducah and Memphis Railroad Company.

"*Now, therefore, be it resolved*, That this board does hereby, in behalf of the Paducah and Memphis Railroad Company, accept said subscription, made by said town of Dyersburg, through said C. P. Clark, upon the terms therein expressed.

"Resolved, 2, That the record of the proceedings of the Board of Mayor and Aldermen of said Town of Dyersburg, accompanying said subscription, be entered upon the minutes of this meeting, and the same is accordingly done, as follows:

"STATE OF TENNESSEE, *Town of Dyersburg:*

"Be it remembered, that, at a meeting of the Board of Mayor and Aldermen of the Town of Dyersburg, held at the court house (within said town) on the 5th day of June—present, his honor, Mayor Clark, and every one of the aldermen of said town: In the year 1872 the following ordinance was adopted by unanimous vote of said board, to wit: The President of the Paducah and Memphis Railroad Company, by attorney, has presented a memorial to the board of mayor and aldermen, praying the board to order an election to be held to allow the qualified voters of the corporation of Dyersburg to determine by ballot whether they are willing to authorize the mayor and aldermen to make a subscription of $50,000 to the capital stock of said company, to be paid in the bonds of said corporation, said bonds to be due and payable in ten years from the date thereof, the interest thereon to be paid semi-annually at the rate of seven per cent per annum, for the purpose of assisting in preparing the roadbed of said railroad company through the county of Dyer; and said memorial was accompanied by a statement of the cost of the work through Dyer County.

"And whereas, heretofore, to wit, on the 9th day of August, 1871, upon application of the President of the Mississippi River Railway Company to the board, under and by virtue of which there was submitted to the qualified voters of said Corporation, on the 12th day of September, 1871, the question as to their willingness to vote a subscription of $50,000 to the capital stock of said Mississippi River Railway Company; and whereas, in accordance with said ordinance, said election was held on said 12th day of September, 1871, and resulted in favor of said subscription by a legal majority; and whereas said subscription so made was held to be illegal on account of its exceeding the amount allowed by the existing laws to be voted, and was never accepted by said railway company;

"And whereas, afterwards, to wit, on the 14th day of December, 1871, by the Legislature of the State of Tennessee (see chap. 122, sec. 1, Acts of 1871), said action of the corporation of Dyersburg was ratified, and said town authorized to revote a like amount of subscription;

"And whereas, under and by virtue of provisions of their respective charters, and under and by virtue of the laws of the States of Tennessee and Kentucky, the Paducah and Gulf Railroad Company and said Mississippi River Railway Company have been consolidated into one company, under the name and style of the Paducah and Memphis Railroad Company:

"Therefore, on motion, the following ordinance was unanimously adopted, to wit:

"Sec. 1. Be it ordained by the Board of Mayor and Aldermen of the Town of Dyersburg, State of Tennessee, that there shall be submitted to the qualified voters of the town of Dyersburg the proposition to subscribe fifty (50) thousand dollars, in the bonds of said town, to the capital stock of the Paducah and Memphis Railroad Company, on the following terms and conditions, viz.: When the said railroad company has laid the track of said road to the northern and southern line of Dyer County and commenced work on said railway within the limits of Dyer County, then the mayor shall issue to said railway company coupon bonds of the Town of Dyersburg, to the amount of said subscription, which is fifty thousand dollars; the whole of said bonds shall be known as the 'Dyersburg, Paducah and Memphis railroad bonds,' and shall be due and payable in ten years from date of issuance, bearing interest at the rate of seven per cent per annum, payable semi-annually; the bonds shall be issued in sums of $100, $250, and $500, with the necessary interest coupons attached.

"Sec. 2. To pay the interest accruing upon said bonds, and, if deemed advisable, to create a sinking fund for their redemption, it shall be the duty of the Board of Mayor and Aldermen of said Town, at their first regular meeting after the first day of December of each year, to levy a specific tax upon such subjects of taxation as they may deem best, to meet the interest coupons falling due within the year succeeding said levy; and, if the Board of Mayor and Aldermen, for any cause, fail at the said meeting so to levy said tax, then the same may by said board be levied at any subsequent regular or called meeting, and the coupons of said bonds shall be receivable in the payment of said railroad tax.

"Sec. 3. This subscription shall not become binding until ratified by a majority of three fourths of the votes of the legally qualified voters of said town voting in an election held to test their sense on the question. The mayor shall make publication in both the Dyer County Progress and Neale's State Gazette, by proclamation, of an election to be held for that purpose, with thirty days' notice, and shall also make publication of this ordinance in connection with said election notice. Those who favor said subscription at said election shall place on their ballot 'For subscription' and those who oppose shall place on their ballots the words 'No subscription.'

"Sec. 4. The above subscription is made on the condition that the Paducah and Memphis Railway is to be located and built to Dyersburg, and a depot of said road to be located within one half mile of the court house, without which condition accepted by said railroad company this subscription to be void, and no bonds shall be issued (and this condition shall be written or printed, if deemed necessary by the Mayor, on the face of said bonds).

"Sec. 5. The acceptance by the officers of said railroad company of any portion of the bonds herein authorized to be issued shall bind said company to the terms and conditions of said subscription, as set forth in all the sections of this ordinance.

"I certify that the foregoing is a full, true, and perfect copy of the proceedings of the Mayor and Aldermen in the matter of the subscription to the Paducah and Memphis Railroad Company, as the same appears on the minutes of the board on the 5th day of June, 1872, now in my custody.

"Dyersburg, July 8, 1872. F. G. Sampson, *Recorder.*

Saturday, July 6, 1872.

"The Board of Mayor and Aldermen met at the court house this evening at candle-light.

"Present: Mayor Clark, Aldermen De Berry, McAllister, Miller, Painer, and Sampson.

fused by the court, to which plaintiff then and there duly excepted. The court thereupon rendered judgment in favor of defendant, supporting its judgment by reading the same opinion filed in the case of *Green* v. *Dyersburg*, 2 Flip. 477, and directing, by consent of counsel, that the said opinion be filed as its opinion in this case, and sent up with the transcript of the record, as required by the rules of the Supreme Court."

It is insisted by the plaintiff in error that there was express legislative authority for the issue of these bonds. The first statute relied on is the Act of the Legislature of Tennessee, approved January 23, 1871, chapter 50 of the Acts of 1870-71, entitled "An Act to Enforce Article 2, Section 29, of the Constitution, to Authorize the Several Counties and Incorporated Towns in this State to Impose Taxes for County and Corporation Purposes." This statute has been fully considered by us in the case of *Kelley* v. *Milan*, [*ante*], just decided, and shown to have conferred no such authority.

The Act approved December 16, 1871, chapter 122 of the Acts of 1871, entitled "An Act to Legalize and Authorize Subscription by Incorporated Cities and Towns for the Benefit of Railroad Companies Created by Law," applies only to cases where an incorporated town or city had subscribed to the capital stock of a railroad company prior to the passage of that Act. The subscription in the present case was not made until May 10, 1873, the election hav-

"The mayor reported to the board of aldermen that the people of the town of Dyersburg, by a vote of 126 votes 'for subscription' to 2 votes for 'no subscription,' have authorized the mayor and aldermen to subscribe $50,000 to the capital stock of the Paducah and Memphis Railroad Company, on the terms and conditions of the ordinance of June 5th, 1872.

"In pursuance of the ordinance passed by this board on the 5th day of June, 1872, which has been duly ratified by the legal majority of the qualified voters of the town of Dyersburg at the election today, on motion it is ordered, by unanimous consent, that the mayor be authorized to subscribe $50,000 at once to the capital stock of the Paducah and Memphis Railroad Company, on the terms and conditions of said ordinance.

"A true copy from the minutes.

"Attest: F. G. Sampson, *Recorder*."

"Which said resolution, having been duly seconded, was, upon motion, adopted. It was ordered that the power of attorney from C. P. Clark, Mayor of Dyersburg, to Isaac F. Child, of Dyersburg, Tennessee, be spread upon the records of the company. Said power of attorney is in words and figures as follows, to wit:

"Whereas, I am fully authorized and empowered, by the action of the board of mayor and aldermen of the town of Dyersburg, Dyer County, Tennessee, as well as by the vote of the people of the town ratifying that action, to subscribe fifty thousand dollars in the bonds of the town of Dyersburg (payable in ten years from date of issuance, and bearing seven per cent interest, payable semi-annually, from date of issuance), to the capital stock of the Paducah and Memphis Railroad Company; and whereas it is not convenient for me to go to Memphis now, and attend to said business in person, I have therefore nominated, and do hereby appoint and constitute, Isaac F. Child, of Dyersburg, Tennessee, my true and lawful agent, proxy, and attorney in fact to do and perform whatever acts and things it may be proper and necessary for me to do to effect and perfect said subscription, on the terms contained in my proclamation dated June 5th, 1872, hereby ratifying and confirming whatever my said attorney shall lawfully do in the premises, as if I did the same myself.

"July 8th, 1872. C. P. Clark,
Mayor of Dyersburg, Tennessee.

"State of Tennessee, *Dyer County*:

"Personally appeared before me, W. M. Watkins, clerk of the county court of said county, C. P. Clark, mayor of the town of Dyersburg, Tenn., who acknowledged the execution of the within instrument for the purposes therein contained. I further certify that I am personally acquainted with the said C. P. Clark.

"Witness my hand and seal of the Dyer County court, affixed at Dyersburg, July 10th, 1872.

"[Seal.] W. M. Watkins, *Clerk*,
By Zack Watkins, *D. C.*

"On motion of D. M. Henning, a resolution in words and figures as follows was adopted:

"*Resolved*, That the president of this company be authorized and instructed to call upon the town of Dyersburg for the bonds subscribed to the capital stock of the Paducah and Memphis Railroad Company, amounting to $50,000, as soon as the conditions of said subscription upon the part of the county are complied with."

"Jno. Overton, Jr., offered the following resolution, viz.:

"Whereas an obligation in the words and figures following has been executed and delivered to this company, to wit:

"We, the undersigned, citizens of the County of Dyer and State of Tennessee, for and in consideration that the President and Directors of the Paducah and Memphis Railroad Company have and do agree to build and locate their said road to and by the town of Dyersburg, Dyer County, Tenn., and locate and build a depot thereon within one half mile of the court house in said town, hereby guarantee a subscription to the capital stock of said company of one hundred thousand dollars in the following manner, that is to say:

"We guarantee that there will be voted by the citizens of the corporation of Dyersburg the sum of fifty thousand dollars, as a subscription to the capital stock of said company; and that said subscription will be paid in ten-year coupon bonds of said corporation, bearing interest at the rate of 7 per centum per annum, payable semi-annually; and that said bonds will be issued in accordance with the terms of a proclamation made by the mayor of said town, dated June 5th, 1872, and published in the 'Dyer County Progress' and 'Neal's State Gazette,' newspapers published in the town of Dyersburg; and that said bonds will be prepared as soon as practicable after being voted, and will be delivered to said company in accordance with the terms of said proclamation.

"We further agree that there will be subscribed to the capital stock of said Paducah and Memphis Railroad Company the sum of fifty thousand dollars of private individual subscription, by good and solvent subscribers, upon condition that said road is built and has a depot located within one half mile of the court house at Dyersburg, and payable as follows: Twenty-five per cent of the amounts of said private subscription, payable when the said road is constructed to the northern or southern line of said county, and work thereon is commenced in Dyer County, the balance subject to calls of ten per cent every thirty days.

"This latter amount of fifty thousand dollars we guarantee will be subscribed and delivered to said company on or before the 10th day of July, 1872.

"Witness our hands this June 20th, 1872.

"T. E. Richardson, Tom W. Neal, Jno. S. Kiffington, H. L. Fowlky, F. G. Sampson, C. I. Coker, W. M. Watkins, W. E. De Berry, P. E. Wilson, B. C. Burgis, W. C. Doyle, Wat. Sampson, S. R. Latta, I. F. Child, A. M. Stevens, C. P. Clark, W. P. Sugg, E. G. Sugg, J. E. Roberts, E. S. Thurmond, R. R. Watson, Jno. L. Webb, Alf. Stevens, Jno. Sawyer.

"*Therefore, resolved*, That this company accepts the said obligation and its stipulations, as the consideration for building and locating the road to and by the Town of Dyersburg and for building a depot thereon within half a mile of the court house in Dyersburg; and, in reliance of said obligation, the board agrees to so build and locate the road and so to locate the depot.

"2. That the $52,525 of private subscriptions this day tendered and received in pursuance of that portion of the above obligation which provides for the same, is accepted upon the guaranty of its solvency by the above named obligees."

"Which said resolution, having been seconded, was, upon motion, adopted."

ing been held on July 6, 1872; and the entire Act relates only to the validity and the legality of the subscription to stock, and in no manner touches the question of the issue of bonds.

It is also contended that express authority to issue the bonds in question was granted by section 20 of an Act passed February 26, 1869, chapter 59 of the Acts of 1868-69, which section is as follows: "Sec. 20. *Be it further enacted*, That it shall be lawful for the Town of [173] Dyersburg to make a corporate subscription to the capital stock of the Mississippi River Railroad Company, not to exceed fifty thousand dollars in amount, payable in not exceeding four years, by annual assessments, levied by the Board of Trustees of said Town, and collected as other moneys are; and bonds of the Town may be issued in anticipation of such collections, collected for town purposes: *Provided, however*, That before the Board of Trustees or Aldermen of said Town shall make any such subscription, the question shall have been first submitted to the qualified voters of said Town, and shall have received a majority of the votes cast therefor, after twenty days' notice of the time and place of holding said election, and of the amount proposed to be subscribed."

Reliance is also placed upon section 18 of an Act passed February 8, 1870, chapter 55 of the Acts of 1869-70, which section is as follows: "Sec. 18. *Be it further enacted*, That stock which has been subscribed, or may hereafter be subscribed, by any county, city, or incorporation, to said railroad companies, may be payable in six annual payments; and it shall be lawful for county courts and the corporate authorities of any city or town making such subscription to issue *short* bonds, bearing interest at the rate of six per cent per annum, to said railroad companies, in anticipation of the collection of annual levies, if thereby the construction of the roads can be facilitated."

As to the Act of 1869, the subscription to the stock, not to exceed $50,000, was made payable, by section 20, in not exceeding four years, by annual assessments of taxes. The express limitation was to the four years, but authority was given to issue the bonds of the Town in anticipation of the collection of taxes. Of course, under this provision, the bonds were to be paid by the four annual collections of the taxes levied by the four annual assessments. That was the fund provided for their payment. No authority was given for the issue of bonds other than such as were to be paid one fourth in one year, one fourth in two years, one fourth in three years, and one fourth in four years; and no authority was given for the issue of any bond payable in ten years.

[174] As to section 18 of the Act of 1870, it gave no power to the Town of Dyersburg beyond that conferred by the Act of 1869, to subscribe for stock or to issue bonds. The only possible effect it could have as to that Town was to modify section 20 of the Act of 1869, so as to make the subscription to stock payable in six annual payments, instead of four annual payments, and to authorize the issue of bonds in anticipation of the collection of the annual tax levies, the bonds to be payable in not exceeding six annual installments, instead of four; but each set of bonds to be still payable by an annual tax levy, and to fall due annually for six years, at the time of the maturity of the levy for each year.

That these statutory provisions did not authorize the issue of bonds payable in ten years is entirely clear. *Pulaski* v. *Gilmore*, decided by the Supreme Court of Tennessee, and published in 21 Fed. Rep. 870; *Milan* v. *Tennessee Cent. R. Co.* 11 Lea, 329.

The cases of *Louisville & N. R. R. Co.* v. *Davidson County Court*, 1 Sneed, 683, and *State* v. *Anderson County*, 8 Baxt. 249, do not sustain the position of the plaintiff in error. While, in each of those cases, the statute provided that not more than one third of the amount of the subscription should be collected in any one year, it did not prohibit its distribution into more numerous installments, each of less amount. Here the Acts in question prohibited any extension of time beyond four or six years, and the vote of the Town distinctly varied the terms fixed by the statute.

It is also contended by the plaintiff in error that the grant of power to subscribe for the stock carried with it the implied authority to issue negotiable bonds therefor. None of the cases cited by the plaintiff in error, decided outside of the State of Tennessee, establish such doctrine. The cases cited in Tennessee—*Union Bank* v. *Jacobs*, 6 Humph. 515; *Nichol* v. *Nashville*, 9 Humph. 252; *Adams* v. *Memphis & L. R. R. R. Co.* 2 Coldw. 645; *Moss* v. *Harpeth Academy*, 7 Heisk. 283; *State* v. *Anderson County*, 8 Baxt. 249, and *Williams* v. *Duck River Valley R. R. Co.* 9 Baxt. 488—do not maintain the doctrine contended for.

In the case in 6 Humphreys, it was held that [175] a railroad company, a private corporation, could contract a debt for a corporate purpose, and give a negotiable promissory note therefor. In the case in 9 Humphreys, there was express legislative authority to subscribe for stock and issue bonds, and the point decided was that a subscription by a municipality to railroad stock was a county or corporation purpose, within the provision of the Constitution empowering the Legislature to authorize counties and towns to impose taxes for county and corporation purposes. The case in 2 Coldwell was considered by this court in *Nashville* v. *Ray*, 86 U. S. 19 Wall. 468, 479 [22: 164, 169], and it was there said that the doctrines propounded in the opinion in 2 Coldwell, with reference to the implied powers of municipal corporations, were not necessary to the decision of that case. In the case in 7 Heiskell, the question was as to the power of a private corporation to borrow money. In the case in 8 Baxter there was express authority to issue the bonds, and the question of implied power did not arise, as was said by this court in *Claiborne County* v. *Brooks*, 111 U. S. 400, 411 [28: 470, 474]. In the case in 9 Baxter the question now under consideration does not appear to have been raised or discussed, the only question involved being whether the original subscription to the stock of the railroad company was valid.

On the contrary, the decision of the Supreme Court of Tennessee, in the case of *Pulaski* v. *Gilmore* and *Milan* v. *Tennessee Cent. R. R. Co.*, above cited, was, distinctly, that express legislative authority to issue bonds like those involved in the present suit was necessary. In harmony

with this view is the fact of the numerous instances in which the Legislature of Tennessee, after granting authority to municipalities to subscribe for stock in railroad companies, has also expressly granted the power to issue bonds therefor.

The views of this court on the subject of the implied power to issue municipal bonds were fully expressed in the cases of *Wells* v. *Pontotoc County*, 102 U. S. 625 [26: 122], and *Claiborne County* v. *Brooks*, 111 U. S. 400 [28: 470]. In the first of those cases it was held that the mere authority given to a municipality to subscribe for stock in a railroad company did not carry
[176] with it the implied power to issue bonds therefor, especially where, as in the present case, special provisions were made for paying the subscription by taxation.

Our views as to the proper construction of the general laws of Tennessee (Code of Tenn. §§ 1142, 1161) have been fully expressed in the case of *Kelley* v. *Milan* [*ante*,] just decided.

It is further contended for the plaintiff in error that this court should, in any event, hold the Town liable as upon non-negotiable bonds or notes, treating the issue of the negotiable bonds as an excess of authority only, and not invalidating the loan, with interest, as agreed upon. It is a sufficient answer to this proposition to say that this suit is brought solely for a recovery upon the bonds and coupons, and no question growing out of the liability of the Town for the subscription to the stock can be inquired into in this suit.

The judgment of the Circuit Court is affirmed.

---

[113] BENJAMIN LAWRENCE ET AL., *Plffs. in Err.*,

v.

EDWIN A. MERRITT, Late Collector of the PORT OF NEW YORK.

(See S. C. Reporter's ed. 113-116.)

Duty on paper—tissue paper.

1. The words "printing paper, unsized, used for books and newspapers exclusively," in section 2504, Revised Statutes, do not include what is called "tissue paper;" but such paper falls within the class of manufactures of paper not otherwise provided for, and is chargeable with a duty of 35 per cent *ad valorem*.

2. The use of tissue paper for making letter-press copies of letters or written matter does not make it "printing paper."

[No. 213.]

Argued April 10, 1888. Decided April 23, 1888.

IN ERROR to the Circuit Court of the United States for the Southern District of New York, to review a judgment for defendant in an action for the recovery of an alleged excess of duties paid on what is called "tissue paper." *Affirmed.*

The facts are fully stated in the opinion.

Mr. **Edwin B. Smith**, for plaintiffs in error:

The statutory language has not any occult and technical meaning.

Maillard v. *Lawrence*, 57 U. S. 16 How. 261 (14: 930).

Designation of articles by special description are designations of quality and material.

Barber v. *Schell*, 107 U. S. 621 (27: 492).

Where the Legislature designates articles by special description, as contradistinguished from a designation by a commercial name, the proper inquiry is as to their qualities and characteristics, with a view to ascertain if they come within the description.

Reimer v. *Schell*, 4 Blatchf. 328; *Marvel* v. *Merritt*, 116 U. S. 12 (29: 550); *Fisk* v *Arthur*, 103 U. S. 433 (26: 521); *Solomon* v. *Arthur*, 102 U. S. 211 (26: 147); *Greenleaf* v. *Goodrich*, 101 U. S. 278 (25: 845); *Swan* v. *Arthur*, 103 U. S. 598 (26: 526); *Newman* v. *Arthur*, 109 U. S. 138 (27: 885).

The opinion of commercial experts cannot be put in the place of that of the jury upon a question which was as well understood by the community at large as by merchants and importers.

Schmieder v. *Barney*, 113 U. S. 648 (28: 1131); *Arthur* v *Moller*, 97 U. S. 367, 368 (24: 1047).

Music to be bound up is a book.

Clayton v. *Stone*, 2 Paine, 382; *White* v. *Geroch*, 2 Barn. & Ald. 300.

So manuscript notes of a physician (*Willis* v. *Curtois*, 1 Beav. 189); patterns to cut dresses by (*Drury* v *Ewing*, 1 Bond, 540).

This was not a manufacture of paper; it was the article itself.

Hartranft v. *Wiegmann*, 121 U. S. 615 (30: 1014); *U. S.* v. *Potts*, 9 U. S. 5 Cranch, 284 (3: 102); *Frazee* v. *Moffitt*, 20 Blatchf. 267; *Smith* v. *Field*, 105 U. S. 53 (26: 1007).

The "and" in the phrase "books and newspapers" is not to be taken "conjunctively," but distributively, so as to cover all substances within the description, and is not to be confined to those which combine both characters.

Marvel v. *Merritt*, 116 U. S. 12 (29: 550); *Porter* v. *State*, 58 Ala. 66; *State* v. *McCoy*, 2 Speers, L. 716; *Streeter* v. *People*, 69 Ill. 595; *Miller* v. *State*, 3 Ohio St. 475; *State* v. *Myers*, 10 Iowa, 448; *State* v. *Smith*, 46 Iowa, 672, 673; *Foster* v. *Commonwealth*, 8 Watts & S. 80; *Barker* v. *Esty*, 19 Vt. 132; *Roome* v. *Phillips*, 24 N. Y. 470; *Boag* v. *Lewis*, 1 U. C. Q. B. 357; *Commonwealth* v. *Griffin*, 105 Mass. 185; *People* v. *Sweetser*, 1 Dak. 314.

Mr. **G. A. Jenks**, *Solicitor-Gen.*, for defendant in error:

The commercial designation of an article among traders and importers, when such denomination is clearly established, fixes its character for the purposes of the tariff laws.

Arthur v. *Lahey*, 96 U. S. 112 (24: 766).

Mr. Justice **Miller** delivered the opinion of [114]
the court:

This is a writ of error to the Circuit Court of the United States for the Southern District of New York.

The plaintiffs in error, Benjamin and Phineas Lawrence, brought suit in the court below against Edwin A. Merritt, the former Collector of the Port of New York, for the recovery of an alleged excess of duties levied by him and paid by them upon an importation of what is called "tissue paper." Schedule M of section 2504 of the Revised Statutes provides for the imposition of the following duties: "Paper, sized or glued, suitable only for printing paper, twenty-five per centum *ad valorem;* printing, unsized, used for books and newspapers exclusively, twenty per centum *ad valorem:*

manufactured of, or of which paper is a component material, not otherwise provided for, thirty-five per centum *ad valorem;* sheathing paper, ten per centum *ad valorem.*

The Collector classified the paper under the following clause on the same page:

"Paper hangings and paper for screens or fireboards; paper, antiquarian, demy, drawing, elephant, foolscap, imperial letter, and all other paper not otherwise provided for, thirty-five per centum *ad valorem.*"

The plaintiffs thereupon protested that the paper which they had imported, instead of being assessed as it was by the Collector under this latter clause, at 35 per cent *ad valorem,* should have been assessed under the former clause as "paper * * * printing, unsized, used for books and newspapers exclusively," at 20 per cent *ad valorem.* From the testimony it appears that it was what is generally called "tissue paper," and was mainly if not exclusively used for making letterpress copies of letters or written matter. This is a well known process, by which, after a letter has been written on ordinary paper, it is placed between the leaves of a book filled with this kind of paper, the pages upon which the copy is desired being usually dampened somewhat for that purpose, after which such book is subject to great pressure by means of a hand or other press. One [115] or more impressions may thus be made of the written matter upon the leaves of this tissue paper.

The judge of the circuit court, in speaking of the character of this paper, said to the jury: "I do not think that the words used in the statute have any technical meaning. You must take the statute as you find it, and a common sense view of the case, and say whether or not this paper which has been produced here is paper which is used exclusively for books and newspapers; and whether the lawmakers intended, when they used this language, that such paper as has been described to you should come in and pay duty under that clause of the statute which provides for paper used exclusively for books and newspapers."

He also said that if they found that it was not printing paper used exclusively for books and newspapers, and should not come under this clause, then their verdict should be for the defendant. At the request of the attorney for the defendant he also charged the jury that if they found, upon the evidence, that the phrase "printing paper," as used in the trade, has a technical signification, and if the plaintiffs' importation in this case does not come within that signification, they should find a verdict for the defendant.

The verdict and the judgment were for the defendant.

We are of opinion that the charge of the court was correct, and that the verdict and judgment which followed it are without error. It is very obvious from the face of the statute that "printing paper, unsized, used for books and newspapers exclusively," does not include the kind of paper in question in this case, and that it therefore falls within the class of manufactures of paper not otherwise provided for, so that it was properly chargeable with a duty of 35 per centum *ad valorem.*

An ingenious argument is made by plaintiffs' counsel to show that the process of transferring the writing made upon sheets of the ordinary writing paper used for that purpose, by causing the ink with which it was written to soak or penetrate through one or more thicknesses of the kind of tissue paper which this is said to be, after the same have been properly dampened, is printing within the meaning of the statute, and therefore this paper, being used for that purpose, is "printing paper." We however think it is perfectly clear that this process is not printing, and that the use of this kind of paper, which is in controversy here, for that purpose, does not make it "printing paper." [116]

The words of the statute, "paper, sized or glued, suitable only for printing paper," and "printing, unsized, used for books and newspapers, exclusively," evidently have reference to the various kinds of papers which are used for printing by means of type or plates, which make an impression only upon the face of the paper presented to them, and not to these kinds of tissue paper, so characterized on account of their thinness, used for the purpose of transferring writing by the penetration or soaking through of the liquid used therefor, so that the copy is read upon the side of the paper opposite to that presented in the original writing. The words of the statute cannot comprehend this species of tissue paper, which is merely used for the multiplication or copying of letters or other writings. Not being included within the true meaning of these phrases above quoted, it must, then, belong to that other and larger class of "all other paper not otherwise provided for." This is taxable at the rate of 35 per centum *ad valorem,* the amount which was actually levied and collected in this case.

We think the charge of the circuit judge on this subject, in connection with the testimony, was sound, and that it cannot be made much clearer by amplification.

The judgment of the Circuit Court is therefore affirmed.

ANDREW GLEASON, *Appt.,* [133]
v.
DISTRICT OF COLUMBIA.

(See S. C. Reporter's ed. 133-139.)

Certificates of board of public works—negligence of owner.

1. An owner of certificates of the Board of Public Works of the District of Columbia, who places them in the hands of a third person, with an unlimited indorsement and as collateral security, and who gives insufficient notice to the board of his interest in them, cannot afterwards recover their amount of the District of Columbia, where they had been previously paid to the parties presenting them to the Board of Audit, by certificates of that board, which were exchanged by the holders for bonds of the District.

2. The statute authorizing the Board of Audit gave notice to claimant that he must himself appear before that tribunal to assert his rights as against the holder of the certificates, or take some other steps to prevent their payment, and, if he did not, that his claim against the District might be lost. As he failed to appear before the board, he lost his certificates by his own negligence.

[No. 216.]

Argued April 10, 1888. Decided April 23, 1888.

APPEAL from a judgment of the Court of Claims, dismissing a suit brought upon certificates of the Board of Public Works of the District of Columbia. *Affirmed.*

Reported below in 19 Ct. Cl. 430.

The facts are fully stated in the opinion.

Messrs. **Eppa Hunton** and **V. B. Edwards**, for appellant:

These certificates were held in *Cowdrey* v. *Vandenburgh*, 101 U. S. 574 (25: 924), to be non-negotiable.

They passed by assignment to the several assignees subject to all the equities of the original owner or payee.

Connecticut Gen. L. Ins. Co. v. *Eldrege*, 102 U. S. 545 (26: 245).

Payment of a negotiable security after notice does not protect as to amount paid after notice.

Dresser v. *Missouri & I. R. Const. Co.* 93 U. S. 92 (23: 815).

Messrs. A. H. Garland, Atty. Gen., Robert A. Howard, Asst. Atty. Gen. and **F. P. Dewees**, *Asst. Atty.*, for appellee:

Claimant presented no claim for payment to the Board of Audit of the certificates in controversy.

Adams v. *Dist. of Columbia*, 17 Ct. Cl. 361.

If he did not appear and object to the payment of the certificates to other parties, when he might and ought to have done so, he is guilty of laches, and must be held to have allowed their payment in that manner without objection. In either case he has no cause of action.

Neuchatel Company's Case, 16 Ct. Cl. 600.

If one of two parties must lose through such a payment, it must be the one whose act authorized it to be made, and not the one who, on the face of the transaction, appears to have been innocent of any wrong.

Laughlin v. *Dist. of Columbia*, 116 U. S. 489 (29: 702).

Payment by the District to the person so invested with apparent authority, without notice of a want of actual authority, will discharge the debt.

Cowdrey v. *Vandenburgh*, 101 U. S. 572 (25: 923); *Looney* v. *Dist. of Columbia*, 118 U. S. 258 (28: 974;) *Adams* v. *Dist. of Columbia*, 17 Ct. Cl. 351.

[134] *Mr. Justice* **Miller** delivered the opinion of the court:

This is an appeal from the court of claims by the claimant, Andrew Gleason, who brought suit in that court against the District of Columbia, founding his demand upon certain certificates of the Board of Public Works, which were delivered to him, showing an indebtedness due on account of work done for the defendant, the District of Columbia.

It appears that Gleason borrowed money from one Rudolph Blumenburgh, to whom he gave his note for $30,000, due in sixty days, on the 18th of January, 1874, depositing as collateral security the certificates already mentioned, which he indorsed in blank. Before the maturity of that note Blumenburgh absconded. These certificates afterwards turned up, were presented to the Board of Audit for adjudication, and were allowed by it to the full amount expressed on their face; certificates of the Board of Audit being issued for them to the parties presenting them, while the original certificates of the Board of Public Works were canceled. The holders of these certificates of the Board of Audit afterwards received bonds of the District of Columbia, called 3.65 bonds, [135] in exchange therefor.

The Court of Claims finds that when Gleason discovered that Blumenburgh had absconded with his certificates of the Board of Public Works, he saw Magruder, treasurer of that board, and notified him that Blumenburgh had these certificates, protested against the payment of them, and also notified Mr. Shepherd, who was president of the Board of Public Works. It is a fair inference from this finding that this notification was given in a conversation, and was not in writing. The opinion of the Court of Claims speaks of it as a verbal notification.

On the 20th of June, 1874, Congress passed an Act, 18 Stat. at L. 116, abolishing the Board of Public Works, and creating a commission to exercise all the power and authority theretofore lawfully vested in the Governor or Board of Public Works of the District, with certain limitations. By the 6th section of that Act the First and Second Comptrollers of the Treasury of the United States were constituted a board of audit "to examine and audit for settlement," among other things, "the debt purporting to be evidenced and ascertained by certificates of the auditor of the Board of Public Works." In this class of debts were, of course, included the certificates issued to Gleason and by him indorsed to Blumenburgh. The character of this board and its functions are commented on in the case of *Laughlin* v. *District of Columbia*, 116 U. S. 485 [29: 701].

On the 13th day of October, 1874, four months after the passage of this bill, after the creation of the Board of Audit and after the powers of government in the District of Columbia had been transferred to the Commissioners, Gleason filed his bill in equity in the Supreme Court of the District against the Commissioners, the Board of Audit, the Comptroller of the District of Columbia, and the Sinking Fund Commissioners of the District, alleging that he was the owner of the certificates now the subject of controversy. A restraining order was made enjoining the issuing of certificates, and Blumenburgh from receiving them, but on the 5th day of November afterwards this restraining order was, at the instance of the members of the [136] Board of Audit, and on general demurrer, dissolved so far as it affected the members of that board. There is no finding, nor any evidence in the record, as to what became of that suit, so far as it related to the Commissioners and Comptroller of the District, the Sinking Fund Commissioners, and Blumenburgh.

As the finding shows that 3.65 bonds, negotiable on their face, were issued for the entire amount of the certificates of the Board of Audit, it is clear that if Gleason recovers in this action the District of Columbia will have to pay twice the amount of his recovery. We think it equally clear, under the facts of the case, that the fault in the matter lies with Mr. Gleason. He placed his original certificates, which were issued by the Board of Public Works, in the hands of Blumenburgh with an

unlimited indorsement, when he might have made a statement that they were held as security for the sum which he had borrowed. He knew, as the Court of Claims finds to be the fact, that this class of securities was bought and sold in the open market by the moneyed men of the District of Columbia, and that they were treated and considered as negotiable instruments. Although this court has decided that they were not in the full sense of that term negotiable as commercial paper, yet Gleason must have known that he was placing them in the hands of Blumenburgh in a manner and in a condition which would enable him to perpetrate a fraud, either upon Gleason himself, or upon some other person to whom he might sell them. When he discovered that Blumenburgh had absconded, and that his certificates could not be found, the steps which he took to protect himself or the District of Columbia were very inefficient as compared with what he might have taken, since he merely gave a verbal notice of the facts to Shepherd and Magruder, the president and treasurer, respectively, of the Board of Public Works. He made no representations in writing, giving an accurate and full description of the certificates, as he might have done. He might also, while the Board of Public Works was an existing body, have brought his suit against them of the same character as the one he afterwards brought against [137] the Commissioners and the Board of Audit. This he did not do, but, on the contrary, when he finally initiated legal proceedings, the parties to whom he had given the notice were no longer officers of the District of Columbia, nor is there any evidence that the statement or warning which he gave to Shepherd and Magruder ever came to the knowledge of the Commissioners, or was brought to the attention of the other proper officers of the District, who might have been bound in a decree in the case.

As to the Board of Audit, it is very clear that the Supreme Court of the District could not rightfully, at the instance of Gleason, enjoin it from the proceeding to perform the very duty which was appropriate to that condition of affairs then existing, namely: to audit the claims represented by these certificates, to determine whether the District of Columbia was responsible for them, and, if so, to whom it was responsible. The Board of Audit, in accordance with the statute under which it was created, gave public notice that it would hear and examine into all these claims. Mr. Gleason seems to have contented himself with the very imperfect notice which he had given to the persons representing the District Government. He did not appear before the Board of Audit at any time; he does not seem to have inquired whether these certificates were presented before them, or to have made any effort to ascertain whether they would consider them, or when their examination would be undertaken. He offered no evidence of his interest in or his right to the certificates. They came before that board, as it is fair to presume, with the indorsements and transfers upon them, so that *prima facie* a case was made out entitling the parties who presented them to receive the certificates of the board for their amount.

In thus standing aloof, and supposing, if he did so suppose, that the Board of Audit would hunt up the evidence of the fact that he had an interest in the certificates, and take upon itself the business of presenting a case against the certificates as they came before it, of which claim it knew nothing and had no evidence, and which Gleason himself did not come forward to establish, he was guilty of the grossest negligence,—a negligence which must now pre- [138] vent him from recovering against the District of Columbia the amount of those certificates, or any part of them. Throughout the whole transaction he has shown a want of diligence and care; first, by placing in the possession of Blumenburgh, with an unlimited indorsement, these instruments for which he received an advance of the amount of money agreed upon between them; and, second, by the imperfect notices that he gave when he found that Blumenburgh had absconded with his certificates. The efforts he then made to protect himself or the District of Columbia were wholly inefficient, and not such as the case required of him. Verbal notice in a conversation with the president and treasurer of the Board of Public Works, even if that body had continued in existence, was not such notice as the case demanded. His entire neglect, also, to make any appearance before the Board of Audit, or to assert any claim before that body, established especially for the purpose of adjudicating upon such claims as his against the Board of Public Works; and his knowledge of the fact that he had himself placed in the hands of others the means of asserting the claim which he now brings against the District of Columbia,—are all evidence of such laches and neglect as in our judgment precludes his right to recover in this action.

The principle on which this case was decided in the Court of Claims was, we think, established by the judgment of this court in *Laughlin* v. *District of Columbia*, already cited. There the court said: "The statute authorizing the Board (of Audit) gave notice to Laughlin (who was in a similar condition to Gleason) that he must himself appear before that tribunal to assert his rights as against the holder of his certificates, or take some other steps to prevent their payment, and, if he did not, that his claim against the District might be lost. The board, even if his letter had been brought to its attention, would not have been compelled to give him any other notice to appear than that which he already had. As he failed to appear at all, there was nothing for the board to do but to act upon the evidence which was before it, and decide accordingly."

That is precisely what was done in the present case. *We think the judgment of the Court of Claims in the matter was correct, and it is accordingly affirmed.* [139]

MORTON MARYE, Successor to S. BROWN ALLEN, Auditor of Public Accounts of the STATE OF VIRGINIA, *Appt.*, [117]

v.

BALTIMORE AND OHIO RAILROAD COMPANY.

(See S. C. Reporter's ed. 117-125.)

Virginia law—taxation of railroads.

1. Chapter 119 of the laws of Virginia of 1881-1882, in regard to taxation of railroads, has no application to the rolling stock owned by the Baltimore and Ohio Railroad Company, a corporation of Maryland, employed by it in the operation of other railroads in Virginia, and such Company is not liable to taxation for such property under said Act. That Act applies to Virginia corporations.

2. For purposes of taxation, the *situs* of the personal property of a railroad company may be fixed in whatever locality the property may be brought and used by its owner, by the law of the place where it is found.

[No. 223.]

Argued April 12, 1888. Decided April 23, 1888.

APPEAL from a decree of the Circuit Court of the United States for the Western District of Virginia, enjoining the sale of engines and cars of the Baltimore and Ohio Railroad Company for a tax. *Affirmed.*

Opinion below, *sub. nom. Baltimore & O. R. Co.* v. *Allen*, 22 Fed. Rep. 876.

The facts are fully stated in the opinion.

Mr. **R. A. Ayers,** *Atty-Gen. of Virginia*, for appellant.

Messrs. **John K. Cowen, Hugh W. Sheffey,** and *Hugh L. Bond, Jr.*, for appellee:

In the absence of legislation to the contrary, the *situs* for taxation of the personal property of a corporation is at its domicil, which is the State of its creation, and, within that State, in the town where it has its principal office or place of business.

Burr. Tax. 186; *Orange & A. R. R. Co.* v. *Alexandria*, 17 Gratt. 176; *Philadelphia, W. & B. R. R. Co.* v. *Appeal Tax Court*, 50 Md. 415; *Appeal Tax Court* v. *Pullman Palace Car Co.* 50 Md. 452; *Appeal Tax Court* v. *Northern Cent. R. Co.* 50 Md. 417; *St. Louis* v. *Wiggins Ferry Co.* 78 U. S. 11 Wall. 425 (20:192); *Hays* v. *Pacific Mail Steamship Co.* 58 U. S. 17 How. 596 (15:254); *Pacific R. R. Co.* v. *Cass County*, 53 Mo. 31, 32.

Mr. Justice **Matthews** delivered the opinion of the court:

This is a bill in equity filed by the Baltimore and Ohio Railroad Company against the taxing officer of the State of Virginia, for the purpose of enjoining him from selling certain engines and cars, the property of the complainant, for the payment of a tax alleged to have been illegally assessed thereon. There was a decree in the circuit court granting the relief prayed for, from which this appeal is prosecuted.

The material facts in the case are these: The Baltimore and Ohio Railroad Company is a corporation organized under the laws of Maryland, and a citizen thereof, by virtue of whose charter its rolling stock is exempt from taxation. The line of its road does not at any point lie in the State of Virginia. It, however, connects with certain roads belonging to corporations incorporated by various Acts of the Legislature of Virginia, to wit: the Winchester and Potomac Railroad, the Winchester and Strasburg Railroad, and the Strasburg and Harrisonburg Railroad, the last named being a part of the old Manassas Gap Railroad; and, during a portion of the time embraced in the period for which the taxes in question were levied, it worked the Valley Railroad from Harrisonburg to Staunton. All of these roads were [118] operated by the Baltimore and Ohio Railroad Company by virtue of leases or contracts, which Company for that purpose furnished and used its own rolling stock, consisting of engines and cars. None of the Virginia corporations owning either of these roads was the owner of any rolling stock. The manner in which this rolling stock was employed for this purpose is thus described: "There is no such rolling stock assigned permanently to the four lines above named, or either of them, in the State of Virginia. The trains in which the rolling stock is used on the four lines above named now start from Lexington, Virginia, and pass through the State of Virginia, over the four lines of railroad above named, into the State of West Virginia, and thence into the State of Maryland to the City of Baltimore, or, if any of the cars are destined to western points, thence from Harper's Ferry to the West; but the trains in which the cars are hauled are run solid from Lexington, Virginia (and formerly, before the road was completed to Lexington, from Staunton, Virginia), to Baltimore. None of the rolling stock is assigned permanently to service in the State of Virginia, nor is any of the rolling stock set apart to the four lines in that State, or to the four Valley lines above mentioned, at all; but such rolling stock is used interchangeably upon the main line and branches of the Baltimore and Ohio Railroad in the States of Maryland and Virginia, and, indeed, also upon the divisions of the Baltimore and Ohio Railroad in Pennsylvania, and in States west of the Ohio River, just as the necessities of the service of the Company require. Sometimes this rolling stock will be found on the main line, sometimes on the Pittsburg division, and sometimes on the trans-Ohio divisions, and there is none of it that is permanently set apart for use upon the four Valley lines in Virginia above described."

The several Virginia corporations owning these four railroads, respectively, made their annual reports to the auditor of public accounts as required by law, and were by the board of public works duly assessed on their roadways, tracks, depots, and other real estate owned by them. No tax was assessed or levied as against them on account of any rolling stock, because [119] they were not reported to be the owners of any. In the month of June, 1883, the Auditor of Public Accounts for the State of Virginia assessed the Baltimore and Ohio Railroad Company for taxes on its rolling stock used on these roads for the years from 1870 to 1881, inclusive, amounting in the aggregate, for eleven years, to the sum of $22,249.25, and placed the assessment in the hands of the treasurer of Augusta County, Virginia, for collection. This officer was proceeding to collect these taxes by a distraint of the rolling stock in question, the property of the complainant, when his proceedings were arrested by the injunction of the circuit court, afterward made perpetual by its final decree.

The Act of the General Assembly of the State of Virginia, under which the assessment and collection of these taxes are sought to be justified, is contained in section 20, chapter 119, of the Acts of the Virginia Legislature, session of 1881, 1882, being part of the taxing laws of the State originally enacted in 1870 and 1871, and continued, with amendments, to the present time. The material part of the Act applicable to this case is as follows:

"19. Every railroad and canal company not exempted from taxation by virtue of its charter shall report annually, on the first day of June, to the auditor of public accounts, all of its real and personal property of every description as of the first day of February of each year, showing particularly in what county or corporation such property is located, and classifying the same under the following heads:

"First. Roadway and track, or canal bed.

"Second. Depots, depot grounds and lots, station buildings and fixtures, and machine shops.

"Third. Real estate not included in other classes.

"Fourth. Rolling stock, including passenger, freight, cattle or stock, baggage, mail, express, sleeping palace, and all other cars owned by or belonging to the company; boats, machinery, and equipments; houses and appurtenances occupied by lock-gate keepers and other employees.

"Fifth. Stores.

"Sixth. Telegraph lines.

[120] "Seventh. Miscellaneous property.

"Every such company shall also report, on or before the first day of June of each year, the gross and net receipts of the road or canal for the twelve months preceding the first day of February of each year, and in all cases the report shall be so made as to give the data on which the same is made. If such road or canal is only in part within the Commonwealth, the report shall show what part is within the Commonwealth and what proportion the same bears to the entire length of the road or canal, and shall apportion the receipts accordingly. The report herein required shall be verified by the oath of the president or other proper officer. Upon the receipt of every such report it shall be the duty of the auditor of public accounts to lay the same before the board of public works, who shall, after thirty days' notice previously given to the president, treasurer, or other proper officer, proceed to ascertain and assess the value of the property so reported, upon the best and most reliable information that can be procured, and to this end shall be authorized and empowered to send for persons and papers should it be deemed necessary. A certified copy of the assessment, when made, shall be immediately forwarded by the secretary of the board to the president or other proper officer of every railroad or canal company so assessed, whose duty it shall be to pay into the treasury of the State, within sixty days after the receipt thereof, the tax which may be imposed thereon by law. A company failing to make such report, or to pay the tax assessed upon its property, shall be immediately assessed, under the direction of the auditor of public accounts, by any person appointed by him for the purpose, rating their real estate and rolling stock at twenty thousand dollars per mile; and a tax shall at once be levied on such value at the annual rate levied upon the value of the other property for the year. Such tax so levied, as well as the sum required to be paid upon the report hereinbefore mentioned, if the same be not paid at the time provided herein, shall be collected by the treasurer of some county in which such company owns property, to whom the auditor may deliver the assessment or a copy thereof. The treasurer may distrain and sell any personal property of [121] such company, and shall pay the taxes into the treasury within three months from the time of the assessment, or a copy as aforesaid may be delivered to him. The compensation of such treasurer to be the same as he receives for collecting other taxes in his county or corporation."

It is admitted that this is the only legislation of the State of Virginia under which the tax in question can be justified; if it does not warrant the proceedings, there is no statute which does. The single question presented in the case is whether the Baltimore and Ohio Railroad Company, as to the property on account of which it is sought to be taxed, is liable to taxation under the provisions of this Act.

It is not denied, as it cannot be, that the State of Virginia has rightful power to levy and collect a tax upon such property, used and found within its territorial limits as this property was used and found, if, and whenever, it may choose, by apt legislation, to exert its authority over the subject. It is quite true, as the *situs* of the Baltimore and Ohio Railroad Company is in the State of Maryland, that also, upon general principles, it is the *situs* of all its personal property; but for purposes of taxation, as well as for other purposes, that *situs* may be fixed in whatever locality the property may be brought and used by its owner, by the law of the place where it is found. If the Baltimore and Ohio Railroad Company is permitted by the State of Virginia to bring into its territory and there habitually to use and employ a portion of its movable personal property, and the Railroad Company chooses so to do, it would certainly be competent and legitimate for the State to impose upon such property, thus used and employed, its fair share of the burdens of taxation imposed upon other similar property used in the like way by its own citizens. And such a tax might be properly assessed and collected in cases like the present, where the specific and individual items of property so used and employed were not continuously the same, but were constantly changing, according to the exigencies of the business. In such cases the tax might be fixed by an appraisement and valuation of the average amount of the property [124] thus habitually used, and collected by distraint upon any portion that might at any time be found. Of course the lawfulness of a tax upon vehicles of transportation used by common carriers might have to be considered in particular instances with reference to its operation as a regulation of commerce among the States, but the mere fact that they were employed as vehicles of transportation in the interchange of interstate commerce would not render their taxation invalid. No question on that account arises in this case.

But looking at the statute under which the proceeding in question has been taken for the taxation of this property, we think it quite clear that it has no application to the rolling stock owned by the Baltimore and Ohio Railroad Company, employed by it, in the manner described, in the operation of other railroads in Virginia. The terms of the Act, indeed, include "every railroad and canal company not exempted from taxation by virtue of its char-

ter," but that language, according to a general rule of interpretation must be confined to corporations deriving their authority from the laws of Virginia. It is apparent, also, from the other expressions contained in the law, as well as its whole purview, that it was intended to apply only to such domestic corporations, as, in the case of railroad companies, were the owners of railroads and the property usually appurtenant thereto, lying and being within the State. According to the description of the Act, the railroad company is supposed to own a roadway and track, and depots, depot grounds, station buildings and fixtures, and machine shops, together with real estate, rolling stock, and telegraph lines. Every such company is required to report its gross and net receipts, and a specific provision is made that if its road is only in part within the Commonwealth, the report shall show what part is so, and what proportion the same bears to its entire length, apportioning the receipts accordingly. In case of a failure of the company to make such a report, or to pay the tax assessed upon its property, it is provided that it shall be immediately assessed under the direction of the auditor of public accounts by some person appointed by him for that purpose, rating its real [125] estate and rolling stock at $20,000 per mile, on which a tax shall be levied at the annual rate levied upon the value of other property for the year. None of these provisions are applicable to the case of the Baltimore and Ohio Railroad Company in respect to its ownership of the rolling stock in question.

It follows from this that it was not liable for the payment of the taxes the collection of which was enjoined by the decree of the circuit court.

That decree is accordingly affirmed.

---

[176] JAMES FORNCROOK, *Appt.*,
v.
AMOS I. ROOT.

(See S. C. Reporter's ed. 176-181.)

Letters patent—patentable novelty.

1. In an action for the infringement of letters patent granted to James Forncrook June 28, 1881, for an improvement in honey frames,—*Held*, that, upon the evidence, the manufacture of honey frames by bending and uniting the ends of a blank consisting of a single piece, as described in this patent, was not, at the date of the alleged invention, a patentable novelty.

2. *Held*, that the comb foundation or attachment made by the putting, by the user, of pieces of wax on the section, as used by defendant, is not a mechanical equivalent in the blank for the longitudinal groove mentioned in the specification of plaintiff's patent.

[No. 225.]

Argued April 13, 1888. Decided April 23, 1888.

APPEAL from a decree of the Circuit Court of the United States for the Northern District of Ohio, dismissing a suit brought by the appellant for the infringement of letters patent. *Affirmed.*

Opinion below, 21 Fed. Rep. 328.

The facts are fully stated in the opinion.

Mr. **William P. Wells** for appellant:

Novelty is not negatived by any printed publication, unless the information contained therein is full enough and precise enough to enable any person skilled in the art to which it relates to make the thing covered by the patent sought to be anticipated.

Seymour v. *Osborne*, 78 U. S. 11 Wall. 516 (20:33); *Downton* v. *Yeager Milling Co.* 108 U. S. 466 (27:789).

As to what constitutes invention is a question of fact in every case.

Poppenhusen v. *Falke*, 5 Blatchf. 49.

Want of invention cannot be predicated of a device or process which first reached the particular result.

Webster Loom Co. v. *Higgins*, 105 U. S. 591 (26:1181).

The question of sufficiency of invention is whether the alleged patentable subject possesses the statute requisites of novelty and utility.

McCormick v. *Seymour*, 2 Blatchf. 240, 243; *Atlantic Works* v. *Brady*, 107 U. S. 192 (27:438); *Phillips* v. *Detroit*, 111 U. S. 604 (28:532); *Smith* v. *Goodyear Dental Vulcanite Co.* 93 U. S. 495 (23:954).

A suggestion made to a patentee will not render his patent invalid, unless it enables him to construct the thing patented without the exercise of inventive thought on his part.

Alden v. *Dewey*, 1 Story, 336; *Pitts* v. *Hall*, 2 Blatchf. 234; *Agawam Co.* v. *Jordan*, 74 U. S. 7 Wall. 602 (19:181); *Union Paper Collar Co.* v. *Van Deusen*, 90 U. S. 23 Wall. 562 (23:133).

The grant of letters patent is *prima facie* evidence that the patentee is the first inventor.

Smith v. *Goodyear Dental Vulcanite Co.* 93 U. S. 486 (23: 952); *Lehnbeuter* v. *Holthaus*, 105 U. S. 94 (26: 939).

The burden of proof to make good this defense is upon the party setting it up.

Coffin v. *Ogden*, 85 U. S. 18 Wall. 120, 124 (21:821, 823); *Cantrell* v. *Wallick*, 117 U. S. 695 (29:1019).

In order to defeat appellant's patent, public use, for more than two years before application, of defendant's own invention, by persons named, must be alleged and proved.

Consolidated Fruit Jar Co. v. *Wright*, 94 U. S. 94 (24:68); *Egbert* v. *Lippmann*, 104 U. S. 333 (26:755); *Hall* v. *Macneale*, 107 U. S. 90 (27:367).

Actual abandonment is the result of intention. Such intention must be proved. It is not shown by a mere sale.

Pitts v. *Hall*, 2 Blatchf. 238; *McCormick* v. *Seymour*, Id. 256; *Russell & E. Mfg. Co.* v. *Mallory*, 10 Blatchf. 141, 151.

No substitution of an equivalent for any element or ingredient of a combination covered by any claim of a patent can avert a charge of infringement of that claim.

Gill v. *Wells*, 89 U. S. 22 Wall. 1 (22:699); *Imhaeuser* v. *Buerk*, 101 U. S. 656 (25:945).

Two inventions are substantially alike when they perform substantially the same thing in substantially the same way.

Union Paper Bag Machine Co. v. *Murphy*, 97 U. S. 120 (24:935); *Cantrell* v. *Wallick*, *supra*.

By the manufacture and sale of parts of a patented invention, where it is intended that the purchaser shall supply the omitted parts, there is an infringement.

Richardson v. *Noyes*, 2 Ban. & Ard. 398; *Wallace* v. *Holmes*, 5 Fish. Pat. Cas. 37.

There are two classes of combinations recognized by the patent laws, which are properly the subject of a patent.

Lee v. *Blandy*, 2 Fish. Pat. Cas. 93.

A combination patent is one in which all the elements enter into it so as to qualify every other.

Hailes v. *Van Wormer*, 87 U. S. 20 Wall. 368 (22:248); *Pickering* v. *McCullough*, 104 U. S. 310 (26:749); *Reckendorfer* v. *Faber*, 92 U. S. 357 (23:723); *Webster Loom Co.* v. *Higgins*, 105 U. S. 591 (26:1181); *Gage* v. *Herring*, 107 U. S. 640 (27:601).

Messrs. **M. D. Leggett** and **Joseph A. Osborne**, for appellee:

None of the features found in appellant's device perform any different functions from what they did in earlier honey frames, and none of them perform any joint function.

It is a mere aggregation of devices, and cannot be considered an invention.

Curt. Pat. § 111 *c;* Walker, Pat. § 32; *Hailes* v. *Van Wormer*, 87 U. S. 20 Wall. 353, 354, 368 (22: 241, 248); *Reckendorfer* v. *Faber*, 92 U. S. 347, 357 (23: 719, 723); *Pickering* v. *McCullough*, 104 U. S. 310, 318 (26: 749, 751).

The most liberal construction the court can give the patent is that it is for a combination.

Curt. Pat. § 249; *Neilson* v. *Harford*, 1 Web. Pat. Cas. 317.

The patentee, by the restricted form of his claim, made the groove a material part of his device, and the court cannot declare that it is immaterial.

U. S. Rev. Stat. § 4888; *Union Water-Meter Co.* v. *Desper*, 101 U. S. 332, 337 (25:1024, 1026); *Gage* v. *Herring*, 107 U. S. 640, 648 (27:601, 604.)

[177] *Mr. Justice* **Blatchford** delivered the opinion of the court:

This is a suit in equity, brought in the Circuit Court of the United States for the Northern District of Ohio, by James Forncrook against Amos I. Root, for the infringement of letters patent of the United States No. 243,-674, granted to the plaintiff, June 28, 1881, for an "Improvement in sectional honey frames," on an application filed May 13, 1879.

The specification, claim, and drawings of the patent are as follows:

"Be it known that I, James Forncrook, of Watertown, in the County of Jefferson and State of Wisconsin, have invented certain new and useful improvements in sectional honey frames, and I do hereby declare the following to be a full, clear, and exact description of the invention, such as will enable others skilled in the art to which it appertains to make and use the same, reference being had to the accompanying drawings, and to letters of reference marked thereon, which form a part of this specification. This invention relates to an improvement in sectional honey frames, the object being to so construct them that they shall be stronger and in a more portable form than the frames now used for such purposes; and the invention consists essentially in forming the frames from a single blank or piece of material having all the necessary grooves and recesses required to form a complete frame cut in it, the ends of the blank being notched or dentated, and angular grooves cut across it at those points which are to form the corners. These blanks, after being thus prepared, may be packed solidly in boxes, or otherwise, for transportation, and, when required for use, are bent into the square forms, and their ends united at one of the corners, by means of the interlocking notches or teeth, thus forming a complete frame ready for use. In the drawings, Fig. 1 is a plan of one of the blanks, showing the various recesses and grooves with which it is supplied. Fig. 2 is an edge view [178] of the blank, and shows the form and depth of the angular grooves which form the corners of the frame. Fig. 3 shows the blank bent into a square form, with the ends united, making a complete frame ready for use. Fig. 4 shows a modification of the groove, or miter, *c*, Fig. 2. The blanks for these frames are preferably formed from some light, tasteless, and comparatively tough wood, which will bend at the corners without steaming or boiling, such as basswood or whitewood, the material being produced by cutting it from the log in the form of a thick veneer, or by sawing into thin stuff and then planing both surfaces. The blanks A are then cut from this material, of the proper width and length, the ends dentated, as shown at *a a*, by means of a series of circular saws placed close together upon an arbor or other suitable tool, so that they will interlock when brought together. The recesses *b b* are then formed in its edges, at such points in its length as will bring them at the top and bottom of the frames when set up in the hive. These recesses form openings which allow space for the passage of the bees between the frame, and for the ventilation of this part of the hive. Three triangular grooves, *c c c*, are then cut across the blank at such points in its length as will divide it into four nearly equal parts, each of which forms one side of the frame after the blank is bent into a quadrangular shape. These triangular grooves are cut nearly through the blank, sufficient wood only being left to hold the parts firmly together. As the sides of the grooves *c* are inclined toward each other at a right angle, it follows that, when the blank is bent into the form of a frame, these grooves make perfectly fitting interjoints at three of its corners, the fourth corner being that at which the ends of the blank are united to each other by means of the interlocking teeth formed thereon. In one of these spaces, between two of the grooves *c*, and preferably that which will form the top of the frame when placed in the hive, is formed a longitudinal groove, *d*, for the guide-strip, which makes a secure point of attachment for the comb, when the bees begin to build in the frames set side by side in the hive, with the parts of the frame containing the recesses *b b* at top. These frames meet a want long felt [178 by beekeepers, as those in common use are either dovetailed or nailed together at the corners, and, if set up at the manufactory, form a large bulk for transportation, and are very liable to breakage in handling; but, if sold to the user in pieces, to be put together by him, the numerous joints to be made cause loss of time and produce a very fragile article when finished, which loses its rectangular shape with

the slightest rough usage, as the joints at the corners lack the necessary strength and rigidity to hold them in shape. My frame will be found to possess none of the above named defects, as it is intended for transportation in solid packages before being set up, and, when set up, possess great strength and rigidity, preserving its form without difficulty during all the rough handling to which such frames are frequently subjected. Having thus described my invention, I claim as new, and desire to secure by letters patent, the following: As a new article of manufacture, a blank for honey frames formed of a single piece of wood, having transverse angular grooves *c*, longitudinal groove *d*, and recesses *b*, all arranged in the manner shown and described."

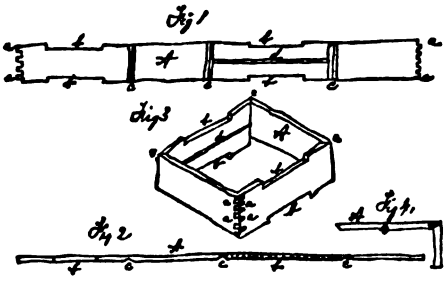

[180] The answer sets up as defenses noninfringement and want of novelty. After issue joined, proofs were taken on both sides, and the circuit court, on a hearing, dismissed the bill. Its decision is reported in 21 Fed. Rep. 328.

The plaintiff does not carry his invention further back than the summer or late spring of 1877. The answer sets up that the same invention as that patented was known to Alexander Fiddes, who resides at Centralia, in the State of Illinois, as early as May or June, 1873.

The circuit court, in its decision, said that if the patentee was entitled to claim the blank for honey frames as a new and useful device, it was because it is a constituent of the frame or section into which it is formed by bending, no matter who bends it, whether the maker or purchaser for use; and that, if the state of the art at the date of the alleged invention was such that the patentee could not claim as his invention the honey frame or section when formed by bending and uniting the ends of such a frame, he, for the same reason, could not claim as his invention such a blank for the purpose of forming it into a frame or a section. The opinion then proceeded: "The question, therefore, is whether, upon the evidence, at the date of the alleged invention, the manufacture of honey frames or sections, by bending and uniting the ends of a blank consisting of a single piece, substantially as described in this patent, was a patentable novelty. Upon a careful comparison and consideration of all the evidence this question must be answered in the negative. Alexander Fiddes testifies to making and using honey sections formed from a single piece, grooved, bent, and united at the ends, as early as 1872 and 1873, some of which he sold to others for use; and if those now made by the complainant under his patent are superior in any respect to the first specimens of the manufacture, it is merely in point of finish and workmanship. There is no difference whatever in principle, and the early examples were complete and practical frames, actually used and perfectly serving the purpose, so that they cannot be considered as rude and imperfect experiments subsequently developed into a successful manufacture." We concur in these views of the circuit court.

In addition to this, the claim of the patent is [181] as follows: "As a new article of manufacture, a blank for honey frames, formed of a single piece of wood, having transverse angular grooves *c*, longitudinal groove *d*, and recesses *b*, all arranged in the manner shown and described." The description in the specification states that "the invention consists, essentially, in forming the frame from a single blank or piece of material having all the necessary grooves and recesses required to form a complete frame cut in it." It also says that "in the drawings Fig. 1 is a plan of one of the blanks, showing the various recesses and grooves with which it is supplied." One of those grooves is the longitudinal groove *d*. The description further says: "In one of these spaces, between two of the grooves *c*, is formed a longitudinal groove, *d*, for the guide strip, which makes a secure point of attachment for the comb when the bees begin to build in the frames, set side by side in the hive, with the parts of the frame containing the recesses *b b* at the top." Thus the longitudinal groove *d* is made by the patentee a necessary element in the structure. The defendant's structure has no longitudinal groove, and no substitute or equivalent for it. *Fay* v. *Cordesman*, 109 U. S. 408 [27: 979]; *Yale Lock Mfg. Co.* v. *Sargent*, 117 U. S. 373 [29: 950]; *Dryfoos* v. *Wiese*, 124 U. S. 32 [*ante*, 362].

It is urged by the plaintiff that it is shown that the defendant's section is to be used with the comb foundation or attachment made by the putting, by the user, of pieces of wax on the section. But this is not a mechanical equivalent in the blank for the longitudinal groove, any more than, in *Gage* v. *Herring*, 107 U. S. 640, 648 [27: 601, 604], the person who shoveled or swept up, by manual labor, the meal deposited upon the floor of the dust-room, was a mechanical equivalent, in the sense of the patent law, for the automatic conveyer-shaft in the dust-room.

The decree of the Circuit Court is affirmed.

UNITED STATES, *Appt.*, [125]

v.

JOSEPH C. IRWIN ET AL.

SAME, *Appt.*,

v.

CHARLES A. PERRY ET AL.

(See S. C. Reporter's ed. 125-133.)

Act of July 8, 1886—amount of claim.

1. The Act of Congress of July 8, 1886, referring certain claims to the court of claims for adjudication, authorizes that court to give a final judgment against the United States.

2. The reference made by such statute is limited to a judgment for property taken and impressed into the service, and for property sold to the Gov-

ernment; and does not embrace allowances for losses consequent upon the refusal of Colonel Johnston to permit plaintiffs' trains to proceed upon their journey, arising from the mere delay and detention occasioned thereby.

[Nos. 1384, 1385.]

Submitted April 2, 1888. Decided April 23, 1888.

APPEALS from judgments of the Court of Claims in favor of claimants, for property taken and impressed by the United States, and for damages for the detention and delay of claimants' trains. *Reversed, and remanded* for more definite and specific findings.

The facts are fully stated in the opinion.

Messrs. **A. H. Harland,** *Atty-Gen.*, and **Robert A. Howard,** *Asst. Atty-Gen.*, for appellant.

Messrs. **Wm. E. Earle** and **James L. Pugh, Jr.,** for appellees.

[126] *Mr. Justice* **Matthews** delivered the opinion of the court:

Congress passed an Act, approved July 8, 1886, entitled "An Act Referring to the Court of Claims the Claims for Property Seized by General Johnson on the Utah Expedition, for Examination and Report," which enacts "that the claims of Joseph C. Irwin and Company, and C. A. Perry and Company, freighters, for property claimed to have been taken and impressed into the service of the United States in the year 1857, by orders of Colonel Albert Sidney Johnston, in command of the Utah expedition, as well as for property alleged to have been sold to the Government, be, and the same are hereby, referred, with all the papers relating thereto, to the court of claims, for adjudication, according to law, on the proofs heretofore presented, and such other proofs as may be adduced, and report the same to Congress."

In pursuance of this Act the parties named therein filed their respective petitions in the court of claims, stating the grounds and particulars of their demands for judgment. Judgments were rendered therein in the ordinary form in the case of J. C. Irwin and Company for the recovery of the sum of $21,600, and in the case of Charles A. Perry and Company for the sum of $44,025. From these judgments the United States prosecutes the present appeals.

The facts in the two cases as found by the court of claims are substantially the same. The firm of J. C. Irwin and Company, at the time of the occurrences hereinafter set forth, were engaged in freighting across the plains by means of wagon trains, and in June, 1857, were under contract to transport from Atchison, Kansas, to Salt Lake City, seventy-five wagon loads of merchandise, and late in the summer of that year started their trains on that journey. Charles A. Perry and Company, in August, 1857, were doing a general merchandise business at Salt Lake City, and in that month started three ox trains, two of twenty wagons each, and one of eighteen wagons, with five wagons drawn by mules, from Fort Leavenworth, Kansas, to Salt Lake City. All the trains of both parties reached Rocky Ridge early in October, 1857, and were progressing successfully on their journey. The animals were in good condition, and making from eighteen to twenty miles per day. At this point they were met by United States troops, under command of Lieutenant-Colonel Smith, who ordered the trains to proceed no further without his permission. Lieutenant-Colonel Smith was under command of Colonel Albert Sidney Johnston. The latter, on joining the command, issued an order addressed to the parties in interest, as follows:

"Headquarters Army of Utah,
"South Pass, October 19, 1857.

"Sir,—The colonel commanding directs me to inform you, in reply to your letter of to-day, that no goods or supplies of any kind will be permitted to pass this Army, for Salt Lake City or other points occupied by the Mormons, so long as they maintain a hostile attitude to the Government of the United States."

On the 24th of October an order was issued, prescribing the order of the march, and designating the position to be maintained on the march and in the camp by the plaintiff's trains. Plaintiff did not seek or desire military protection, and requested Colonel Johnston to be allowed to proceed on their journey, as they were not, in their opinion, in danger from the Mormons. This request was denied. Plaintiffs were required to have their teams yoked and ready by ten in the morning, and they often had to stand for two hours in consequence of delay in the general movement. The teams always got into camp late, and consequently were grazed at great disadvantage. They were also limited to a defined and restricted space [128] assigned them, and were not permitted by the military authorities to go beyond this space. The animals belonging to the army arrived first at camp, and were posted on the best grass. As a necessary result freighters' teams were insufficiently fed. Plaintiffs' animals were often used to aid in hauling the government trains, and thus did extra work on insufficient food. The orders requiring plaintiff's trains to move with the army column necessarily impeded their progress, and held them back until the bad weather set in. For these reasons the plaintiffs' stock became greatly reduced in flesh, and many died from overwork and starvation. Plaintiffs' trains were loaded with goods and merchandise notoriously intended for trade with the Mormon inhabitants of the Territory of Utah, who were then in avowed rebellion and in threatened war with the Government of the United States; but plaintiffs were ignorant of this state of affairs upon starting, and until arrival at Rocky Ridge. It is also found by the court of claims that R. H. and James Porter were also freighters like the plaintiffs, and were detained at the same time under substantially the same circumstances as those already set forth. An Act for their relief, passed February 18, 1887, 24 Stat. at L. 900, appropriated the sum of $10,000, less the sum of $750 theretofore paid them, "in full for all claims for damages or compensation for property impressed by order of Colonel Johnston, in command of the United States troops *en route* for Utah in 1857."

Two questions were presented on the part of the United States on the trial of the cases in the court of claims, and are renewed in argument here. They are: (1) that the Act of Congress of July 8, 1886, referring these claims to the court of claims, does not authorize a final judgment against the United States, but only such

findings as, being reported to Congress, shall serve as the basis, in its discretion, for future legislative action; and (2) that, supposing the judgments of the court of claims, under the Act, to be final, they are erroneous because founded on allowances for consequential damages to the property of the plaintiffs, by reason of detention and delay, not within the limitation prescribed by the Act of Congress, which authorized judgment only for property taken and impressed into the service of the United States. [129]

In support of the first proposition it is argued by the attorney-general that the direction contained in the Act addressed to the court of claims to "report the same to Congress," taken in connection with the title, which describes it as "An Act Referring to the Court of Claims the Claims for Property Seized by General Johnston on the Utah Expedition, for Examination and Report," sufficiently indicates the intention of Congress that the conclusions of the court of claims should not be final, but subject to revision at the discretion of Congress. But, in our opinion, the controlling words of the Act are those which declare that the claims of the parties are thereby referred to the court of claims "for adjudication according to law." The force of this phrase cannot be satisfied by anything less than a formal, regular, and final judgment of the judicial tribunal to which the matter is submitted, acting upon the acknowledged principles of law applicable to the circumstances of the case. All such judgments were required by existing law to be reported to Congress; and the addition of words to the same effect in this statute, while being perhaps unnecessary, does not change the character of the judgments to be reported.

On the second question, however, we are of the opinion that the court of claims has erred. The reference made by the statute is limited by its express language to a judgment "for property claimed to have been taken and impressed into the service of the United States in the year 1857 by orders of Colonel Albert Sidney Johnston, in command of the Utah expedition, as well as for property alleged to have been sold to the Government." Of course, there would be no doubt as to the legality of so much of the claims as arise upon sales, proven to have been made by the plaintiffs to the Government, of their property for its use; but in point of fact no such sales are found to have been made. So far as the judgments embrace allowances for losses consequent upon the refusal of Colonel Johnston to permit the plaintiffs' trains to proceed upon their journey, arising from the mere detention and delay occasioned thereby, they go beyond the intention of the Act of Congress. [130] It was the clear dictate of military duty on the part of Colonel Johnston to prevent information and supplies from going forward to the public enemy. To effect this, he issued his order "that no goods or supplies of any kind will be permitted to pass this army for Salt Lake City, or other points occupied by the Mormons, so long as they maintain a hostile attitude to the Government of the United States." There is nothing in the terms of this order to require the plaintiffs to keep with the troops; they were only forbidden to pass them in advance. They might have remained at Rocky Ridge, or they might have retraced their steps and returned. This perhaps would also have involved loss in breaking up their venture, and perhaps damage to the property constituting the trains; but it would not have been taking and impressing the property into the service of the United States. So far as appears from the finding of facts, it was the choice of the plaintiffs to remain with Colonel Johnston's column and proceed with it. In making this choice they elected to submit to the necessary military orders governing the march and the camp, and to any inconveniences and losses necessarily resulting therefrom. The case in that respect does not differ from what it would be on the supposition of their having been ordered and compelled to remain at Rocky Ridge or to return. Even if it be a just inference of fact that the plaintiffs were under compulsion in keeping with the column of Colonel Johnston, it by no means follows from that alone that their property was taken and impressed into the service of the United States in the sense of the Act of Congress of July 8, 1886. However proper it might have been for the Legislature to have provided indemnity for the losses occurring by reason simply of the detention thus occasioned, we cannot think it was the intention of the Act to go beyond payment for property actually used and employed by the Government in its service. To require the plaintiffs' trains to remain with the military force, in order to ensure the success of the expedition by preventing the enemy from obtaining information and supplies, cannot be construed as a seizure and impressment of their property into the public service.

In opposition to this conclusion we are referred to the opinion of Mr. Bates while attorney general (10 Ops. Atty-Gen. 21), upon the case of the Porters, mentioned in the statement of facts found by the court of claims. It seems their claim was embraced, with those of the plaintiffs in these cases, in the original draft of the Act of July 8, 1886, as it passed the Senate, but, before final passage, was struck out because their claim was pending before the Treasury Department. The accounting officers of the treasury allowed their claim, presumably upon the strength of the opinion of the attorney-general, who held that they were entitled to an allowance and payment under the provisions of the Act of March 3, 1849, providing for the payment for horses and other property lost or destroyed in the military service of the United States. The attorney-general, it is true, expressed the opinion that the order of Colonel Johnston reduced the train of the claimants to military control, and thereby subjected it to the losses proved, for the purpose of depriving the Mormons of any benefit from it, and was therefore an impressment into the military service within the meaning of the Act of March 3, 1849. But it is evident that he did not rest his recommendation for the payment of the claimants on that consideration, for the opinion proceeds as follows: "But whatever may have been the legal result of the order of General Johnston, the fact is well proved that the property of the claimants was afterwards actually reduced to military service. The loss of the army cattle compelled a resort to those of the trains, and several witnesses, servants of the Government and of the claimants, state that the cattle of Messrs. [131]

Porter were used indiscriminately with the army cattle to haul the army wagons. In this service many of them died and many were abandoned, exhausted from overwork and want of forage; many were killed and eaten by the army, and for these I understand the claimants have been already paid under this law. I am unable to see any distinction between the cattle that were eaten and those that were worked in the army trains and lost, for both were certainly impressed within the meaning of the [132] statute. Nor do I see how any distinction can be made between the cattle that actually died when in the army trains and those that may have been lost between South Pass and Fort Scott; for, when they had been once used with the army cattle to haul the trains, they were actually employed in the service of the United States, being under military control and liable to be applied to that work when needed. It is too rigid a construction to say that 'actual service' means only the time employed in labor. Possession and the power to use the animal, *Judge* Black says in *Oldham's Case* (Man's Op. No. 59), is the test of employment within the meaning of the statute, and these General Johnston undoubtedly had."

The amount found due to the Porters by the accounting officers of the treasury was appropriated by Congress by the Act of February 7, 1887, heretofore referred to. The facts relied upon by the attorney-general, as justifying the payment in their case, of actual service in the employment of the United States, do not appear in the present cases.

Neither does the conclusion of the court of claims derive support from anything said or decided by this court in the case of *Mitchell v. Harmony*, 54 U. S. 13 How. 115 [14: 75]. There the plaintiff was forced, against his will, to accompany the American troops with his wagons, mules, and goods in a hazardous expedition, and for the purpose of strengthening their military force. His wagons and mules were used in the public service in the battle of Sacramento, and on the march afterwards; when the place was evacuated they were left behind unavoidably, as nearly all of his mules had been lost in the march and battle; and when the Mexican authorities regained possession of the place, his goods were seized and confiscated and totally lost to him. The jury found, from the evidence, that there was an actual seizure of the plaintiff's property by the officer; and, in speaking to that point, the court says, p. 136 [84]: "We do not see any evidence in the record from which the jury could have found otherwise. From the moment they were taken possession of at San Elisario, they were under the control of Colonel Doniphan, and held subject to his order. They were no longer in the possession or control of the plain- [133] tiff, and the loss which happened was the immediate and necessary consequence of the coercion which compelled him to accompany the troops. It is true the plaintiff remained with his goods, and took care of them so far as he could during the march, but whatever he did in that respect was by the orders or permission of the military authorities. He had no independent control over them."

As it appears from the findings of the court of claims that "plaintiffs' animals were often used to aid in hauling government trains, and thus did extra work on insufficient food," there is perhaps ground for a recovery to some extent, under the terms of the Act, for property taken and impressed into the service of the United States; but we are unable, from the findings, to determine the amount properly allowable on that account. It becomes necessary, therefore, to reverse the judgments in both cases, and remand them to the court of claims for more definite and specific findings; and inasmuch as we have determined that the facts as found by the court of claims in the present record do not enable us to determine what property of the plaintiffs was taken and impressed into the service of the United States by Colonel Johnston, the cases may be opened for further proofs on that point.

The judgments are therefore reversed, and the causes remanded to the Court of Claims for further proceedings in accordance with this opinion; and it is so ordered.

ATTERSON W. RUCKER, *Plff. in Err.*, [85]
v.
JEROME B. WHEELER.

(See S. C. Reporter's ed. 85-96).

Charge to jury—expression of opinion.

1. A judge of a court of the United States, in submitting a case to the jury, may, in his discretion, express his opinion upon the facts; and when no rule of law is incorrectly stated, and all matters of fact are ultimately submitted to the determination of the jury, such expression of opinion is not reviewable on writ of error.

2. *Held*, also, in this case, that the judge's charge to the jury fairly submitted to the jury the question as to the existence of the agreement upon which the plaintiff relied; and that there was no error in the charge.

[No. 1306.]

Submitted Jan. 9, 1888. Decided April 16, 1888.

IN ERROR to the Circuit Court of the United States for the District of Colorado, to review a judgment in favor of defendant in a suit to recover for the services of plaintiff. *Affirmed.*

Statement by *Mr. Justice* **Harlan:**

The cause of action set out in the first count of the complaint is that the defendant in error, who was the defendant below, agreed with the plaintiff in error that if the latter assisted the former and his agents in purchasing the interest of Julia Webber in the Emma lode mining claim at a price not exceeding $40,000, he should receive for his services the sum of $10,000, but only $5,000 if the defendant was compelled to pay more than $40,000 for said interest. The complaint alleges that, in consequence of services rendered by the plaintiff under that agreement, the defendant was, on the 22d of November, 1884, enabled to buy said interest at a sum exceeding $40,000, whereby the latter became indebted to plaintiff in the sum of $5,000.

The defendant in his answer denies that he made any such agreement as that alleged, or that he was enabled to purchase the interest of Julia Webber by reason of any services rendered by the plaintiff.

The second count of the complaint sets forth the following cause of action:

[86] On the 29th of November, 1882, one Henry Webber was the owner of an undivided $\frac{20}{80}$ of the Emma lode mining claim in Colorado; one Archie C. Fisk being the owner of $\frac{28}{80}$, and Charles F. Abbey the owner of the remaining $\frac{12}{80}$. In 1883 Fisk commenced proceedings under the statutes of the United States in advertising the interest of Webber "out of said claim" on account of alleged nonpayment of assessment work done by Fisk on said claim in 1882. After the period of the publication of said advertisement, Fisk asserted ownership of $\frac{48}{80}$ of said mining claim.

On the 20th of November, 1883, Fisk leased to Abbey said $\frac{48}{80}$. Webber, desiring to secure possession of said claim, procured from Abbey, November 26, 1883, a lease in the name of Nevitt, his brother-in-law, of an undivided $\frac{12}{80}$, the latter being the nominal and Webber the real owner of the lease. On the 18th of April, 1884, the defendant, Wheeler, by conveyances, had become the owner of all the interest claimed by Fisk. During the same month Webber commenced suit against the grantor of Wheeler, and the administrator and heirs at law of Abbey, to recover his interest of $\frac{20}{80}$ in said premises.

On the 28th of April, 1884, Webber gave to the plaintiff, Rucker, a quitclaim deed in and to an undivided one-twelfth interest ($\frac{5}{80}$) in said mining claim, as his compensation for legal services rendered and to be rendered in the prosecution of said action. In the same year Wheeler and the administrator and heirs at law of Abbey commenced an action against Nevitt for the possession of said premises, and to restrain him and his agents from working and mining the same.

At the time the quitclaim deed was made to Rucker it was agreed between him and Webber that Rucker's interest would not be subject to the burden of the lease made by Abbey to Nevitt. In consideration of that deed and agreement the plaintiff entered upon the performance of the legal services necessary to establish Webber's title to said interest of $\frac{20}{80}$.

On the 26th of September, 1884—the defendant being then the owner of both the Abbey and Fisk interests in said claim—the plaintiff, for and on behalf of Webber, and acting nom-
[87] inally for Webber, together with the defendant's attorney, prepared a written agreement, which was signed and executed by Webber, Nevitt, and the defendant. It had for its object the compromise of the pending litigation between the parties. That agreement was as follows:

"This agreement, made and entered into on this 26th day of September, A. D. 1884, by and between J. B. Wheeler of the first part, and C. E. Nevitt of the second part, and Henry Webber:

"*Witnesseth*, That whereas the said party of the first part is the owner of certain interests in the Emma mine, situate in Pitkin County, State of Colorado, and a suit is now pending in the district court of said county on behalf of said Webber against said party of the first part and others for a one-third ($\frac{1}{3}$) interest in said mine; and whereas another suit is pending in said court in behalf of the said J. B. Wheeler and others, against the said second party, to recover possession of said mine, and the said second party in his defense thereto claims to hold a lease of said mine expiring on the 20th day of November, 1884, in which said suit the district judge of said court has made an order allowing the possession of said property to remain in the hands of said second party during the period of said lease; two thirds ($\frac{2}{3}$) of the proceeds thereof to be paid to John Hulbert, receiver, to be held by him to await the determination of said suit or the further order of the court, less a royalty of fifteen (15) per cent; and whereas said party of the second part has been for some time in the possession of said mine, and has extracted a large quantity of ore, a greater portion of which is now on hand undisposed of; and whereas, said second party being desirous of compromising and settling said actions,—it is agreed, in consideration of the premises, the said first party will, upon the ensealing of these presents, make, execute, and deliver a sufficient deed of quitclaim to said Webber, his grantees or assigns, for an undivided one-fourth ($\frac{1}{4}$) interest in said mine; and said Webber, on receipt of said deed, agrees to release, waive, and does hereby release and waive, unto said party of the first part, all claims which he may have to any further or other interest in said property.

"And the suit aforesaid between the said [88]
parties to be dismissed upon each party paying their own costs therein. That the suit aforesaid between said first party and said second party shall likewise be dismissed upon the same terms, and the said second party hereby releases and waives to said first party all right and title as to said lease, save and except a one-third ($\frac{1}{3}$) interest therein, and at the end of said term to release and surrender the whole thereof, and possession thereunder, peaceably to said owners, their grantees or assigns.

"It is further agreed that the proceeds of the ore now on hand, after payment of the cost of production and after the payment of the costs of hauling and treatment, shall be divided as follows: The said party of the second part to receive one third ($\frac{1}{3}$) thereof, less a royalty of fifteen per cent on said one-third interest, according to the terms set forth in his said lease; and the said party of the first part to receive three fourths ($\frac{3}{4}$) of the remaining two thirds ($\frac{2}{3}$); and the said Webber, his grantees or assigns, one fourth ($\frac{1}{4}$) of the said remaining two thirds ($\frac{2}{3}$); and during the remainder of the term of said lease, namely, up to and inclusive of the 20th day of November, A. D. 1884, the proceeds of the mine to be divided in the same manner and in the same proportions aforesaid; such division also to apply to and include the said royalty to be paid by the second party as aforesaid.

"And it is mutually agreed by and between the parties hereto that during the remainder of the term of said lease the said mine shall be under the superintendence of Joseph Ruse, who shall operate, work, and develop the said property for the mutual interest of all the parties hereto, and with a view to developing and preserving the said property as a workable mine, as well as the production of ore therefrom; said work to be done by said Joseph Ruse in as economical a manner as possible, and to limit the production therefrom so as to

correspond to the expense incident to mining, and the price for which said ore can be sold, and any failure upon the part of said Joseph Ruse to comply with the conditions herein mentioned shall be the cause for the removal from such position of superintendent.

"The said Joseph Ruse, during his continuance as superintendent, shall be under the advisory control of said first party. And the said second party and the said Webber shall have the right at all times to make suggestions in the matter of the authority of the said party of the first part respecting the management of the said mine. [89]

"In witness whereof we hereto set our hands and seals on the day and year first herein above written.

"J. B. Wheeler. [seal.]
"C. E. Nevitt. [seal.]
"Henry Webber. [seal.]"

At the time this agreement was executed, the defendant, the complaint alleges, "knew that said Nevitt was representing the said Webber, and that said lease was in fact owned by the said Webber, and that plaintiff was entitled to $\frac{5}{60}$ of the proceeds of said mine out of the $\frac{10}{60}$ thereof awarded to said Webber under and in virtue of said agreement; that in pursuance of said agreement the management and control of the working of said mine was given over to the said defendant, who recovered the proceeds thereof, and placed the same in his banking house to the credit of the mine."

On the 21st of October, 1884, the defendant purchased said leasehold interest from Nevitt, who was acting for Webber as aforesaid, and took an assignment thereof to himself; that by virtue of said purchase he became entitled to $\frac{10}{60}$ more of the ore then on hand, and $\frac{10}{60}$ of that produced thereafter and until November 21, 1884.

On the 17th of November, 1884, Henry Webber sold his interest, $\frac{10}{60}$, to his wife, who, November 22, 1884, sold and conveyed to the defendant. Up to the time of Mrs. Webber's sale to the defendant a large sum of money was realized from the sale of the ore, and there was on hand, unsold, a large quantity taken from the mine subsequent to September 26, 1884, the money thus realized being in defendant's bank to the credit of the mine. The plaintiff claims that at the time the defendant purchased said leasehold interest there was due to him, on account of his $\frac{5}{60}$ out of the $\frac{10}{60}$ of the proceeds of the mine accorded to Webber and his grantees and assigns by the agreement of September 26, a balance of $2,262.30; that on the same basis there was due him $2,630.66 at the time of defendant's purchase of Mrs. Webber's interest; which sums the defendant placed to his own account and converted to his own use. [90]

The complaint further alleges:

"That, at the time of the purchase of said leasehold interest, and at the time of the purchase of said Julia Webber's title by the defendant, the said defendant well knew that the plaintiff and the said Henry Webber had agreed, at the time of the plaintiff obtaining his title aforesaid, that plaintiff's interest was not subject to the burden of said lease, and that he the said plaintiff was to receive out of the interest of the said Webber, as the grantee of said Webber, his full one-twelfth share and interest in the ore produced and to be produced from said mine, and he well knew that by virtue of the terms of said agreement of the 26th day of September, 1884, plaintiff was entitled to his five sixtieths of the proceeds of all ores extracted from said mine out of the ten sixtieths aforesaid accorded to the said Webber by virtue of said agreement.

"That by virtue of the sale made by said Henry Webber to the said Julia Webber no part of the proceeds of said mine theretofore produced were sold to said Julia Webber; and that when said Julia Webber received said conveyance she also knew that plaintiff's five sixtieths interest in the proceeds of the ore theretofore extracted from said mine was to come out of the ten sixtieths thereof accorded to said Henry Webber under and by virtue of said agreement on the 26th of September, 1884; and that she also knew and understood that, by virtue of said agreement made between the plaintiff and said Henry Webber at the time of his conveyance to said plaintiff, that his, said plaintiff's, interest was not subject to the burden of said leasehold interest, and that said leasehold interest was owned and controlled by said Henry Webber."

Such is the case made by the complaint.

The defendant in his answer admits many of the allegations of the complaint, but denies that at the time of the making of the deed to him by Webber, or at any other time, it was agreed between them that the plaintiff's interest would not be subject to the burden of the lease made by Abbey to Nevitt, or that he, defendant, knew, either at the time of the signing and execution of the agreement of September, 26, 1884, or at any other time, that Nevitt was representing Webber, or that said lease was owned by Webber, or that the plaintiff was entitled to $\frac{5}{60}$ of the proceeds of the mine out of the $\frac{10}{60}$ awarded to Webber under said agreement. [91]

He admits that, up to the time of the sale to him by Julia Webber of the interest previously held by her husband, "there had been a large sum of money realized from the sale of ore taken from the said mine, together with a large amount unsold," and that "the moneys belonging to said interests were by him purchased with the said interests, and that he consequently realized the amount thereof." But he denies that any part or portion of the said proceeds of ores belonging to plaintiff were ever withheld from him. He denies that at the time of his purchase from Julia Webber that he ever knew, or that Henry Webber and plaintiff ever agreed, at the time the latter got his title, "that plaintiff's interest was not subject to the burden of said lease, or that plaintiff was to receive out of the interest of said Webber, as the grantee of said Webber, his full $\frac{1}{12}$ share or interest of the ore produced or to be produced from said mine. He denies that "he well knew, or knew at all, either by virtue of the terms of said agreement of the 26th of September, 1884, or at any other time, that the plaintiff was entitled to $\frac{5}{60}$ or any other amount of the proceeds of ores extracted from said mine, out of the $\frac{10}{60}$ accorded to said Webber by virtue of said agreement, or any other sum; but, on the contrary, alleges that the said

plaintiff was to receive his proportion, to wit, $\frac{1}{40}$. of the proceeds of all of said ores, less the proportion which the $\frac{1}{40}$ interest should bear of the burden of the said lease upon the said $\frac{1}{4}$ interest in said mine." He denies that Julia Webber knew or understood that by virtue of the agreement of September 26, 1884, or of any agreement, the plaintiff's interest was not subject to the burden of the said leasehold interest, or that said interest was owned or controlled by said Henry Webber.

Mr. **Atterson W. Rucker** *in pro. per.*, for plaintiff in error:

The deed under which plaintiff claims is much more than a mere quitclaim deed.

Sibley v. *Bullis*, 40 Iowa, 429; *Wilson* v. *Irish*, 62 Iowa, 260; *Cutler* v. *James*, 64 Wis. 173; *S. C.* 54 Am. Rep. 608; *Touchard* v. *Crow*, 20 Cal. 150.

It contains words of present grant.

Chapman v. *Glassell*, 13 Ala. 50; *S. C.* 48 Am. Dec. 41 and note.

Such a deed passes the fee.

Brown v. *Banner Coal & Oil Co.* 97 Ill. 214; *S. C.* 37 Am. Rep. 105; *Green Bay & M. Canal Co.* v. *Hewett*, 55 Wis. 96; *S. C.* 42 Am. Rep. 701; *Fox* v. *Hall*, 74 Mo. 315; *S. C.* 41 Am. Rep. 316; *Holland* v. *Rogers*, 38 Ark. 251; *Hanks* v. *Folsom*, 11 Lea, 555; *Tremmel* v. *Kleiboldt*, 6 Mo. App. 549; *Platt* v. *Brown*, 30 Conn. 336; *Kerr* v. *Freeman*, 33 Miss. 292.

Under our legislation a mere quitclaim deed conveys all the interest, legal or equitable, held by the grantor.

Bradbury v. *Davis*, 5 Col. 265.

At the time of executing the deed, the grantor had an equitable title, which was confirmed by the subsequent deed of defendant.

Irvine v. *Irvine*, 76 U. S. 9 Wall. 617 (19: 800); *Frost* v. *M. E. Missionary Society*, 56 Mich. 62; *Welch* v. *Dutton*, 79 Ill. 465; *Touchard* v. *Crow*, 20 Cal. 150; *Farmers Loan & Trust Co.* v. *McKinney*, 6 McLean, 1.

Title derived from such subsequent deed would pass, by relation, as of the date of the deed to plaintiff.

Landes v. *Brant*, 51 U. S. 10 How. 370 (13: 459); *Welch* v. *Dutton*, 79 Ill. 465; *French* v. *Spencer*, 62 U. S. 21 How. 228 (16: 97).

A deed is to be construed most strongly against the grantor.

Grubb v. *Grubb*, 101 Pa. 11; *Monmouth* v. *Plimpton*, 77 Me. 556; *Zittle* v. *Weller*, 68 Md. 190.

If two causes of action are improperly blended in one count, the objection, not having been taken by a motion to require the plaintiff to elect upon which he would proceed, is waived.

Otis v. *Mechanics Bank*, 35 Mo. 128; *Bass* v. *Comstock*, 36 How. Pr. 382; *S. C.* 38 N. Y. 21.

Messrs. **T. M. Patterson** and **C. S. Thomas**, for defendant in error:

One who takes simply by a quitclaim deed is not a *bona fide* purchaser without notice.

Hastings v. *Nissen*, 31 Fed. Rep. 600; *Oliver* v. *Piatt*, 44 U. S. 3 How. 410 (11: 657); *May* v. *Le Claire*, 78 U. S. 11 Wall. 232 (20: 53); *Villa* v. *Rodriguez*, 79 U. S. 12 Wall. 338 (20: 410); *Dickerson* v. *Colgrove*, 100 U. S. 578 (25: 618).

We concede that a quitclaim deed is as effectual to pass the title to real estate as any other, if accepted without notice of prior rights.

Bradbury v. *Davis*, 5 Col. 269; *McConnel* v. *Reed*, 5 Ill. 117; *Morgan* v. *Clayton*, 61 Ill. 35.

Plaintiff should obtain no advantage which his client could not share.

Heffren v. *Jayne*, 33 Ind. 463; *McCormick* v. *Malin*, 5 Blackf. 509; *Kisling* v. *Shaw*, 33 Cal. 425; *Ford* v. *Harrington*, 16 N. Y. 288.

The grantee of real estate takes title, subject only to such incumbrances or equities as appear of record, to claims of persons in possession, and to such equities of which he, at or before his purchase, had actual notice.

Ridgeway Stove Co. v. *Way*, 2 New Eng. Rep. 363, 141 Mass. 557; *Whitfield* v. *Riddle*, 78 Ala. 99; *Jones* v. *Hudson*, 28 S. C. 494; *Edgell* v. *Hagens*, 53 Iowa, 223; *Word* v. *Box*, 66 Tex. 596; *Rubelman* v. *Rummel*, 72 Iowa, 40; *Fargason* v. *Edrington*, 4 S. W. Rep. 763.

Mr. Justice **Harlan** delivered the opinion of the court: [92]

1. We perceive no error in the court's charge to the jury upon the cause of action set out in the first count of the complaint, namely, as to whether any such agreement as that alleged was ever made between the plaintiff and the defendant.

The court properly said:

"On the cause of action as stated here, in order to show any right upon the part of the plaintiff to commission, for which he sues, in making the sale, the proof must be of a sale made to the defendant, or an agreement for a sale to be made to the defendant,—not a sale to Judkins and Devereux, not a sale to Judkins and the defendant, because that is a very different matter from a sale to the defendant alone. If Judkins was to be interested in the purchase, he would also join in the payment of the commission; that is to say, Judkins and Devereux, if they purchased,—Devereux acting on his own behalf,—Judkins and the defendant, if they purchased jointly, would pay it. If some other man was brought into the purchase, —some one not named at that time or referred to in any way,—then it would be that other man and Judkins who would pay the plaintiff the commission; furthermore, it does not appear—in fact the evidence tends to prove that Devereux had no authority from Wheeler at that time to make any purchase of this property or any other; and, of course, an agreement by Devereux on behalf of the defendant to purchase this property would not be binding on the defendant unless afterwards, with full knowledge of the situation and circumstances, and of what had been done by Devereux in his behalf, he should ratify and confirm [93] what had been done by Devereux. I do not see that this evidence proves, taking all that is said about it by these witnesses, a contract on behalf of the defendant to purchase this property through the plaintiff. I say now, generally, upon this branch of the case that it must appear to you, from the evidence, that there is an agreement between the plaintiff and defendant, Mr. Rucker and Mr. Wheeler, to the effect that Mr. Rucker was to secure this property for him, and that he was to pay him for that service. The agreement which appears to be stated by Judkins and by Devereux is not of this character; that is, that was an agreement that Judkins would purchase with somebody else, and of course Judkins would be chargeable with the commission if it was carried out."

It is insisted by the plaintiff that the court went too far in its expressions of opinion upon the evidence bearing upon this issue, and that what was said had practically the effect of taking the case from the jury. It is no longer an open question that a judge of a court of the United States, in submitting a case to the jury, may, in his discretion, express his opinion upon the facts; and that, "when no rule of law is incorrectly stated, and all matters of fact are ultimately submitted to the determination of the jury," such expression of opinion is not reviewable on writ of error. *Vicksburg & M. R. Co.* v. *Putnam*, 118 U. S. 545, 553 [30: 257, 258]; *St. Louis, I. M. & S. R. Co.* v. *Vickers*, 122 U. S. 360 [30:1161]; *U. S.* v. *Philadelphia & R. R. Co.* 123 U. S. 114 [31: 138]. Whether the parties made such an agreement for compensation to the plaintiff as that alleged was the only issue made by the first count of the complaint; and that was a question of fact to be determined by the jury. Their right to determine it was distinctly recognized in that part of the charge which immediately followed the court's expression of opinion as to certain portions of the evidence, namely: "If you can find anything in the evidence to support the conclusion that the defendant made an agreement with plaintiff to pay this commission, and that the property was afterwards purchased by him in pursuance of that agreement, then the plaintiff is entitled to recover; otherwise he is not entitled to recover." Indeed, we are not sure but that the court might [94] properly have given a peremptory instruction in favor of the defendant upon this branch of the case.

2. In reference to the cause of action set out in the second count of the complaint, it is manifest that the plaintiff bases his right to recover upon the agreement alleged to have been made between him and Henry Webber, at the time the latter executed the quitclaim deed of April 28, 1884, to the effect that plaintiff's interest would not be subject to the burden of the lease made by Abbey to Nevitt; of which agreement, it is further alleged, Julia Webber had knowledge when she purchased from her husband, and defendant had knowledge at the time he purchased from her.

Upon this part of the case the court said to the jury:

"Now, the position of the plaintiff is that he comes in under the designation of a grantee or assignee of Webber for one half of the amount reserved to Webber by this agreement —that is, $\frac{5}{60}$ths; this agreement reserves to Webber $\frac{10}{60}$ths; and the position of the plaintiff is that he must be regarded as an assignee and grantee of Webber, in virtue of his deed of the preceding April for half of that amount which was reserved to Webber. He has brought this suit to recover that. Now, as I said before, in the deed there is nothing about that, and the question is, What was the intention of the parties at the time this deed was made? The plaintiff testifies that it was his intention that he should have the interest accruing under this lease as it went along, and was not to be postponed to the lease. I understand Mr. Webber to deny that proposition. Some comments have occurred between counsel as to the meaning of Mr. Webber's testimony,—whether he has denied it or not. Mr. Webber could, if he chose to, by the terms of the agreement, reserve this entire interest to himself—that is, all that was accruing under the lease—if it was his intention to keep it to himself, and there was no agreement of the parties in respect to it; the deed constitutes no agreement. He could reserve it to himself, and if he did reserve it to himself, if nothing was said about it at that time, in the absence of any agreement between them that it should go to the plaintiff, then it would go to Webber; and [95] under these circumstances it remained in him up to the time that he made the sale to the defendant in this case. After the agreement of September 26, and some time in October, Nevitt sold, as you remember, through the negotiations of Mr. Judkins, to Mr. Devereux or to the defendant directly,—I don't remember much about that transaction,—and subsequently Mrs. Webber, in a conveyance which she made to the defendant, assumed to convey all right and interest accruing to her under the lease. Upon that point the question is whether there was any agreement between the parties that the plaintiff's right and interest under this deed should become effectual at once upon the execution of the deed, and that he should be entitled to whatever should come under the lease to Webber—that is, to his part of it, $\frac{1}{12}$th, $\frac{5}{60}$ths, of the whole amount—and if Nevitt was taking the whole proceeds of the mine, and I believe he was—at least it seems that he did so, or assumed the right to do so, after the mine became fruitful, and that was only in August, I think, of the same year—there were no proceeds of the mine, nothing that could be divided amongst them—among the several parties—until that time, and nothing was in fact divided until after this agreement of the 26th of September was made. So that the question must be whether there was an agreement between the plaintiff and defendant, or between the plaintiff and Webber, that he should be entitled to these proceeds from the time of the conveyance to him; that is a question of fact for your consideration. If you find that there was such an agreement; that the parties understood and intended that Mr. Rucker should be entitled to whatever should arise under the lease according to the proportion and interest conveyed to him by this deed, from and after the time of the deed until the end of the lease,—then my understanding is that he is entitled to recover the sum specified in this stipulation between the parties. They have agreed upon the amount. In the absence of such an agreement, then he is not entitled to recover."

There was no error in this charge. It contained all that need have been said. It fairly submitted to the jury the question as to the existence or nonexistence of the agreement upon which the plaintiff relied. That the [96] plaintiff did rely upon that agreement is perfectly clear, not only from the complaint, but from his second request for instructions, as follows: "2. The court is asked to instruct the jury that if they believe, from the evidence, that the lease of a portion of the lode, though made nominally to Nevitt, was in fact owned by Mr. Henry Webber, and that the same Webber sold and conveyed a one-twelfth interest to the plaintiff after the making and delivery of the

lease; and if they also believe, from the evidence, that at the time of the execution of the deed from Webber to plaintiff it was mutually agreed between Webber and plaintiff that this one twelfth should be exempt from the operation of said lease,—then plaintiff is entitled to the proceeds of the one twelfth, and upon these facts they should find for the plaintiff to the amount fixed by the stipulation of the parties read to the jury, and interest at the rate of ten per cent per year from August 24, 1885, the date the suit was brought.

The jury having found, under appropriate instructions as to the legal rights of the parties, that there was no such agreement, and the parties having stipulated that nothing was due to the plaintiff if the interest he acquired from Henry Webber was subject to the burden of the Nevitt lease, the judgment is *affirmed.*

---

[205] MISSOURI PACIFIC RAILWAY COMPANY, *Plff. in Err.*,

v.

PATRICK MACKEY.

(See S. C. Reporters' ed. 205-212.)

Kansas law—liabilities of railroad companies to employees—14th Constitutional Amendment.

1. The law of Kansas making a railroad company liable to an employé for the negligence or mismanagement of other employés or agents of the same company is not in conflict with the Fourteenth Amendment to the Constitution of the United States, in that it deprives the company of its property without due process of law and denies to it the equal protection of the laws.

2. Legislation which is special in its character is not obnoxious to the last clause of the Fourteenth Amendment, if all persons subject to it are treated alike, under similar circumstances and conditions, in respect both of the privileges conferred and the liabilities imposed.

3. Corporations are persons within the meaning of the amendment.

[No. 218.]

Argued April 13, 1888. Decided April 23, 1888.

IN ERROR to the Supreme Court of the State of Kansas, to review a judgment for damages to an employee of a railroad company by the negligence of a co-employee of the same company. *Affirmed.*

The facts are stated in the opinion.

Messrs. **John F. Dillon** and *Winslow S. Pierce, Jr.*, for plaintiff in error:

The Statute of 1874 operates to deprive railroad companies of property without due process of law, and is legislation of an unequal, partial and discriminating character.

Dow v. *Kansas Pac. R. Co.* 8 Kan. 642; *Union Pac. R. Co.* v. *Milliken*, Id. 647.

The statute creates a new liability. No such liability is imposed by the State upon any person, individual or corporation, other than railway companies. No such liability exists at common law.

R. R. Tax Cases, 13 Fed. Rep. 733; *Re Ah Fong*, 3 Sawy. 144, 157.

Corporations are persons within the meaning of such constitutional provisions.

Santa Clara County v. *Southern Pac. R. R. Co.* 118 U. S. 396 (30:118); *Bank of U. S.* v. *Deveaux*, 9 U. S. 5 Cranch, 86 (3:44); *Marshall* v. *Baltimore & O. R. R. Co.* 57 U. S. 16 How. 326 (14:958); *Northwestern Fertilizing Co.* v. *Hyde Park*, 3 Biss. 481; *Richmond F. & P. R. R. Co.* v. *Richmond*, 96 U. S. 529 (24:737).

The constitutional inhibition includes legislative discrimination against classes as well as against races and individuals.

Civil Rights Cases, 109 U. S. 3 (27:835); *Missouri* v. *Lewis*, 101 U. S. 221 (25:989); Cooley, Const. Lim. 4th ed. 449; *Missouri Pac. R. Co.* v. *Humes*, 115 U. S. 512 (29: 463); *Barbier* v. *Connolly*, 113 U. S. 27 (28: 923); *Soon Hing* v. *Crowley*, Id. 703 (28:1145).

The statute of 1874 cannot be sustained as an exercise of the police power.

Missouri Pac. R. Co. v. *Haley*, 25 Kan. 35; *Toledo, W. & W. R. Co.* v. *Jacksonville*, 67 Ill. 40; *People* v. *Jackson & M. Plank Road Co.* 9 Mich. 307.

What are reasonable police regulations are purely judicial questions.

1 Rorer, R. R. 563; *Chicago & A. R. R. C.* v. *People*, 67 Ill. 11; *Phila. W. & B. R. R. Co.* v. *Bowers*, 4 Houst. 506; *Sloan* v. *Pacific R. Co.* 61 Mo. 24; *Ladd* v. *Southern Cotton Press & M. Co.* 53 Tex. 172.

The police regulations of corporations must be confined to the enforcement of the maxim, *sic utere tuo ut alienum non lædas.*

Tiedeman, Lim. Police Powers, 584; Cooley, Const. Lim. 715 and note, 719, 724, 725; *Thorpe* v. *Rutland & B. R. R. Co.* 27 Vt. 149; 3 Wood, R. Laws, 1703; Pierce, R. R. 465; *Munn* v. *Illinois*, 94 U. S. 124, 125 (24:84); *Ohio & M. R. Co.* v. *Lackey*, 78 Ill. 55; *Zeigler* v. *South & North Ala. R. R. Co.* 58 Ala. 594; *Memphis & C. R. R. Co.* v. *Lyon*, 62 Ala. 71; *Union Pac. R. Co.* v. *Harris*, 33 Kan. 416; *Deppe* v. *Chicago, R. I. & P. R. R. Co.* 36 Iowa, 55.

The constitutional validity of a law is to be tested, not by what has been done under it, but what may, by its authority, be done.

Stuart v. *Palmer*, 74 N. Y. 188.

The Act is unconstitutional because it denies the equal protection of the laws, as between companies and individuals operating railroads.

Louisville & N. R. Co. v. *Tennessee R. R. Commission*, 19 Fed. Rep. 679; *Missouri* v. *Lewis*, 101 U. S. 31 (25:992).

Messrs. **Thomas P. Fenlon** and *John C. Tomlinson*, for defendant in error:

The statute of Iowa is almost identical in terms with the Kansas Statute, and it is held by the Supreme Court of that State not to be in conflict with the Fourteenth Amendment to the Federal Constitution.

McAunich v. *Mississippi & M. R. R. Co.* 20 Iowa, 338; *Bucklew* v. *Central Iowa R. Co.* 64 Iowa, 603.

The constitutionality of a statute of Missouri was decided in *Missouri Pac. R. Co.* v. *Humes*, 115 U. S. 512 (29:463); *Barbier* v. *Connolly*, 113 U. S. 27 (28:923); *Soon Hing* v. *Crowley*, Id. 703 (28:1145); *Atchison, T. & S. F. R. R. Co.* v. *Koehler*, 37 Kan. 463; *Missouri Pac. R. Co.* v. *Haley*, 25 Kan. 35; *Missouri Pac. R. Co.* v. *Mackey*, 33 Kan. 298.

The constitutionality of an Act of Pennsylvania was decided in *Kirby* v. *Pennsylvania R. R. Co.* 76 Pa. 506; *Boston, C. & M. R. R. Co.* v. *State*, 32 N. H. 215.

As to the contention of the counsel for

plaintiff in error that the Act of 1874 of Kansas prohibits railroad companies from setting up as a defense contributory negligence on the part of the injured employé, see *Quackenbush* v. *Wisconsin & M. R. R. Co.* 62 Wis. 411; *Southwestern R. R. Co.* v. *Paulk*, 24 Ga. 356; *Coosa River Steamboat Co.* v. *Barclay*, 30 Ala. 120; *Thorpe* v. *Rutland & B. R. R. Co.* 27 Vt. 140; *State Board of Assessors* v. *Central R. R. Co.* 4 Cent. Rep. 426, 48 N. J. L. 146; *Veazie* v. *Mayo*, 49 Me. 156; *State* v. *Wabash, St. L. & P. R. Co.* 83 Mo. 144; *Ohio & M. R. R. Co.* v. *McClelland*, 25 Ill. 140; *Davis* v. *State*, 3 Lea, 376; *Commonwealth* v. *Eastern R. R. Co.* 103 Mass. 254; *New Albany & S. R. R. Co.* v. *Tilton*, 12 Ind. 3; Cooley, Const. Lim. 5th ed. 482, § 390, p. 717, § 581.

This law denies to no person affected by it "equal protection of the laws."

Owensboro & N. R. Co. v. *Daviess County*, 3 S. W. Rep. 364; *Ohio & M. R. R.* v. *McClelland*, 25 Ill. 140.

[206] *Mr. Justice* **Field** delivered the opinion of the court:

In 1882, the defendant below, the Missouri Pacific Railway Company, a corporation created under the laws of Kansas, operated lines of railway in the latter State. It also had control of two track yards adjacent to the City of Atchison, designated respectively as the upper and lower yard, and it used two switch engines in moving cars from one yard to the other. On the 11th of February of that year the plaintiff was in the service of the Company as a fireman on one of these engines employed in transferring cars from one point to another in the upper yard, when it was run into by the other engine, owing to the negligence of the engineer of the latter. By the collision the right foot and leg of the plaintiff were so crushed as to necessitate amputation. For the damages thus sustained the present action was brought in a district court of the State. On the trial the defendant requested the court to instruct the jury, that if they found from the evidence that the plaintiff was injured through the carelessness of a fellow servant, he could not recover; which instruction was refused, and the defendant excepted. The court charged the jury as follows:

"At the common law a master or employé could not be held liable for an injury sustained by one servant by reason of the mere negligence of a fellow servant engaged in the same common employment, the negligence of the fellow servant not being deemed in such case the negligence of the master; and such was the law of this State up to 1874, but at that time this rule of the common law was abrogated, so far as it related to railroad companies and their employés in this State, by a statute which reads as follows:

"'Every railroad company organized or doing business in this State shall be liable for all damages done to any employé of such company in consequence of any negligence of its agents, or by any mismanagement of its engineers or other employés, to any person sustaining such damage.'

[207] "This enactment so far modifies and changes the common law that a servant or employé of a railroad company may maintain an action against such railroad company for an injury received, while in the line of his employment, through the negligence of a fellow servant or employé engaged with him in the same common work of the master or employer, unless such injured servant or employé has himself been guilty of negligence or want of ordinary care which has directly contributed to produce the injury complained of."

To this charge the defendant excepted. The jury found a verdict for the plaintiff for $12,000, upon which judgment was entered. On appeal to the Supreme Court of the State the judgment was affirmed; and to review the latter judgment the case is brought here.

At the trial, and in the Supreme Court of the State, it was contended by the defendant, and the contention is renewed here, that the Law of Kansas of 1874 is in conflict with the 14th Amendment of the Constitution of the United States, in that it deprives the Company of its property without due process of law, and denies to it the equal protection of the laws.

In support of the first position the Company calls the attention of the court to the rule of law exempting from liability an employer for injuries to employés caused by the negligence or incompetency of a fellow servant, which prevailed in Kansas and in several other States previous to the Act of 1874, unless he had employed such negligent or incompetent servant without reasonable inquiry as to his qualifications, or had retained him after knowledge of his negligence or incompetency. The rule of [208] law is conceded where the person injured, and the one by whose negligence or incompetency the injury is caused, are fellow servants in the same common employment, and acting under the same immediate direction. *Chicago, M. & St. P. R. Co.* v. *Ross*, 112 U. S. 377, 389 [28: 787, 792]. Assuming that this rule would apply to the case presented but for the Law of Kansas of 1874, the contention of the Company, as we understand it, is that that law imposes upon railroad companies a liability not previously existing, in the enforcement of which their property may be taken; and thus authorizes, in such cases, the taking of property without due process of law, in violation of the 14th Amendment. The plain answer to this contention is that the liability imposed by the law of 1874 arises only for injuries subsequently committed; it has no application to past injuries, and it cannot be successfully contended that the State may not prescribe the liabilities under which corporations created by its laws shall conduct their business in the future, where no limitation is placed upon its power in this respect by their charters. Legislation to this effect is found in the statute books of every State. The hardship or injustice of the Law of Kansas of 1874, if there be any, must be relieved by legislative enactment. The only question for our examination, as the law of 1874 is presented to us in this case, is whether it is in conflict with clauses of the 14th Amendment. The supposed hardship and injustice consist in imputing liability to the Company, where no personal wrong or negligence is chargeable to it or to its directors. But the same hardship and injustice, if there be any, exist when the Company, without any wrong or negligence on its part, is charged for inju-

ries to passengers. Whatever care and precaution may be taken in conducting its business or in selecting its servants, if injury happen to the passengers from the negligence or incompetency of the servants, responsibility therefor at once attaches to it. The utmost care on its part will not relieve it from liability, if the passenger injured be himself free from contributory negligence. The law of 1874 extends this doctrine, and fixes a like liability upon railroad companies, where injuries are [209] subsequently suffered by employés, though it may be by the negligence or incompetency of a fellow-servant in the same general employment and acting under the same immediate direction. That its passage was within the competency of the Legislature we have no doubt.

The objection that the Law of 1874 deprives the railroad companies of the equal protection of the laws is even less tenable than the one considered. It seems to rest upon the theory that legislation which is special in its character is necessarily within the constitutional inhibition; but nothing can be further from the fact. The greater part of all legislation is special, either in the objects sought to be attained by it or in the extent of its application. Laws for the improvement of municipalities, the opening and widening of particular streets, the introduction of water and gas, and other arrangements for the safety and convenience of their inhabitants, and laws for the irrigation and drainage of particular lands, for the construction of levees and the bridging of navigable rivers, are instances of this kind. Such legislation does not infringe upon the clause of the 14th Amendment requiring equal protection of the laws, because it is special in its character; if in conflict at all with that clause, it must be on other grounds. And when legislation applies to particular bodies or associations, imposing upon them additional liabilities, it is not open to the objection that it denies to them the equal protection of the laws, if all persons brought under its influence are treated alike under the same conditions. A law giving to mechanics a lien on buildings constructed or repaired by them for the amount of their work, and a law requiring railroad corporations to erect and maintain fences along their roads, separating them from land of adjoining proprietors so as to keep cattle off their tracks, are instances of this kind. Such legislation is not obnoxious to the last clause of the 14th Amendment, if all persons subject to it are treated alike under similar circumstances and conditions in respect both of the privileges conferred and the liabilities imposed. It is conceded that corporations are persons within the meaning of the Amendment. *Santa Clara County* v. *Southern* [210] *Pac. R. R. Co.* 118 U. S. 394 [30: 118]; *Pembina Con. Silver Min. & M. Co.* v. *Pennsylvania*, 125 U. S. 181 [31: 650]. But the hazardous character of the business of operating a railway would seem to call for special legislation with respect to railroad corporations, having for its object the protection of their employés as well as the safety of the public. The business of other corporations is not subject to similar dangers to their employés, and no objections, therefore, can be made to the legislation on the ground of its making an unjust discrimination. It meets a particular necessity, and all railroad corporations are, without distinction, made subject to the same liabilities. As said by the court below, it is simply a question of legislative discretion whether the same liabilities shall be applied to carriers by canal and stage coaches and to persons and corporations using steam in manufactories. See *Missouri Pac. R. Co.* v. *Humes*, 115 U. S. 512, 523 [29: 463, 466]; *Barbier* v. *Connolly*, 113 U. S. 27 [28: 923]; *Soon Hing* v. *Crowley*, Id. 703 [28:1145.]

Judgment affirmed.

MINNEAPOLIS AND ST. LOUIS RAILWAY COMPANY, *Plff. in Err.*, [210]

v.

FRED. C. HERRICK.

(See S. C. Reporter's ed. 210-212.)

Iowa law as to master and servant.

1. The law of Iowa imposing liabilities upon railroad companies for injuries to employés in its service, though caused by the negligence or incompetency of a fellow servant, is not in conflict with the Fourteenth Amendment to the Constitution of the United States.

2. Missouri Pacific Railway Co. v. Mackey, *ante*, 107, followed.

[No. 202.]

Argued April 2, 3, 1888. Decided April 23, 1888.

IN ERROR to the Supreme Court of the State of Minnesota, to review a judgment in favor of plaintiff, for injuries sustained by him through the negligence of defendant's engineer. *Affirmed.*

Reported below, 31 Minn. 11.

The facts are fully stated in the opinion.

Mr. **C. K. Davis**, for plaintiff in error:

The Statute of Iowa is void as in conflict with the Fourteenth Amendment to the Constitution of the United States.

Ex parte Virginia, 100 U. S. 339 (25:676); *Tiernan* v. *Rinker*, 102 U. S. 123 (26:103); *Weil* v. *Calhoun*, 25 Fed. Rep. 865; *Stockton Laundry Case*, 26 Fed. Rep. 611; *Virginia* v. *Rives*, 100 U. S. 313 (25:667); *Santa Clara County* v. *Southern Pac. R. R. Co.* 18 Fed. Rep. 385; *S. C.* 118 U. S. 396 (30:118); *Yick Wo* v. *Hopkins*, Id. 356 (30:220); *Pearson* v. *Portland*, 69 Me. 278; *San Mateo County* v. *Southern Pac. R. R. Co.* 8 Am. & Eng. R. R. Cas. 1; *Northern Pac. R. R. Co.* v. *Carland*, 5 Mont. 146.

When the natural and reasonable effect of a state statute is to violate the Federal Constitution, it will be void.

Henderson v. *Mayor of N. Y.* 92 U. S. 259 (23:543); *Chy Lung* v. *Freeman*, Id. 275 (23:550); *Neal* v. *Delaware*, 103 U. S. 370 (26:567); *Soon Hing* v. *Crowley*, 113 U. S. 703 (28:1145); Cooley, Const. Lim. 4th ed. 719 (marg. p. 577) *et seq.*; *Bank Tax Case*, 69 U. S. 2 Wall. 200 (17:793).

A corporation is a person, and, as such, entitled to the equal protection of the laws.

U. S. Bank v. *Deveaux*, 9 U. S. 5 Cranch, 61, 87 (3: 38, 44); *Society for Propagation of Gospel* v. *New Haven*, 21 U. S. 8 Wheat. 464 (5:662).

Before the adoption of this statute the common-law rule was of general application in Iowa, that the principal is not liable for damage sus-

tained by an employé by the negligence of a co-employé.

Sullivan v. *Mississippi & M. R. R. Co.* 11 Iowa, 421.

This common-law rule is still in force in Iowa, except as provided by the statute in question.

Peterson v. *Whitebreast Coal & Min. Co.* 50 Iowa, 678.

This statute is not an exercise of the police power.

Yick Wo v. *Hopkins*, 118 U. S. 356 (30:220); *Barbier* v. *Connolly*, 113 U. S. 27 (28:923); *Soon Hing* v. *Crowley, supra; Campbell* v. *Holt*, 115 U. S. 620 (29:483).

Mr. **Edward J. Hill,** for defendant in error:

The provisions of the Fourteenth Amendment were not intended to apply to cases like the one at bar.

Slaughter House Cases, 83 U. S. 16 Wall. 36 (21:394); *U. S.* v. *Dewitt*, 76 U. S. 9 Wall. 41 (19:593) and cases cited; *New York* v. *Miln*, 36 U. S. 11 Pet. 102 (9:648); *License Tax Cases*, 72 U. S. 5 Wall. 471 (18:500); Cooley, Const. Lim. 4th ed. 498; *U. S.* v. *Cruikshank*, 92 U. S. 542-545 (23:588).

There is nothing in this statute repugnant to such amendment.

McAunich v. *Mississippi & M. R. R. Co.* 20 Iowa, 338; *Deppe* v. *Chicago, R. I. & P. R. Co.* 36 Iowa, 52; *Schroeder* v. *Chicago, R. I. & P. R. Co.* 41 Iowa, 344; *Potter* v. *Chicago, R. I. & P. R. Co.* 46 Iowa, 399; Cooley, Const. Lim. 4th ed. 489; *Thorpe* v. *Rutland & B. R. R. Co.* 27 Vt. 149; Laws Wisconsin, 1875, chap. 173; *Ditberner* v. *Chicago, M. & St. P. R. Co.* 47 Wis. 138; Laws Minn. 1887, chap. 13; Code Ga. 1873, § 2083; *Georgia R. R. & Bkg. Co.* v. *Goldwire*, 56 Ga. 196; *Marsh* v. *South Carolina R. R. Co.* Id. 274; *Georgia R. R. & Bkg. Co.* v. *Rhodes*, Id. 645; Rev. Stat. Mo. 1855, p. 647; *Schultz* v. *Pacific R. R. Co.* 36 Mo. 13.

The whole doctrine of exemption is an exception to the ancient general rule or maxim of the common law, "*Respondeat superior.*"

Chicago & N. W. R. Co. v. *Moranda*, 93 Ill. 302; English Factory Acts, and English Coal Mines Regulation Act, 1872, cited in 2 Thomp. Neg. 1007.

Statutes imposing duties and liabilities on railroad companies and other corporations are to be found on the statute books of almost every State, and, if general in their application to all such corporations, they are valid.

Johnson v. *Chicago, M. & St. P. R. Co.* 29 Minn. 429; *Blake* v. *Winona & St. P. R. R. Co.* 19 Minn. 418; *S. C.* 94 U. S. 180 (24:99); *Munn* v. *Illinois*, Id. 113 (24:77); *Chicago, B. & Q. R. R. Co.* v. *Iowa*, Id. 155 (24:94); *Peik* v. *Chicago & N. W. R. Co.* Id. 164 (24:97).

Mr. Justice **Field** delivered the opinion of the court:

The defendant is a corporation created under the laws of Minnesota, and in December, 1881, [211] it operated a railroad extending from Minneapolis, in that State, to Fort Dodge, in Iowa. A law of Iowa, then in force, provides that "every corporation operating a railway shall be liable for all damages sustained by any person, including employés of such corporation, in consequence of the neglect of agents, or by any mismanagement of the engineers or other employés of the corporation, and in consequence of the willful wrongs, whether of commission or omission, of such agents, engineers, or other employés, when such wrongs are in any manner connected with the use and operation of any railway on or about which they shall be employed; and no contract which restricts such liability shall be legal or binding."

On the 6th of December, 1881, the plaintiff was employed by the defendant as a brakeman on one of its cars, and on that day, in Webster, in Iowa, it became his duty to make a coupling of an engine and a freight car. The engine was in charge of one of its employés, an engineer, and, whilst the plaintiff was making the coupling, the engine was, by the negligence and mismanagement of the engineer, driven against the car, causing severe and permanent injuries to the plaintiff. To recover damages for the injuries thus sustained, he brought this action in a District Court of Minnesota, relying upon the law of Iowa quoted above. The defendant in its answer alleged, and on the trial contended, that this law was abrogated by that provision of the Fourteenth Amendment to the Constitution of the United States which declares that no State shall deprive any person of property without due process of law, nor deny to any person within its jurisdiction the equal protection of the laws. The district court held the law to be in full force, and that under it the Railroad Company was responsible to the plaintiff for the injuries sustained by him through the negligence of the engineer. The plaintiff accordingly recovered a verdict for $2,000, upon which judgment was entered. Upon appeal to the State Supreme Court the judgment was affirmed, and to review that judgment the case is brought here.

We have just decided the case of *Missouri Pac. R. Co.* v. *Mackey* [*ante*, 107], where similar objections were raised to a law of Kansas, [212] which on the point here involved is not essentially different from the law of Iowa, namely, in imposing liabilities upon railroad companies for injuries to employés in its service, though caused by the negligence or incompetency of a follow servant; and we held that the law was not in conflict with the clauses referred to in the Fourteenth Amendment.

On the authority of that case *the judgment in the present one must be affirmed; and it is so ordered.*

PEORIA AND PEKIN UNION RAILWAY COMPANY, *Appt.*, [200]

v.

CHICAGO, PEKIN AND SOUTHWESTERN RAILROAD COMPANY.

(See S. C. Reporter's ed. 200-205.)

Receiver's liability for rent of railroad.

In proceedings to compel a receiver in a foreclosure action to pay rent for use of tracks and terminal facilities, where the amount of rent was left uncertain,—*Held* that a contract between other parties which was oppressive in its terms was not a test of the amount of rent which the receiver should pay; and that there being no evidence that the sum paid by defendant was not all that the use of property was worth, the decision of the court below to dismiss the proceedings was correct.

[No. 210.]

Argued April 6, 1888. Decided April 23, 1888.

APPEAL from a decree of the Circuit Court of the United States for the Northern District of Illinois, dismissing a petition to compel receiver of defendant to pay certain sum for rent of tracks and terminal facilities. *Affirmed.*

Opinion below, 18 Fed. Rep. 484.

The facts are stated by the court.

Messrs. **Wager Swayne** and *C. Walter Artz*, for appellant:

There was an implied contract to pay rent.

The rent demanded is reasonable.

Central Trust Co. v. *Wabash, St. L. & P. R. R. Co.* 29 Fed. Rep. 559.

Mr. **Thomas S. McClelland,** for appellee:

A receiver has no power to make any important contract touching the management of the property, except by the order of the court.

Hooper v. *Winston*, 24 Ill. 353; *Atty.-Gen.* v. *Vigor*, 11 Ves. Jr. 563; *Waters* v. *Taylor*, 15 Ves. Jr. 25; *Verplanck* v. *Mercantile Ins. Co.* 2 Paige, 452; *Re Van Allen*, 37 Barb. 225; *Re Globe Ins. Co.* 6 Paige, 102; *Lehigh Coal & Nav. Co.* v. *Central R. R. Co.* 35 N. J. Eq. 426; *Yeager* v. *Wallace*, 44 Pa. 296; *Grant* v. *Davenport*, 18 Iowa, 179.

The compensation due the appellant for the use of its tracks, etc., was the sum theretofore paid, as a holding over, with consent of owner.

Clapp v. *Noble*, 84 Ill. 62; *Golloway* v. *Kerly*, 9 Bradw. 501; *Prickett* v. *Ritter*, 16 Ill. 96; *McKinney* v. *Peck*, 28 Ill. 174; *Otto* v. *Jackson*, 35 Ill. 349.

[201] *Mr. Justice* **Gray** delivered the opinion of the court:

Pending a suit in equity by the Farmers Loan and Trust Company against the Chicago, Pekin and Southwestern Railroad Company, to forclose a mortgage of its road, the Peoria and Pekin Union Railway Company filed this intervening petition to compel the receiver of the defendant company, appointed in that suit, to pay to the petitioner the sum of $16,231.55 for rent of tracks and terminal facilities at Peoria from February 1, 1881, to March 1, 1882.

From the documents in the record, and the very argumentative and somewhat conflicting affidavits of Cohr, the vice-president and general counsel of the petitioner, and of Hinckley, formerly the president and now the receiver of the defendant, the material facts appear to be as follows:

Peoria and Pekin are ten miles apart, on opposite sides of the Illinois River, and connected by two lines of railway tracks, that of the Peoria and Springfield Railroad Company on [202] the east side of the river, and that of the Peoria, Pekin and Jacksonville Railroad Company on the west side of the river, and each crossing the river on a bridge. Connecting with these at Peoria or at Pekin are the lines of four other railroad companies: the Wabash, St. Louis and Pacific Railway Company; the Indiana, Bloomington and Western Railway Company; the Peoria, Decatur and Evansville Railway Company; and the Peoria and Jacksonville Railroad Company.

The petitioner was organized in 1880, its whole capital stock being owned by these four companies, one quarter by each. On February 1, 1881, the petitioner, having obtained a lease of the Peoria and Springfield Railroad, and acquired by purchase the Peoria, Pekin and Jacksonville Railroad, and having improved the terminal accommodations and facilities at Peoria, entered into a contract in writing with the four companies aforesaid, by which it leased to them for fifty years the tracks between Pekin and Peoria, with the use of its terminal accommodations and facilities at Peoria; and each of the four companies agreed to pay a yearly rent of $22,500, and a proportionate share of the expenses of maintaining the terminal accommodations at Peoria, and of terminal services, according to the business done by each; and it was further agreed as follows:

"Eighth. Any other railroad company, whose road shall now or hereafter run into said City of Peoria, or that shall desire to procure an entrance into said city, shall be allowed to acquire the same rights and privileges as the said several lessees, but no other, and upon no less rental, upon entering into a like contract hereto with the party of the first part, except as to representation in the board of directors of the party of the first part and ownership in its capital stock."

Before February 1, 1881, the trains of the defendant company had been run over the road of the Peoria and Springfield Railroad Company, at a rate of compensation fixed by agreement between the receivers of those two companies.

On February 1, 1881, Cohr, in behalf of the petitioner, demanded of Reed, then the receiver of the defendant company, that he should enter into a contract to pay, during his receivership, the same rent and other charges as the four companies; and insisted that he had no authority to allow the use of the petitioner's tracks [203] on any other terms. Reed objected that the terms demanded were exorbitant and oppressive, and that he had no authority to assent to them without an order of the court; and it was thereupon agreed that the defendant company should enjoy the use of the tracks and the terminal facilities, and should pay the like terminal charges as the four companies, and should also pay such rent from February 1, 1881, as should be determined by *Judge* Drummond, upon an application to be forthwith made by Reed, and that, until such determination, the defendant company should pay at the same rate as formerly paid to the receiver of the Peoria and Springfield Railroad Company, and should pay the residue, if any, when the judge should so determine.

Pursuant to this agreement, Reed made an application in writing to *Judge* Drummond, who, as Cohr testifies, in December, 1881, or early in 1882, informed him that he declined to decide upon it, and that, unless the defendant settled with the petitioner by March 1, 1882, the petitioner might shut out the defendant from its tracks. Upon notice to that effect, Reed declined to pay, and on March 1, 1882, ceased to use the tracks of the petitioner.

The defendant paid the petitioner for the use of its tracks and terminal facilities from February 1, 1881, to March 1, 1882, at the same rate as previously paid to the receiver of the Peoria and Springfield Railroad Company, amounting to $17,537.83. The petitioner

claimed for the same period the sum of $9,394.-38 for terminal expenses, and the sum of $24,-375 for rent, and applied the sum received from the defendant to the payment in full of the first of these claims, and in part of the second, leaving $16,231.55, which the petitioner now sought to recover.

The master, to whom the petition was referred, reported that there was nothing before him which enabled him "to report the amount of compensation which the petitioner should have, except as the result of the conditions upon which the receiver continued to use the property after the attempted making of a contract between the parties resulting in the notice referred to;" but found "from their relations, and the implied understanding upon the part of the receiver arising from them," that the sum claimed was due from the defendant to the petitioner.

[204]

The circuit court sustained exceptions taken by the defendant to the master's report, and dismissed the petition. Its opinion, which is not made part of the record, is reported in 18 Fed. Rep. 484. The petitioner appealed to this court.

The only matter in dispute is whether the defendant is liable to the petitioner, by way of rent, from February 1, 1881, to March 1, 1882, for anything more than has already been paid. There is no more ground for implying an assent by the defendant to the claim of the petitioner, than for implying an assent of the petitioner to the position of the defendant. When the petitioner demanded of the receiver of the defendant the like rent, as well as the like rate for terminal expenses, as was to be paid by the four companies, the receiver of the defendant declined to assent to the demand without an order of the court whose officer he was. The parties thereupon came to a temporary arrangement, by which the defendant agreed to pay the terminal expenses demanded, and the parties submitted the question of rent to the circuit judge as an arbitrator, and it was agreed that until his determination the defendant should continue to pay the same charges that it had paid before February 1, 1881.

By the terms of that agreement, then, the amount of rent to be paid by the defendant was left uncertain, and dependent upon the award of the judge. The affidavit of the petitioner's own witness shows that the judge, after some delay, declined to act as an arbitrator. The judge's view upon the subject appears in the opinion afterwards delivered by him in the circuit court, in which he said: "On looking into the question at the time, the judge was of the opinion that the contract which was demanded of the receiver by the Peoria and Pekin Union Company was oppressive in its terms, and doubted whether the receiver could afford to pay the prices then demanded; but at the same time, admitting that the Peoria and Pekin Company was the owner of the property and that it had the right to prescribe on what terms the receiver should do his railroad business between Pekin and Peoria and in the latter city, stated that if the receiver would not accept the terms he could not be permitted to have the use of the property of the Peoria and Pekin Union Company." The judge, while he recognized the right of the petitioner, as owner of the property, to exclude the defendant from its use, if the defendant would not accept the petitioner's terms, in no way intimated that upon the facts of the case the defendant could be held to have accepted those terms.

[205]

There is no evidence tending to show that the sum paid by the defendant is not all that its use of the property was fairly worth. The rent which each of the four companies, who owned all the stock of the petitioner company, agreed by express contract to pay that company, affords no test of what is a reasonable rent as between the petitioner and a stranger, like this defendant, who had no interest in its stock, and was no party to that contract. As observed in the opinion of the circuit court: "The Peoria and Pekin Union Company was really owned by the other companies which made the agreement with it, and consequently they were substantially owners of the property of the Peoria and Pekin Company. It was substantially a contract, therefore, made by one party with itself, which it was insisted should be the test of payment by the receiver."

Decree affirmed.

RICHARD H. PORTER, *Appt.*, [235]
v.
STEPHEN V. WHITE.

(See S. C. Reporter's ed. 235-245).

Appeal, effect of—lien of attorney on fund.

1. An appellant in this court who has appealed from a decree of the General Term of the Supreme Court of the District of Columbia is only entitled to relief in regard to that portion of the decree which was appealed from the special term to the general term.

2. A power of attorney to prosecute a claim for one half of the recovery, on which is indorsed a substitution of plaintiff as the attorney, which substitution contains no assignment of any specific interest in the claim and no provision creating any lien upon it or its proceeds, does not give the plaintiff any equitable lien on the fund by distinct appropriation, or show any agreement that he should be paid out of the fund, to such an extent that he can compel an assignment to himself of a part of the fund, or the execution to himself of authority to collect the same from the Secretary of State.

[No. 221.]

Argued April 12, 1888. Decided April 30, 1888.

APPEAL from a decree of the Supreme Court of the District of Columbia in General Term reversing a decree of the Special Term that defendant pay certain moneys to plaintiff and assign to plaintiff, by such form of conveyance as will be recognized by the State Department, a portion of the payments due upon a Mexican award. *Affirmed.*

Reported below, 5 Mackey, 180, 4 Cent. Rep. 151.

The facts are fully stated in the opinion.

Messrs. **S. S. Henkle, J. J. Johnson** and *Wm. E. Earle*, for appellant.

Mr. **Stephen V. White**, appellee, in person.

Mr. Justice **Blatchford** delivered the opinion of the court:

This is a bill in equity, filed in the Supreme Court of the District of Columbia, by Richard H. Porter against Stephen V. White. The case arises as follows: On the 4th of July, 1868, a

convention was concluded between the United States and Mexico (15 Stat. at L. 679), providing for the adjustment of the claims of citizens of either country against the other, under which all claims on the part of citizens of either country upon the other, arising from injuries to their persons or property by the authorities of the other, which might have been presented to either government for its interposition with the other since the signature of the Treaty of Guadalupe Hidalgo, of 1848, and which yet remained unsettled, as well as any other such claims which might be presented within the time specified in the convention (but not covering any claim arising out of a transaction of a date prior to February 2, 1848), were referred [236] to two commissioners, one to be appointed by each government, and the two commissioners to appoint an umpire to act in cases on which they might themselves differ in opinion. The decision on each claim was to be given in writing, and to designate whether any sum which might be allowed should be payable in gold or in the currency of the United States. It was provided in the convention that each government engaged "to consider the decision of the commissioners conjointly, or of the umpire, as the case may be, as absolutely final and conclusive upon each claim decided upon by them or him, respectively, and to give full effect to such decisions, without any objection, evasion, or delay whatsoever." It was further provided that the total amount awarded in all the cases decided in favor of the citizens of one government should be deducted from the total amount awarded to the citizens of the other, and the balance, to the amount of $300,000, should be paid at the City of Mexico or at the City of Washington, in gold or its equivalent, within twelve months from the close of the commission, to the government in favor of whose citizens the greater amount might have been awarded, without interest or any other deduction than that specified in article 6 of the convention; and that the residue of such balance should be paid in annual installments, to an amount not exceeding $300,000, in gold or its equivalent, in any one year, until the whole should have been paid. Article 6 provided for the compensation of the commissioners, the umpire, and the secretaries, and provided that the whole expenses of the commission, including contingent expenses, should be defrayed by a ratable deduction on the amount of the sums awarded by the commission, provided that such deduction should not exceed 5 per cent on the sums so awarded, and that the deficiency, if any, should be defrayed in moieties by the two governments. By successive conventions (17 Stat. at L. 861, 18 Stat. at L. 760, 18 Stat. at L. 883) the duration of the commission, which had been originally limited to two years and six months from the day of the first meeting of the commissioners, was extended until the 31st of January, 1876; and by a convention concluded April 29, 1876 (19 Stat. at L. 642), the time for decision by the umpire was extended until the 20th of November, 1876.

[237] By an Act of Congress passed June 18, 1878, chap. 262, 20 Stat. at L. 144, entitled "An Act to Provide for the Distribution of the Awards Made under the Convention between the United States of America and the Republic of Mexico, Concluded on the Fourth Day of July, Eighteen Hundred and Sixty-eight," it was provided (sec. 1) as follows: "That the Secretary of State be, and he is hereby, authorized and required to receive any and all moneys which may be paid by the Mexican Republic under and in pursuance of the conventions between the United States and the Mexican Republic for the adjustment of claims, concluded July fourth, eighteen hundred and sixty-eight, and April twenty-ninth, eighteen hundred and seventy-six; and whenever, and as often as, any installments shall have been paid by the Mexican Republic on account of said awards, to distribute the moneys so received in ratable proportions among the corporations, companies, or private individuals respectively in whose favor awards have been made by said commissioners, or by the umpires, or to their legal representatives or assigns, except as in this Act otherwise limited or provided, according to the proportion which their respective awards shall bear to the whole amount of such moneys then held by him, and to pay the same, without other charge or deduction than is hereinafter provided, to the parties respectively entitled thereto. And, in making such distribution and payment, due regard shall be had to the value, at the time of such distribution, of the respective currencies in which the said awards are made payable; and the proportionate amount of any award of which by its terms the United States is entitled to retain a part shall be deducted from the payment to be made on such award, and shall be paid into the Treasury of the United States as a part of the unappropriated money in the treasury." Sections 3 and 4 of the same Act provided as follows: "Sec. 3. That out of the payments and installments received from Mexico, as aforesaid, on account of said awards, and out of the moneys which shall be received by the Secretary of State under the provisions of this Act, the Secretary of State shall, when and as the same shall be received and paid, and before any payment to claimants, deduct therefrom, and retain, a sum not to exceed five per [238] centum of said moneys awarded to citizens of the United States, until the aggregate of the amounts so deducted and retained shall equal the sum of one hundred and fourteen thousand nine hundred and forty-eight dollars and seventy-four cents, being the amount of the expenses of the commission, including contingent expenses, paid by the United States in accordance with article six of the Treaty, as ascertained and determined in pursuance of the provisions of the said Treaty; which said sums, when and as the same are deducted and retained, shall be, by the Secretary of State, transmitted to the Secretary of the Treasury, and passed to the account of, and be regarded as, unappropriated money in the treasury. Sec. 4. That in the payment of money, in virtue of this Act, to any corporation, company, or private individual, the Secretary of State shall first deduct and retain, or make reservation of, such sums of money, if any, as may be due to the United States from any corporation, company, or private individual in whose favor awards shall have been made under the said convention."

Among the awards made by the commission was one to the legal representatives of Austin M. Standish, of $42,486.30; one to the legal

representatives of Monroe M. Parsons, of $50,-828.76; and one to the legal representatives of Aaron A. Conrow, of $50,497.26,—those three persons having been citizens of the United States who were unlawfully killed in Mexico, in 1865, by the Mexican authorities. The awards were made in 1874 or 1875. The bill avers that, in 1869 or 1870, the plaintiff was authorized by powers of attorney from the legal representative of Standish, Parsons, and Conrow to prosecute their claims for such unlawful killing, before the commission; that the powers of attorney to the plaintiff stipulated that he should be entitled, as compensation for his services and expenses in the prosecution of the claims, to one half of whatever sums might be awarded by the commission to such legal representatives; that he prosecuted the cases with success, and paid or assumed to pay all the necessary expenses thereof; that, by virtue of his contract, he became entitled to the 239] one half of the sums awarded, and the legal representatives of the parties recognized his right to such moieties, and respectively claimed for themselves only the one half of the awards; that there was at the time of the filing of the bill, in December, 1880, in the custody of the Secretary of State of the United States, something over $20,000 applicable to the moieties of the plaintiff upon the three awards, and the Secretary was ready and willing to pay the same whenever it should be determined who was entitled thereto; that the plaintiff had, in 1876, borrowed from the defendant, $5,000, and given him, as security, a lien upon the moiety of the plaintiff in the Parsons award, and a power of attorney to collect such moiety; that, in 1877, he borrowed from the defendant $2,-500 more, and executed to him an absolute assignment of the plaintiff's moiety of the Standish award, with the agreement that, although such assignment was absolute in form, it was to be simply a security for the money borrowed and for services to be performed by the defendant in collecting the moieties for the plaintiff; that the Secretary of State had refused to pay the plaintiff his interest in the awards until the rights of certain parties who had filed claims with the Secretary upon the plaintiff's interest in the fund should be settled; that the defendant represented to the plaintiff that he (the defendant) could procure the payment of his interest in the awards, if the plaintiff would authorize him to do so, and that, believing such representation, he gave to the defendant "power of attorney to collect not only the Standish and Parsons cases, which had been assigned to him, but gave him also the said Conrow case, in which the defendant had no interest whatever;" that the defendant was now claiming that he was the absolute owner of the two moieties in the cases of Parsons and Standish, while his only real claim upon the same was on account of his loan of the $7,500; that the defendant also refused to recognize the right of the plaintiff to the moiety of the Conrow claim, falsely alleging that he had purchased the plaintiff's interest therein from one Richard H. Musser, who set up a false claim to the one half of the plaintiff's moiety of the Conrow claim; that the Secretary had decided that none of the claimants had any lien upon 240] the fund except the plaintiff and the defendant, and was ready and willing to pay the amount which was in his control, applicable to the three moieties, upon the joint receipt of the plaintiff and the defendant; and that, inasmuch as the defendant held absolute assignments for the Parsons and Standish cases, the Secretary would not undertake to decide the rights between the plaintiff and the defendant, but left them to settle their controversy by adjustment, or by the determination of a court of competent jurisdiction.

The bill waives an answer on oath, and prays for a decree that the defendant holds the assignment of the plaintiff's moieties in the cases of Standish and Parsons as security for the plaintiff's indebtedness to him for money borrowed, and for no other purpose and in no other right; that he may be ordered to cancel the moieties or reassign them to the plaintiff, upon the payment to him by the plaintiff of the amount of money, with interest, which the court may find that the plaintiff owes to him; and that he may be decreed to empower the plaintiff to collect from the Secretary the amount of the installments in his hands applicable to all three of the cases. The bill also prays for such other and further relief as may be necessary.

A demurrer to the bill was overruled, and the defendant put in an answer. The substance of the answer is that, in 1869 or 1870 the legal representatives or next of kin of the three persons referred to made written executory contracts with Musser, whereby he undertook to furnish the necessary money and do the necessary legal work to establish the claims, and the claimants undertook, on such services and money being furnished, to pay him a fee which should equal the moiety of any award in the premises, in each case; that, in pursuance of such contracts, the claimants executed powers of attorney whereby Musser was constituted attorney in fact, irrevocable, with a statement that the power of attorney was coupled with an interest; that, about that time, there was a verbal contract made between Musser and the plaintiff, whereby it was agreed that the plaintiff should furnish the money and Musser should do the legal work, and the two should divide the fees of Musser under the contract; that the plaintiff failed to furnish the money to [241] carry on the suits, and undertook to dismiss Musser from the cases, leaving Musser with the responsibility of furnishing money and doing the legal work; that, in the discharge of his duties under his agreements with the claimants, Musser retained the legal firm of Pike & Johnson, and the claimants agreed in writing that that firm should receive 25 per cent of the resulting awards, to be taken from Musser's moiety; that, on the making of the awards, the several claimants executed assignments to Musser and Pike & Johnson, for a moiety of each of the awards; and that, on the 12th of February, 1879, Musser and Pike & Johnson, for the consideration of $30,000, sold and assigned such moiety to the defendant in his own right. There are other allegations in the answer, which it is unnecessary to set forth, in the view we take of the case.

A replication was put in to the answer, and proofs were taken on both sides. The court, in special term, in February 1883, made a de-

cree as follows: "The court finds that the plaintiff is entitled to the one full, equal half of the attorney's fees in the awards against Mexico by the joint United States and Mexican commission in the case of Mary Ann Conrow, referred to in the bill and proceedings in this case, and the defendant is entitled to the other half. It appearing to the court that the defendant White has been recognized by the State Department as entitled to the whole of the said attorney's fees in said award, and that he has already been paid by the State Department, from the installments heretofore paid by Mexico upon said award, the following sums, at the times following, to wit: on the 5th day of May, 1881, $8,896.81; on the 11th day of April, 1882, $1,806.06; and that there is now on hand in the State Department the sum of $1,806.06, applicable to said attorney's fee in said Conrow case, and that there are seven more annual installments to be paid by Mexico upon said award, it is, this 27th day of February, 1883, ordered, adjudged, and decreed that the said defendant do, within five days of this date, pay to the solicitors of said complainant Porter the one half the said sums by him heretofore received upon said awards, with interest thereon at the rate of six per cent per annum from [242] the times of payment to him as aforesaid, to wit, $4,448.41, with interest from the 5th day of May, 1881, and $903.03, with interest thereon from the 11th day of April, 1882; that said defendant assign and transfer to the plaintiff, by such form of conveyance as will be recognized by the State Department, the one equal half of the payments yet to be made by Mexico upon said award applicable to attorney's fee, including the amount now in said Department applicable to said purpose, and that the defendant pay the costs of this suit within ten days, or that in default thereof, as well as in default or the payment of the amount found due to the said Porter, execution do issue therefor, as upon judgment at law."

This decree was a decision in favor of the plaintiff in regard to the Conrow award only. It did not grant the relief prayed by the bill in respect to the Parsons and Standish awards, and decreed nothing in favor of the plaintiff in regard to those awards. There is nothing in the record to show that either party appealed to the general term of the court; but there appears in the record a decree of the court in general term, made December 24, 1883, which reads as follows: "This cause came on to be heard at this term, and was argued by counsel: and thereupon, on this 24th day of December, A. D. 1883, upon consideration thereof, it is found by the court that the equities thereof are with the defendant, and that the respective awards of S. Kearney Parsons against Mexico and Mildred Standish against Mexico were not assigned and delivered by the plaintiff to the defendant as security for the return of money, and that the plaintiff is not the assignee of any portion of the award of Mary Ann Conrow against Mexico, but that the defendant, Stephen V. White, is the assignee in his own right of a moiety of each of the said three awards: wherefore it is ordered, adjudged, and decreed, by the court, that the judgment and decree heretofore entered in favor of plaintiff against the defendant on February 27, 1883, in the special term, be, and the same is hereby, vacated, annulled, and held for naught, and the bill herein is dismissed; and that the defendant, Stephen V. White, do have and recover of the plaintiff, Richard H. [243] Porter, his costs herein expended, taxed at $—; and that he have execution therefor as in a suit of law; and to said order the plaintiff prays an appeal to the Supreme Court of the United States, which is allowed."

Although the plaintiff has appealed from the whole of the decree of the court in general term, it is stated in the brief of his counsel that he did not appeal from the decree of the court in special term, and is therefore concluded by the failure of that decree to award relief to him in respect to the Parsons and Standish claims, and that the dispute in this court is limited to his right to one half of the fees in the Conrow case. Therefore, although the decree of the court in general term finds that the awards in favor of the Parsons and Standish claims were not assigned and delivered by the plaintiff to the defendant as security for the return of money; and although that decree further finds that the defendant is the assignee in his own right of a moiety of each of those two awards; as well as of a moiety of the Conrow award, and although the plaintiff appeals generally from that decree, no question arises in this court as to any claim of the plaintiff to any share of the Parsons and Standish awards, but the only portion of the decree of the court in general term drawn in question is that which declares that the plaintiff is not the assignee of any portion of the Conrow award, but that the defendant is the assignee in his own right of a moiety of that award.

The claim of Porter in respect to the Conrow award is based upon the contention that he procured Musser to obtain, for a compensation to be paid to him by the plaintiff, powers of attorney from the legal representatives of the three men who had been killed, to prosecute the claims, the powers of attorney and contracts to contain the plaintiff's name as attorney in fact, with a power of substitution; that Musser procured the powers of attorney, and contracts in writing, in each of the cases, for one half of the recovery as a fee, but procured the name of Musser to be inserted as attorney, instead of that of the plaintiff; that, on the plaintiff's complaint of this, Musser substituted the plaintiff as attorney in each of the three cases, by an indorsement on the power of attorney itself; that the [244] legal effect of those substitutions was to make the plaintiff the attorney in all three of the cases, instead of Musser; that, under these substitutions, the plaintiff employed attorneys in Washington, who with him prosecuted the cases to success, Musser aiding in taking testimony; that the plaintiff paid Musser in full for all his services; that Musser had no interest in the fees secured under the contracts with the claimants; and that Musser disputed this, and, in 1872, employed the firm of Pike & Johnson, after the evidence in the cases had been closed, and the printed arguments had been filed, and the cases were awaiting a hearing.

It is further urged, on the part of the plaintiff, that it is admitted in the answer of the defendant that there was a verbal contract between Musser and the plaintiff that the plaintiff should furnish the money and Musser should do

the legal work, and that the two should divide the fees of Musser under the contract with the claimants; and much stress is laid upon the decision of this court in *Peugh* v. *Porter*, 112 U. S. 737 [28:859], made January 5, 1885, after the decree of the court in general term in this suit, in which it is said that the agreement between Musser and Porter was "that each should have an equal interest in the prosecution and proceeds of the claims in case of recovery;" and upon the fact that White was a party to that suit.

But there is no evidence in the case that Porter had any assignment in writing of any interest in the Conrow award, or any written instrument creating any lien upon it, or its proceeds, by way of fee or otherwise, from either the claimants of that award or from Musser. The power of attorney from the widow of Conrow to Musser, dated December 10, 1869, contains no assignment of any specific interest in the claim, and the substitution of Porter by Musser, indorsed on such power of attorney, and dated July 4, 1870, only states that "Richard H. Porter is substituted and authorized to act under the powers hereinabove given."

Under these views, the plaintiff has failed to establish any equitable lien on the Conrow fund, by showing any distinct appropriation of a part
245] of that fund in his favor by the widow of Conrow, either directly or indirectly, or any agreement, direct or indirect, that the plaintiff should be paid out of that fund. *Wright* v. *Ellison*, 68 U. S. 1 Wall. 16 [17:555]; *Trist* v. *Child*, 88 U. S. 21 Wall. 441, 447 [22:623]; *Peugh* v. *Porter*, 112 U. S. 737, 742 [28:859, 860]. On the contrary, the evidence shows that the widow of Conrow, recognizing her agreement with Musser that he should have as compensation one half of the money which should be awarded to her on the claim, executed, on the 28th of March, 1872, a written power of attorney to the firm of Pike & Johnson, to prosecute her claim, which power revoked all prior powers executed by her in that behalf, a like power being executed at the same time by the son of the deceased Conrow; that Mrs. Conrow at that time agreed with Musser and the firm of Pike & Johnson that that firm and Musser should have, between them, as compensation, the one half of whatever should be awarded to her on the claim; that, on the 19th of December, 1878, she made a written request to the Secretary of State to pay one half of the award to herself, one fourth of it to Musser, and one fourth of it to the firm of Pike & Johnson, and that, on the 12th of February, 1879, Musser and the firm of Pike & Johnson, by a written instrument executed by them, assigned to the defendant all their interest in the Conrow claim, the award on that claim having been made to Mrs. Conrow.

It is very clear that the plaintiff has no title to any relief against the defendent, whatever he may have against Musser, who is not a party to this suit. There is nothing in the case of *Peugh* v. *Porter* which can affect the claim of the plaintiff against the defendant.

The decree of the Court below in General Term is affirmed.

THOMAS F. BAYARD, Secretary of State, *Plff. in Err.*, [246]

v.

UNITED STATES, *ex rel.* STEPHEN V. WHITE.

(See S. C. Reporter's ed., 246-250.)

Mandamus, when proper—when not issuable.

1. The writ of mandamus is a remedy to compel the performance of a duty required by law, where the party seeking relief has no other legal remedy, and the duty sought to be enforced is clear and indisputable. Both requisites must concur in every case.

2. The writ should not issue to compel the Secretary of State to pay a sum of money in his hands to one party, where there is a conflicting claim made to the money by another party, between which parties there is a litigation in respect to their rights in the fund.

[No. 988.]

Argued Oct. 11, 12, 1887. Decided April 23, 1888.

IN ERROR to the Supreme Court of the District of Columbia to review a judgment awarding a writ of mandamus, commanding the Secretary of State to pay the relator certain moneys on account of certain awards. *Reversed.*

Opinion below, 7 Cent. Rep. 341, 5 Mackey, 428.

The facts are set forth in the opinion.

Mr. **William A. Maury**, *Asst. Atty-Gen.*, for plaintiff in error:

No case for a mandamus is made in the record.

Marbury v. *Madison*, 5 U. S. 1 Cranch, 137 (2:60).

Repeals by implication are not favored.

Chew Heong v. *U. S.* 112 U. S. 536 (28:770); *Blake* v. *U. S.* 103 U. S. 227 (26:462); *Red Rock* v. *Henry*, 106 U. S. 596 (27:251); *Mississippi* v. *Johnson*, 71 U. S. 4 Wall. 475 (18:437); *Georgia* v. *Stanton*, 73 U. S. 6 Wall. 50 (18:721); *Gaines* v. *Thompson*, 74 U. S. 7 Wall. 347 (19:62); *U. S.* v. *Bayard*, 4 Mackey, 310; *U. S.* v. *Schurz*, 102 U. S. 378 (26:167).

Messrs. **Stephen V. White** and *W. Hallett Phillips* for defendant in error.

Mr. Justice **Blatchford** delivered the opinion of the court:

This is a writ of error to the Supreme Court of the District of Columbia, brought by Thomas F. Bayard, Secretary of State of the United States, to reverse a judgment rendered by that court, in general term, on the 7th of [247]
March, 1887, awarding to Stephen V. White a writ of mandamus commanding the Secretary to pay to White certain sums of money, specifically on hand, computed and set apart by the proper auditing officer of the State Department, on account of certain awards mentioned in the petition for the mandamus, namely: on account of the Conrow award, $1,806.06; on account of the Standish award, $1,519.55; and on account of the Parsons award, $1,817.92.

The petition of White, which was filed April 23, 1886, sets forth that, under the Joint Convention between the United States and Mexico, concluded July 4, 1868, 15 Stat. at L. 679, such proceedings were had that an award was made

to Mary Ann Conrow for $50,497.26, another to S. Kearney Parsons for $50,828.76, and another to Sarah Mildred Standish for $42,486.30; that, before the payment of any part of the awards, White became the assignee of one half of each of them; that the Department of State had recognized White as such asignee, and had paid to him nine installments hitherto paid by Mexico and distributed by the Secretary of State; that on the 31st of January, 1886, a tenth installment was paid by Mexico to the defendant as Secretary of State of the United States, and he had made a ratable distribution of it, having paid other claimants, and especially Parsons and Conrow and Standish, the moieties which they had not assigned to White; that by the first section of the Act of June 18, 1878, chapter 262, 20 Stat. at L. 144, it was made the duty of the Secretary to ratably apportion and pay to the claimants or their assigns each installment of money when received from Mexico; that of the tenth installment there was due to White, on account of the Conrow award, $1,806.06, on account of the Standish award, $1,519.55, and on account of the Parsons award, $1,817.92, which sums were specifically on hand, and the amounts had been computed and set apart by the proper auditing officers of the State Department, but the defendant refused to pay to White those sums of money.

The material provisions of the Joint Convention referred to and of the Act of June 18, 1878, are set forth in the case of *Porter* v. *White*, *ante*, 112.

[248] The answer of the Secretary of State to the petition is as follows: "This respondent, answering, saith that it is true that awards were made by the commission established by the Treaty between the United States and Mexico of the 4th of July, 1868, for the amounts and in favor of the parties named in the said petition, and this respondent is advised that the said relator, Stephen V. White, doth claim an interest in the one half part of each of the said awards, and this respondent doth admit that the rights and interests claimed by said White as aforesaid were recognized by one, although not recognized by another, of the predecessors of this respondent, and payments made to him accordingly; but this respondent saith that he finds it impossible, as the matter now stands, to recognize the claims and pretensions of the said White to the moieties of the said awards, without ignoring the conflicting claims and pretensions of a certain Richard H. Porter, between whom and the said White litigation in respect to the said awards is now, and for a long time has been, pending. And this respondent further saith that he hath always been, and is now, willing to pay whatever sum or sums may be due on the said moieties, out of moneys received, under the said Treaty, from the Republic of Mexico, on an order and acquittance signed by all the rival claimants of the said moieties, which your respondent respectfully submits is as much as could be done by him without embroiling the United States in a litigation in which it has no interest whatever. And this respondent, further answering, saith that the several sums of money mentioned in said petition, and claimed to be due and payable to the relator, are held by him subject to the order and control of the President of the United States, and are disposable by this respondent at the discretion of the President only, and that, as this respondent is advised and believes, there is no law, as hath been mistakenly supposed by the said relator, by which this respondent is invested with authority over the said sum of money independent of the President of the United States; and, it being the opinion of the President that the public interests forbid the making of payments to the said relator in the present condition of things, as hereinbefore set forth, this respondent submits that he is not subject to the process of mandamus in the premises, and he therefore prays that he may be discharged from the said rule, with his proper costs in this behalf sustained."

To this answer White demurred, assigning, in the demurrer, the following reasons for the insufficiency of the answer: "1. It does not deny that the relator, S. V. White, is assignee of the moieties of the awards in controversy. 2. The President did not have any supervisory power under the Act of June 18, 1878, except in the two cases named in the fifth section thereof, known as the La Abra and the Weil cases. On the hearing of the demurrer, the judgment above mentioned was entered. The opinion of the general term is reported in 5 Mackey, 428. [7 Cent. Rep. 341.]

We are of the opinion that the demurrer to the answer should have been overruled; that the answer showed sufficient cause for a refusal to issue the writ; and that the petition should have been dismissed.

The answer sets forth that the Secretary of State "finds it impossible, as the matter now stands, to recognize the claims and pretensions of the said White to the moieties of the said awards, without ignoring the conflicting claims and pretensions of a certain Richard H. Porter, between whom and the said White litigation in respect to the said award is now, and for a long time has been, pending;" and that he has "always been, and is now, willing to pay whatever sum or sums may be due on the said moieties, out of moneys received, under the said Treaty, from the Republic of Mexico, on an order and acquittance signed by all the rival claimants of the said moieties,"—which he "submits is as much as could be done by him without embroiling the United States in a litigation in which it has no interest whatever." This is adequate ground for a refusal on the part of the Secretary of State to pay the money in question to White. The answer alleges that the claims and pretensions of Porter to the moieties of the awards conflict with the claims and pretensions of White to the same. This is a sufficient averment that the claims of Porter are of the same character and extent with those of White. The [250] answer also avers that litigation in respect to such awards was then pending between White and Porter. This allegation necessarily implies that the litigation was in respect to the conflicting claims of the two parties to the moieties of the awards, inasmuch as the petition states that White is the assignee of one half of each of the awards. The Secretary of State, in view of such litigation, was not bound to decide between such conflicting claims, after he had notice of them and that they were in litigation, and when his decision might, perhaps,

be a different one from what that of the court would be in the litigation. The writ of mandamus is a remedy to compel the performance of a duty required by law, where the party seeking relief has no other legal remedy and the duty sought to be enforced is clear and indisputable. *Knox County* v. *Aspinwall*, 65 U. S. 24 How. 377, 383 [16: 735, 738]. Both requisites must concur in every case.

It is urged that the answer to the petition, so far as it refers to the conflicting claims of White and Porter as a ground for not recognizing the claim of White, is insufficient as a pleading. But no such ground is taken in the demurrer to the answer; and, independently of this, we think that the answer was sufficient.

We express no opinion as to the validity of the second ground of defense set up in the answer, —that the Secretary of State is not invested with authority over the moneys in question independently of the President, and that it is the opinion of the President that the public interests forbid the making of payments to White, in the condition of things set forth in the answer.

The decree of the General Term is reversed, and the case is remanded to the court below, with a direction to dismiss the petition for the writ.

---

[193] HORATIO N. WHITBECK, as Treasurer of CUYAHOGA COUNTY, OHIO, *Appt.*,

v.

MERCANTILE NATIONAL BANK OF CLEVELAND, OHIO.

(See S. C. Reporter's ed. 193-200.)

Taxation of bank shares—when illegal—deduction of debts.

1. An increase in the assessment of bank shares of 5 per centum, made by the State Board of Equalization for incorporated Banks, of Ohio,—*held* to be such a discrimination as is forbidden by section 5219 of the Revised Statutes of the United States, where the tax on other moneyed capital and personal property was made upon an estimate of 60 per cent of its cash value, and the estimate of such stock was also made at the same per cent, but was increased by such state board to 65 per cent.

2. Such state board has only power to diminish or increase the assessed value of the shares of stock so as to make them equal among themselves, and has no power of equalization of the same with other personal property.

3. In order to entitle shareholders to a deduction of their indebtedness from the assessed value of the shares of their bank stock, it is not necessary for them to make a demand for such indebtedness before the completion of the assessment, where the laws of the State make no provision for such deduction.

[No. 970.]

Argued March 20, 1888. Decided April 23, 1888.

APPEAL from a decree of the Circuit Court of the United States for the Northern District of Ohio, enjoining the collection of the part of a tax on bank shares above the assessed valuation of 60 per cent, and granting relief to shareholders of a deduction on account of their indebtedness. *Affirmed.*

The facts are stated in the opinion.

Messrs. **James Lawrence, Clarence Brown,** *David K. Watson, Atty-Gen. of Ohio,* and *Fred'k L. Geddes,* for appellant:

If a thing is limited to be done in a particular form or manner, it excludes every other mode.

Sedg. Stat. and Const. L. 31 (a); *Mercantile Bank* v. *N. Y.* 121 U. S. 138 (30: 895); *Hepburn* v. *Carlisle School Directors*, 90 U. S. 23 Wall. 480 (23: 112.)

The necessary result of the action of the State Board of Equalization was not a discrimination prohibited by the Act of Congress.

Cummings v. *Merchants Nat. Bank*, 101 U. S. 153 (25: 903); *State R. R. Tax Cases*, 92 U. S. 575 (23: 663); *Pelton* v. *Commercial Nat. Bank*, 101 U. S. 143 (25: 901); *Stanley* v. *Albany County*, 121 U. S. 535 (30: 1000); *Mercantile Bank* v. *N. Y. supra; Williams* v. *Albany County*, 122 U. S. 154 (30: 1088); *Davenport Nat. Bank* v. *Davenport Board of Equalization*, 123 U. S. 83 (31: 94); *German Nat. Bank* v. *Kimball*, 103 U. S. 732 (26: 469.)

The statute does not permit the deduction of indebtedness from moneyed capital.

Evansville Bank v. *Britton*, 105 U. S. 322 (26: 1053); *Exchange Bank* v. *Hines*, 3 Ohio St. 1.

To entitle a shareholder to a deduction of his individual indebtedness from the value of his stock, he must make the necessary affidavit and demand.

Williams v. *Weaver*, 100 U. S. 547 (25: 708); *Hills* v. *Exchange Bank*, 105 U. S. 319 (26: 1052); *Albany County* v. *Stanley*, Id. 305 (26: 1044); *Stanley* v. *Albany County*, 121 U. S. 535 (30: 1000.)

The county auditor had no authority to correct the tax.

State v. *Montgomery County*, 31 Ohio St. 271, *Ins. Co.* v. *Capellar*, 38 Ohio St. 560; *Butler* v. *Hamilton County*, 39 Ohio St. 168.

Messrs. **W. W. Boynton** and **John C. Hale,** for appellee:

The rate of taxation involves both the valuation placed on the property and the percentage of assessment on that valuation.

People v. *Weaver*, 100 U. S. 539 (25: 705); *Pelton* v. *Commercial Nat. Bank*, 101 U. S. 143 (25: 901); *Stanley* v. *Albany County*, 121 U. S. 542 (30: 1001); *Boyer* v. *Boyer*, 113 U. S. 694 (28. 1090.)

The shares of the appellees are valued higher than other moneyed capital in the city and county where the Bank is located.

Mercantile Bank v. *N. Y* 121 U. S. 138–155 (30: 895–901); *First Nat. Bank* v. *Lucas County Treas.* 25 Fed. Rep. 759; *Pelton* v. *Commercial Nat. Bank*, 101 U S. 143 (25: 901); *Cummings* v. *Merchants Nat. Bank*, Id. 155 (25: 904).

The taxation, without permitting the shareholder to deduct the amount of his *bona fide* indebtedness, is a discrimination forbidden by the Act of Congress.

Evansville Bank v. *Britton*, 105 U. S. 322 (26: 1053); *People* v. *Weaver*, 100 U. S. 539 (25: 705); *Cummings* v. *Merchants Nat. Bank*. 101 U. S. 153 (25: 903); *Albany County* v. *Stanley*, 105 U. S. 305 (26: 1044); *Mercantile Bank* v. *N. Y.* 121 U. S. 152–157 (30: 900–902); *Stanley* v. *Albany County*, Id. 543 (30: 1001.)

The restriction in section 5209 is in harmony with Ohio cases.

Exchange Bank v. *Hines*, 3 Ohio St. 15; *Pelton* v. *Commercial Nat. Bank, supra.*

Mr. Justice **Miller** delivered the opinion of the court:

[194] This is an appeal from the Circuit Court of the United States for the Northern District of Ohio.

The Mercantile National Bank of Cleveland, Ohio, brought this suit against Horatio N. Whitbeck, the appellant here, as Treasurer of Cuyahoga County, in that State, in which the City of Cleveland is located, to restrain him from the collection of certain taxes levied upon the shares of the capital stock of that Bank. The substantial allegations of the bill are that, upon the assessment of the value of the shares of its capital stock for purposes of taxation, they were estimated at sixty-five cents on the dollar of their real value in money; while all other personal property in the City of Cleveland and County of Cuyahoga, including the moneyed capital in the hands of individual citizens of said city and county, was estimated at only sixty cents upon the same basis.

This occurred in the following manner: The auditor of Cuyahoga County, in accordance with the rules and practice adopted for the valuation of other moneyed capital of individuals, fixed the taxable value of these bank shares at 60 per centum of their true value in money, and certified and transmitted the same to the annual State Board of Equalization for incorporated banks. This board made an order increasing the valuation to 65 per centum, which latter value was certified back to the auditor and by him placed upon the tax duplicate for the year 1885. This was delivered to the defendant, the Treasurer of said County, for the collection of the taxes thereon.

Another point made by the bill was, that while the Statutes of Ohio permit the taxpayer owning moneyed capital subject to taxation to make a deduction, from the amount assessed [195] against him on account of credits, of the amount of his *bona fide* indebtedness, no such provision is made in regard to the indebtedness of any holder of bank stock. The bill sets up as affected by this proposition the names of certain shareholders of the plaintiff bank, who claim that they should be allowed this deduction for their indebtedness upon the taxable value of their bank shares.

The case was tried before the circuit and district judges, sitting together, and a certificate of a division of opinion was made, accompanied by a statement of the facts on which the difference arose. A decree was entered in accordance with the opinion of the circuit judge, enjoining the collection of the amount represented by the difference between 60 and 65 per centum of the actual value of the stock, and granting the relief asked for by the shareholders who claimed a deduction on account of their indebtedness, except as to three of them.

As regards the allegation of a discrimination against the stockholders on account of the shares held by them, caused by the increase in the assessment of 5 per centum made by the State Board of Equalization, the matter is not altogether free from difficulty; but we are of opinion that there is such a discrimination as is forbidden by section 5219 of the Revised Statutes of the United States. It is certainly true that the tax upon personal property, including the moneyed capital of private citizens, in Cuyahoga County is made upon an estimate of sixty per centum of its cash value in all cases except with regard to bank stocks, and that in regard to these the valuation is fixed upon the same basis at 65 per centum. It is probably the fact, as alleged by the counsel for the treasurer, that the state board, having these stocks under consideration, may have made a truer estimate, and may have equalized their assessed value over the entire State; but this equalization, from the very nature of the functions and powers of that body, merely has reference to bank shares as among themselves; that is to say, its purpose is to make the capital stock of all incorporated banks in the State equal in valuation for the purposes of taxation, so far as relates to their actual cash value. This board has no other power than this; it [196] has no capacity to equalize the valuation of bank shares for taxation as compared with other moneyed capital in the State. Such capital may, therefore, have a valuation very much below its real value, and even very much below the conventional rate fixed upon bank stocks by the action of this body, and that result almost necessarily follows in this case from the nature of the powers which have been conferred upon it. While it has the power, and it is made its duty, to take the valuation of bank shares, as reported to it by the auditor of Cuyahoga County, and make a comparison between it and the reports of the same character made to it by the eighty other counties in the State, it receives no such report in regard to any other moneyed capital. There is no means furnished it for the purpose of making a comparison of the proportion which the assessment sustains to the true value, as between the banks and the other moneyed capital of the State, in the different counties thereof. While it is not an absolute necessity that this method should result in a discrimination against the national banks, it is one of the probabilities, as has happened in this case, that it may produce such a result which shall be unfavorable to those institutions.

Section 2804 of the Revised Statutes of Ohio enacts that an annual county board for the equalization of the real and personal property, moneys, and credits in each county, exclusive of cities of the first and second class, shall be composed of the county commissioners and county auditor, who shall meet at the office of the latter in each county on the Wednesday after the third Monday in May, annually. It is provided that this board shall have power to hear complaints and to equalize the valuation of all real and personal property, moneys, and credits within the county. It is under this statute that the assessment was made which the auditor certified to the State Board of Equalization. No complaint has been made that this assessment upon the capital shares of the plaintiff bank was in any wise unequal as regards the assessment upon other moneyed capital.

The organization and method of proceeding of the State Board of Equalization for incor- [197] porated banks is provided for in the following sections of the Revised Statutes of Ohio, 1880:

"Sec. 2808. (As re-enacted March 9, 1883; 80 Ohio Laws, 55.) The governor, auditor of State, and attorney-general shall constitute a board for the equalization of the shares of incorporated banks, and for this purpose they shall meet on the third Tuesday of June, annually, at the office of the auditor of State, and examine the

returns of said banks to the county auditors, and the value of said shares as fixed by the county auditors, as the same shall have been reported by the county auditors to the State auditor.

"Sec. 2809. (As amended March 9, 1883; 80 Ohio Laws, 55.) Said board shall hear complaints and equalize the value of said shares according to the rules prescribed by this title for valuing and equalizing the values of real and personal property; and if in the judgment of the board, or a majority of them, the aggregate value of all the bank property so reported to said board by the county auditors is below its true value in money, they may increase or diminish the value of said shares by such a per cent as will equalize said shares to their true value in money; provided, that said board shall not increase or reduce the grand aggregate value of bank shares, as returned by the several county auditors, by more than twenty (20) per centum."

It is obvious from these two sections that the only power of this board is to diminish or increase the assessed value of the shares of stock by such a per centum as will make them equal among themselves, and that there is no power of equalization so far as other personal property is concerned or in comparison with other moneyed capital in the hands of individuals. The language directing the board to proceed "according to the rules prescribed by this title for valuing and equalizing the values of real and personal property" does not authorize a comparison of the value of bank shares with that of real and personal property, but is only intended to have regard to the mode of procedure, such as laying before that body the reports of the county auditors, hearing complaints, and equalizing the assessments as between the [198] the shares of the different banks. Therefore in the order by which it equalized the various bank shares as among themselves, from all over the State, and certified this increase of 5 per centum upon the assessment to the auditor of Cuyahoga County, it had no purpose to change or to equalize the assessment in its relation to other moneyed capital of the State, of the City of Cleveland, or of the County of Cuyahoga.

It is said, however, that the standard of comparison required by the Act of Congress is the assessment of all the banks in the State with that upon moneyed capital all over the State, and that there is no evidence presented in this suit that there was any discrimination against the Bank if the standard of comparison here suggested is the one which should govern. There is evidence that the rule which was adopted by the Board of Equalization of Cuyahoga County, of fixing the assessment at 60 per centum of the cash value of the property, prevailed in eleven other counties of the State. It is also a fact that in regard to those counties the discrimination against the national banks, as compared with other moneyed capital, is established.

This alone would be sufficient to establish a discrimination as to 23.6 mills out of the entire rate of 26 mills on the dollar of valuation; it being found as a matter of fact that 26 mills was the entire tax levied upon all the property in the County of Cuyahoga under this assessment, of which the amount of 23.6 mills was exclusively devoted to county and city purposes, and but 2.4 mills was levied for state purposes.

While it might, perhaps, be plausibly said that in regard to taxation for state purposes, the rule of comparison should include the whole State, it is equally clear that for the much larger proportion of tax levied for county and city purposes the assessment upon the moneyed capital of the citizens in such county and city should furnish the standard by which the inequality of taxation should be determined.

As it has already been shown that the board for the equalization of the shares of incorporated banks had neither the authority nor the means to establish and equalize the assessment of the shares of all the banks of the State with the other moneyed capital of the State, we do not very well see how the oral testimony of [199] witnesses offered to establish this uniformity of assessment could do so; and if it could, how it was competent to do it in the face of the fact that the board had no such power.

In regard to the deduction of their *bona fide* indebtedness, claimed on the part of certain owners of shares in the plaintiff bank from the assessment levied upon such shares, the court finds that no demand was made therefor, "either by the complainant or by any of its shareholders, until the 17th day of December, A. D. 1885, a date prior to the commencement of this action, at which time the entire process of the appraisement and equalization of the value of said shares for taxation had been completed, and the tax duplicate for said year had been delivered in accordance with law to the Treasurer of said County, for the collection of said taxes; but the laws of Ohio make no provisions for the deduction of the *bona fide* indebtedness of any shareholder from the shares of his stock, and provide no means by which said deduction can be secured."

Under the decision in *Hills* v. *Exchange Bank*, 105 U. S. 319 [26: 1052], we are of opinion that the Bank was entitled to relief in the cases of all the shareholders named in the bill (except James A. Barnett, Robert L. Chamberlain, and James Parmalee), and that the fact that they did not make an earlier demand for the deduction of their indebtedness from the assessed value of the shares of their bank stock does not defeat their right to have it made by this bill in chancery, for the reason that the court expressly finds that "the laws of Ohio make no provision for the deduction of the *bona fide* indebtedness of any shareholder from the shares of his stock and provide no means by which said deduction can be secured."

This was precisely the case in regard to *Hills* v. *Exchange Bank*, in which the court said: "We are of opinion that, considering the decision of the Court of Appeals of New York, the action of the assessors in the case of Williams, and their own testimony in this case, it is entirely clear that all affidavits and demands for deduction which could and might have been made would have been disregarded and unavailing, and that the assessors had a fixed purpose, generally known to all persons interested, [200] that no deduction for debts would be made in the valuation of bank shares for taxation. It is, therefore, not now essential to show such an offer, when it is established that there were debts to be deducted, and when the matter is still *in fieri*, the tax being unpaid."

In regard to all of the shareholders claiming this deduction, except Barnett, Chamberlain,

and Parmalee, the court finds that the allegations of the bill are true, but that as to them they are untrue. It therefore granted relief by the injunction as to all of them except these three, as to which it was denied. It is to be observed, however, that the Bank takes no appeal from the part of the decree denying relief to these three shareholders.

These principles require the affirmance of the decree of the circuit court; and while there will be found in them a sufficient answer to the questions certified by the judges of that court, we do not think it necessary to make a more specific answer to each of them.

The decree is affirmed.

---

[338] UNITED STATES, *Appt.*,
v.
CHARLES W. BEEBE ET AL.

(See S. C. Reporter's ed. 338-348.)

Power of attorney-general—defenses of Statute of Limitations and laches.

1. The attorney-general may institute a suit in the name of the United States to set aside a patent obtained from it by fraud or mistake.

2. In cases where the Government, although a nominal plaintiff, has no real interest in the litigation, but has allowed its name to be used therein for the sole benefit of a private person, the defenses of laches and the Statute of Limitation are available, the same as in suits between private individuals.

[No. 180.]

Argued Feb. 10, 13, 1888. Decided April 30, 1888.

APPEAL from a decree of the Circuit Court of the United States for the Eastern District of Arkansas, sustaining a demurrer and dismissing an action to set aside patents for land. *Affirmed.*

Statement by *Mr. Justice* **Lamar:**

This is a suit in equity brought by the attorney-general on behalf of the United States to set aside and cancel certain patents issued in favor of Roswell Beebe, in 1838 and 1839, for about 480 acres of land upon which the present City of Little Rock, Arkansas, is partly built. Roswell Beebe having died many years ago, this suit is prosecuted against his heirs and legal representatives. It was brought in the United States Circuit Court for the Eastern District of Arkansas, the bill having been filed on the 31st of January, 1883. The ground upon which it is asked that said patents may be set aside and canceled is, that at the date of their issue, and for a long time prior thereto, the United States did not own the land embraced in them, but that, on the contrary, said land was legally appropriated by other persons, and was therefore segregated from the public domain; that said Roswell Beebe and others fraudulently conspired together for the purpose of securing said patents, and by false representations, pretenses, and undue influence persuaded and "coerced the register" of the United States Land Office at Little Rock into the belief that he (Beebe) was entitled to said patents, etc.; and that by reason of said premises said patents are fraudulent and void.

[339]

The bill sets out at considerable length and with much regard to details a great array of alleged facts connected with the issue of said patents, the former appropriation of the land, and the alleged fraudulent acts and practices of said Beebe with reference to said land. In substance they are as follows: That said lands were formerly a part of the Quapaw Indian reservation, but were ceded to the United States by the Treaty of August 24, 1818, and thereby became part of the public domain; that afterwards, to wit, in 1819 and 1820, they, with other lands not involved in this controversy, were located with what is known as "New Madrid Certificates" issued by the recorder of land titles at St. Louis in November, 1815, under and in accordance with the provisions of the Act of Congress approved February 17, 1815, entitled "An Act for the Relief of the Inhabitants of the Late County of New Madrid, in the Missouri Territory, Who Suffered by Earthquakes," 3 Stat. at L. 211; that by virtue of said locations all of said lands were surveyed, and the surveys were returned to the recorder on the 17th of October, 1820, whereby said lands became legally appropriated by the holders and owners of said certificates, and thus severed from the mass of the public domain; that the equitable title to said lands thus became vested in the locators of said certificates and their assigns, and was afterwards, by proper assignments and conveyances, transferred to and became vested in one W. M. O'Hara, who subsequently conveyed the lands in undivided moieties to Nathaniel Philbrook and Chester Ashley; that in 1824 said Philbrook died intestate, seised and possessed of an undivided half interest in said lands held under the title aforesaid, and the same descended to his father, Eliphalet Philbrook, a citizen of New Hampshire and his sole heir at law, who, dying in 1828, by last will and testament devised all his interest in and to said lands to Thomas H. Ellison and six of his other children and grandchildren; that said devisees and heirs of such as are deceased have, by proper deeds, conveyed said lands to George V Dietrich, Jabez C. Hurst, citizens of Galesburg, Illinois, and John F. Calder, a citizen of Troy, New York, in trust to apply for and obtain patents thereto from the United States; that said trustees applied to the United States recorder of land titles at St. Louis, Missouri, for patent certificates in support of said original "New Madrid" locations, and, on the 10th day of September, 1875, that officer issued such certificates in the names of the original locators and their legal representatives for said lands, as he was authorized to do by the said Act of February 17, 1815; that afterwards said trustees made application for patents for said lands to the proper United States authorities, but that such patents were refused because of the existence of the outstanding patents issued to said Beebe as aforesaid; that from the time of said locations, surveys, and returns in 1819 and 1820, up until the issuance of the Beebe patents in 1838 and 1839, the said New Madrid locations were the only titles to said lands, and under them the Town of Little Rock was laid out and built on said lands, was duly incorporated, and contained hundreds of inhabitants prior to and at the time when said patents were issued; that said Beebe patents were issued on

[340]

certain preemption float claims, all located about the year 1838, under the provisions of the second section of the Preemption Act of May 29, 1830, and the Amendatory Act of July 14, 1832, 4 Stat. at L. 420, 603, but that such preemption locations were fraudulent and void, because the lands had already been appropriated by the New Madrid certificates, were at that time occupied and improved by actual settlers, and were consequently not subject to preemption; that said Beebe never procured the consent of said settlers to the location of said preemption floats and the issue of said patents, as required and provided by the said preemption Acts and the regulations of the General Land Office, but, on the contrary, imposed upon the officers of the Land Department, and induced them to believe that he had complied with the law and the regulations in every respect, when in fact his every act in procuring said patents was done in violation of law and [341] was part of a conspiracy to defraud the United States and the holders under said New Madrid locations, and that in furtherance of said conspiracy said Beebe entered into a so-called bond to convey to the original holders and claimants of said lands the title which he was to and did acquire by the issue of said patents on said float claims, which he afterwards fraudulently failed and refused to do, all of which was fraud on the United States and other claimants to, and settlers upon, said lands; that all defects of the said New Madrid Act and of the locations thereunder have been cured by subsequent Acts of Congress and the opinions of the attorney-general and decisions of the Department, and by decisions of the Supreme Court of the United States construing the same; and that said locations of said floats and the issuance of said Beebe patents were allowed under a misconception of the law, procured by undue means and in violation of the law, and the same are null and void, and ought in equity and good conscience to be canceled.

The defenses relied on in the court below, by way of demurrers and pleas, were (1) the want of authority in the attorney-general to file a bill for the annulment of a patent in a case like the present; (2) that the claim is barred by the Statute of Limitations; (3) that the claim sued upon is stale; (4) that the plaintiff has no equity to maintain this suit; and that all this appears upon the face of the bill itself. The demurrer to the bill was sustained, and the bill dismissed, from which decree of dismissal an appeal on behalf of the United States brings this case here.

Mr. **Henry M. Baker,** for appellant:

At the time the selections, sales, and confirmations were made, and patents issued whose cancellation is asked, said lands were all appropriated by the location, surveys, and returns thereof with said New Madrid certificates.

Stoddard v. *Chambers*, 43 U. S. 2 How. 284 (11: 269); *Barry* v. *Gamble*, 44 U. S. 3 How. 32 (11: 479); *Lessieur* v. *Price*, 53 U. S. 12 How. 59 (13: 893); *Hale* v. *Gaines*, 63 U. S. 22 How. 144 (16: 264); *Witherspoon* v. *Duncan*, 71 U. S. 4 Wall. 218 (18: 342); *Rector* v. *Ashley*, 73 U. S. 6 Wall. 142 (18: 733); *Hot Springs Cases*, 92 U. S. 698, 713 (23: 690, 696).

All patents and certificates for lands so appropriated are void.

Cunningham v. *Ashley*, 55 U. S. 14 How. 377 (14: 462) and cases above cited; *Reichart* v. *Felps*, 73 U. S. 6 Wall. 160 (18: 849); *Atherton* v. *Fowler*, 96 U. S. 513 (24: 732).

The law forbids a second patent until the first be canceled.

Bissell v. *Penrose*, 49 U. S. 8 How. 317 (12: 1095); *Doswell* v. *De la Lanzo*, 61 U. S. 20 How. 29 (15: 824); *Moore* v. *Robbins*, 96 U. S. 530 (24: 848); *Wirth* v. *Branson*, 98 U. S. 118 (25: 86).

It is the duty of the United States to seek to annul and vacate those instruments.

U. S. v. *Hughes*, 52 U. S. 11 How. 552–568 (13: 809–816); *U. S.* v. *Stone*, 69 U. S. 2 Wall. 525 (17: 765); *Hughes* v. *U. S.* 71 U. S. 4 Wall. 232–236 (18: 303, 304); 4 Ops. Attys-Gen. 149.

The proper course to be taken to set aside the fraudulent patents and titles is the course now adopted by the United States.

Garland v. *Wynn*, 61 U. S. 20 How. 6 (15: 801); *Lytle* v. *Arkansas*, 68 U. S. 22 How. 193 (16: 306); *Lindsey* v. *Hawes*, 67 U. S. 2 Black, 559 (17: 267); *Minnesota* v. *Batchelder*, 68 U. S. 1 Wall. 109 (17: 551); *Stark* v. *Starr*, 73 U. S. 6 Wall. 402 (18: 925); *Johnson* v. *Towsley*, 80 U. S. 13 Wall. 72 (20: 485); *Samson* v. *Smiley*, Id. 91 (20: 489); *Moore* v. *Robbins*, *supra*.

The decision of the land offices in issuing a land patent is not conclusive.

Johnson v. *Towsley*, *supra*; *Shepley* v. *Cowan*, 91 U. S. 330 (23: 424); *Moore* v. *Robbins*, *supra*; *Marquez* v. *Frisbie*, 101 U. S. 473 (25: 800); *Steel* v. *St. Louis Smelting & Ref. Co.* 106 U. S. 454 (27: 229).

The United States are not bound by any Statutes of Limitations not imposed by Congress, and laches cannot be imputed to the Government.

U. S. v. *Kirkpatrick*, 22 U. S. 9 Wheat. 720 (6: 199); *Smith* v. *U. S.* 30 U. S. 5 Pet. 292 (8: 130); *Burgess* v. *Gray*, 57 U. S. 16 How. 48 (14: 839); *Gibson* v. *Chouteau*, 80 U. S. 13 Wall. 92 (20: 534); *Gaussen* v. *U. S.* 97 U. S. 584 (24: 1009); *U. S.* v. *Thompson*, 98 U. S. 486 (25: 194); *U. S.* v. *Hoar*, 2 Mason, 312; *U. S.* v. *Williams*, 5 McLean, 133; *Swearingen* v. *U. S.* 11 Gill. & J. 373; *U. S.* v. *Southern Colorado Coal & Town Co.* 5 McCrary, 572.

Messrs. **U. M. Rose** and *S. W. Williams*, for appellees:

It does not appear that the suit was prosecuted by the attorney-general.

U. S. v. *Flint*, 4 Sawy. 83; *U. S.* v. *Throckmorton*, 98 U. S. 70 (25: 96).

The attorney-general has no right to file the bill.

U. S. v. *Minor*, 114 U. S. 243 (29: 114); *Moore* v. *Robbins*, 96 U. S. 530 (24: 848); *U. S.* *Schurz*, 102 U. S. 404 (26: 174); *Silver* v. *Ladd*, 74 U. S. 7 Wall. 228 (19: 141); *Steel* v. *St. Louis Smelting & Ref. Co.* 106 U. S. 454 (27: 229); *Mowry* v. *Whitney*, 81 U. S. 14 Wall. 440 (20: 859).

In *Mahn* v. *Harwood*, 112 U. S. 365 (28: 669), the court said that a patent can only be avoided by a direct proceeding.

The decision of the land officers on a matter within their jurisdiction is of the same force and efficacy as a judgment of a court.

Steel v. *St. Louis Smelting & Ref. Co.* 106 U. S. 447 (27: 226); *Moore* v. *Robbins*, 96 U. S. 532 (24: 849); *Lyne* v. *Bank of Kentucky*, 5 J. J. Marsh.

562; *Vance* v. *Burbank*, 101 U. S. 514 (25: 929); *U. S.* v. *Schurz*, 102 U. S. 401 (26: 173); *Quinby* v. *Conlan*, 104 U. S. 426 (26: 802); *Marquez* v. *Frisbie*, 101 U. S. 476 (25: 801); *Lansdale* v. *Daniels*, 100 U. S. 118 (25: 589.)

If the heirs of Philbrook had a valid claim they might abandon it.

House v. *Talbot*, 51 Tex. 467; *Thornton* v. *Murray*, 50 Tex. 161; *Minter* v. *Crommelin*, 59 U. S. 18 How. 87 (15: 279); *MacKay* v. *Easton*, 86 U. S. 19 Wall. 630 (22: 214); *Fremont* v. *U. S.* 58 U. S. 17 How. 542 (15: 241); *French* v. *Fyan*, 93 U. S. 172 (23: 813); *Grignon* v. *Astor*, 43 U. S. 2 How. 319 (11: 283).

The heirs of Philbrook are estopped from setting up any claim to the land.

Danley v. *Rector*, 10 Ark. 212; *Shall* v. *Biscoe*, 18 Ark. 165; *Hornor* v. *Hanks*, 22 Ark. 583; *Chapman* v. *Chapman*, 59 Pa. 214; *Cumberland Valley R. R. Co.* v. *McLanahan*, Id. 23.

The claim is barred by the Statute of Limitations and this fact appears on the face of the bill.

Where this is the case the objection may be made by demurrer.

Lansdale v. *Smith*, 106 U. S. 391 (27: 219); *Bradstreet* v. *Huntington*, 30 U. S. 5 Pet. 446 (8: 186); *Voorhees* v. *Bank of U. S.* 35 U. S. 10 Pet. 473 (9: 499); *Bryan* v. *Forsyth*, 60 U. S. 19 How. 334 (15: 674); *Cosby* v. *Buchanan*, 90 U. S. 23 Wall. 453 (23: 142).

In no courts have the Statutes of Limitation been more favorably construed than in those of the United States.

Bell v. *Morrison*, 26 U. S. 1 Pet. 360 (7: 178); *McCluny* v. *Silliman*, 28 U. S. 3 Pet. 278 (7: 678); *Hawkins* v. *Barney*, 30 U. S. 5 Pet. 466 (8: 193); *Wright* v. *Madison*, 59 U. S. 18 How. 57 (15: 283).

After such great laches, the suit will not lie.

MacKay v. *Easton*, 86 U. S. 19 Wall. 619 (22: 211); *Cunningham* v. *Ashley*, 55 U. S. 14 How. 379 (14: 463); *U. S.* v. *State Bank*, 96 U. S. 36 (24: 648); *U. S.* v. *Bostwick*, 94 U. S. 66 (24: 66); *U. S.* v. *Smith*, Id. 217 (24: 115); *The Siren*, 74 U. S. 7 Wall. 159 (19: 132); *Briggs* v. *Light-boat*, 11 Allen, 185; *U. S.* v. *Buford*, 28 U. S. 3 Pet. 12 (7: 585); *Hall* v. *Law*, 102 U. S. 465 (26: 218); *Godden* v. *Kimmell*, 99 U. S. 210 (25: 434); *Williams* v. *U. S.* 92 U. S. 461 (23: 498).

Mr. Justice **Lamar** delivered the opinion of the court:

The points involved in the pleadings and made before the court below have been presented and urged with much earnestness, both in the brief and in the oral argument of counsel.

[342] First. As to the right of the attorney-general to bring this suit.

The authority of the attorney-general, under the Constitution and laws of the United States, to institute a suit in the name of the United States to set aside a patent alleged to have been obtained by fraud or other mistake, whenever denied by a specific pleading before this court, has been uniformly maintained. And it may now be accepted as settled that the United States can properly proceed by bill in equity to have a judicial decree of nullity and an order of cancellation of a patent issued in mistake or obtained by fraud, where the Government has a direct interest, or is under an obligation respecting the relief invoked. See the opinion of the court delivered by *Mr. Justice* Miller in *United States* v. *San Jacinto Tin Company*, 125 U. S. 273 [31: 747], decided this term of the court.

Even if it had not thus been authoritatively settled, it would have been difficult, upon principle, to reach any other conclusion. The public domain is held by the Government as part of its trust. The Government is charged with the duty and clothed with the power to protect it from trespass and unlawful appropriation, and, under certain circumstances, to invest the individual citizen with the sole possession of the title which had till then been common with all the people as the beneficiaries of the trust. If a patent is wrongfully issued to one individual, which should have been issued to another, or if two patents for the same land have been issued to two different individuals, it may properly be left to the individuals to settle, by personal litigation, the question of right in which they alone are interested. But if it should come to the knowledge of the Government that a patent has been fraudulently obtained, and that such fraudulent patent, if allowed to stand, would work prejudice to the interests or rights of the United States, or prevent the Government from fulfilling an obligation incurred by it, either to the public or to an individual, which personal litigation could not remedy, there would be an occasion which would make it the duty of the Government to institute judicial proceedings to vacate such patent.

[343] In the case before us the bill avers that the patents whose cancellation is asked for were obtained by fraud and imposition on the part of the patentee, Beebe. It asserts that there exists, on the part of the United States, an obligation to issue patents to the rightful owners of the lands described in the bill; that they cannot perform this obligation until these fraudulent patents are annulled; and that they therefore bring this suit to annul these fraudulent instruments whose existence renders the United States incapable of fulfilling their said prior obligation.

The court below held that, the bill in this case having been filed on the recommendation of the Secretary of the Interior, for the declared purpose of having the questions which were being pressed upon the Land Department, in connection with the claims of the Philbrook heirs against the Government, determined by the judicial department, which claims were unsettled and important, the appeal to the court was proper. In this we think the learned judge is in full accord with the principle laid down by *Mr. Justice* Miller in the *San Jacinto Case*, and within the following language of the court in *Hughes* v. *United States*, 71 U. S. 4 Wall. 286 [18: 304], which was a suit brought in the name of the United States to set aside a patent for the benefit of a private citizen entitled to the land covered by said patent. *Mr. Justice* Field, who delivered the opinion of the court, speaking of the patent to Hughes, said: "Whether regarded in that aspect or as a void instrument, issued without authority, it *prima facie* passed the title; and therefore it was the plain duty of the United States to seek to vacate and annul the instru-

ment, to the end that their previous engagement be fulfilled by the transfer of a clear title,—the one intended for the purchaser by the Act of Congress." Unless, therefore, it appears on the face of the bill that the claim set up has no equity, or that there are valid defenses to the suit, the jurisdiction of the court to entertain it cannot be denied.

[344] Next, as to the defense of the Statute of Limitations, laches, and lapse of time.

The grounds on which the court below sustained the demurrer were (1) that, distinct from and independent of the Statute of Limitations and the laches of the public officers of the Government, the lapse of time constitutes a good defense to this suit, upon those principles of equity which would be administered as between two citizens litigating in this tribunal; and (2) that the United States is bound by the same law.

The counsel for the complainant maintain that this conclusion, upon which the decree of dismissal rests, is erroneous, and contrary to the decisions of this court and of every Circuit and District Court in the United States.

The principle that the United States are not bound by any Statute of Limitations, nor barred by any laches of their officers, however gross, in a suit brought by them as a sovereign Government to enforce a public right or to assert a public interest, is established past all controversy or doubt. *U. S.* v. *Nashville, C. & St. L. R. Co.* 118 U. S. 125 [30: 83], and cases there cited. But this case stands upon a different footing, and presents a different question. The question is, Are these defenses available to the defendant in a case where the Government, although a nominal complainant party, has no real interest in the litigation, but has allowed its name to be used therein for the sole benefit of a private person?

It has not been unusual for this court, for the purposes of justice, to determine the real parties to a suit by reference not merely to the names in which it is brought, but to the facts of the case as they appear on the record. Thus, in the case decided at this term, *Re Ayers*, 123 U. S. 492, 493 [31: 225], the court held that the State of Virginia, though not named as a party defendant, was the actual party in the controversy. *Mr. Justice* Matthews, who delivered the opinion, said: "It is, therefore, not conclusive of the principal question in this case that the State of Virginia is not named as a party defendant. Whether it is the actual party * * * must be determined by a consideration of the nature of the case as presented on the whole record." So in the cases of *New Hampshire* v. *Louisiana* and *New York* v. *Louisiana*, 108 U. S. 76 [27: 656], the court looked behind and through the nominal parties on the record to ascertain who were the real

[345] parties to the suit. *Chief Justice* Waite, in delivering the opinion of the court, used the following language: "No one can look at the pleadings and testimony in these cases without being satisfied, beyond all doubt, that they were in legal effect commenced, and are now prosecuted, solely by the owners of the bonds and coupons. * * * The bill, although signed by the attorney-general, is also signed, and was evidently drawn, by the same counsel who prosecuted the suits for the bondholders in Louisiana, and it is manifested in many ways that both the State and the Attorney-General are *only nominal actors in the proceeding*. The bondowner, whoever he may be, was the promoter and is the manager of the suit. * * * And while the suits are in the names of the States, they are under the actual control of individual citizens, and are prosecuted and carried on altogether by and for them."

In the case of *United States* v. *Nashville, C. & St. L. Railway Company, supra*, in which it was decided that the Statute of Limitations of the State of Tennessee was no defense to an action of the United States upon certain negotiable bonds held by them for public use, *Mr. Justice* Gray is careful to say: "This case does not present the question what effect the statute may have in an action on a contract in which the United States have nothing but the *formal* title, and the whole *interest* belongs to others;" and cites *Maryland* v. *Baldwin*, 112 U. S. 490 [28: 822]; *Miller* v. *State*, 38 Ala. 600.

In the former case it was held that a suit in the name of a State for the benefit of parties interested is to be regarded as a suit in the name of the party for whose benefit it is brought. *Mr. Justice* Field, delivering the opinion of the court, said: "The name of the State is used from necessity when a suit on the bond is prosecuted for the benefit of a person interested, and in such cases the real controversy is between him and the obligors on the bond;" and the case was decided upon a consideration of the merits as if the party interested was alone named as plaintiff. And he cited, approvingly, the following language in *McNutt* v. *Bland*, 43 U. S. 2 How. 9 [11: 159]: "As the instrument of the state law, his (the Governor's) name is in the bond and to the suit upon it; but in no just view * * * can he be considered a litigant party. Both look to things, not names; to the actors in controversies and suits, not to the mere forms or inactive instruments used in conducting them in virtue of some positive law." [346]

In *Miller* v. *State*, the other case cited by *Mr. Justice* Gray, the court said: "As *laches* is not to be imputed to the Government, the Statute of Limitations does not apply to the State unless it be clear from the Act that it was intended to include the State. * * * In our opinion, the rule that the Statute of Limitations does not run against the State has no application to a case like the present, when the State, though a nominal party on the record, has no real interest in the litigation, but its name is used as a means of enforcing the rights of a third party, who alone will enjoy the benefits of a recovery."

In *Moody* v. *Fleming*, 4 Ga. 115, 118, which was a case where a party was applying for a mandamus in the name of the State, the court said: "It is insisted that here the State is a party, moving the contest, and setting up a right to have this survey certified, and that the tenant will not be protected by his possession, because the Statute of Limitations does not run against the State. We have decided, and the decision is sustained by unbroken masses of authority, that the Statute of Limitations does not run against the State. The answer, however, to this argument is this: The State of Georgia is not the *real party* to the proceeding. * * * The process is *in the name* of the State, but the right asserted is a private right; the issue is between two of the citizens of the State."

Applying these principles to this case, an inspection of the record shows that the Government, though in name the complainant, is not the real contestant party to the title or property in the land in controversy. It has no interest in the suit, and has nothing to gain from the relief prayed for, and nothing to lose if the relief is denied. The bill itself was filed in the name of the United States, and signed by the attorney-general, on the petition of private individuals; and the right asserted is a private right, which might have been asserted without the intervention of the United States at all.

[347] In his letter to the United States District Attorney upon the subject, the attorney-general directs that that officer shall sign his (the attorney-general's) name to the bill, when the attorneys for the petitioners shall present such a bill, and file the same in the proper court; and that after the suit is commenced these attorneys for the petitioners will have the management of the case. Accordingly the subsequent proceedings in the case have been conducted exclusively by these attorneys, who, in the pleadings, describe themselves as attorneys for the petitioners and beneficiaries of the suit.

We are of the opinion that when the Government is a mere formal complainant in a suit, not for the purpose of asserting any public right or protecting any public interest, title, or property, but merely to form a conduit through whom one private person can conduct litigation against another private person, a court of equity will not be restrained from administering the equities existing between the real parties by any exemption of the Government designed for the protection of the rights of the United States alone. The mere use of its name in a suit for the benefit of a private suitor cannot extend its immunity as a sovereign government to said private suitor, whereby he can avoid and escape the scrutiny of a court of equity into the matters pleaded against him by the other party, nor stop the court from examining into and deciding the case according to the principles governing courts of equity in like cases between private litigants.

These principles, so far as they relate to general Statutes of Limitation, the laches of a party, and the lapse of time, have been rendered familiar to the legal mind by the oft-repeated enunciation and enforcement of them in the decisions of this court. According to these decisions, courts of equity in general recognize and give effect to the Statute of Limitations as a defense to an equitable right, when at law it would have been properly pleaded as a bar to a legal right. They refuse to interfere to give relief when there has been gross negligence in prosecuting a claim, or where the lapse of time has been so long as to afford a clear presumption that the witnesses to the original transaction are dead, and the other means of proof have disappeared.

[348] We think the court below justly and wisely applied the principle to the case under consideration in sustaining the demurrer and dismissing the bill. The rights of the Philbrook heirs, the real parties to this case, which are set up in this bill, originated in 1815. The acts of Beebe perpetrating the alleged fraud were prior to 1838. The alleged illegal action of the Land Department occurred in 1839. More than 45 years ago, the complainants in this bill could have instituted their action. The death of the parties charged with the fraud, and also of most, if not all, of the witnesses having personal knowledge of the transaction; the fact that a city has been built upon the land in question; the occupation of large portions of it by hundreds of innocent purchasers, the homesteads of many families covering other portions of it; the uninterrupted possession maintained for more than a generation, all resting upon faith in the patent issued by the United States Government,—constitute reasons more than sufficient for the refusal of the court to set aside such patent at the suit of a party who has so long slept upon his alleged rights.

For the reasons herein stated, the decree of the court below is affirmed.

LOUIS D. DE SAUSSURE, *Plff. in Err.*, [216]
v.
PETER C. GAILLARD, Treasurer of CHARLESTON COUNTY.

(See S. C. Reporter's ed. 216-234)

Review of state judgment—federal question—jurisdiction of this court.

1. Who may sue under a state statute, and when, and under what circumstances, are questions for the exclusive determination of the state tribunals, whose judgment thereon is not subject to review by this court, unless the statute denies or injuriously affects a right claimed by a party under the Constitution or laws of the United States.
2. Where the state court based its judgment, not on a law raising a federal question, but on an independent ground, this court will not take jurisdiction of the case, even though it might think the position of the state court an unsound one.
3. To give this court jurisdiction to review a state judgment, it must appear affirmatively, not only that a federal question was presented for decision to the state court, but also that the decision of such question was necessary to the determination of the cause, and that it was actually decided, or that the judgment as rendered could not have been given without deciding it.

[No. 205.]

Argued April 4, 1888. Decided April 30, 1888.

IN ERROR to the Supreme Court of the State of South Carolina, to review a judgment of that court, affirming a judgment of the Court of Common Pleas of that State in favor of defendant, in an action to compel moneys illegally collected to be refunded. *Dismissed for want of jurisdiction.*

Reported below in 21 S. C. 560.

Statement by *Mr. Justice* **Matthews:**

The complaint in this case, filed in the Court of Common Pleas in the County of Charleston, South Carolina, alleged that the plaintiff [217] was the owner and holder of three bonds of the State of South Carolina, two, designated by the numbers 850 and 851, for $500 each, and one, by the number 2290, for $1,000; that thereby the State of South Carolina promised to pay to the bearers the sums therein named on the 1st day of July, 1893, with interest at the rate of six per cent per annum, payable semi-annually, on the 1st day of January or July of each year, on the presentation of the

proper coupons, thereto annexed, bearing the signature of the state treasurer, said coupons being receivable in payment of all taxes due the State during the year in which they mature, except for the tax levied for the public schools, the words following being indorsed on each of the said bonds, viz.: "The payment of the interest and the redemption of the principal of this bond is secured by the levy of an annual tax of two mills upon the entire taxable property of the State. The faith, credit, and funds of the State are hereby solemnly pledged for the punctual payment of the interest, and redemption of the principal, of this bond, by the Act of General Assembly approved December 22, 1873;" and upon each of said coupons was endorsed the following: "State of South Carolina. Receivable in payment of all the taxes except school tax;" that the plaintiff became the holder for value of the three bonds mentioned in the year 1878, and of all the coupons thereto annexed, including the coupon which matured on each, respectively, on the 1st day of January, 1882; that notwithstanding the contract of the State expressed in the Act of December,22, 1873, recited in said consolidation bonds, the General Assembly of South Carolina, by an Act entitled "An Act to Raise Supplies and Make Appropriations for the Fiscal Year Commencing November 1, 1881, approved February 9, 1882, has prohibited the county treasurers of the State from receiving the coupons of said bonds in payment of the taxes levied by the said Act, which last mentioned Act the plaintiff charges to be void as repugnant to article 1, section 10, of the Constitution of the United States, forbidding the States to pass any law impairing the obligation of contracts.

[218] The complaint further alleges that the defendant is the County Treasurer for Charleston County, whose duty it is to collect and receive the taxes due to the State of South Carolina upon the property situate in that county; that the plaintiff is the owner of property in said county upon which taxes were levied under the provisions of the Act to raise supplies for the fiscal year commencing November 1, 1881, in the sum of $153.86, of which sum $29.34 were levied by the said Act for the public schools; that on the 18th day of December, 1882, the plaintiff tendered to the defendant, as county treasurer, in payment of said taxes, $131.97 in cash, and the remainder, viz., $60, in the coupons of the said consolidated bonds Nos. 850, 851 and 2290, which matured on the 1st day of January, 1882; that the defendant wrongfully and illegally refused to receive the said coupons, and assigned as a reason therefor that he was forbidden so to do by the provisions of the said Act; whereupon the plaintiff paid to the defendant, under protest, the sum of $191.97 in legal tender notes of the United States, in pursuance of the provisions of an Act of the General Assembly of said State, approved the 24th of December, 1878, entitled "An Act to Facilitate the Collection of Taxes."

Plaintiff therefore demands judgment "that it be adjudged that the amount of sixty dollars in United States currency, paid by the plaintiff to the defendant on the eighteenth day of December, 1882, was wrongfully and illegally collected and ought to be refunded, and that a certificate of record thereof be issued accordingly to the plaintiff; that he have such further relief in the premises as the nature of the case may require and to the court may seem meet and proper."

The answer of the defendant sets forth the history of the legislation of the State of South Carolina on the subject, subsequent to the passage of the Act of December 22, 1873, known as the Consolidation Act, as follows:

"Defendant, further answering, alleges that, subsequent to the passage of said Act, the General Assembly of the said State, by a 'Joint Resolution to Raise a Commission to Investigate the Indebtedness of the State,' approved June 8, 1877, provided a commission to make a complete and thorough investigation of the entire [219] amount of consolidated bonds and certificates of stock which had been issued under the "Consolidation Act' aforesaid, and of the bonds, coupons and certificates of stock which had been surrendered to the state treasurer in exchange for the consolidated bonds and certificates of stock issued under said Act, and to report to the General Assembly any illegality or nonconformity to law in the issue of consolidated bonds and certificates of stock, and the grounds of the same, which commission is known as the 'bond commission.'

"That the said commission made a report to the General Assembly of the result of the investigation made by them under the joint resolution aforesaid, with schedules annexed showing the different classes of bonds and certificates of stock which had been surrendered in exchange for consolidated bonds and certificates of stock, schedule 6 showing the consolidated bonds and certificates of stock which, in the judgment of the said commission, were not issued in accordance with law and were not authorized to be consolidated under the 'Consolidation Act.'

"And thereupon the General Assembly, by a 'Joint Resolution Providing a Mode of Ascertaining the Debt of the State and of Liquidating the Same,' approved March 22, 1878, created a special court, known as the 'Court of Claims,' to hear and determine any case or cases made up or brought to test the validity of any of the consolidated bonds or certificates of stock, or of any of the various classes of bonds or certificates of stock mentioned in the said report of the 'bond commission' as not issued in accordance with law.

"It was further provided by the joint resolution aforesaid that there should be the same right of appeal from the said 'court of claims' to the Supreme Court of South Carolina as from the circuit courts of the said State, and with a right of appeal, by writ of error or otherwise as provided by law, to the Supreme Court of the United States.

"That said special court should have the same right to enter judgment, issue execution, punish for contempt, and enforce its mandates as was then possessed by the Circuit Courts of the State of South Carolina.

"That the State should be represented in [220] said special court by the attorney-general and two associate counsel to be selected by the joint vote of the General Assembly.

"That the attorney-general and his associates, with the consent of the creditors of the State, or so many of them as shall be necessary, might make up a case or cases to be heard and determined in said court, in which, if practicable, the State should be the defendant, to test the validity of the said consolidated bonds, coupons, and certificates of stock mentioned in schedule 6 of the report of the 'bond commission,' bringing before the court the various classes of vouchers which it is stated in the said report impair the validity of the said consolidated bonds, coupons, or certificates of stock, or any of them.

"The said joint resolution further provided for the levy for the current year of a tax sufficient to pay the coupons and interest orders maturing on the outstanding consolidated bonds and certificates of stock during the said fiscal year,—the interest on the consolidated bonds and certificates of stock mentioned in schedule 5 of the report of the 'bond commission' as subject to no valid objection to be paid,—and the payment of the interest on the several classes of consolidated bonds and certificates of stock mentioned in schedule 6 of said report, whenever there should be a final adjudication as to the validity of the several classes of bonds and stocks in the manner therein provided, and none other.

"That, in pursuance of the provisions of the said joint resolution, actions in which the State of South Carolina was the defendant were, with the consent of the attorney-general and his associates, brought in the said 'court of claims' on coupons of the bonds of the various classes mentioned in schedule 6 of the report of the 'bond commission.'

"That, after trial and hearing of the said causes, the said 'court of claims' rendered judgment in favor of the State.

"From the judgments of the 'court of claims,' in these several cases, appeals were taken to the Supreme Court of the State of South Carolina, as provided in the joint resolution establishing the said 'court of claims.'

[221] "That upon the hearing of the said appeals the Supreme Court of the State of South Carolina, at the April Term, 1879, in the cases entitled *Walker* v. *South Carolina*, 12 S. C. 200, and *Pelzer* v. *South Carolina*, Id., decreed and adjudged:

"First. That all the bonds issued under the 'Consolidation Act' are valid obligations of the State of South Carolina, except as follows:

"1. Such as were issued in exchange for bonds issued under the Act entitled 'An Act to Authorize a Loan for the Relief of the Treasury,' approved February 17, 1869, or for the coupons of such bonds; the said Act being repugnant to section 7, article IX, of the Constitution of the State of South Carolina, in that it purports to create a debt which was not 'for the purpose of defraying extraordinary expenditures,' and the debt sought to be created not being 'for some single object,' and such object not being 'distinctly specified therein,' as required by the said section and article of the Constitution.

"2. Such as were issued in exchange for the second issue of bonds under an Act entitled 'An Act to Authorize a State Loan to Pay Interest on the Public Debt,' and which were indorsed 'Issued under Act approved August 26, 1868,' or the coupons of such bonds; the said bonds and coupons being absolutely void, even in the hands of *bona fide* holders, because issued without any authority whatever.

"3. Such as were issued in exchange for those conversion bonds which were issued in exchange for either of the bonds or coupons of the two classes mentioned.

"Second. That if any consolidated bond rests wholly upon any of the three objectionable classes of bonds therein mentioned, then it is wholly void; but if it rests only in part upon such objectionable bonds and coupons, then it is void only to the extent which it does rest upon such objectionable bonds or coupons, and for the balance it is a valid obligation of the State.

"Third. That the burden of proof is upon the State to show that any particular bond which may be brought into question does rest [222] either in whole or in part upon such objectionable bonds and coupons; and if in part only, then the State must show what part is so affected.

"III. Defendant further alleges that by an Act entitled 'An Act to Provide for the Settlement of the Consolidated Debt of the State in Accordance with the Decision of the Supreme Court of the State of South Carolina,' approved December 23, 1879, after reciting the legislation and the decision of the Supreme Court of the State of South Carolina in relation to the consolidated debt of the State, hereinbefore set forth, and that it is to the interest of the State and her creditors that the principles established in the said decision of the supreme court should be accepted as final, and forthwith applied in the elimination from the consolidated debt of the State of all invalid material,—a special commissioner was appointed to ascertain and establish the exact percentage and amount of the invalidity of each and every consolidated bond and certificate of stock of the state consolidated debt, and of the interest thereon, in accordance with the principles laid down in the said decision of the Supreme Court of the State.

"And it was therein further provided that the said special commissioner should, at least once in each month during the period of said ascertainment, make a detailed report to the state treasurer, setting forth therein by their numbers the consolidated bonds, coupons, certificates of stock, and interest orders investigated by him during the previous month; also, whether the same, under the decision of the supreme court aforesaid, be wholly valid or only partially valid, and, where only partially valid, in each case he should also set forth the exact percentage, amount, and character of the invalidity; that he should continue to make such detailed reports to the state treasurer until he should have investigated and reported upon the entire consolidated debt of the State.

"It was further therein provided that every holder of any consolidated bond or certificate of stock, or of the interest thereon reported by said special commissioner as partially invalid, shall have the right to surrender to the state treasurer for cancellation such bonds, certificates of stock, and interest; and upon such sur- [223] render and cancellation he shall be entitled to receive from the state treasurer, who is au-

thorized and required to issue the same, a new bond or certificate of stock equal in amount to the exact amount of the valid portion of such bond, certificate of stock, coupon, or interest order; such new bonds and certificates of stock to be in all respects similar and of like validity to, and having the same benefits and privileges as, those provided for in the 'Consolidation Act,' approved 22d December, 1873, saving and except that the first coupon or interest to mature thereon shall mature on the 1st of January, 1879, and the same rights and privileges are likewise given to the holders of detached coupons and interest orders.

"And it was further thereby declared 'that the bonds and stocks reported by the special commissioner as valid, and the portions of the bonds and stocks also reported by him as valid, but exchanged by their holders, as hereinbefore provided, for new consolidated bonds or stocks, are hereby declared to be valid and unquestioned obligations of the State.' And the bonds and stocks so declared to be unquestionable obligations of the State are designated and known as 'brown consols.'

"That the special commissioner appointed under the Act aforesaid did perform the duties required of him by said Act, and did make to the state treasurer from time to time the report of his investigations until he had investigated and reported upon the entire consolidated debt of the State, as required by the said Act, which reports of the said special commissioner remain in the office of the state treasurer.

"That by an Act entitled 'An Act to Extend the Time for Funding the Unquestionable Debt of the State,' approved December 24, 1880, the comptroller-general of the State is required to examine into the character and material of all consolidated bonds and certificates of stock of the State issued since the first day of January, 1866, together with the coupons and interest orders thereon, which may be presented to him for this purpose by the holders thereof, and to report to the state treasurer how the said bonds, certificates of stock, coupons, and interest [224] orders are affected by the decision of the Supreme Court of the State hereinbefore stated, and the exact percentage of invalidity in the material reported upon as established by the said decision.

"And the state treasurer is authorized and required, in lieu of the bonds, stocks, coupons, and interest orders so surrendered, to issue consolidated bonds and certificates of stock for fifty per cent of the face value of the valid material surrendered.

"That the State has since provided for the levy of an annual tax upon the taxable property of the State and for the payment by the state treasurer, from the proceeds of said tax, of the interest on the entire consolidated debt of the State, ascertained and reported by the special commissioner aforesaid to be valid, in accordance with the decision of the supreme court aforesaid, and also upon such portions of the same as shall have been ascertained and reported by said special commissioner to be valid and justly due by the State, as the same shall appear from the certificates of the said special commissioner filed in the office of the state treasurer.

"That by joint resolution approved 9th February, 1882, it was resolved as follows:

"Whereas the consol bonds bear upon their face the contract of the State to receive the coupons of the same for taxes; and

"Whereas, from the fact that the green consols outstanding are more or less tainted with invalidity, varying with each security (which has been established by the courts and acquiesced in by the holder), the coupons from this class of bonds cannot be received by the tax collector, but can only be paid at the state treasury, where access to the registry permits the amount of invalidity in each coupon to be ascertained: Now, therefore, in order to hasten the process now going on of the conversion of green consols into brown consols, which latter represent the unquestioned consol debt of the State, and the coupons from which are now being received in payment for taxes:

"*Be it resolved*, That on and after the first day of January, eighteen hundred and eighty-three, the interest upon the green consol bonds [225] and stocks of the State shall not be paid at the treasury until said securities have been converted into brown consol bonds and stocks."

The answer then proceeds to set forth the particulars in which it is claimed that the consolidated bonds described in the complaint are not valid obligations of the State of South Carolina, and further alleges "that the holders of the bonds Nos. 850,851, and 2290 mentioned in the complaint did not bring the same before the special 'court of claims,' and that they have never surrendered the same to the commissioner or the comptroller-general or the state treasurer to ascertain and establish the exact percentage and amount of the invalidity of the said bonds in accordance with the principles laid down in the decision of the Supreme Court of the State of South Carolina aforesaid, as provided by law, and have never received new consolidated bonds or certificates of stock equal in amount to the valid portion of said bonds, as provided by law, known as 'brown consols.'"

The answer further alleges that the Act entitled "An Act to Raise Supplies and Make Appropriations for the Fiscal Year Commencing November 1, 1881," approved February 9, 1882, "provides that all taxes assessed and payable under the said Act shall be paid in the following kinds of funds, and no other: Gold and silver coin, United States currency, national bank notes, and coupons which shall become payable during the year 1882 on the valid consolidated bonds of the State known as 'brown consols:' Provided, however, the jury certificates and the *per diem* of state witnesses in the circuit courts shall be received for county taxes, not including school taxes;" and the defendant admits, and justifies under the terms of said Act, his refusal, as County Treasurer of Charleston County, to receive the coupons tendered by the plaintiff in payment of taxes.

The cause came on for trial before a jury, who, under the instructions of the court to that effect, found a verdict for the defendant, on which judgment was accordingly rendered. On appeal to the Supreme Court of the State this judgment was affirmed. To review that judgment the present writ of error has been sued out.

Messrs. Samuel Lord, Clarence A. Seward and *T. M. Mordecai*, for plaintiff in error.

The Act under which these bonds were issued is constitutional.

Morton v. *Comptroller-General*, 4 S. C. 430, *Bond Debt Cases*, 12 S. C. 200; *Whaley* v. *Gaillard*, 21 S. C. 560.

Recital, in a municipal bond, of facts which the corporate officers had authority by law to determine and to certify estops the corporation from denying those facts; but a recital therein of facts which the corporate officer had no authority to determine does not estop the corporation.

Dixon County v. *Field*, 111 U. S. 83 (28:360); *Walnut* v. *Wade*, 103 U. S. 694 (26: 530), *Buchanan* v. *Litchfield*, 102 U. S. 289 (26; 139).

The existence of extraordinary expenditures, and the need for defraying them, were within the exclusive knowledge of the Legislature, and within its exclusive judgment. This judgment, when expressed, is final.

Lynde v. *Winnebago County*, 83 U. S. 16 Wall. 13 (21:274); *Marcy* v. *Oswego Twp.* 92 U. S. 637 (23:748); *Johnson County* v. *January*, 94 U. S. 205 (24:111).

The Consolidation Act was a compromise between the State and every person holding her bonds and certificates, whereby each party settled forever all questions affecting the rights of each other; and neither in equity nor law could this compromise be reviewed.

Louisiana v. *Pilsbury*, 105 U. S. 278 (26:1090); Story, Cont. § 449; Story, Eq. Jur. 129-131, and cases cited; *Stewart* v. *Stewart*, 6 Clark & F 911; *Stapilton* v. *Stapilton*, 1 Atk. 10; *Gibbons* v. *Caunt*, 4 Ves. Jr. 840; *Union Bank* v. *Geary*, 30 U. S. 5 Pet. 99 (8:60); *Barlow* v. *Ocean Ins. Co.* 4 Met. 270; *Durham* v. *Wadlington*, 2 Strobh. Eq. 258; *Lost Bond Cases*, 15 S. C. 232; *Jasper County* v. *Ballou*, 103 U. S. 745 (26:422).

Mr. **Joseph H. Earle**, *Atty-Gen. of South Carolina*, for defendant in error:

A sovereign State cannot be sued in its own courts except by its consent.

Memphis & C. R. R. Co. v. *Tennessee*, 101 U. S. 337 (25:960); *South & N. Ala. R. R. Co.* v. *Alabama*, Id. 835 (25:973).

Changes in the form of action and modes of proceeding do not amount to an impairment of the obligation of a contract, if an adequate and efficacious remedy is left.

Mason v. *Haile*, 25 U. S. 12 Wheat. 370 (6:660) *Bronson* v. *Kinzie*, 42 U. S. 1 How. 311 (11:143); *Von Hoffman* v. *Quincy*, 71 U. S. 4 Wall. 535 (18:403); *Drehman* v. *Stifle*, 75 U. S. 8 Wall. 595 (19:508); *Gunn* v. *Barry*, 83 U. S. 15 Wall. 611 (21:212); *Walker* v. *Whitehead*, 83 U. S. 16 Wall. 314 (21:357); *Terry* v. *Anderson*, 95 U. S. 628 (24:365); *Tennessee* v. *Sneed*, 96 U. S. 69 (24:610); *Louisiana* v. *Pilsbury*, 105 U. S. 278 (26:1090).

The Act entitled "An Act to Facilitate the Collection of Taxes", approved Dec. 24, 1878, 16 Stat. 785, does not authorize the plaintiff in error to bring this suit.

The vouchers upon which the consolidation bonds above mentioned were based were not valid debts of the State.

Cooley, Const. Lim. 143, *Fletcher* v. *Peck*, 10 U. S. 6 Cranch, 128 (3:175).

The established settled construction given by the highest court of a State of the laws and Constitution of that State, must be deemed in all cases binding upon the courts of the Union.

Elmendorf v. *Taylor*, 23 U. S. 10 Wheat. 153 (6:289); *Pease* v. *Peck*, 59 U. S. 18 How. 595 (15:518); *Sumner* v. *Hicks*, 67 U. S. 2 Black, 532 (17:355); *South Ottawa* v. *Perkins*, 94 U. S. 260 (24:154); *Douglass* v. *Pike County*, 101 U. S. 677 (25:968); *New Buffalo Twp.* v. *Cambria Iron Co.* 105 U. S. 73 (26:1024); *Taylor* v. *Ypsilanti*, Id. 60 (26:1008); *Green County* v. *Conness*, 109 U. S. 104 (27:872); *Louisiana* v. *Pilsbury*, 105 U. S. 294 (26:1095); *Dallas County* v. *McKenzie*, 110 U. S. 686 (28:285).

The decision of the Supreme Court of South Carolina upon these points does not present a federal question.

Nesmith v. *Sheldon*, 48 U. S. 7 How. 818 (12: 927); *Fairfield* v. *Gallatin County*, 100 U. S. 47 (25: 544); *Randall* v. *Brigham*, 74 U. S. 7 Wall. 523 (19:285); *South Ottawa* v. *Perkins*, 94 U. S. 261 (24:154); *Post* v. *Kendall County*, 105 U. S. 667 (26:1204); *Elmwood Twp.* v. *Marcy*, 92 U. S. 294 (23:713); *Adams County* v. *Burlington & M. R. R. Co.* 112 U. S. 123 (28: 678); *Brown* v. *Atwell*, 92 U. S. 327 (23: 511); *Murdock* v. *Memphis*, 87 U. S. 20 Wall. 590 (22:429); *Moore* v. *Mississippi*, 88 U. S. 21 Wall. 636 (22:653) *Bolling* v. *Lersner*, 91 U. S. 594 (23:366); *Detroit City R. Co.* v. *Guthard*, 114 U. S. 134 (29:118); *Otis* v. *Oregon Steamship Co.* 116 U. S. 548 (29:719); *Jacks* v. *Helena*, 115 U. S. 288 (29:392); *Jenkins* v. *Loewenthal*, 110 U. S. 222 (28:129).

Mr. Justice **Matthews** delivered the opinion of the court: [226]

This action is not brought against the defendant in his individual capacity for a trespass or wrong alleged to have been committed by him as a natural person upon the property or personal rights of the plaintiff; it is brought against him in his official capacity as Treasurer of the County of Charleston, to recover judgment for a sum of money voluntarily paid by the plaintiff, though under protest; demanded and received by the defendant in his official capacity, contrary, as the plaintiff alleges, to law. The judgment sought is not a personal judgment against the defendant, but for a judicial declaration that the money paid was wrongfully and illegally collected, and ought to be refunded in order that a certificate of record thereof may be issued accordingly, to the end that the amount might be repaid out of the state treasury.

The action is founded expressly on the provisions of the Act of the General Assembly of the State of South Carolina, approved December 24, 1878, entitled "An Act to Facilitate the Collection of Taxes." The first section of that Act provides: "That in all cases in which any State, county, or other taxes are now or shall hereafter be charged upon the books of any county treasurer of the State against any person, and such treasurer shall claim the payment of the taxes so charged or shall take any step or proceeding to collect the same, the person against whom such taxes are charged or against whom such step or proceeding shall be taken shall, if he conceives the same to be unjust or illegal for any cause, pay the said taxes notwithstanding, under protest, in such funds and

moneys as the said county treasurer shall be authorized to receive by the Act of the General [227] Assembly levying the same; and, upon such payment being made, the said county treasurer shall pay the taxes so collected into the state treasury, giving notice at the time to the comptroller-general that the payment was made under protest; and the person so paying said taxes may at any time within thirty days after making such payment, but not afterwards, bring an action against the said county treasurer for the recovery thereof in the court of common pleas for the county in which such taxes are payable; and if it be determined in said action that such taxes were wrongfully or illegally collected, for any reason going to the merits, then the court before whom the case is tried shall certify of record that the same were wrongfully collected and ought to be refunded, and thereupon the comptroller-general shall issue his warrant for the refunding of the taxes so paid, which shall be paid in preference to other claims against the treasury: *Provided*, That the county treasurers shall be required to receive jury and witness tickets for attendance upon the circuit courts of the State receivable for taxes due the county in which the said services are rendered."

The second section of the Act prohibits any other remedy "in any case of the illegal or wrongful collection of taxes or attempt to collect taxes, or attempt to collect taxes in funds or moneys which the county treasurer shall be authorized to receive under the Act of the General Assembly levying the same, being other than such as the person charged with said taxes may tender or claim the right to pay, than that provided in section 1 of this Act." It expressly provides that "no writ of mandamus shall be granted or issued from any court, or by the judge of any court, directing or compelling the reception for taxes of any funds, currency, or bank bills not authorized to be received for such taxes by the Act of the General Assembly levying the same;" and directs that "no writ, order, or process of any kind whatsoever, staying or preventing any officer of the State charged with a duty in the collection of taxes from taking any step or proceeding in the collection of any tax, whether such tax is legally due or not, shall in any case be granted by any court, or the judge of any court, but in all cases whatsoever the person against whom any taxes shall [228] stand charged upon the books of the county treasurer shall be required to pay the same in such funds and moneys as the said county treasurer shall be authorized to receive by the Act of the General Assembly levying the said taxes, in manner and form as above provided, and thereupon shall have his remedy under the provisions of the first section of this Act, and in no other manner."

The third section of the Act is as follows: "That in all cases in which any person against whom any taxes stand charged upon the books of any county treasurer of the State has heretofore tendered in payment of the same any funds, currency, or bank bills, other than such as the said treasurer was authorized to receive by the Act of the General Assembly levying said taxes, the said treasurer shall receive from such person the said taxes without penalty in funds or moneys authorized to be received by the Act of the General Assembly levying the same: *Provided*, That such taxes shall be so paid within sixty days from the passage of this Act; and any person so paying the same may do so under protest, and thereupon shall be entitled to all the benefits of the remedy provided in section 1 of this Act."

The Supreme Court of South Carolina, in rendering the judgment now under review (21 S. C. 560), referred in its opinion to the legislation of the State on the subject of its bonded indebtedness, an abstract of which is given in the pleadings, beginning with the Joint Resolution adopted June 8, 1877; and declared that it "was manifestly designed to ascertain judicially, by the rules and principles of law which regulate contracts between individuals, what was the valid debt of the State, and to make ample provision for the prompt and punctual payment of the interest on the debt so ascertained." After tracing the history of this legislation, and of the judicial and other proceedings taken thereunder, the opinion of the Supreme Court of South Carolina proceeds as follows:

"In pursuance of these provisions, a very large amount of the original consolidation bonds, which were colored green and are usually designated as green bonds or 'green consols,' were exchanged for the new consolidation [229] bonds, colored brown, and are usually designated as 'brown bonds' or 'brown consols,' and represent the valid, unquestioned debt of the State, the coupons on which are received for taxes or are promptly paid on presentation. But as it was impossible to tell whether a 'green bond' represented in whole or in part, and, if so, what part, any portion of the valid debt of the State, without an examination of the records of the office of the treasurer of the State, where the various reports of the special commissioner above mentioned were filed, the various county treasurers of the State are not allowed to receive the coupons of the 'green bonds' in payment of taxes until they have been examined, and any invalidity which they may contain eliminated, and the valid portion converted into 'brown bonds.'

"It seems, therefore, that the scope and effect of this legislation was not to impair the obligation of any contract entered into by the State with its bondholders, whereby the State had agreed to receive the coupons of certain bonds in payment of taxes, but was simply to provide a mode of proceeding by which it could be definitely and easily ascertained whether a coupon offered in payment of taxes represented any portion of the valid debt of the State; for, unless it did, there certainly was no contract on the part of the State that it should be received in payment of taxes." * * * "It certainly cannot be pretended that because a taxpayer tenders in payment of his taxes a coupon of a bond purporting to be a consolidation bond of the State, colored green, that the State and its fiscal officers are bound to receive it without question as to whether it is valid or invalid; and as the State cannot be sued except with its own consent, and then only in the mode which it permits, it follows necessarily that the only mode by which validity of the coupon offered in payment of taxes can be tested is that which has been prescribed by the State."

In answer to the objection that the present

plaintiff was not a party to any of the actions instituted in the court of claims to test the validity of his bonds, and that he is not bound by any adjudication therein, the opinion says: [230] "This position might possibly be very well maintained if the defense here was based simply on the doctrine of *res adjudicata*; but that is not the ground upon which the defense rests. The true ground is, that, as the State could not be sued except with its own consent, and then only in the mode which it had seen fit to prescribe, and as the State did prescribe a mode by which it could be sued, and the validity of its debt tested upon the same principle by which the contracts of individuals are tested, and having invited all persons having claims against it, whose claims were disputed, to come in and assert and establish their claims, one who has failed to avail himself of the opportunity thus offered cann ot afterward, in another proceeding, not permitted by the State, maintain an action against the State or against any of its officers for refusing to do that which the laws of the State forbid."

The Supreme Court of South Carolina then proceeds to examine the contention on the part of the plaintiff, that the Act of the 24th of December, 1878, entitled, "An Act to Facilitate the Collection of Taxes" (16 Stat. 785), expressly authorizes an action against the county treasurer when such coupons as his have been tendered for taxes and refused. Upon that point its opinion is expressed as follows:

"This position is, we think, based upon a total misconception of the true meaning of that Act. It certainly never was designed to afford an opportunity to a bondholder to reopen the question as to the validity of any portion of the state debt, which it was supposed had been determined by the decision of this court in the '*Bond Debt Cases*,' from which no intimation of appeal had been given. The very object of the legislation of the State hereinbefore considered was, as we have seen, to obtain a final determination of the question of the validity of the state debt; and certainly the Legislature, by an Act passed nearly a year before such final determination was reached, never intended to afford the means of reopening any of the questions thus finally determined. In addition to this, the phraseology of the Act shows that it was never designed to afford a remedy to the bondholder in case his [231] coupons were refused when tendered for taxes, but was intended solely to afford a remedy in case bills of the bank of the State were refused when tendered for taxes. But even if it should be conceded that the terms of the Act to facilitate the collection of taxes were broad enough to cover a case in which coupons of bonds purporting to be bonds of the State are refused when tendered for taxes, as well as a case in which taxes are tendered and refused in other 'funds and moneys' than the collecting officers are authorized by the Act levying such taxes to receive, we do not see how these actions can be maintained. By the express terms of the Act it must be made to appear that the county treasurer has illegally and wrongfully refused to receive payment of the taxes assessed against the plaintiff in anything else but gold and silver coin, United States currency national bank notes, and coupons which shall become payable during the year 1882, on the valid consolidation bonds of this State, known as 'brown bonds,' as required to do by the 7th section of the 'Act to Raise Supplies and Make Appropriations for the Fiscal Year Commencing November 1, 1881,' approved February 9, 1882 (17 Stat. 1070). Practically this last mentioned Act forbids county treasurers from receiving in payment of taxes any coupons of bonds which have not been ascertained in the manner prescribed by the legislation hereinbefore mentioned to be valid obligations of the State. Now, if, as we have seen, the State had the right to prescribe the mode by which the validity of any bond purporting to be an obligation of the State should be tested and determined, and if, as we have also seen, such mode was prescribed, and the validity of all the various classes of bonds purporting to be obligations of the State was passed upon and finally determined, it would seem to follow necessarily that the State had a perfect right to forbid its officers charged with the collection of its revenue from receiving in payment of taxes any coupons or other form of obligation which had not only not been adjudged to be a valid obligation of the State, but which, on the contrary, had been expressly adjudged to be invalid. There certainly can be nothing illegal or wrongful in an officer of the State yielding [232] obedience to a law of the State passed in the usual form, in pursuance of a judgment of its highest judicial tribunal, from which there had been no appeal to the tribunal of last resort, though express provision had been made for such appeal."

After having thus decided that the present action was not maintainable under the provisions of the Act of December 24, 1878, the Supreme Court of South Carolina proceeds to review the grounds of its prior decisions in the *Bond Debt Cases*, 12 S. C. 263, 294, and restates and reaffirms the same, going at large into the question of the validity of the bonds held by the plaintiff as obligations of the State, adjudging them to be invalid. The conclusion follows and is declared that the Act of the General Assembly entitled "An Act to Raise Supplies and Make Appropriations for the Fiscal Year Commencing November 1, 1881," approved February 9, 1882, alleged by the plaintiff to be void as impairing the obligation of the State contained in the bonds and coupons, is a valid and constitutional law, and justified the defendant, as County Treasurer, in refusing to receive the coupons in payment of taxes when tendered.

It thus appears that in point of fact the Supreme Court of the State of South Carolina in its opinion in this case passed upon the federal question sought to be raised by the plaintiff as the foundation of his case, and decided it adversely to him; but the analysis of the case which we have made shows clearly that the decision of that question was not necessary to the judgment. Before reaching that question the supreme court had already decided that the action of the plaintiff could not be sustained, according to the meaning of the provisions of the statute under which it was brought. The decision of that point was final, and was fatal to the plaintiff's right of recovery. That question is not a federal question; it does not arise

under the Constitution of the United States, or under any law or treaty made in pursuance thereof. It is not a question, therefore, which, under this writ of error, we have a right to review. We are not authorized to inquire into the grounds and reasons upon which the supreme court proceeded in its construction of [233] that statute. It is a state statute conferring certain rights upon suitors choosing to avail themselves of its provisions upon certain conditions in certain cases. Who may sue under it, and when, and under what circumstances, are questions for the exclusive determination of the state tribunals, whose judgment thereon is not subject to review by this court. It was competent for the State of South Carolina either to grant or withhold the right to bring suits against the officers of the State for the recovery of money alleged to have been illegally exacted and wrongfully paid. If granted, the action is in substance, though not in name, an action against the State itself, just as an action, permitted by the Act of Congress on the subject, against a collector of customs for the recovery of duties alleged to have been illegally exacted, and paid under protest, is an action against the United States, though nominally against the collector. In such cases, as the State may withhold all remedy, it may attach to the remedy it actually gives whatever conditions and limitations it chooses; and its own interpretation and application of its statutes on that subject, given by its own judicial tribunals, are conclusive upon the parties seeking the benefit of them. No right secured by the Constitution of the United States to any citizen is affected by them unless they are framed or administered so as, in some particular case, to deprive the party of his property without due process of law or to deprive him of the equal protection of the laws. No such question is or can be made in reference to the statute of South Carolina under consideration. It authorizes, in certain enumerated cases, parties found to be within its terms to bring a prescribed action against the State in the name of one of its officers. According to the decision of its highest tribunal, the plaintiff in this action is not within the class entitled to sue. To review that judgment is not within the province of this court, because it does not deny or injuriously affect any right claimed by the plaintiff under the Constitution or laws of the United States.

It is a well settled rule, limiting the jurisdiction of this court in such cases, that "where it appears by the record that the judgment of the state court might have been based either [234] upon a law which would raise a question of repugnancy to the Constitution, laws, or treaties of the United States, or upon some other independent ground, and it appears that the court did, in fact, base its judgment on such independent ground, and not on the law raising the federal question, this court will not take jurisdiction of the case, even though it might think the position of the State court an unsound one." *Klinger* v. *Missouri*, 80 U. S. 13 Wall. 257, 263 [20: 635, 637] per *Mr. Justice* Bradley. And it has been repeatedly decided, under section 709 of the Revised Statutes, that, to give this court jurisdiction of a writ of error to a state court, it must appear affirmatively not only that a federal question was presented for decision to the highest court of the State, having jurisdiction, but that its decision was necessary to the determination of the cause, and that it was actually decided, or that the judgment as rendered could not have been given without deciding it. *Brown* v. *Atwell*, 92 U. S. 327 [23: 511]; *Citizens Bank* v. *Board of Liquidation*, 98 U. S. 140 [25: 114]; *Chouteau* v. *Gibson*, 111 U. S. 200 [28: 400]; *Adams County* v. *Burlington & M. R. R. Co.* 112 U. S. 123 [28: 678]; *Detroit City R. Co.* v. *Guthard*, 114 U. S. 133 [29: 118]; *New Orleans Water Works Co.* v. *Louisiana Sugar Refining Co.* 125 U. S. 18 [31: 607].

Inasmuch, therefore, as the judgment of the Supreme Court of the State of South Carolina, sought to be brought in review by this writ of error, does not involve any question necessarily arising under the Constitution of the United States or the laws and treaties made in pursuance thereof, we must refuse to take jurisdiction in the case.

The writ of error is accordingly dismissed for want of jurisdiction.

ANNA E. CAMERON ET AL. *Appts.*, [322]

v.

ASA HODGES ET AL.

(See S. C. Reporter's ed. 322-326).

Jurisdiction of circuit courts—citizenship of parties—statement— objection —amendment—remanding suit.

1. It is not sufficient, to give jurisdiction to a Circuit Court of the United States, that the defendant in the suit is a citizen of the State, and that none of the complainants were citizens of that State. The adverse party must be a citizen of some other named State, or an alien.
2. A citizen of a Territory, or of the District of Columbia, can neither bring nor sustain a suit on the ground of citizenship, in one of the Circuit courts.
3. A distinct statement of the citizenship of the parties, and of the particular State in which it is claimed, is required, in order to sustain the jurisdiction of the circuit court.
4. This court will, on its own motion, take the objection of the want of jurisdiction in the circuit court, especially as regards citizenship.
5. This court may reverse the decree of the court below because it had no jurisdiction, but has no power to amend the record so as to give jurisdiction to that court.
6. Where it appears upon the face of the affidavit or petition for removal of a suit from a state court that the suit has been improperly removed into the circuit court, it is the duty of that court at any time to remand the suit to the state court.

[No. 208.]

Argued April 5, 1888. Decided April 30, 1888.

APPEAL from a decree of the Circuit Court of the United States for the Western District of Tennessee dismissing a bill in regard to the title to real estate. *Reversed.*

The facts are stated in the opinion.

Messrs. **D. H. Poston** and *W. K. Poston*, for appellants:

The bill being on oath, the answer only makes an issue, and one witness will overturn it.

McLard v. *Linnville*, 10 Humph. 163, *Trabue* v. *Turner*, 10 Heisk. 447.

The plaintiff may waive an answer under oath, and the answer will then be entitled to no more weight as evidence than the bill.

Lindsley v. *James*, 3 Coldw. 487.

In Tennessee a party failing to testify as to matters shown to be necessarily within his personal knowledge affords a presumption against him.

Dunlap v. *Haynes*, 4 Heisk. 479; *Alley* v. *Connell*, 3 Head, 578; *Louisville & N. R. R. Co.* v. *Garrett*, 8 Lea, 438.

The refusal of the party to produce his books or papers raises a presumption adverse to the party.

Clifton v. *U. S.* 45 U. S. 4 How. 242 (11: 957); *Hanson* v. *Eustace*, 43 U. S. 2 How. 653 (11: 416); 2 Whart. Ev. §§ 1265, 1266.

The nonproduction of evidence clearly within the power of a party creates a strong presumption against him.

Miller v. *Jones*, 32 Ark. 337.

Messrs. **W. G. Weatherford** and *T. B. Turley*, for appellees:

An assignment that points to no specific error is too vague and indefinite, and should be disregarded.

Deitsch v. *Wiggins*, 82 U. S. 15 Wall. 539 (21: 228); *Ryan* v. *Koch*, 84 U. S. 17 Wall. 19 (21: 611).

The questions involved being matters of fact, this court will affirm the decree.

Harrell v. *Beall*, 84 U. S. 17 Wall. 590 (21: 692); *Alviso* v. *U. S.* 75 U. S. 8 Wall 337 (19: 305); *Parker* v. *Phetteplace*, 68 U. S. 1 Wall. 684 (17: 675); *Lytle* v. *Arkansas*, 63 U. S. 22 How. 193 (16: 306).

Acknowledgment cannot be proven by parol testimony.

Elliott v. *Peirsol*, 26 U. S. 1 Pet. 338 (7: 169).

In Arkansas, the executory and unacknowledged contract of a married woman to convey her real estate is void.

Wood v. *Terry*, 30 Ark. 385.

Voidable at her election.

Milwee v. *Milwee*, 44 Ark. 112.

She cannot make executory contracts to convey.

Chrisman v. *Partee*, 38 Ark. 31; *Wood* v. *Terry*, *supra*.

When a written contract is to be proven by parol, the substance of the agreement ought to be proven satisfactorily.

Tayloe v. *Riggs*, 26 U. S. 1 Pet. 600 (7: 279); *Findley* v. *Hinde*, 26 U. S. 1 Pet. 245 (7: 130); *Vattier* v. *Hinde*, 32 U. S. 7 Pet. 266 (8: 680); *Nichols* v. *Kingdom Iron Ore Co.* 56 N. Y. 618; *Edwards* v. *Noyes*, 65 N. Y. 125.

Mr. Justice **Miller** delivered the opinion of the court:

This is an appeal from the Circuit Court of the United States for the Western District of Tennessee.

The suit was originally brought in the Chancery Court of Shelby County, held in the City of Memphis in that State, in regard to a controversy which arose concerning the title to certain real estate situated in the State of Arkansas. The principal defendant, Asa Hodges, was a citizen of Arkansas, and upon that ground procured an order in the chancery court to remove the case into the Circuit Court of the United States for the Western District of Tennessee. The allegation upon which this removal was made is as follows:

"In the Chancery Court of Shelby County, Tennessee. [323]

"Anna E. Cameron et al. *vs.* Asa Hodges et al. } R. 4593.

"To the Hon. W. W. McDowell, Chancellor:

"Your petitioner states that he is, and at the time of the institution of this suit was, a citizen of the State of Arkansas, and not of the State of Tennessee, and that none of the complainants are or were at that time citizens of the State of Arkansas; that said suit is of a civil nature, and the matters in controversy exceed, exclusive of costs, in value the sum of five hundred dollars; that the controversy affects the ownership of real estate in said State of Arkansas, and can be wholly decided between complainants and this defendant. Wherefore he prays an order for the removal of said cause from this court to the United States Circuit Court for the Western District of Tennessee, at Memphis, and he tenders herewith the requisite bond, as required by law, for the removal thereof.

"Asa Hodges, the petitioner, being sworn, says the matters set forth in the above petition are true as far as stated on his own knowledge; the rest he believes to be true. Asa Hodges.

"Sworn to this October 2, 1882.

"J. M. BRADLEY, *Deputy Clerk and M.*"

While this petition sets forth the citizenship of Hodges to be in the State of Arkansas, both at the commencement of the suit and at the time of the application for removal, it does not state that of any of the complainants, but merely says "that none of the complainants are or were at that time citizens of said State of Arkansas;" nor have we been able to find in the record any evidence, allegation or statement as to the citizenship of any of them. That the defendant Hodges was a citizen of Arkansas, in connection with the fact that none of the complainants were citizens of that State, is not sufficient to give jurisdiction in a Circuit Court of the United States. *Brown* v. *Keene*, 33 U. S. 8 Pet. 115 [8: 886].

The adverse party must be a citizen of some other named State than Arkansas, or an alien. [325] All the complainants might be residents and citizens of the District of Columbia, or of any Territory, and they might not be citizens of the State of Tennessee where the suit was brought, or indeed, of any State in the Union. A citizen of a Territory, or of the District of Columbia, can neither bring nor sustain a suit on the ground of citizenship, in one of the circuit courts. *Barney* v. *Baltimore*, 73 U. S. 6 Wall. 280 [18: 825].

This court has always been very particular in requiring a distinct statement of the citizenship of the parties, and of the particular State in which it is claimed, in order to sustain the jurisdiction of those courts; and inasmuch as the only citizenship specifically averred and set out in the case before us is that of the defendant Hodges, at whose instance the cause was removed, and as that is the only ground upon which the removal was placed, it seems clear that the circuit court did not have jurisdiction of it, and that the suit should have been

dismissed or remanded for that reason. *Robertson* v. *Cease*, 97 U. S. 646 [24: 1057]. The allegation which was made in that case, that Cease, who was the plaintiff, in the action in the Circuit Court for the Western District of Texas, "resides in the County of Mason and State of Illinois," was held not to be a sufficient averment of his citizenship in Illinois. See, also, *Godfrey* v. *Terry*, 97 U. S. 171 [24: 944].

This court has uniformly acted upon the principle that, in order to protect itself from collusive agreements between parties who wish to litigate their controversies in the federal courts, it would, on its own motion, take the objection of the want of jurisdiction in the circuit court, especially as regards citizenship. *Hilton* v. *Dickinson*, 108 U. S. 165 [27: 688]; *Morgan* v. *Gay*, 86 U. S. 19 Wall. 81 [22: 100].

We have considered the application of Hodges, the defendant in error, to supply the want of averments in regard to the citizenship of the complainants in this suit. The difficulty here, however, does not relate to the jurisdiction of this court,—in regard to which evidence by affidavit has sometimes been received where the defect was as to the amount in controversy, and perhaps in relation to some other point. The jurisdiction of this court in the present [326] case is undoubted, but, as the previous remarks in this opinion shows, the circuit court never had jurisdiction of it; and while we may be authorized to reverse the decree so rendered we have no power to amend the record so as to give jurisdiction to that court by proceedings here. The case in this court must be tried upon the record made in the circuit court. In this instance there has been a removal from a tribunal of a State into a Circuit Court of the United States, and there is no precedent known to us which authorizes an amendment to be made, even in the circuit court, by which grounds of jurisdiction may be made to appear which were not presented to the state court on the motion for removal. In fact, under the fifth section of the Act of March 3, 1875, it being manifest upon the face of the affidavit or petition for removal in the present suit that the case had been improperly removed into the circuit court, it was the duty of that court, at all times and at any time during its pendency before it, to have remanded the case to the tribunal of the State where it originated. We can do no more, however, than to reverse the action of the court below, from which this appeal was taken, because it had no jurisdiction of the case.

The decree in this case is reversed for want of jurisdiction in the Circuit Court, and the case remanded for further proceedings.

---

[326] WILLIAM C. CULBERTSON, *Plff. in Err.*,

v.

THE H. WITBECK COMPANY.

(See S. C. Reporter's ed. 326-337.)

Witnesses to deed—acknowledgment—Michigan record—declaration of trust—Michigan tax deed—evidence.

1. A deed in Michigan *held* to be sufficiently witnessed by two persons where the signatures of the witnesses follow a memorandum of interlineation.

2. An acknowledgment in New Jersey, where the notary certifies that he is satisfied that the persons appearing before him are the grantors in the deed, held sufficient, where it is accompanied by a certificate of the clerk of the county that the acknowledgment was taken according to the laws of that State.

3. A record from the office of the register of deeds of a county in Michigan, containing a certified copy of a will executed and proved in New York, is admissible in evidence, to show the will as probated in Michigan, where the record shows due notice by publication and due proof of its execution.

4. A declaration of trust, held not admissible in evidence to impeach the conveyance of the trustees, where it appears that they had power and authority to sell and convey the property, and that the proceeds were to be divided according to the instrument creating the trust.

5. A tax deed in Michigan is void where it appears that a portion of the tax for which it was given was excessive and invalid; and such deed is not admissible to sustain the grantee's title.

6. Parol evidence of the payment of part of the tax for illegal purposes is admissible, where the records show that it was raised for such purpose.

[No. 217.]

Argued April 11, 1888. Decided April 30, 1888.

IN ERROR to the Circuit Court of the United States for the Western District of Michigan, to review a judgment for plaintiff in an action to recover land. *Affirmed.*

The facts are stated in the opinion.

Messrs. **D. H. Ball,** *A. T. Britton, A. B. Browne* and **Walter H. Smith,** for plaintiff in error:

The deed from William A. Pratt should not have been received in evidence.

Howell, Stat. § 5658; *Crane* v. *Reeder*, 21 Mich. 60; *Brown* v. *Cady*, 11 Mich. 535; *Clark* v. *Graham*, 19 U. S. 6 Wheat. 577 (5:334.)

The record of the will of Edward C. Wilder should have been excluded.

Howell, Stat. § 5806; *Pope* v. *Outler*, 34 Mich. 152.

The deputy auditor-general had power to execute conveyances on sale of lands for taxes.

Westbrook v. *Miller*, 56 Mich. 148.

These deeds were *prima facie* evidence of the regularity of all proceedings, to and including the sale, and of title in the grantee.

Groesbeck v. *Seeley*, 18 Mich. 329; *Hunt* v. *Chapin*, 42 Mich. 24; *Stockle* v. *Silsbee*, 41 Mich. 615.

The record cannot be contradicted.

Taymouth v. *Koehler*, 35 Mich. 22; *Young* v. *Duvall*, 109 U. S. 577 (27:1037).

Messrs. B. J. Brown and **Edward Cahill,** for defendant in error:

The deed from William Pratt is an old deed, and the courts will sustain it.

Carpenter v. *Dexter*, 75 U. S. 8 Wall. 513 (19: 426); *Morse* v. *Hewett*, 28 Mich. 481.

Probate courts are courts of record, and all presumptions will aid their judicial action.

Church v. *Holcomb*, 45 Mich. 29; *Alexander* v. *Rice*, 52 Mich. 451.

The deed of October 29, 1855, from William A. Pratt and wife to Manning & Wright, was an absolute conveyance in fee.

Trask v. *Green*, 9 Mich. 358; *Maynard* v. *Hoskins*, Id. 485; *Weare* v. *Linnell*, 29 Mich. 224.

It was not the purpose of the statute (How. Stat. 5569) to require resulting trusts to be declared in writing.

Fisher v. *Fobes*, 22 Mich. 454; *Bumpus* v. *Bumpus*, 53 Mich. 346.

Certainty has always been an essential element of a valid trust.

Wheeler v. *Smith*, 50 U.S. 9 How. 55 (13:44); *Barnes* v. *Barnes*, 3 Cranch, C. C. 269.

A trustee conveys by virtue of the legal estate vested in him, and not by virtue of a power.

Bank of U. S. v. *Benning*, 4 Cranch, C. C. 81.

The plaintiff could bring ejectment.

Everts v. *Beach*, 31 Mich. 186; *Davis* v. *Filer*, 40 Mich. 316.

When a sum of money is voted in gross, without specifying the purpose for which it is raised, it may be shown, *dehors* the record, that it was in fact raised in part for an illegal purpose.

Fay v. *Wood*, 8 West. Rep: 835.

A tax sale of lands for a sum which includes an illegal item of any considerable amount is void.

Lacey v. *Davis*, 4 Mich. 140; *Case* v. *Dean*, 16 Mich. 12; *Edwards* v. *Taliafero*, 34 Mich. 13; *Hammontree* v. *Lott*, 40 Mich. 195; *Silsbee* v. *Stockle*, 44 Mich. 561.

Evidence must be produced, by the party objecting, which will exclude any reasonable presumption of regularity. When this is done, the burden of proof is shifted to the holder of the tax deed.

Lacey v. *Davis*, 4 Mich. 157, 158; *Case* v. *Dean*, 16 Mich. 37; Blackw. Tax Titles, 83, note and cases cited.

[328] *Mr. Justice* **Miller** delivered the opinion of the court:

This is an action of ejectment, originally brought in the Circuit Court for the County of Marquette, in the State of Michigan, by the H. Witbeck Company, plaintiff, against William C. Culbertson, defendant.

The object of the suit was to recover certain lands situated in the County of Marquette, to which the plaintiff claimed title in fee. The case was removed to the Circuit Court of the United States, where a trial was had which resulted in a verdict in favor of the plaintiff. This, as a matter of right, was set aside, upon motion, under the law of Michigan, and a new trial granted, which also resulted in a verdict and judgment in favor of the plaintiff. It is this which the present writ of error brings up for review.

During the progress of the trial the plaintiff established title by various conveyances, beginning with patents from the United States, in William A. Pratt. As a link in the chain of title from Pratt, the plaintiff offered in evidence the record of a deed from Pratt and wife to Still Manning and William Wright, which was executed and acknowledged in the State of Michigan. This was objected to by the defendant upon the ground that it was attested by only one witness as to the signature of William A. Pratt. The instrument was, however, admitted in evidence notwithstanding the objection; to which the defendant excepted. This ruling is made the ground of the first assignment of error.

The deed offered in evidence was signed, acknowledged and recorded according to the laws of the State of Michigan. It is admitted that there was one witness to the signature of Mr. Pratt and two witnesses to the signature of Mrs. Pratt, but it is denied that there was a second witness to the signature of the former. The part of the record containing the testimonium is as follows:

"In witness whereof the said party of the first part have hereunto set their hands and seals the day and year first above written. [329]

"WM. A. PRATT. [L. S.]
"HARRIET W. PRATT. [L. S.]

"Signed, sealed and delivered in presence of—

"STEPHEN WALSH,
"For William A. Pratt.
"W. H. ROCKWELL,
"GEO. HOWE,
"For Harriet W. Pratt.

"The word 'half' in the twelfth line was interlined before signing [on the second page].

"STEPHEN WALSH.
"EBENEZER WARNER."

Ebenezer Warner was the justice of the peace who took the acknowledgment of Pratt on the 29th day of October, 1855, which is also the date of the deed, and in his certificate of such acdnowledgment he says: "I certify that I know the person who made the said acknowledgment to be the individual described in and who executed the within instrument." It will also be noted that he signs with Walsh as a witness, and that their signatures immediately follow the statement as to the word "half" having been interlined before signing.

These circumstances are sufficient to show that Walsh and Warner were witnesses to the signature of Mr. Pratt, and the matter may be easily explained by supposing that Rockwell and Howe, the two witnesses for Harriet W. Pratt, inserted their names above those of Walsh and Warner as witnesses for William A. Pratt. Under all the circumstances we think the court was correct in admitting the deed in evidence. *Carpenter* v. *Dexter*, 75 U. S. 8 Wall. 513 [19:426].

The second assignment of error also rests upon an alleged insufficiency in the acknowledgement of another deed which was offered in evidence by the plaintiff, from Still Manning and wife and William Wright and wife to Edward C. Wilder, conveying all the lands [330] in controversy. To the admission of this deed defendant's counsel objected "for the reason that it does not appear on said certificate that the persons acknowledging were the same persons as those named as grantors in said deed." The acknowledgment in this case was taken in the State of New Jersey, before William A. Richter, a master in chancery and notary public, who says in his certificate that the parties, naming them, personally appeared before him, "who, I am satisfied, are the grantors in the within deed of conveyance." This language is the defect complained of by defendant.

We are inclined to the opinion that this is sufficient evidence that the parties who appeared before him were the grantors in the deed. If he was satisfied of that fact the court cannot now inquire into the evidence by which he reached that conclusion. But any difficulty on this subject is removed by the certificate of the clerk of the county of Essex in that State, that said Richter was a master in chancery and a notary public in and for said

county, and "that the annexed instrument [meaning the deed] is executed, and the proof of acknowledgment thereto taken, in accordance with the laws of the said State of New Jersey." This official statement that the acknowledgment was made according to the laws of the State is, we think, sufficient to make it valid, because the law of Michigan provides (Howell, Stat. § 5660) that where such acknowledgments are taken out of the State, the clerk certifying to the official character of the officer shall also state "that the deed is executed and acknowledged according to the laws of such State."

The third assignment of error is based upon the fact that the court allowed the plaintiff to put in evidence a record, from the office of the register of deeds of Marquette County, of the will of Edward C. Wilder. The objection of defendant's counsel to the admission of this certified copy of the will, as stated in the bill of exceptions, is "that said record contained no proof that the Probate Court of the County of Marquette obtained jurisdiction to make the order admitting said will to probate in this [331] State, and that it contains no record of any authentication or probate by any foreign court or officer." This objection being overruled, an exception was taken by counsel for the defendant to the admission of the record.

The copy contained, after the seal of Wilder, the testator, the usual attestation of two witnesses, who declare that the will was signed in the presence of each of them, and that it was at the same time declared by him to be his last will and testament, and that at his request and in his presence they signed their names as witnesses thereto. The testator died in New York, and the paper offered for probate in the County of Marquette, in Michigan, purported to be a copy of the will as it had been probated in the former State. The following papers constitute the proceedings in the Probate Court for the County of Marquette:

"STATE OF MICHIGAN, *County of Marquette, ss:*

"At a session of the Probate Court for the County of Marquette, holden at the probate office in the City of Marquette, on Monday, the thirty-first day of October, in the year one thousand eight hundred and eighty-one.

"Present: Edward S. Hardy, judge of probate.

"In the Matter of the Estate of Edward C. Wilder, Deceased.

"This day having been appointed by the court for hearing the petition of James E. Dalliba, praying, amongst other things, for reasons therein set forth, that a certain instrument, purporting to be a copy of the last will and testament of said deceased, and the probate thereof, duly authenticated and heretofore presented to this court with said petition, be allowed, filed and recorded. Now come into court the said petitioner and answers, and, it satisfactorily appearing, by due proof on file, that a copy of the order of this court touching the hearing of said petition, made on the seventh day of October last past, had been duly published as therein directed, whereby all parties interested in the premises were duly notified of said hearing.

"And it further satisfactorily appearing to [332] the court, after a full hearing upon said petition and on examination of the proofs and allegations of the petitioner, that said deceased was, at the time of his death, a resident of the City of New York, in the State of New York, and died leaving his last will and testament, which was duly approved and allowed in the surrogate court for, in and of the County of New York, in the State of New York, according to the laws thereof, and that he was possessed of estate situate in said County of Marquette, on which said will operates.

"And the evidence touching the premises being materially considered, it satisfactorily appears that said copy of said will ought to be allowed in this State as the last will and testament of said deceased.

"It is therefore ordered, adjudged and declared by this court that said copy of said last will and testament of said deceased be allowed, filed, and recorded in this court; and that the same shall have full force and effect in this State as such will, agreeably to the statute in such case made and provided.

"And it is further ordered that the execution of said last will and testament be committed, and the administration of the estate of the said deceased be granted, to said Sophia Wilder, the executrix in said will named, who is ordered to give bond in the penal sum of one thousand dollars, with sufficient sureties, as required by the statute in such case made and provided; and that, the same being duly approved and filed, the letters testamentary do issue in the premises.

"EDWARD S. HARDY,
"*Judge of Probate.*"

"STATE OF MICHIGAN, *County of Marquette, ss:*
"Probate Court for said County.

"Be it remembered that the annexed and foregoing instrument, being a duly authenticated copy of the last will and testament of Edward C. Wilder, late of the County of New York, in the State of New York, deceased, which was duly allowed, filed, and recorded in said court in pursuance of the decree thereof, of which the foregoing is a true, full, and correct copy.

"In testimony whereof I have hereunto set [333] my hand and affixed the seal of said court at the City of Marquette, in said county, this thirty-first day of October, in the year one thousand eight hundred and eighty-one.

"[SEAL.] "EDWARD S. HARDY,
"*Judge of Probate.*"

We can see no defect of jurisdiction in the Probate Court of Marquette County sufficient to justify the rejection of this copy of the will, or to impeach the action of the probate judge in ordering it to be recorded. There is in the proceedings the full recital of the production of the copy of the will, and that the order for the hearing of the petition, made on the 7th day of October, "had been duly published as therein directed, whereby all parties interested in the premises were duly notified of said hearing." The court further certifies that the probate thereof was duly authenticated "and presented to this court,"—meaning, evidently, the probate of the will in the State of New York. The certificate further recites that "it satisfactorily appears to the court, after a full hearing upon said petition, and on exami-

nation of the proofs and allegations of the petitioner, that said deceased was, at the time of his death, a resident of the City of New York, in the State of New York, and died leaving his last will and testament, which was duly approved and allowed in the surrogate court for, in and of the County of New York, in the State of New York, according to the laws thereof."

This, being a recital in the record of the judgment of the court admitting the instrument to probate, certifying that it had been fully proved by the "examination of the proofs and allegations of the petitioner," and that it was duly admitted to record, is sufficient. Unless the necessary parties in such cases could be brought before the court by publication there would be in many cases an impossibility of doing it at all. *Grignon* v. *Astor*, 43 U. S. 2 How. 319 [11:283].

There appears to be some controversy in the brief submitted by counsel as to the fact that the copy of the instrument offered in evidence [334] is certified from the office of the register of deeds; but as no such objection was made upon the trial of the case, it is unnecessary to discuss it here.

The fourth assignment of error is founded upon the rejection of a deed, called a declaration of trust, made by Still Manning and William Wright, which was offered by the defendant. This instrument was signed and acknowledged in the month of November, 1855, and covered the land now in controversy. The deed from Manning and Wright to Wilder, referred to in the second assignment of error, was executed in July, 1860, nearly five years after this declaration of trust. The object of the defendant in offering the latter was to show that the legal title had passed out of Manning and Wright and that Wilder did not get the title by the deed which was made to him. Upon the objection of the plaintiff to the introduction of this deed, it was rejected by the court; to which ruling the defendant excepted.

The proposition upon which the defendant sought to introduce this instrument is founded upon certain statutes of the State of Michigan, of a character similar to those common in other States, found in Howell's Statutes, sections 5563 to 5573, inclusive. They comprise the usual provisions for abolishing uses and trusts, and enact in substance that the use shall vest in the *cestui que trust* as a legal title, except when otherwise provided. Most of these statutes, however, have relation to implied trusts, and it is not necessary here to go through all of them, nor to enter upon their critical discussion at this time. It is sufficient to say that the paper presented in this case is not a conveyance to anybody, but it purports to declare in express terms that the parties executing it hold the property in trust for themselves and two other persons. It is therefore an express trust, and comes within the language of section 5578, which reads as follows:

"5578. Every express trust, valid as such in its creation, except as herein otherwise provided, shall vest the whole estate in the trustees in law and in equity, subject only to the execution of the trust; and the person for whose benefit the trust was created shall take no estate or interest in the lands, but may enforce the performance of the trust in equity."

This declaration of trust evidently contem- [335] plated that the legal title remained with the trustees, and that they had the power and authority to sell and convey the property, the profits or proceeds to be divided according to the interest which was declared in the instrument creating the trust. We think the legal title remained in Manning and Wright, until by the deed to Wilder they transferred to him the strict legal title. The deed was therefore properly rejected.

The next and last assignment of error which we propose to consider relates to the production of various deeds conveying the lands in question to persons under whom the defendant claims on account of sales for taxes. These deeds were offered in evidence, and rejected by the court; to which ruling the defendant excepted.

The principal ground upon which they were held to be invalid was that the tax levy under which they were sold included an illegal allowance for extra compensation to Goodwin and Eddie, who were judges of the state court which included within its jurisdiction the County of Marquette. It appeared that the supervisors of that county allowed and paid to them, out of the tax levies, an additional compensation of $400 per annum in excess of their salary. It does not seem to be controverted that, by the law of Michigan, if this sum was included in the assessment and levy of taxes on account of which the sales were made that these deeds represent, the title based upon them is void. Both parties admit this proposition in argument, and certain authorities referred to in the briefs establish it as the settled doctrine of that State. *Lacey* v. *Davis*, 4 Mich. 140; *Case* v. *Dean*, 16 Mich. 12; *Edwards* v. *Taliafero*, 34 Mich. 13.

In *Hammontree* v. *Lott*, 40 Mich. 195, the court said: "A tax deed is void if a portion of the tax for which it was given was excessive and invalid." In the recent case of *Silsbee* v. *Stockle*, 44 Mich. 561, the whole subject was very elaborately reviewed by *Judge* Cooley, of that court, and the principle here stated fully established. The strength of the opinion in that direction may be seen by the following extract from the syllabus of the case:

"The statutory provisions that no sale for de- [336] linquent taxes shall be held invalid unless it be made to appear that all legal taxes were paid or tendered, and that all taxes shall be presumed to be legally assessed until the contrary is affirmatively shown (Comp. L. § 1129), are unconstitutional so far as they sustain sales for taxes which are in part illegal."

Counsel for plaintiff in error deny the sufficiency of the evidence produced in regard to the increase of salary by the county, above what the State allowed to the judge, or that the fact is established by competent testimony; and it is urged with much force that this attempt to show now, some fifteen or twenty years after the transaction, that the tax levy for the particular years in question, did include this increased compensation, cannot be accomplished by parol testimony. We think, however, that there is enough in the bill of excep-

tions which is not parol, but matter found in the records of the boards of supervisors who made the tax levy, to establish the fact without any parol testimony. The records of the proceedings of this body for Marquette County were read in evidence for each of the years 1861, 1865, 1866, and 1867, the same being all that appeared therein relative to the equalization of the assessment rolls of the several townships and the action by which the rate of apportionment of the state and county taxes for each of those years was fixed. This is spread in full upon the record in the bill of exceptions. It appears that the aggregate valuation of the taxable real and personal property of the county in 1861 was determined to be $1,285,965.50, and we then find this entry:

"The subject of additional compensation to *Judge* Goodwin being under consideration, on motion of —— —— it was resolved that all former action of the board on this subject be rescinded and that the sum of four hundred dollars be paid to *Judge* Goodwin in orders on the treasurer of this county, upon his signing a receipt in full of all demands against the county on such account, up to the first day of January, A. D. 1862, such receipt to be filed with the clerk before such orders are issued."

Then immediately follows the rate of taxation:

[337] "On motion it was resolved that a tax of six and one-half mills on the dollar be raised on the taxable property of Marquette and Schoolcraft Counties, for the contingent fund, to defray the general expenses of the county."

The only parol evidence introduced which seems to have had any influence upon the decision of this question was the testimony of a witness that *Judge* Goodwin received this $400 from the county treasury at a time when it must have been paid out of the levy made at this time. We think that was competent, and that, the date of the receipt of the money being shown, the inference that it was paid out of the tax levy, which we have already recited, is sufficient.

It is also shown by the records of the board of supervisors, in regard to the levies of other years, that for the years 1865, 1866, 1867 and 1868 an illegal sum of the same character, being $350 per annum, was included in the assessment, and paid over to *Judge* Eddie. The court left it to the jury to determine, under all the evidence which was introduced, whether, in pursuance of such resolutions, these sums were levied as a tax, and for the purpose, as claimed by the plaintiff, of paying salaries to these judges. Although he refers in this connection to the additional evidence of two witnesses, Healy and Maynard, as having some influence upon the determination of this question, it is quite obvious that the proposition was established of the payment of additional compensation of these judges out of an unlawful levy of taxes, so far as the lands in question are concerned. And while the parol testimony was not necessary to show that the amount paid for that purpose was included in the tax levy for the years under which these sales were made, it was competent to show by oral testimony that these judges actually received the money out of the taxes collected under those assessments.

These are the only assignments of error which we are called to consider; and as we do not find that there was error in the matters alleged, the judgment of the Circuit Court is affirmed.

MARTHA COLTON, *Appt.*, [300]
v.
ELLEN M. COLTON.

ABIGAIL R. COLTON, *Appt.*,
v.
ELLEN M. COLTON.

(See S. C. Reporter's ed. 300-322).

Decree, when not a bar—trust, when created by will—duty of court—testator's intention—interpretation of will—technical language—uncertain trust.

1. A decree of a Probate Court of California distributing to defendant the estate, real and personal, of testator, and discharging her from further duties as executrix, which shows no adjudication of her interests as devisee and legatee, or of the questions raised in these suits, is not a bar to their prosecution.

2. A clause in the will by which the testator gives his wife all his estate, real and personal, and recommends to her the care and protection of his mother and sister, and requests her to "make such gift and provision for them as in her judgment will be best,"—*Held*, under the circumstances of this case, to give a beneficial interest to the mother and sister, under the will, out of the estate given thereby to the wife, to the extent of a permanent provision for them during their respective lives, suitable and sufficient for their care and protection, having regard to their condition and necessities, and to the amount of the fund.

3. *Held*, further, that it is the duty of the court to ascertain and declare what provision will be suitable under the circumstances, and the details for securing and paying it.

4. *Held*, further, that the testator intended to charge his estate in the hands of his widow with a trust, to the extent indicated, in favor of his mother and sister.

5. The interpretation of a will must be made from a consideration of the whole instrument, and a comparison of its various parts, in the light of the situation and circumstances which surrounded the testator when the instrument was framed.

6. No technical language is necessary to the creation of a trust. A devise or bequest to one person, accompanied by words expressing a wish or recommendation that he will apply it to the benefit of others, may be held to create a trust, if it appear that the words were intended by the testator to be imperative.

7. *Held*, further, that the trust sought to be established under this will is not incapable of execution by reason of uncertainty, or because it involves the exercise of discretionary power on the part of the trustee.

[Nos. 228, 229].

Argued April 13, 16, 1886. Decided April 30, 1888.

APPEALS from decrees of the Circuit Court of the United States for the District of California, dismissing suits brought to compel the execution of a will and the making of suitable provision for the complainants. *Reversed.*

Reported below in 10 Sawy. 325, 336.

Statement by *Mr. Justice* **Matthews**:

These are two bills in equity, one filed by Martha Colton, and the other by Abigail R. Colton, each of whom is a citizen of the State [302] of New York, against Ellen M. Colton, a citizen of California.

Martha Colton alleges in her bill that she was a sister of David D. Colton, who died in San Francisco, California, on October 9, 1878, and that the defendant, Ellen M. Colton, is his widow; that on October 8, 1878, the said David D. Colton made and executed in due form his last will and testament, a copy of which is made a part of the bill, and is set out as follows:

"I, David D. Colton, of San Francisco, make this my last will and testament. I declare that all of the estate of which I shall die possessed is community property and was acquired since my marriage with my wife. I give and bequeath to my said wife, Ellen M. Colton, all of the estate, real and personal, of which I shall die seised or possessed or entitled to. I recommend to her the care and protection of my mother and sister, and request her to make such gift and provision for them as in her judgment will be best. I also request my dear wife to make such provision for my daughter Helen, wife of Crittenden Thornton, and Carrie, as she may in her love for them choose to exercise. I hereby appoint my said wife to be the executrix of this my last will and testament, and desire that no bonds be required of her for the performance of any of her duties as such executrix. I authorize and empower her to sell, dispose of, and convey any and all of the estate of which I shall die seised and possessed, without obtaining the order of the probate court or of any court, and upon such terms and in such manner, with or without notice, as to her shall seem best. If my said wife shall desire the assistance of anyone in the settlement of my estate, I hereby appoint my friend, S. M. Wilson, of San Francisco, and my secretary, Charles E. Green, to be joined with her in the said executorship, and authorize her to call in either or both of the said gentlemen to be her co-executors; and in case she shall so unite either or both of them with her, the same provisions are hereby made applicable to them as I have before made for her in reference to bonds and duties and powers."

[303] The bill further alleges that on or about October 29, 1878, "the defendant duly filed the said last will and testament of the said David D. Colton in the then Probate Court in and for the City and County of San Francisco, State of California, and thereafter such proceedings were duly had in said probate court that on or about the 11th day of November, A. D. 1878, an order of said probate court was duly made and entered appointing the defendant executrix of said will and testament, and thereupon the defendant duly qualified as such executrix, and letters testamentary upon the said last will and testament were duly granted and issued to her, the said defendant, and the said defendant thereupon entered upon and thereafter continued to discharge the duties of such executrix until about the 18th day of December, A. D. 1879, when, by an order or decree of said probate court, then and there duly made and entered, the whole estate, real and personal, of the said David D. Colton then remaining was distributed to the said defendant, and she was discharged from any further duties as such executrix."

The bill then alleges that the estate of David D. Colton thus distributed to the defendant was of the value of about $1,000,000, and that the defendant, though often demanded, has failed, neglected, and refused to make to the plaintiff any gift or provision whatever from the estate of said David D. Colton.

The bill also contains the following allegations:

"Your oratrix further shows that she has no estate, property, or income; that for many years she has been, and still is, dependent upon her mother, the said Abigail R. Colton, for her support and maintenance; that ever since your oratrix was a young child her said mother has been in feeble health, and has always required your oratrix's aid and services, and especially during the lengthened illness and last sickness of your oratrix's said father, and ever since the death of your oratrix's said father as aforesaid, her said mother has been an invalid, and has endured much sickness and suffering, and has required much medical attendance, and the almost constant nursing and care of your oratrix.

"And your oratrix further shows that about December, 1869, your oratrix's said father, Isaac [304] W. Colton, then residing in the city of New York, at the request of your oratrix's brother, the said David D. Colton, then residing in San Francisco aforesaid, converted all his property, consisting of what was then known as five-twenty bonds of the government of the United States, as was well known to the said David D., in gold, amounting to the sum of fifteen thousand dollars, and loaned the same to the said David D.; and thereupon your oratrix's father received therefor the promissory note of the said David D. Colton, dated at San Francisco aforesaid, on or about December 7, 1869, for the said sum of $15,000, payable in gold, with interest; that afterwards, on or about March 1, 1873, the said David D. Colton renewed his said note by giving his new note to his father, the said Isaac W. Colton, for the same amount and payable in the same manner, and which said new note was owned and held by your oratrix' said father at the time of his death.

"And your oratrix further shows that her said father died intestate, and that after his death, and on or about March first, A. D. 1877, the said David D. Colton, with the consent of your oratrix, took up said last-mentioned note by giving his new note therefor, payable to his and your oratrix's mother, the said Abigail R. Colton, for the said sum of fifteen thousand dollars, with interest; and thereby your oratrix surrendered and relinquished all her legal share and interest in said note so held by her father at the time of his death, as aforesaid, as your oratrix's brother, the said David D. Colton well knew."

The prayer of the bill is that the "defendant may be compelled to execute the terms and directions of the said last will and testament of the said David D. Colton, and to make your oratrix a suitable provision from the said estate of the said David D. Colton in such amount and in such manner as to your honors shall seem most meet and proper in the premises."

Abigail R. Colton, complainant in the other bill, is the mother of Martha Colton, and also of David D. Colton the testator. Her bill is in substance the same as that of Martha Colton, and prays for similar relief, but contains the following:

[305] "And your oratrix further shows that the said defendant has, although often demanded, utterly failed, neglected, and refused to make to or for your oratrix any gift or provision whatever from the estate of your oratrix' son, the said David D. Colton, except as hereinafter mentioned, that is to say: On or about March 1, 1880, the defendant sent to your oratrix the sum of fifty dollars; and thereafter, at divers times, and at various intervals between the day last named and about the first day of January, 1881, the defendant sent to your oratrix about five other sums of fifty dollars each, amounting in the whole, as above given to your oratrix, to the sum of about three hundred dollars; and in or about the month of February, 1881, the defendant sent to your oratrix the further sum of six hundred dollars; and in or about November, 1882, she gave to your oratrix the further sum of six hundred dollars; the whole given, as aforesaid, since the death of the said David D. Colton, amounting all together to the sum of about fifteen hundred dollars only.

"Your oratrix further shows that she is now in the seventy-fifth year of her age, and that for many years prior to the death of her husband, the said Isaac W. Colton, she was in feeble health, and ever since that event she has been an invalid, and endured much sickness and suffering, and has required much medical attendance, and the almost constant nursing and care of her said daughter, Martha Colton, who has always resided with her, until the present time.

"That your oratrix is not the owner of and has no interest in any real estate, or chattels real, except a one-half lot in Greenwood cemetery, near the City of New York, where her said husband is buried, and that, besides her wearing apparel, your oratrix has no personal property whatever except the sum of $15,000, which she has had loaned out upon interest ever since on or about March 1, 1877, from which time the possession and loaning out of the said sum of $15,000 by your oratrix were well known to the said David D. Colton, down to and at the time of his making his last will and testament.

[306] "And your oratrix further shows that her entire income ever since the death of her son, the said David D. Colton, has consisted solely of the interest moneys arising from the loan of the aforesaid fifteen thousand dollars, and the aforesaid several sums of money given by the defendant to your oratrix as aforesaid; and ever since in November, 1882, her income has consisted and does still consist solely of said interest moneys alone.

"And your oratrix further shows that, at the time of the death of the said David D. Colton, his sister, the said Martha Colton, was not and is not now the owner of any real estate or property, nor has she any income whatever; and your oratrix has therefore, ever since the death of the said Martha's father, provided, and still provides, her, the said Martha, support and maintenance.

"That by reason of your oratrix's very limited income aforesaid, and notwithstanding great economy in her living and expenses and the denying herself much that would conduce to her health and comfort, your oratrix is in very straitened circumstances."

To each of these bills the defendant demurred, and for causes of demurrer assigned the following:

"First. That the said complainant hath not by her said bill made such a case as entitles the said complainant to any relief in this court, avouching any of the matters therein complained of, in this, that no estate, trust, or interest exists in favor of said complainant or arises in her favor out of the said last will and testament in her bill set forth, or any matter, legacy, or devise therein contained.

"Second. That this court hath no jurisdiction of the matters and things set forth in said complainant's bill; nor hath it jurisdiction to consider the same or to grant the relief prayed for or any relief whatever.

"Third. That neither this court nor any other court whatever hath jurisdiction to hear and determine the matters and things set forth in complainant's said bill, or to grant the relief therein prayed or any other relief whatever.

"Fourth. That it appears on the face of said complainant's bill that if any cause of action whatever exists by reason of the matters and [307] things in said bill set forth, that such cause of action is founded upon a stale equity and claim.

"Fifth. That it appears on the face of complainant's said bill that the said cause of action therein set forth, if any such exists, accrued more than four years before the commencement of this action; and that the same is barred upon the principle which courts of equity follow in analogy to the Statute of Limitation at law.

"Sixth. That it appears upon the face of said complainant's bill that the said pretended cause of action therein set forth accrued more than four years before the filing of her said bill.

"Seventh. That it appears on the face of complainant's said bill that the matters and things therein sought to be inquired of and determined have long since been inquired into and determined against the said complainant by the Probate Court of the City and County of San Francisco, State of California."

The demurrer to each of the bills was sustained, and they were severally dismissed. *Colton* v. *Colton*, 10 Sawy. 325, 336. From these decrees the present appeals are prosecuted.

Messrs. **Sherman Evarts** and **Wm. M. Evarts**, for appellants:

There is no special language required to create a trust.

King v. *Denison*, 1 Ves. & B. 260; 2 Story, Eq. Jur. § 972; *Sheets' Estate*, 52 Pa. 257; 2 Pom. Eq. Jur. § 1009; Bisph. Eq. § 65; 1 Jarm. Wills, 385.

Whether or not a trust is created is a matter of intention.

Smith v. *Bell*, 31 U. S. 6 Pet. 68 (8:322).

The wish of a testator, like the request of a sovereign, is equivalent to a command.

Hill, Trustees, 116 (73); 1 Perry, Tr. 3d ed. 121; *Burt* v. *Herron*, 66 Pa. 400.

The real question is whether the wish or desire or recommendation that is expressed by the testator is meant to govern the conduct of the party to whom it is addressed.

Williams v. *Williams*, 1 Sim. (N. S.) 358; *Re Pennock's Estate*, 20 Pa. 268; *Malim* v. *Keighley*, 2 Ves. Jr. 531; *Warner* v. *Bates*, 98 Mass. 274.

A devise or bequest to one person, accompanied by words expressing a wish, entreaty or recommendation that he will apply it to the benefit of others, may be held to create a trust.

Foose v. *Whitmore*, 82 N. Y. 405; *Lawrence* v. *Cooke*, 32 Hun, 126; *Willets* v. *Willets*, 35 Hun, 401; *Harrison* v. *Harrison*, 2 Gratt. 1; *Reed* v. *Reed*, 30 Ind. 313; *Erickson* v. *Willard*, 1 N. H. 217; *Knox* v. *Knox*, 59 Wis. 172; *Heard* v. *Sill*, 26 Ga. 302; *Van Ames* v. *Jackson*, 35 Vt. 173; *Chase* v. *Plummer*, 17 Md. 165; *Handley* v. *Wrightson*, 60 Md. 198; *Tolson* v. *Tolson*, 10 Gill. & J. 159; *Rhett* v. *Mason*, 18 Gratt. 541; *Little* v. *Bennett*, 5 Jones, Eq. 156; *Lucas* v. *Lockhart*, 10 Smedes & M. 466; *Lines* v. *Darden*, 5 Fla. 51; *Cockrill* v. *Armstrong*, 31 Ark. 580; *Young* v. *Young*, 68 N. C. 309; *Collins* v. *Carlisle*, 7 B. Mon. 13; *Brasher* v. *Marsh*, 15 Ohio, St. 103; *Dresser* v. *Dresser*, 46 Me. 48; *Carpenter* v. *Miller*, 3 W. Va. 174; *Brunson* v. *King*, 2 Hill, Ch. 483; *Warner* v. *Bates*, 98 Mass. 274; *Hess* v. *Singler*, 114 Mass. 56.

So, if the objects or persons intended to have the benefit of the recommendation or wish be also certain.

Knight v. *Knight*, 3 Beav. 172.

These general rules of construction are adopted in the following cases:

Harding v. *Glyn*, 1 Atk. 469; *Pierson* v. *Garnet*, 2 Bro. Ch. 38, 226; *Malim* v. *Keighley*, 2 Ves. Jr. 529; *Shaw* v. *Lawless*, 1 Lloyd & G. 558; *Tibbits* v. *Tibbits*, 19 Ves. Jr. 656; *Foley* v. *Parry*, 5 Sim. 138; *S. C.* 2 Myl. & K. 138; *Cruwys* v. *Colman*, 9 Ves. Jr. 323; *Parsons* v. *Baker*, 18 Ves. Jr. 476; *Prevost* v. *Clarke*, 2 Madd. 458; *Ware* v. *Mallard*, 16 Jur. 492; *Shovelton* v. *Shovelton*, 32 Beav. 143; *Harland* v. *Trigg*, 1 Bro. Ch. 142; *LeMarchant* v. *LeMarchant*, L. R. 18 Eq. 414; *Curnick* v. *Tucker*, L. R. 17 Eq. 320.

An indefiniteness in the subject does not override the clear intention of the testator to create a trust.

Re Pennock's Estate, 20 Pa. 268; *Hess* v. *Singler*, 114 Mass. 56; *Eade* v. *Eade*, 5 Madd. 118; *Wynne* v. *Hawkins*, 1 Bro. Ch. 179; *Pushman* v. *Filliter*, 3 Ves. Jr. 7.

A court of equity can measure the extent of interest which an adult, as well as an infant, takes under a trust for his support, or other like indefinite expression.

Broad v. *Bevan*, 1 Russ. 511, note; *Wetherell* v. *Wilson*, 1 Keen, 80; *Woods* v. *Woods*, 1 Myl. & C. 401; *Pride* v. *Fooks*, 2 Beav. 430; *Jubber* v. *Jubber*, 9 Sim. 503; *Kilvington* v. *Gray*, 10 Sim. 293; *Soames* v. *Martin*, Id. 287; *Gilbert* v. *Bennett*, Id. 371; *Alexander* v. *McCullock*, 1 Cox. Ch. Cas. 391; *Raikes* v. *Ward*, 1 Hare, 445; *Crockett* v. *Crockett*, Id. 451; *Hamley* v. *Gilbert*, Jac. 354; *Thurston* v. *Essington*, Id. 361, note; *Conolly* v. *Farrell*, 8 Beav. 447; *Donovan* v. *Van De Mark*, 78 N. Y. 244; *Chase* v. *Chase*, 2 Allen, 101.

A power must always be executed *bona fide* for the end and purpose designed.

Costabadie v. *Costabadie*, 6 Hare, 410; *Hamley* v. *Gilbert*, Jac. 354; *Saunders* v. *Schmaelzle*, 49 Cal. 59; Hawkins, Wills, 160; *Haydel* v. *Hurck*, 5 Mo. App. 267; *Wormley* v. *Wormley*, 21 U. S. 8 Wheat. 421 (5:651); 2 Perry, Tr. §§ 511, 511 *a*; 1 Perry, Tr. § 255; *Gower* v. *Mainwaring*, 2 Ves. Sr. 87; Schouler Exrs. & Admrs. § 267; Pom. Eq. Jur. §§ 153, 991; *Arnold* v. *Gilbert*, 5 Barb. 190; *Power* v. *Cassidy*, 79 N. Y. 602; *Coates* v. *Woodworth*, 13 Ill. 654; *Jordan* v. *Jordan*, 2 Law Repos. (N. C.) 409; *Jones* v. *Dougherty*, 10 Ga. 273; *Willett* v. *Carroll*, 13 Md. 459; *Raikes* v. *Ward*, 1 Hare, 445; *Erisman* v. *Lancaster County Poor Directors*, 47 Pa. 509; *Pulpress* v. *African M. E. Church*, 48 Pa. 210; *Carson* v. *Carson*, 1 Wins. Eq. (N. C.) 24; *Davey* v. *Ward*, L. R. 7 Ch. Div. 754.

This court has jurisdiction to enforce the execution of this trust.

Hyde v. *Stone*, 61 U. S. 20 How. 170-175 (15: 874, 875); *Payne* v. *Hook*, 74 U. S. 7 Wall. 425 (19: 260); *Ellis* v. *Davis*, 109 U. S. 485 (27:1006); *Williams* v. *Benedict*, 49 U. S. 8 How. 107 (12:1007); *Bank of Tennessee* v. *Horn*, 58 U. S. 17 How. 160 (15:71); *Yonley* v. *Lavender*, 88 U. S. 21 Wall. 276 (22:536); *Taylor* v. *Carryl*, 61 U. S. 20 How. 583 (15:1028); *Freeman* v. *Howe*, 65 U. S. 24 How. 454 (16:750); *Hook* v. *Payne*, 81 U. S. 14 Wall. 255 (20:889).

Messrs. John A. Stanly and **George R. B. Hayes**, for appellee:

The decree of the probate court was a complete and final adjudication.

Anguisola v. *Arnas*, 51 Cal. 439; *Re Garraud's Estate*, 36 Cal. 279, 280.

The decisions of the courts of a State, as to the construction of its own statutes, are binding on the federal courts.

Shelby v. *Guy*, 24 U. S. 11 Wheat. 367 (6:496); *Christy* v. *Pridgeon*, 71 U. S. 4 Wall. 203, 204 (18: 324, 325); *Johnston* v. *Straus*, 26 Fed. Rep. 69.

On the question of the jurisdiction of the courts of probate, see

Re Verplanck, 91 N. Y. 450; *Riggs* v. *Cragg*, 89 N. Y. 492; *Teed* v. *Morton*, 60 N. Y. 502; *Bascom* v. *Albertson*, 34 N. Y. 584; *Stagg* v. *Jackson*, 1 N. Y. 206; *Dundas' Appeal*, 73 Pa. 474; *Whiteside* v. *Whiteside*, 20 Pa. 473; *McGettrick's Appeal*, 98 Pa. 12; *Shollenberger's Appeal*, 21 Pa. 340; *Tryon* v. *Farnsworth*, 30 Wis. 580-581; *Brook* v. *Chappell*, 34 Wis. 411, 412; *Schaeffner's Appeal*, 41 Wis. 260.

No trust was created by the will in favor of the appellants.

Sale v. *Moore*, 1 Sim. 534; *Meredith* v. *Heneage*, Id. 542; *Macnab* v. *Whitbread*, 17 Beav. 299; *Reeves* v. *Baker*, 18 Beav. 378 *et seq.*; *Fox* v. *Fox*, 27 Beav. 301; *Green* v. *Marsden*, 1 Drewry, 646; *Palmer* v. *Simmonds*, 2 Drewry, 221, 225 *et seq.*; *Webb* v. *Wools*, 2 Sim. N. S. 267-269; *Eade* v. *Eade*, 5 Madd. 118; *Howard* v. *Carusi*, 109 U. S. 734 (27:1092).

Wherever the prior dispositions of the property import absolute and uncontrollable ownership, courts of equity will not create a trust.

2 Story, Eq. Jur. § 1070; *Knight* v. *Knight*, 3 Beav. 148; *Lesesne* v. *Witte*, 5 S. C. 461.

Mr. Justice **Matthews** delivered the opinion of the court:

These appeals bring before us the will of David D. Colton for construction. The question is whether his widow, Ellen M. Colton, by its provisions, takes the whole estate of which he died seised and possessed absolutely in her own right, or whether she takes it charged with a trust enforceable in equity in favor of the com-

plainants, and, if so, to what extent. The language of the will to be construed is as follows: "I give and bequeath to my said wife, Ellen M. Colton, all of the estate, real and personal, [308] of which I shall die seised, possessed, or entitled to. I recommend to her the care and protection of my mother and sister, and request her to make such gift and provision for them as in her judgment will be best."

Before proceeding, however, to a consideration of the will itself, we are met with the objection, interposed by the counsel for the appellee, that the matter of the present controversy has already been finally adjudicated. The proposition is that the decree of the Probate Court of the City and County of San Francisco, distributing the whole of the estate of the testator to the appellee, was a complete and final adjudication as to all parties claiming, as heirs, legatees, or devisees, any interest, legal or equitable, in or to the estate, and is therefore a bar to the present suit. It is contended that, by the law of California, the probate court having jurisdiction over matters relating to the settlements of estates of deceased persons, and, among other matters, to distribute the residue of the estate among the persons who by law are entitled thereto, if a trust is attempted to be created by will, that court must determine how far the attempt is successful, what is the trust, who is the trustee, and who are the beneficiaries, and distribute accordingly.

As there is no plea in bar of the relief sought by the bills, setting up any decree of the probate court to which the appellants were parties, and by which they could be bound, denying to them any interest under the will of the testator, we must look to the bills themselves for the only allegations on that subject. All that is said on the subject in them is that the defendant "continued to discharge the duties as such executrix until about the 18th day of December, A. D. 1879, when, by an order or decree of said probate court, then and there duly made and entered, the whole estate, real and personal, of the said David D. Colton then remaining was distributed to the said defendant, and she was discharged from any further duties as such executrix."

The entire effect of this averment is to show that the defendant had come into possession of the estate as devisee and legatee, as she was clearly entitled to, as soon as the estate was fully administered by her as executrix. The [309] claims insisted on by the complainants are not against her as executrix, but as devisee and legatee; and the trusts alleged to be created by the will do not arise until the widow of the testator comes into possession of the estate as devisee and legatee. Whatever jurisdiction, by the laws of California, its probate court may have been entitled to exercise for the purpose of construing the will as between the widow and the present complainants, there is no averment in the pleadings that it was ever exercised. There is therefore no adjudication on the subject, by the probate court, which has decided the question raised in these suits so as to operate as a bar to their prosecution.

The fundamental and controlling rules for the construction of wills are familiar and well understood. They were well stated by *Chief Justice* Marshall in delivering the opinion of this court in *Smith* v. *Bell*, 31 U. S. 6 Pet. 68 [8: 822], as follows: "The first and great rule in the exposition of wills, to which all other rules must bend, is that the intention of the testator expressed in his will shall prevail, provided it be consistent with the rules of law. [*Davie* v. *Stevens*,] 1 Doug. 322; [*Perrin* v. *Blake*,] 1 W. Bl. 672. This principle is generally asserted in the construction of every testamentary disposition. It is emphatically the will of the person who makes it, and is defined to be 'the legal declaration of a man's intentions which he wills to be performed after his death.' 2 Bl. Com. 499. These intentions are to be collected from his words, and ought to be carried into effect if they be consisted with law. In the construction of ambiguous expressions, the situation of the parties may very properly be taken into view. The ties which connect the testator with his legatees, the affection subsisting between them, the motives which may reasonably be supposed to operate with him and to influence him in the disposition of his property, are all entitled to consideration in expounding doubtful words and ascertaining the meaning in which the testator used them." * * * "No rule is better settled than that the whole will is to be taken together, and is to be so construed as to give effect, if it be possible, to the whole." * * * "Notwithstanding the reasonableness and good sense of this general rule that the intention shall prevail, it has been sometimes disregarded. If the testator attempts to effect that which the [310] law forbids, his will must yield to the rules of law. But courts have sometimes gone further. The construction put upon words in one will has been supposed to furnish a rule for construing the same words in other wills; and thereby to furnish some settled and fixed rules of construction which ought to be respected. We cannot say that this principle ought to be totally disregarded; it should never be carried so far as to defeat the plain intent, if that intent may be carried into execution without violating the rules of law. It has been said truly [*Gulliver* v. *Poynts*], 3 Wils. 141, that cases on wills may guide us to general rules of construction; but unless a case cited be in every respect directly in point, and agree in every circumstance, it will have little or no weight with the court, who always look upon the intention of the testator as the polar star to direct them in the construction of wills." See *Clarke* v. *Boorman*, 85 U. S. 18 Wall. 493, 502 [21: 904, 906].

The object, therefore, of a judicial interpretation of a will is to ascertain the intention of the testator, according to the meaning of the words he has used, deduced from a consideration of the whole instrument and a comparison of its various parts in the light of the situation and circumstances which surrounded the testator when the instrument was framed. These rules of construction, indeed, apply to every written instrument, although in deeds and some other formal documents the long usage of the law has, in certain cases, required the use of technical words and phrases to accomplish particular effects. No technical language, however, is necessary to the creation of a trust, either by deed or by will. It is not necessary

to use the words "upon trust" or "trustee," if the creation of a trust is otherwise sufficiently evident. If it appear to be the intention of the parties, from the whole instrument creating it, that the property conveyed is to be held or dealt with for the benefit of another, a court of equity will affix to it the character of a trust, and impose corresponding duties upon the party receiving the title, if it be capable of lawful enforcement. No general rule can be stated that will determine when a conveyance will carry with it the whole beneficial interest, [311] and when it will be construed to create a trust; but the intention is to be gathered in each case from the general purpose and scope of the instrument. Perry, Tr. §§ 82, 151, 158; *Creswell* v. *Jones*, 68 Ala. 420.

The question, upon the language of the present will, which constitutes the point in dispute is whether the testator intended to charge his estate in the hands of his widow with a trust in favor of his mother and sister, or whether he intended his widow to take the estate free from any obligation of that character, at liberty to disregard the recommendation and request, and to make provision for his mother and sister or not out of property absolutely her own, as she might choose.

It is argued against the establishment of the trust in favor of the complainants that it is of the nature of those called "precatory trusts," founded originally, in the earlier decisions of courts of equity in England and in this country, upon strained, artificial, and inappropriate interpretations of the language of testators, whereby their real intentions were perverted and defeated, according to a rule which is no longer favored as an existing doctrine of equity, and which is excluded by the express terms of the Civil Code of California, according to which the will in this case must be construed. That Code provides that "a will is to be construed according to the intention of the testator. Where his intention cannot have effect to its full extent, it must have effect as far as possible." § 1317. "In case of uncertainty arising upon the face of a will as to the application of any of its provisions, the testator's intention is to be ascertained from the words of the will, taking into view the circumstances under which it was made, exclusive of his oral declarations. § 1318. "All the parts of a will are to be construed in relation to each other, and so as, if possible, to form one consistent whole; but where several parts are absolutely irreconcilable, the latter must prevail." § 1321. "A clear and distinct devise or bequest cannot be affected by any reasons assigned therefor, or by any other words not equally clear and distinct, or by inference or argument from other parts of the will, or by the inaccurate recital of or reference to its contents in another [312] part of the will." § 1322. "The words of a will are to be taken in their ordinary and grammatical sense, unless a clear intention to use them in another sense can be collected, and that other can be ascertained." § 1324. "The words of a will are to receive an interpretation which will give to every expression some effect, rather than one which will render any of the expressions inoperative." § 1325. "Technical words are not necessary to give effect to any species of disposition by a will." § 1328. And by section 1319 it is provided that these rules are to be observed "unless an intention to the contrary clearly appears." In relation to trusts, the Code also provides, in respect to real property, that they must be either in writing or created by operation of law (§ 852); subject to which condition, it is further provided that "a voluntary trust is created as to the trustor and beneficiary by any words or acts of the trustor indicating with reasonable certainty: 1, an intention on the part of the trustor to create a trust; and, 2, the subject, purpose, and beneficiary of the trust." § 2221. It will be observed, however, that these statutory provisions of the State of California are merely declaratory of pre-existing law, and are perfectly consistent, if not identical, with the rules of construction already noticed as of controlling and universal application.

As to the doctrine of precatory trusts, it is quite unnecessary to trace its origin, or review the numerous judicial decisions in England and in this country which record its various applications. If there be a trust sufficiently expressed and capable of enforcement by a court of equity, it does not disparage, much less defeat it, to call it "precatory." The question of its existence, after all, depends upon the intention of the testator as expressed by the words he has used, according to their natural meaning, modified only by the context and the situation and circumstances of the testator when he used them. On the one hand, the words may be merely those of suggestion, counsel, or advice, intended only to influence, and not to take away, the discretion of the legatee growing out of his right to use and dispose of the property given as his own. On the other hand, the language employed may be imperative in fact, though not in form, con- [313] veying the intention of the testator in terms equivalent to a command, and leaving to the legatee no discretion to defeat his wishes, although there may be a discretion to accomplish them by a choice of methods, or even to define and limit the extent of the interest conferred upon his beneficiary.

"All the cases upon a subject like this," said *Lord Chancellor* Cottenham in *Shaw* v. *Lawless*, 5 Clark & F. 129, 153, "must proceed on a consideration of what was the intention of the testator." In *Williams* v. *Williams*, 1 Sim. (N. S.) 358, 369, *Vice-Chancellor* Cranworth said: "The point really to be decided in all these cases is whether, looking at the whole context of the will, the testator has meant to impose an obligation on his legatee to carry his express wishes into effect, or whether, having expressed his wishes, he has meant to leave it to the legatee to act on them or not at his discretion." And referring to rules for ascertaining this intention sought to be deduced from the numerous decisions on the subject, he adds: "I doubt if there can exist any formula for bringing to a direct test the question whether words of request or hope, or recommendation are or are not to be construed as obligatory."

In *Briggs* v. *Penny*, 3 MacN. & G. 546, *Lord Chancellor* Truro stated the same rule with a little more particularity. He said: "I conceive the rule of construction to be that words accompanying a gift or bequest expressive of

confidence or belief or desire or hope that a particular application will be made of such bequest will be deemed to import a trust upon these conditions: (1) that they are so used as to exclude all option or discretion in the party who is to act as to his acting according to them or not; (2) the subject must be certain; and (3) the objects expressed must not be too vague or indefinite to be enforced." The most recent declarations of the English courts of equity do not modify this statement of the law. *Lambe* v. *Eames*, L. R. 6 Ch. App. Cas. 597; *Re Hutchinson and Tenant*, L. R. 8 Ch. Div. 540; *Re Adams and the Kensington Vestry*, L. R. 27 Ch. Div. 394, 406.

The existing state of the law on this question [314] as received in England, and generally followed in the courts of the several States of this Union, is well stated by Gray, *Ch. J.*, in *Hess* v. *Singler*, 114 Mass. 56, 59, as follows: "It is a settled doctrine of courts of chancery that a devise or bequest to one person, accompanied by words expressing a wish, entreaty, or recommendation that he will apply it to the benefit of others, may be held to create a trust, if the subject and the objects are sufficiently certain. Some of the earlier English decisions had a tendency to give to this doctrine the weight of an arbitrary rule of construction. But by the later cases in this, as in all other questions of the interpretation of wills, the intention of the testator, as gathered from the whole will, controls the court; in order to create a trust, it must appear that the words were intended by the testator to be imperative; and when property is given absolutely and without restriction, a trust is not to be lightly imposed, upon mere words of recommendation and confidence."

In the previous case of *Warner* v. *Bates*, 98 Mass. 274, *Chief Justice* Bigelow vindicated the soundness and the value of this rule in the following commentary. He said: "The criticisms which have been applied to this rule by text writers and in judicial opinions will be found to rest mainly on its applications in particular cases, and not to involve a doubt of the correctness of the rule itself as a sound principle of construction. Indeed, we cannot understand the force or validity of the objections urged against it if care is taken to keep it in subordination to the primary and cardinal rule that the intent of the testator is to govern, and to apply it only where the creation of a trust will clearly subserve that intent. It may sometimes be difficult to gather that intent, and there is always a tendency to construe words as obligatory in furtherance of a result which accords with a plain moral duty on the part of a devisee or legatee, and with what it may be supposed the testator would do if he could control his action. But difficulties of this nature, which are inherent in the subject-matter, can always be readily overcome by bearing in mind, and rigidly applying in all such cases, the test that to create a trust it must [315] clearly appear that the testator intended to govern and control the conduct of the party to whom the language of the will is addressed, and did not design it as an expression or indication of that which the testator thought would be a reasonable exercise of a discretion which he intended to repose in the legatee or devisee. If the objects of the supposed trust are certain and definite; if the property to which it is to attach is clearly pointed out; if the relations and situation of the testator and the supposed *cestuis que trust* are such as to indicate a strong interest and motive on the part of the testator in making them partakers of his bounty; and above all, if the recommendatory or precatory clause is so expressed as to warrant the inference that it was designed to be peremptory on the donee, the just and reasonable interpretation is that a trust is created, which is obligatory and can be enforced in equity against the trustee by those in whose behalf the beneficial use of the gift was intended."

In the light of this rule, as thus stated and qualified, we proceed to ascertain the intention of the testator in this will as to the point in controversy. In the first place, the language of the bequest to his wife is undoubtedly sufficient to convey to her at his death the whole estate absolutely and without conditions. The will says: "I give and bequeath to my said wife, Ellen M. Colton, all of the estate, real and personal, of which I shall die seised or possessed or entitled to." If this stood alone there could be no controversy as to the nature and extent of her title. But it does not stand alone, and it does not contain any expressions which necessarily anticipate or limit any subsequent provisions affecting it. It does not say expressly that she shall have the absolute right to use, for her own benefit exclusively, or the absolute right to dispose of, the estate which he gives to her. Her right to use and her power to dispose are merely the legal incidents of the title conveyed by the clause considered, as unqualified by its context. But the bequest to the wife is immediately followed by the clause which is the subject of the present contention. In direct connection with his gift to his wife the testator adds: "I recommend to her the care and protection of my mother and sister, and request [316] her to make such gift and provision for them as in her judgment will be best." It may well be admitted that the recommendation of the testator to his wife to care for and protect his mother and sister when they should be deprived of the care and protection which he could personally secure to them while he lived is not sufficient of itself to create a trust, and attach it to the estate of his widow, so as to be capable of enforcement. It is certainly the expression of a strong desire on the part of the testator for a continuance of care and protection by his legatee over his mother and sister, but, considered by itself, cannot be construed as creating in them an enforceable right to a beneficial interest in the estate given to his widow. It is rather a personal charge than a property charge. But he did not leave it so. The testator adds: "And requests her to make such gift and provision for them as in her judgment will be best." It is immaterial in the construction of this language to determine whether the word "gift" means a donation from the legatee or from the testator, for it is also to be a "provision." It is this which he requests his widow to make, out of that provision which the testator made directly for her, consisting of the whole of his estate, real and personal. The entire estate bequeathed to his

widow is thus affected by this request. Is that request equivalent to a command, or is it a mere solicitation which after his death she may reject and disregard without violating the terms of his will and the conditions upon which she accepted her estate under it? Is there anything in the language of the clause itself, in its context, or in the circumstances and situation of the testator when he framed it, to indicate an intention on his part to confer upon his widow the authority to accept his property, and at the same time to refuse to use it according to his request? Undoubtedly he gives to her some discretion on the subject; the gift and provision which he requests for his mother and sister is to be such as in her judgment will be best. It is to be such as will be best for them, having regard to all the circumstances, both of their necessities and the amount and sufficiency of the estate; and this proportion, which is to [317] constitute what shall be best, is to be determined by the widow in the exercise of her judgment. It is her judgment that is to be called into exercise, and this excludes caprice, whim, and every merely arbitrary award; but whatever the judgment may be, and whatever discretion is involved in its exercise, it operates only upon the nature, form, character, and amount of the gift and provision intended for them. The fact of a gift and provision is presupposed, and stands on its own ground. Her judgment is not invoked as to that. The only ambiguity, in respect to whether there shall be a gift and provision or not, resides in the single word "request." Does that mean a wish of the testator which he intended to be fulfilled out the means which he had furnished to make it effectual, or does it mean a posthumous petition which the testator understood himself as addressing to the favor and good will of his sole legatee?

The situation of the testator at the time he framed these provisions is to be considered. He made his will October 8, 1878; he died the next day. It may be assumed that it was made in view of impending dissolution, in the very shadow of approaching death. There is room enough for the supposition that by this necessity the contents of his will were required to be brief; the conception of the general idea to give everything to his wife was simple and easily expressed, and capable of covering all other intended dispositions. The time and the circumstances, perhaps, disabled him from specifying satisfactory details concerning a provision for his mother and his sister, but he did not forget that he owed them care and protection. That care and protection, therefore, he recommended to his wife as his legatee; but he was not satisfied with that; he wished that care and protection to be embodied in a gift and provision for them out of the estate which he was to leave to her. He therefore requested her to make it, and that request he addressed to his legatee and principal beneficiary as expressive of his will that a gift and provision for his mother and sister should come out of it. His legacy to them was part of his legacy to her. All other particulars, as to its form and amount, he was willing to leave, and did leave, to be determined by his widow in her judg- [318] ment of what would be best for his beneficiaries, so as to insure them that care and protection for which he was providing.

The substance of the bequest was his own; the form of it, shaped only by the declared purpose of his bounty, he was willing to leave to the judgment of his wife. The alternative that such discretion should assume the power to disappoint his dispositions evidently was not present in his thoughts, as it is not implied in his words.

The language of the testator immediately succeeding that under consideration throws some light on the meaning of the words in dispute. He says: "I also request my dear wife to make such provision for my daughter Helen, wife of Crittenden Thornton, and Carrie, as she may in her love for them choose to exercise." These were the daughters of the wife as well as of the testator, as is to be inferred from the fact that he refers the whole subject of any provision for them to her love, and the provision which he requests in their behalf is to be, not such "as in her judgment will be best," but only such "as she may in her love for them choose to exercise," leaving the whole question of a provision subject to the exercise of the legatee's choice, which the testator was quite willing to adopt as the dictate of the love of a mother for her children.

It is also to be assumed that the circumstances and situation of his mother and sister were remembered by the testator in the act of making his will; that they were separated from his personal care by a wide distance; that his mother was a widow, and had nearly attained the age of three score years and ten; that even before the death of his father her health was feeble, and, that since, she had been an invalid, enduring much sickness and suffering, requiring constant medical attendance, and the nursing and care of her daughter, who had always resided with her; that except the lot in Greenwood cemetery, where her husband was buried, she owned no real estate, and had no income except the interest on $15,000, which had been advanced to the testator himself by his father as a loan many years previously, and on the income from which the mother and daughter were obliged, with great economy and self-denial, to maintain themselves in very straitened circumstances. A recollection of their [319] necessities, as well as natural love and affection, must have inspired that sentence of his will by which the testator recommended to his widow the care and protection of his mother and sister, giving commanding weight and solemnity to the accompanying request "to make such gift and provision for them as in her judgment will be best;" for he also well knew that such a provision, sufficient for their comfort and independence, would not sensibly diminish the abundance of the legacy to his wife out of which it must issue.

It is an error to suppose that the word "request" necessarily imports an option to refuse, and excludes the idea of obedience as corresponding duty. If a testator requests his executor to pay a given sum to a particular person, the legacy would be complete and recoverable. According to its context and manifest use, an expression of desire or wish will often be equivalent to a positive direction, where

that is the evident purpose and meaning of the testator; as where a testator desired that all of his just debts, and those of a firm for which he was not liable, should be paid as soon as convenient after his decease, it was construed to operate as a legacy in favor of the creditors of the latter. *Burt* v. *Herron*, 66 Pa. 400. And in such a case as the present it would be but natural for the testator to suppose that a request which, in its terms, implied no alternative, addressed to his widow and principal legatee, would be understood and obeyed as strictly as though it were couched in the language of direction and command. In such a case, according to the phrase of *Lord* Loughborough in *Malim* v. *Keigley*, 2 Ves. Jr. 333, 529, "the mode is only civility."

But it is also argued that the trust sought to be established under this will in favor of the complainants is incapable of execution by reason of the uncertainty as to the form and extent of the provision intended, and because it involves the exercise of discretionary power on the part of the trustee, which a court of equity has no rightful authority to control. We have seen that whatever discretion is given by the will to the testator's widow does not [320] affect the existence of the trust. That discretion does not involve the right to choose whether a provision shall be made or not; nor is there anything personal or arbitrary implied in it. It is to be the exercise of judgment directed to the care and protection of the beneficiaries, by making such a provision as will best secure that end. There is nothing in this left so vague and indefinite that it cannot, by the usual processes of law, be reduced to certainty. Courts of common law constantly determine the reasonable value of property sold, where there is no agreement as to price; and the judge and jury are frequently called upon to adjudge what are necessaries for an infant, or reasonable maintenance for a deserted wife. The principles of equity and the machinery of its courts are still better adapted to such inquiries. In the exercise of their discretion over trusts and trustees, it is a fundamental maxim that no trust shall fail for want of a trustee; and where the trustee appointed neglects, refuses, or becomes incapable of executing the trust, the court itself in many cases will act as trustee. In *Thorp* v. *Owen*, 2 Hare, 607, Wigram, V. C., said: "Whatever difficulties might originally have been supposed to exist in the way of a court of equity enforcing a trust the extent of which was ascertained, the cases appear clearly to decide that a court of equity can measure the extent of interest which an adult, as well as an infant, takes under a trust for his support, maintenance and advancement, provision, or other like indefinite expression, applicable to a fund larger, confessedly, than the party entitled to support, maintenance or advancement can claim, and some interest in which is given to another person." And in *Foley* v. *Parry*, 2 Myl. & K. 138, where the words of a will were "and it is my particular wish and request that my dear wife and A. will superintend and take care of the education of D. so as to fit him for any respectable profession or employment," it was held that a charge was created on the interest taken by the testator's widow which could be made effectual by a court of equity.

It is quite true that where the manner of executing a trust is left to the discretion of trustees, and they are willing to act, and there is no *mala fides*, the court will not ordinarily control their discretion as to the way in which [321] they exercise the power; so that if a fund be applicable to the maintenance of children at the discretion of trustees, the court will not take upon itself, in the first instance, to regulate the maintenance, but will leave it to the trustees. But the court will interfere wherever the exercise of the discretion by the trustees is infected with fraud or misbehavior, or they decline to undertake the duty of exercising the discretion, or generally where the discretion is mischievously and erroneously exercised, as if a trustee be authorized to lay out money upon government, or real or personal security, and the trust fund is outstanding upon any hazardous security. Lewin, Trusts, 4th Eng. ed. chap. 20, §§ 2, 402, 403.

In the case of *Costabadie* v. *Costabadie*, 6 Hare, 410, 414, *Vice Chancellor* Sir James Wigram said: "If the gift be subject to the discretion of another person, so long as that person exercises a sound and honest discretion, I am not aware of any principle or any authority upon which the court should deprive the party of that discretionary power. Where a proper and honest discretion is exercised, the legatee takes all that the testator gave or intended that he should have; that is, so much as in the honest and reasonable exercise of that discretion he is entitled to. That is the measure of the legacy." But it is always for the court eventually to say, when called upon, whether the discretion has been either exercised at all, or exercised honestly and in good faith. *Re Hodges, Davey* v. *Ward*, L. R. 7 Ch. Div. 754. Plainly, if the trustee refuses altogether to exercise the discretion with which he is invested, the trust must not on that account be defeated, unless by its terms it is made dependent upon the will of the trustee himself.

On the whole, therefore, our conclusion is that each of the complainants in these bills is entitled to take a beneficial interest under the will of David D. Colton, to the extent, out of the estate given by him to his wife, of a permanent provision for them during their respective lives, suitable and sufficient for their care and protection, having regard to their condition and necessities and the amount and value of the fund from which it must come. It will [322] be the duty of the court to ascertain after proper inquiry, and thereupon to determine and declare, what provision will be suitable and best under the circumstances, and all particulars and details for securing and paying it.

The decrees of the Circuit Court are accordingly reversed, and the causes remanded, with directions to overrule the demurrers to the several bills, and to take further proceedings therein not inconsistent with this opinion; and it is so ordered.

[212] UNITED STATES, *Plff. in Err.*,
v.
JOHN F. BROADHEAD ET AL.

SAME *v.* SAME.

(See S. C. Reporter's ed. 212-213.)

Jurisdictional amount—suit on bond—Act of 1875.

1. Upon a bond given to appear in a United States Court to answer to an indictment, in which the penalty is $5,000, no interest can be recovered; nor can any recovery be had beyond the amount of the penalty, except for costs.
2. Therefore this court has no jurisdiction of a suit upon such bond.
3. Section 3 of the Act of Feb. 16, 1875 (18 Stat. at L. 315), fixing the amount necessary to give jurisdiction to this court of writs of error from the circuit court, at a sum in excess of $5,000, applies to the United States, except in cases enumerated in section 699, Revised Statutes.

[Nos. 233, 234.]
Argued April 18, 1888. Decided April 30, 1888.

IN ERROR to the Circuit Court of the United States for the District of California, to review judgments in favor of defendants in suits brought upon bonds, given by defendants as principal and sureties, conditioned for the appearance in the District Court of the United States to answer to indictments. *Writs of error dismissed.*

The facts are stated in the opinion.

Mr. **Wm. A. Maury,** *Asst. Atty-Gen.*, for plaintiff in error.

(No counsel for defendant in error.)

Mr. Justice **Miller** delivered the opinion of the court:

These cases are suits brought upon two bonds given by John F. Broadhead and his sureties, conditioned for his appearance in the District Court of the United States for the [213] District of California, to answer two separate indictments for making and forging checks on the Assistant Treasurer of the United States at San Francisco. The penalty of each of these bonds was $5,000, and, according to well settled principles, no interest can be recovered in such a suit; nor can any recovery be had beyond the amount prescribed in these instruments, except for costs.

Section 3 of the "Act to facilitate the disposition of cases in the Supreme Court of the United States, and for other purposes," approved February 16, 1875, 18 Stat. at L. 315, fixing the amount necessary to give jurisdiction to this court of writs of error from the circuit courts at a sum in excess of $5,000, applies to the United States as well as to other parties, except in the cases enumerated in section 699 of the Revised Statutes. None of these exceptions apply to the present cases.

It was attempted in *United States* v. *Hill*, 123 U. S. 681 [31: 275], to establish the proposition that that case was for the enforcement of a revenue law, and therefore came within the exceptions specified. It was, however, overruled by this court, and the opinion in that case forbids the idea that these cases can be treated as an exception to the general rule.

As the Act of 1875, above cited, requires that there shall be an amount in controversy, exclusive of costs, exceeding $5,000, and as no such recovery can be had in the cases now under consideration, *the writs are dismissed.*

GEORGE BARKER, Admr. of HENRY O. JONES, Deceased, ET AL., *Appts.*, [213]
v.
WALTER CRAIG.

(See S. C. "*Jones' Admr.* v. *Craig*," Reporter's ed. 213-216.)

Final decree—what is not.

An order, made upon demurrer to a bill in chancery, setting forth the circumstances under which the bill is to be dismissed or the relief granted, which circumstances and the sum therein required to be paid are matters yet to be determined, is not a final decree; and this court has no jurisdiction of an appeal therefrom.

[No. 235.]
Submitted April 18, 1888. Decided April 30, 1888.

APPEAL from an order of the Circuit Court of the United States for the District of Nebraska, in a suit to remove a cloud upon title, which order allowed an injunction, restraining the prosecution of an action in ejectment, upon the plaintiff bringing into court the amount of a note and mortgage and the interest thereon, and of certain taxes and interest; but if plaintiff should fail to do so, order that the suit be dismissed. *Appeal dismissed.*

The facts are stated in the opinion.

Messrs. **George E. Pritchett** and *Ambrose & Munn* for appellants:

The instruments constituted a mortgage.

McGann v. *Marshall*, 7 Humph. 121; *Baldwin* v. *Jenkins*, 23 Miss. 206; *Dey* v. *Dunham*, 2 Johns. Ch. 182; *S. C.* 15 Johns. 555; *Jackson* v. *Green*, 4 Johns. 186; *Cooper* v. *Whitney*, 3 Hill, 95 and other authorities cited in 2 Lead. Cas. Eq. (Hare & W.'s Notes,) 626; *Montgomery* v. *Chadwick*, 7 Iowa, 114; *Hallesy* v. *Jackson*, 66 Ill. 189; *Shillaber* v. *Robinson*, 97 U. S. 68 (24: 967); *Arrington* v. *Liscom*, 34 Cal. 365.

Twenty years is a bar to a bill to redeem.

Dexter v. *Arnold*, 1 Sumn. 109; *Skinner* v. *Smith*, 1 Day, 124; *Jarvis* v. *Woodruff*, 22 Conn. 548.

Mr. **W. J. Connell,** for appellee.

Mr Justice **Miller** delivered the opinion of [214] the court:

The appellants here, Henry O. Jones and John Jort, brought their bill in chancery against Walter Craig, the defendant, in the Circuit Court of the United States for the District of Nebraska.

The object of the bill was to remove a cloud upon the title to certain lands. The defendant had brought an action of ejectment to recover their possession, and, having a *prima facie* title of record upon which he could recover, this bill was filed for the purpose of setting up an equitable defense. Thereupon a temporary injunction was allowed, restraining Craig from prosecuting his action of ejectment until the chancery suit was decided.

The allegation of the bill was that a deed under which the plaintiff in the ejectment suit asserted title was executed as a mortgage, with a written contract of defeasance when the money loaned should be repaid. To this bill a demurrer was filed, upon which the court made an order in the following language:

"If the plaintiff will amend bill, and bring into court proper amount of money to redeem and pay taxes,—all of same to bear interest from time money was due, and interest on taxes from date of payment at present rate of interest,—then perpetual injunction can be allowed. Cost of both suits to abide further order."

Afterwards the plaintiffs did filed an amended bill, to which likewise there was a general demurrer. Upon the hearing of that demurrer the court made the following order:

"Henry O. Jones et al. vs. Walter Craig. } 193—H.

"This cause coming on to be heard upon the demurrer of the defendant to the amended bill of complaint filed herein, and the court being fully advised in the premises, it is ordered that if within fifteen days the plaintiff bring into court the amount of the note and mortgage set forth in the bill of complaint, with interest thereon from the time the note became due, with interest thereon at ten per cent per annum until November 1, 1879, and from November 1, 1879, to date of this order, at seven per cent per annum, together with all taxes paid by defendant upon the land described in said bill, with interest thereon at ten per cent per annum, then the defendant be restrained from the further prosecution of the cause in ejectment set forth in said bill of complaint, and entitled *Walter Craig* v. *Henry O. Jones*; but if the plaintiff shall fail so to do within the time mentioned, the said demurrer to said bill be sustained, and the said bill of complaint be dismissed, and the defendant herein be allowed to proceed with the prosecution of his said action at law. To the ruling and decision of the court the plaintiffs except."

This order, made upon the hearing of the demurrer to a bill in chancery, is wholly irregular.

This court, however, has no jurisdiction of the case as it stands, because the order just cited is not a final decree. Something yet remains to be done in order to make it such, and that action depends upon whether or not the complainants will comply with the order to bring in the sum due on the mortgage. If that order is complied with, then a decree should be made, upon the hypothesis on which the order was made, in favor of the complainants in the bill, and quieting their title. If, however, the [216] money is not brought into court, then, according to the theory of the order, the bill of complaint should be dismissed. But, even assuming the right of the court to make the order, as well as its validity, the circumstances under which the bill of complaint is to be dismissed or the relief granted to the complainants named therein, and the sum to be paid, are matters which are yet to be determined, which may turn out either one way or the other, and which, when ascertained, will be the foundation for a final decree. There is no final decree as the matter now stands.

The appeal is therefore dismissed, and the case remanded to the Circuit Court for further proceedings.

GEORGE B. CORNELL, *Appt.*, [261]
v.
PAUL WEIDNER.

(See S. C. Reporter's ed. 261-265.)

Reissue of patent—when void.

Where an original patent for improvement in metallic bushings for the bungs of casks, etc., and the first reissue, were distinctly limited to a bushing having a notch to aid in forcing it into place, which notch is an essential element of the invention, a second reissue, obtained nearly seven years later, for a bushing without any such notch, is an unwarrantable enlargement of the supposed invention, and renders the reissue void, as being for a different invention from that claimed in the original patent or in the first reissue.

[No. 240.]

Argued April 19, 1883. Decided April 30, 1883.

APPEAL from a decree of the Circuit Court of the United States for the Eastern District of Michigan, dismissing a bill for the infringement of a second reissue of letters patent. *Affirmed.*

The facts are stated in the opinion.

Messrs. **J. W. Merriam** and *John H. Whipple*, for appellant:

A plea in bar to the whole bill must reduce the issue to a single point.

Beams, Eq. 10; 1 Dan. Ch. 603, note 4; *Rhode Island* v. *Massachusetts*, 39 U. S. 14 Pet. 261 (10:447); *Giant Powder Co.* v. *Safety Nitro Powder Co.* 19 Fed. Rep. 513.

All other defenses except the one made by the plea are cut off.

Walker, Patents, § 605; *Pitts* v. *Hall*, 2 Blatchf. 229; *Blandy* v. *Griffith*, 3 Fish. Pat. Cas. 616.

The bill, so far as it is not contradicted by the plea, is admitted to be true.

Beams, Eq. 48; Story, Eq. Pl. § 694.

The identity of the invention set forth in the original and reissued patents is a matter of legal construction, on a comparison of the two instruments.

Seymour v. *Osborne*, 78 U. S. 11 Wall. 516 (20:33); *Stevens* v. *Pritchard*, 10 Off. Gaz. 505; *Kerosene Lamp Heater Co.* v. *Littell*, 13 Off. Gaz. 1009; *Tucker* v. *Tucker Mfg. Co.* 4 Cliff. 397; *Albright* v. *Celluloid Harness Trimming Co.* 12 Off. Gaz. 228.

A comparison of the two patents, for the purpose of determining the question of identity of invention, requires an interpretation of the original patent in the light of the state of the art.

Eachus v. *Broomall*, 115 U. S. 429 (29:419); *Vance* v. *Campbell*, 66 U. S. 1 Black, 427 (17:168); *Garneau* v. *Dozier*, 102 U. S. 230 (26:183).

The notch in the flange was not an essential feature of the bush invention, but could be left out, and the essential characteristics of the invention remain unaltered.

Carver v. *Braintree Mfg. Co.* 2 Story, 439; *Gong Bell Mfg. Co.* v. *Clark*, 13 Off. Gaz. 275; *Chicago Fruit House Co.* v. *Busch*, 2 Biss. 472; *Morey* v. *Lockwood*, 75 U. S. 8 Wall. 230 (19:389);

Dorsey Harvester Rake Co. v. *Marsh*, 6 Fish. Pat. Cas. 398.

Under the circumstances shown in this case, there was no unjustifiable delay in applying for reissue 8759.

O'Reilly v. *Morse*, 56 U. S. 15 How. 62, 120, 121 (14:601, 626, 627); *Gage* v. *Herring*, 107 U. S. 640 (27:601); *Seymour* v. *McCormick*, 60 U. S. 19 How. 106 (15:562); *Giant Powder Co.* v. *Safety Nitro Powder Co.* 19 Fed. Rep. 512.

The patentee had a right to broaden the claim of the original in the reissue, to make it cover the actual invention.

Odell v. *Stout*, 22 Fed. Rep. 159; *Seymour* v. *Marsh*, 2 Off. Gaz. 675; *Chicago Fruit House Co.* v. *Busch*, 2 Biss. 472; *Miller* v. *Bridgport Brass Co.* 104 U. S. 350 (26:783); *James* v. *Campbell*, Id. 356 (26:786); *Driven Well Cases*, 122 U. S. 40, 71 (30:1064, 1074); *La Baw* v. *Hawkins*, 6 Off. Gaz. 725; *Providence Rubber Co.* v. *Goodyear*, 76 U. S. 9 Wall. 788 (19:566); *Battin* v. *Taggert*, 58 U. S. 17 How. 74 (15:37); *Gong Bell Mfg. Co.* v. *Clark*, 13 Off. Gaz. 275; *Crandal* v. *Parker Carriage Goods Co.* 20 Fed. Rep. 851; *Coburn* v. *Schræder*, 22 Off. Gaz. 1538; *Western Union Tel. Co.* v. *Baltimore & O. Tel. Co.* 25 Fed. Rep. 32, 35, 36; *Thomas* v. *Shoe Machinery Mfg. Co.* 16 Off. Gaz. 542; *Becker* v. *Hastings*, 22 Fed. Rep. 827; *Morey* v. *Lockwood, supra; Brown* v. *Guild*, 90 U. S. 23 Wall. 181 (23:161); *Bennett* v. *Fowler*, 75 U. S. 8 Wall. 445 (19:431); *Marsh* v. *Seymour*, 97 U. S. 348 (24:963); *Dorsey Harvester Rake Co.* v. *Marsh*, 6 Fish. Pat Cas. 387; *Poppenhusen* v. *Falke*, 2 Fish. Pat. Cas. 218-220.

The presumption of the law is in favor of the identity of the original and reissue.

Thomas v. *Shoe Machinery Mfg. Co.* 16 Off. Gaz. 541; *O'Reilly* v. *Morse*, 56 U. S. 15 How. 112 (14:623); *Guidet* v. *Barber*, 5 Off. Gaz. 149; *Bantz* v. *Elsas*, 6 Off. Gaz. 118; *U. S. & Foreign Salamander Felting Co.* v. *Haven*, 8 Dill. 131; *La Baw* v. *Hawkins*, 6 Off. Gaz. 725; *Carver* v. *Braintrees Mfg. Co.* 2 Story, 439; *Allen* v. *Blunt*, 3 Story, 742; *Seymour* v. *Osborne*, 78 U. S. 11 Wall. 544, 545 (20:38, 39); *Smith* v. *Goodyear Dental Vulcanite Co.* 93 U. S. 486 (23:952).

Mr. **George H. Lothrop,** for appellee:

The identity of the invention covered by the original and reissue is to be determined by comparison.

Ball v. *Langles*, 102 U. S. 130 (26:105).

The reissue is for a different invention from the original patent and first reissue.

Giant Powder Co. v. *California Powder Works*, 98 U. S. 138 (25:82); *Swain Turbine & Mfg. Co.* v. *Ladd*, 102 U. S. 412 (26:185); *Johnson* v. *Flushing & N. S. R. R. Co.* 105 U. S. 539 (26:1162); *Coon* v. *Wilson*, 113 U. S. 277 (28:965).

There is no valid excuse for the long delay and this delay is fatal.

Miller v. *Bridgeport Brass Co.* 104 U. S. 350 (26:783); *Mahn* v. *Harwood*, 112 U. S. 354 (28:365); *Swain Turbine & Mfg. Co.* v. *Ladd, supra.*

Mr. Justice **Gray** delivered the opinion of the court:

This was a bill in equity for the infringement of a second reissue of letters patent. When the facts are understood, the case is clear.

[262] The original patent, issued August 29, 1871, No. 118,517, was for an "improvement in metallic bushings for the bungs of casks, etc., and in wrenches for operating the same;" and described the bushing thus: "A tapering thimble or ring of metal, provided with a flange, *b*, at its larger end, and having a screw thread, *c*, on its outer surface, which screw thread is cast on the bushing in the mould, and is capable of immediate use without other finishing. The flange, *b*, is rounded off at its edge, and is provided at some point in its extent with a V-shaped notch, *d*, extending into the screw thread."

It then described the wrench and its mode of operation, as follows: "E represents the wrench bar, consisting of the slotted plate *e* and the shank *f*. The metal of the shank, at its junction with the plate, forms a downward V-shaped projection, *l*, whose point extends forward toward the centre of the plate *e*. F represents a tapering core of metal, adapted to fit the bung bushing, *a*, and secured to the plate *e* by means of the bolt *h* and its nut. This core is made separable from the wrench bar, in order that, by providing a number of cores of different sizes, the same wrench may be used for bushing of different diameters. Provision is also made by the slot *k* for moving the bolt toward the angular projection *l*, which becomes necessary when a smaller core is substituted for a larger one.

"The wrench is applied by inserting the core into the opening through the bushing, and turning it until the projection *l* falls into the notch *d*. By means of the core the bushing is kept steady, and is readily prevented from assuming an oblique position in the bung opening; at the same time the operator is enabled to get a better hold on the bushing than by means of the wrenches in common use, which are apt to slip from their seats when used on such difficult work as turning a rough-cast screw into place."

The single claim was in these words: "What we claim as our invention, and desire to secure by letters patent is:

"The combination, with the notched bung bushing, *a*, of the wrench, consisting of the bar E, having the slotted plate *e* and angular projection *l*, and the removable core F, substantially as specified."

It thus appears that the original patent described a bushing with a V-shaped notch in [263] the flange, and a wrench made with an angular projection to fit that notch, and applied by turning the wrench until the projection fell into the notch; and that all that the patentee claimed as his invention was the combination of the notched bushing with the wrench having a projection to fit it.

On August 6, 1872, the patent was reissued in two divisions, No. 5026 (not in this record) being for the wrench, and No. 5027 being for the bushing, describing it as "an annular ring of metal. This ring is made tapering on both its outer and inner sides, and is screw threaded upon its outer side, by which means the same is secured within the aperture in the cask. This thread may be formed by a suitable tool, or may be formed in the mould, as found most advantageous. The larger end of the said ring is provided with a flange B, the outer surface or periphery of which is made in an ovolo shape, and is provided with a V-shaped notch *d*, which extends inward to a point near the body of the ring. The object of this notch is to allow a suitable wrench, adapted for the purpose, to

engage therewith, whereby the said bushing may be turned into place without the wrench slipping from its seat, as would be the case with a bushing having a smooth surface."

The claim in that reissue was for "the screw-threaded metallic bung bushing, made tapering upon both its outer and inner sides, and provided with the flange B having the V-shaped notch *d*, as and for the purpose described."

The specification and the claim of that reissue, as clearly appears upon its face, both treated the notch in the flange of the bushing as an essential element of the invention. Of the notch in that reissue it may be said, as this court, in a case decided at October Term, 1877, said of the notch described in the reissue for the wrench, that it was "vital in the invention covered by his patent. The notch is the point of engagement between the bushing and the wrench, when the latter, operating as a lever, gives the former its circular motion, and thus forces it home. Without this arrangement such motion could not be communicated, and the desired result produced. Hence its importance in the scheme of the invention." *Schumacher* v. *Cornell*, 96 U. S. 549, 555 [24: 676, 678].

[264] On June 17, 1879, a second reissue, No. 8759, was obtained for the bushing, the material parts of the specification and the claim of which were as follows:

"Our invention relates to bushings for barrels; and consists of a short metallic tube in exterior form in shape of the frustum of a cone, slightly tapering. The outer surface is screw threaded, to adapt it to be screwed forcibly into the bung hole of the barrel, and to be held securely in place by the contact of the surfaces. The larger end of this tube is provided with an annular flange projecting outwardly, and adapted to rest, when the bushing is screwed to its place in the hole of the barrel, snugly upon the outer surface of the stave. The interior surface of the bushing is also made in the form of a frustum of a cone, and tapers uniformly from the exterior or flanged to the inner end of the bushing. This surface is made smooth and unbroken, and extends in such form quite through from one end of the bushing to the other, so that the wooden or compressible plug or bung to which it is adapted may have a ready and unobstructed entrance, and may pass, if necessary, beyond the inner end of the bushing, and have a uniform bearing-surface throughout the entire length of the bushing."

"Having thus described our invention, what we claim as new, and desire to secure by letters patent, is:

"A metallic bushing for the bung holes of barrels, made with a flange adapted to rest on the outer surface of the stave, and with an exterior threaded and an interior smooth surface, both tapering from the flanged to the interior end; said inner surface being unbroken and unobstructed, and tapering uniformly from one end of the bushing to the other, as and for the purpose set forth."

The notch in the flange of the bushing is not mentioned either in the specification or in the claim of this reissue, although it is shown in the accompanying drawings, substantially as it was shown in the drawings of the original patent and of the former reissue.

The original patent and the first reissue having been distinctly limited to a bushing having a notch to aid in forcing it into place, the second [265] reissue, obtained nearly seven years later, for a bushing without any such notch, is an unwarrantable enlargement of the supposed invention, which, according to the now well-settled law, renders the reissue void. *Yale Lock Mfg. Co.* v. *James*, 125 U. S. 447, 464 [31: 807] and cases there cited.

The defendant's plea, that the second reissue was for a different invention from that described or claimed either in the original patent or in the first reissue, was therefore rightly adjudged good by the circuit court, and *the decree dismissing the bill is affirmed.*

PEOPLE OF THE STATE OF CALIFORNIA, *Plffs. in Errs.*, [1]

v.

CENTRAL PACIFIC RAILROAD COMPANY.

SAME, *Plffs. in Errs.*, *v.* SOUTHERN PACIFIC RAILROAD COMPANY.

SAME, *Plffs. in Errs.*, *v.* NORTHERN RAILWAY COMPANY.

SAME, *Plffs. in Errs.*, *v.* CALIFORNIA PACIFIC RAILROAD COMPANY.

SAME, *Plffs. in Errs.*, *v.* CENTRAL PACIFIC RAILROAD COMPANY.

SAME, *Plffs. in Errs.*, *v.* CENTRAL PACIFIC RAILROAD COMPANY.

(See S. C. Reporter's ed. 1-45.)

California railroad assessments—U. S. franchises not taxable—power of Congress to construct railroads.

*1. By the Constitution of California two modes of assessment for taxation are prescribed; one, by a State Board of Equalization; the other, by county boards and local assessors. All property is directed to be assessed in the county, city, etc., in which it is situated, except that the franchise, roadway, roadbed, rails, and rolling stock of any railroad operated in more than one county are to be assessed by the state board and apportioned to the several counties, etc. By an Act of the Legislature the state board is required to include in their assessment steamers engaged in transporting passengers and freights across waters which divide a railroad. This Act was held by the Supreme Court of California, in *San Francisco* v. *Central Pac. R. R. Co.* 63 Cal. 469, to be contrary to the Constitution; and steamboats were held to be assessable by the county board, and not by the state board. This court, following that decision and that of *Santa Clara County* v. *Southern Pac. R. R. Co.* 118 U. S. 394 [30: 118], *holds* that the assessment of the steamers of a railroad company by the state board is in violation of the Constitution of California, and void, and, being inseparably blended with the other property assessed, it makes the whole assessment void.

2. The State Board of Equalization of California having included in their assessment all the franchises of a railroad company, amongst which were franchises, conferred by the United States, of constructing a railroad from the Pacific Ocean across the State as well as across the Territories of the United States, and of taking toll thereon,—*Held*, that the assessment of these franchises was repug-

*Head notes by *Mr. Justice* BRADLEY.

nant to the Constitution and laws of the United States and the power given to Congress to regulate commerce among the several States.

3. Franchises conferred by Congress cannot, without its permission, be taxed by the States.

4. Congress has authority, in the exercise of its power to regulate commerce among the several States, to construct, or authorize individuals or corporations to construct, railroads across the States and Territories of the United States.

[Nos. 660, 661, 662, 663, 664, 1157.]

Argued Jan. 11, 12, 13, 1888. Decided April 30, 1888.

IN ERROR to the Circuit Court of the United States for the Northern District of California, to review judgments in favor of defendants, Railroad Companies, in actions to recover taxes. *Affirmed.*

The facts are fully stated in the opinion.

Messrs. **J. M. Wilson,** and **George A. Johnson,** *Atty-Gen. of California,* and *S. Shellabarger,* for plaintiffs in error:

The State has the right not only to tax according to its discretion, but also to classify property for assessment and taxation.

Union Pac. R. R. Co. v. *Peniston,* 85 U. S. 18 Wall. 5 (21:787); *Williams* v. *Albany County,* 122 U. S. 163, 164 (30:1089); *Kentucky R. R. Tax Cases,* 115 U. S. 321 (29:414); *State R. R. Tax Cases,* 92 U. S. 611 (23-672).

This power of classification is not one that is unlimited.

Cooley, Const. Lim. 175; *Stuart* v. *Palmer,* 74 N. Y. 189; *Wilkinson* v. *Leland,* 27 U. S. 2 Pet. 657, 658 (7:553); *Terrett* v. *Taylor,* 13 U. S. 9 Cranch, 43 (3:650); *Von Hoffman* v. *Quincy,* 71 U. S. 4 Wall. 550 (18:408); *Sinking Fund Cases,* 99 U. S. 719 (25:501).

The assessment is not an attempt to take the property of the defendant without "due process of law."

State R. R. Tax Cases, 92 U. S. 575 (23:663); *McMillen* v. *Anderson,* 95 U. S. 37 (24:335); *Davidson* v. *New Orleans,* 96 U. S. 97 (24:616); *Kentucky R. R. Tax Cases,* 115 U. S. 331 (29:416).

There was notice in the State Constitution that this property would be assessed. The Legislature made provision for such assessment, and for hearing.

Here is not only notice to the Company, but an actual appearance by the Company before the board; this is notice,—"due process of law."

Does the Fourteenth Amendment affect this case?

Strauder v. *West Virginia,* 100 U. S. 306 (25:665); *Ex parte Virginia,* Id. 344 (25:678); *Elk* v. *Wilkins,* 112 U. S. 94 (28:643); *Ins. Co.* v. *New Orleans,* 1 Woods, 87; *Santa Clara County* v. *Southern Pac. R. R. Co.* 118 U. S. 396 (30:118); *Philadelphia Fire Asso.* v. *New York,* 119 U. S. 121 (30:347).

Laws which have received judicial sanction as valid laws must perish if the position of the defense is sustained.

Commonwealth v. *People's Sav. Bank,* 5 Allen, 428; *Illinois Cent. R. R. Co.* v. *McLean County,* 17 Ill. 291; *Monroe County Sav. Bank* v. *Rochester,* 37 N. Y. 366; *Vicksburg, S. & P. R. R. Co.* v. *Dennis,* 116 U. S. 665 (29:770); *Tennessee* v. *Whitworth,* 117 U. S. 129 (29:830); *Ruggles* v. *Kimball,* 12 Mass. 337; *Boody* v. *Watson,* 1 New Eng. Rep. 2, 63 N. H. 320; *Ramsey County* v. *Chicago, M. & St. P. R. Co.* 33 Minn. 537; *Nassau Gaslight Co.* v. *Brooklyn,* 89 N. Y. 409.

This case is not distinguishable from *Thomson* v. *Union Pac. R. R. Co.* 76 U. S. 9 Wall. 579 (19:792); and *Union Pac. R. R. Co.* v. *Peniston,* 85 U. S. 18 Wall. 5 (21:787); *U. S.* v. *Union Pac. R. R. Co.* 98 U. S. 619 (25:156).

A railroad cannot be regarded as mere land; its value depends upon the whole line as a unit.

Union Pac. R. Co. v. *Cheyenne,* 113 U. S. 517 (28:1099); *San Mateo County* v. *Southern Pac. R. R. Co.* 13 Fed. Rep. 725.

Railroad property should be assessed as a unit.

Porter v. *Rockford, R. I. & St. L. R. R. Co.* 76 Ill. 584, 595; *Cincinnati, N. O. & T. P. R. R. Co.* v. *Commonwealth,* 81 Ky. 492; 1 Desty, Tax. pp. 392, 393; *Pacific Hotel Co.* v. *Lieb,* 83 Ill. 606.

So long as the State does not violate the Constitution of the United States, this court can afford no relief against State taxation.

Kelly v. *Pittsburgh,* 104 U. S. 79 (26:658); *State R. R. Tax Cases,* 92 U. S. 575 (23:663); *Kennard* v. *Louisiana,* Id. 480 (23:478); *Davidson* v. *New Orleans,* 96 U. S. 97 (24:616); *Kirtland* v. *Hotchkiss,* 100 U. S. 491 (25:558); *Missouri* v. *Lewis,* 101 U. S. 22 (25:989); *German Nat. Bank* v. *Kimball,* 103 U. S. 732 (26:469).

Defendants are not denied the equal protection of the laws.

Central Pac. R. R. Co. v. *State Equalization Board,* 60 Cal. 59; *Post* v. *Kendall County,* 105 U. S. 669 (26:1205); *Beckman* v. *Skaggs,* 59 Cal. 541; *Stanley* v. *Albany County,* 121 U. S. 545, 550 (30:1002, 1003); *Union Pac. R. R. Co.* v. *Peniston,* 85 U. S. 18 Wall. 30 (21:791); *Kentucky R. R. Tax Cases,* 115 U. S. 336 (29:418); *Delaware R. R. Tax,* 85 U. S. 18 Wall. 231 (21:896); *Chicago, B. & Q. R. R. Co.* v. *Iowa,* 94 U. S. 163 (24:95).

Apportionment of taxation is purely a legislative function.

Milwaukee & M. R. R. Co. v. *Waukesha County,* 9 Wis. 431, note; *Johnson* v. *Roberts,* 102 Ill. 655; *People* v. *Brooklyn,* 4 N. Y. 419; *State* v. *Ogden,* 10 La. Ann. 402; *New Orleans* v. *Kaufman,* 29 La. Ann. 283; *State* v. *Lathrop,* 10 La. Ann. 402; *Missouri River Ft. S. & G. R. R. Co.* v. *Morris,* 7 Kan. 210; *Kittanning Coal Co.* v. *Commonwealth,* 79 Pa. 104, 105; *Vasser* v. *George,* 47 Miss. 713; *Woodbridge* v. *Detroit,* 8 Mich. 274; *Waring* v. *Savannah,* 60 Ga. 97; *Athens* v. *Long,* 54 Ga. 330; *Gatlin* v. *Tarboro,* 78 N. C. 119; Burr. Tax. § 77, pp. 147-159.

The absence of a provision in the State Constitution for an opportunity for parties to be heard in defense of their rights before the State Board of Equalization is not in violation of the Fourteenth Amendment to the Federal Constitution.

Beers v. *People,* 83 Ill. 488; *Hallo* v. *Helmer,* 12 Neb. 93; *Dundy* v. *Richardson County,* 8 Neb. 508; *Gillett* v. *Lyon County Treasurer,* 30 Kan. 166; *McMillen* v. *Anderson,* 95 U. S. 37, 41 (24:335); Cooley, Tax. 238, 246, 169-170; *State* v. *Runyon,* 41 N. J. L. 98; *Kelly* v. *Pittsburgh,* 104 U. S. 79 (26:658); *State R. R. Tax Cases,* 92 U. S. 575 (23:663); *Kennard* v. *Louisiana,* Id. 480 (23:478); *Davidson* v. *New*

Orleans, 96 U. S. 97 (24:616); *Kirtland* v. *Hotchkiss*, 100 U. S. 491 (25:558); *Missouri* v. *Lewis*, 101 U. S. 22 (25:989); *German Nat. Bank* v. *Kimball*, 103 U. S. 732 (26:469).

The claim of a federal franchise.

Thomson v. *Union Pac. R. R. Co.* 76 U. S. 9 Wall. 587 (19:796); *Huntington* v. *Central Pac. R. R. Co.* 2 Sawy. 504; *Union Pac. R. R. Co.* v. *Peniston*, 85 U. S. 18 Wall. 34 (21:792).

What is a special law within the meaning of the constitutional provision?

Hingle v. *State*, 24 Ind. 34; *Heridia* v. *Ayres*, 12 Pick. 344; Potter's Dwarr. Stat. 53; *Toledo, L. & B. R. Co.* v. *Nordyke*, 27 Ind. 95; *Longworth* v. *Evansville*, 32 Ind. 322; *McRoberts* v. *Washburne*, 10 Minn. 23; *Von Phul* v. *Hammer*, 29 Iowa, 222; *State* v. *Squires*, 26 Iowa, 340; *Brown* v. *State*, 23 Md. 503; *State* v. *Baltimore County*, 29 Md. 516; *State* v. *Boone County Ct.* 50 Mo. 317; *People* v. *Bowen*, 30 Barb. 24; *State* v. *Hitchcock*, 1 Kan. 178.

Messrs. **George F. Edmunds, William M. Evarts, Creed Haymond** and *Harvey S. Brown*, for defendant in error:

The Central Pacific Railroad Company is one of the means and instrumentalities employed by Congress to carry into operation the powers granted to the General Government. A tax upon its franchises is, within the meaning of all the authorities, a tax upon the means and instrumentalities of the General Government. Without the express consent of Congress no State can impose such a tax.

Union Pac. R. R. Co. v. *Myers*, 115 U. S. 1 (29:319); *U. S.* v. *Union Pac. R. R. Co.* 91 U. S. 79 (23:228); *Wiseman* v. *McNulty*, 25 Cal. 239; *McCulloch* v. *Maryland*, 17 U. S. 4 Wheat. 421 (4:605); *Union Pac. R. R. Co.* v. *Peniston*, 85 U. S. 18 Wall. 5, 32 (21:787,792); *Osborn* v. *Bank of U. S.* 22 U. S. 9 Wheat. 738, 862, 863 (6:204,233,234); *Weston* v. *Charleston*, 27 U. S. 2 Pet. 449, 466 (7: 481, 487); *Buffington* v. *Day*, 78 U. S. 11 Wall. 127 (20:126); *Wood* v. *Truckee Turnpike Co.* 24 Cal. 486; *Thomas* v. *Armstrong*, 7 Cal. 286; *Munroe* v. *Thomas*, 5 Cal. 470; *Van Brocklin* v. *Tennessee*, 117 U. S. 151 (29:845); *Philadelphia & S. Mail Steamship Co.* v. *Pennsylvania*, 122 U. S. 335 (30:1201).

The Constitution and laws of California, in respect to the taxation of railway corporations, are in violation of the Fourteenth Amendment to the National Constitution, in so far as they require the assessment of their property at its full money value, without making deduction for mortgages covering the property; thus imposing upon defendant unequal burdens, and, to that extent, denying to it the equal protection of the law.

Ah Kow v. *Nunan*, 5 Sawy. 557; *Virginia* v. *Rives*, 100 U. S. 318 (25:669); *Ex parte Virginia*, Id. 339, 346 (25:676,679); *Campbell* v. *Morris*, 3 Harris & McH. 554; *Corfield* v. *Coryell*, 4 Wash. C. C. 371; *Ward* v. *Morris*, 4 Harris & McH. 338; *Wiley* v. *Parmer*, 14 Ala. 632; *Crandall* v. *State*, 10 Conn. 343; *State Bank* v. *Cooper*, 2 Yerg. 599; *Devine* v. *Cook County*, 84 Ill. 592: *Citizens Sav. & Loan Asso.* v. *Topeka*, 87 U. S. 20 Wall. 662 (22:461); *Wilkinson* v. *Leland*, 27 U. S. 2 Pet. 627 (7:542).

The power to alter, amend or repeal is not unlimited; sheer oppression and wrong cannot be inflicted under the guise of an amendment or alteration.

Shields v. *Ohio*, 95 U. S. 324 (24:359); *Sinking Fund Cases*, 99 U. S. 721 (25:502); *New Jersey* v. *Yard*, 95 U. S. 104 (24:352); *Miller* v. *New York & E. R. R. Co.* 21 Barb. 518; *Peik* v. *Chicago & N. W. R. Co.* 94 U. S. 175 (24:98); *Chicago, B. & Q. R. R. Co.* v. *Iowa*, Id. 155 (24:94); *Dodge* v. *Woolsey*, 59 U. S. 18 How. 360 (15:412); *Sage* v. *Dillard*, 15 B. Mon. 340; *Commonwealth* v. *Essex Co.* 13 Gray, 239; *Terrett* v. *Taylor*, 13 U. S. 9 Cranch, 43 (3:650).

The assessment is void because it includes property which the State Board of Equalization had no jurisdiction to assess.

San Francisco v. *Central Pac. R. R. Co.* 63 Cal. 467; *Santa Clara County* v. *Southern Pac. R. R. Co.* 118 U. S. 413 (30: 124).

The taxing power has limitations inherent in the very subject itself.

Cooley, Const. Lim. 36, 37; *Citizens Sav. & Loan Asso.* v. *Topeka*, *supra;* Ang. & Ames, Corp. § 436; 2 Kent, 331, 332; 1 Potter, Law of Corp. § 217, p. 192; *People* v. *Brooklyn*, 6 Barb. 214; *Wilkinson* v. *Leland*, 27 U. S. 2 Pet. 627 (7: 542); *Hatch* v. *Vermont Cent. R. R. Co.* 25 Vt. 49; *Raleigh & G. R. R. Co.* v. *Davis*, 2 Dev. & B. L. 451.

To allow one person to deduct the value of a debt secured by mortgage upon his property, and to deny this right to another, is the equivalent of taxing the latter at a higher rate than the former.

Savings & L. Society v. *Austin*, 46 Cal. 415; *Burke* v. *Badlam*, 57 Cal. 600; *Miller* v. *Heilbron*, 58 Cal. 133; *National Albany Exchange Bank* v. *Wells*, 18 Blatchf. 478; *People* v. *Weaver*, 100 U. S. 543 (25: 706).

A corporation is a person within the meaning of the Fourteenth Amendment.

Santa Clara County v. *Southern Pac. R. R. Co.* 118 U. S. 394 (30: 118); *Central Pac. R. R. Co.* v. *State Board of Equalization*, 60 Cal. 58; *Ah Kow* v. *Nunan*, 5 Sawy. 557; *Virginia* v. *Rives*, 100 U. S. 318 (25: 669); *Ex parte Virginia*, Id. 339, 346 (25: 676, 679).

The citizens of each State shall be entitled to all the privileges and immunities of citizens of the several States.

Campbell v. *Morris*, 3 Harris & McH. 554; *Corfield* v. *Coryell*, 4 Wash. C. C. 371; *Ward* v. *Morris*, 4 Harris & McH. 338; *Wiley* v. *Parmer*, 14 Ala. 632; *Crandall* v. *State*, 10 Conn. 343; *Ward* v. *Flood*, 48 Cal. 50.

An assessment is of the very essence of taxation.

Burr. Tax. 194; Cooley, Tax. 244, 245; Hill. Tax. 290, 291; *People* v. *Hastings*, 29 Cal. 451.

There must be uniformity in the mode of assessment.

Knowlton v. *Rock County*, 9 Wis. 410; *Exchange Bank* v. *Hines*, 3 Ohio St. 15; *People* v. *Whyler*, 41 Cal. 351.

What is a general law?

Potter's Dwarr. Stat. 52; Sedg. Stat. & Const. L. 30; Smith, Const. L. § 795, p. 913; *Desmond* v. *Dunn*, 55 Cal. 252; *Vanzant* v. *Waddel*, 2 Yerg. 268; *Wally* v. *Kennedy*, Id. 554; *State Bank* v. *Cooper*, Id. 599; *Devine* v. *Cook County*, 84 Ill. 592.

Congress may select its means or instrumentalities.

McCulloch v. *Maryland*, 17 U. S. 4 Wheat. 316, 421 (4: 579, 605); *Union Pac. R. R. Co.* v. *Peniston*, 85 U. S. 18 Wall. 32 (21: 792).

The State cannot destroy the agent selected. *Osborn* v. *Bank of U. S.* 22 U. S. 9 Wheat. 738 (6: 204); *Weston* v. *Charleston*, 27 U. S. 2 Pet. 466 (7: 487).

The power to tax is the power to destroy. *Dobbins* v. *Erie County*, 41 U. S. 16 Pet. 435 (10: 1022); *U. S.* v. *Union Pac. R. R. Co.* 91 U. S. 79 (23: 228); *Union Pac. R. R. Co.* v. *Peniston*, 85 U. S. 18 Wall. 5 (21: 787); *Van Brocklin* v. *Tennessee*, 117 U. S. 151 (29: 845); *Pollard* v. *Hagan*, 44 U. S. 3 How. 225 (11: 571); *Pensacola Tel. Co.* v. *Western Union Tel. Co.* 96 U. S. 6 (24: 708); *San Francisco* v. *Central Pac. R. R. Co.* 63 Cal. 467; *Santa Clara County* v. *Southern Pac. R. R. Co.* 118 U. S. 418 (30: 124).

Mr. Justice **Bradley** delivered the opinion of the court:

These cases are substantially similar to those of *Santa Clara County* v. *Southern Pac. R.R. Co.* and the other cases decided at the same time, and reported in 118 U. S. 394 [30: 118]. It will be unnecessary, therefore, to set out many provisions of the Constitution and laws of the United States and of California, which are involved in the present cases in common with those referred to. The actions were brought by the State of California in the Superior Court for the County of San Francisco, and were re-
[27] moved into the Circuit Court of the United States, where a jury was waived in each case and the causes were tried by the court, whose findings of fact and conclusions of law are contained in the respective records. One of the cases (No. 660 on the docket) was brought against the Central Pacific Railroad Company for the recovery of the state and county taxes due upon the assessment of the company's property made by the State Board of Equalization for the year 1883; said assessment being $18,000,000, and the taxes amounting to $276,865.10, 60 per cent of which was tendered and paid, without prejudice to either party, after the suit was brought. Another case (No. 1157) is an action against the same Company for the taxes of 1884, due upon a like assessment of $24,000,000. A third (No. 664), against the same Company, is for the taxes of 1884, upon an assessment of $22,000,000. No. 661 is a similar action against the Southern Pacific Railroad Company for the taxes of 1883. No. 662 is a similar action against the Northern Railway Company for the taxes of 1883. No. 663 is a similar action against the California Pacific Railroad Company for the taxes of 1883. Tender and payment of 60 per cent of the taxes were made in all the cases except 1157, in which the amount tendered and paid was 50 per cent. Similar defenses were set up in these cases as in the cases reported in 118 U. S. It was claimed, as in those cases, that in making the assessments no deduction was made for the mortgages on the Companies' property, whilst such deduction was made on the property of other citizens, by assessing to the mortgagees the amount of the mortgages as an interest in real estate; thus discriminating against the Company, and denying to it the equal protection of the laws, contrary to the Fourteenth Amendment of the Constitution. It was also alleged in defense that the Board of Equalization included in the assessments a valuation of rights, franchises and property which they had no authority to assess; as, for example, franchises granted to the companies by the United States, and ferryboats, fences and other property subject to be assessed by the local county boards and not by the state board; and that the assessments were for aggregate amounts, not showing on their face what part of the valuation represented the property illegally included [28] therein; thus rendering the entire assessment in each case void. It was on this latter ground that the judgments for the defendants in the former cases were affirmed. If these defenses, or either of them, are supported by the facts, it is unnecessary for us to decide the question raised under the Fourteenth Amendment of the Constitution. The questions arising under that amendment are so numerous and embarrassing, and require such careful scrutiny and consideration, that great caution is required in meeting and disposing of them. By proceeding step by step, and only deciding what it is necessary to decide, light will gradually open upon the whole subject, and lead the way to a satisfactory solution of the problems that belong to it. We prefer not to anticipate these problems when they are not necessarily involved.

The ground on which it is alleged that the assessments in question were made to include property which the state board had no authority to assess, is to be found in article XIII, sections 9 and 10, of the State Constitution. Those sections are as follows:

"Sec. 9. A State Board of Equalization, consisting of one member from each congressional district in this State, shall be elected by the qualified electors of their respective districts at the general election to be held in the year one thousand eight hundred and seventy-nine, whose term of office, after those first elected, shall be four years, whose duty it shall be to equalize the valuation of the taxable property in the several counties in the State for the purposes of taxation. The controller of State shall be *ex-officio* a member of the board. The boards of supervisors of the several counties of the State shall constitute boards of equalization for their respective counties, whose duty it shall be to equalize the valuation of the taxable property in the county for the purpose of taxation: *Provided*, Such state and county Boards of Equalization are hereby authorized and empowered, under such rules of notice as the county boards may prescribe as to the county assessments, and under such rules of notice as the state board may prescribe as to the action of the state board, to increase or lower the entire assessment roll, or [29] any assessment contained therein, so as to equalize the assessment of the property contained in said assessment roll, and make the assessment conform to the true value in money of the property contained in said roll.

"Sec. 10. All property, except as hereinafter in this section provided, shall be assessed in the county, city, city and county, town, township, or district in which it is situated, in the manner prescribed by law. The franchise, roadway, roadbed, rails, and rolling stock of all railroads operated in more than one county in this State shall be assessed by the State Board

of Equalization at their actual value, and the same shall be apportioned to the counties, cities and counties, cities, towns, townships, and districts in which such railroads are located, in proportion to the number of miles of railway laid in such counties, cities and counties, cities, towns, townships and districts."

The last section shows explicitly that, in regard to a railroad, the state board has power to assess only five things,—the franchise, roadway, roadbed, rails and rolling stock; the county boards are authorized to assess all the rest of the property. If the state board includes in its assessment any more of the railroad property than it is authorized to do, the assessment will be *pro tanto* illegal and void. If the unlawful part can be separated from that which is lawful, the former may be declared void, and the latter may stand; but if the different parts, lawful and unlawful, are blended together in one indivisible assessment, it makes the entire assessment illegal. This is so well settled that it needs no citation of authorities farther than to refer to the opinion of this court in the former cases. 118 U. S. [30:118]. In the present assessments, all parts of the property are blended together and are inseparable. If it be true, therefore, that property not authorized to be included in the assessments is included therein, the assessments must be declared void.

The Legislature of California, in passing laws for carrying out the principles and methods of taxation laid down in the Constitution, has deviated from its words, and has adopted some provisions which would seem to be a departure [30] from it. As the State Board of Equalization in making the assessments in question undertook to follow the law, it will be necessary to examine it. By section 3628 of the Political Code, as amended in 1880, it was provided as follows:

"The franchise, roadway, roadbed, rails, and rolling stock of all railroads operated in more than one county in this State shall be assessed by the State Board of Equalization as hereinafter provided for. Other franchises, if granted by the authorities of a county, city, or city and county, must be assessed in the county, city, or city and county within which they were granted; if granted by any other authority, they must be assessed in the county in which the corporations, firms, or persons owning or holding them have their principal place of business. All other taxable property shall be assessed in the county, city, city and county, town, township, or district in which it is situated. * * * The assessor must, between the first Mondays of March and July in each year, ascertain the names of all taxable inhabitants, and all property in his county subject to taxation, except such as is required to be assessed by the State Board of Equalization, and must assess such property to the person by whom it was owned or claimed, or in whose possession or control it was at 12 o'clock of the first Monday next preceding."

By section 3665 of the same Code, as amended by the Act of March 9, 1883, it is, amongst other things, provided as follows:

"The State Board of Equalization must meet at the state capitol on the first Monday in August, and continue in open session from day to day, Sundays excepted, until the third Monday in August. At such meeting the board must assess the franchise, roadway, roadbed, rails, and rolling stock of all railroads operated in more than one county. Assessment must be made to the corporation, person, or association of persons owning the same, and must be made upon the entire railway within the State, and must include the right of way, bridges, culverts, wharves, and moles upon which the track is laid, and all steamers which are engaged in transporting passengers, freights, and passenger and freight cars across waters which divide [31] the road. The depots, stations, shops, and buildings erected upon the space covered by the right of way are assessed by the assessor of the county wherein they are situate. Within ten days after the third Monday of August the board must apportion the total assessment of the franchise, roadway, roadbed, rails, and rolling stock of each railway to the counties, or cities and counties, in which such railway is located, in proportion to the number of miles of railway laid in such counties and cities and counties."

Here, it will be perceived, that the Legislature undertakes to define what things are, and what are not, comprised within the five categories of railroad property assessable by the state board, and declares that they include not only the entire railway within the State, the right of way, bridges and culverts, but also the "wharves and moles upon which the track is laid, and all steamers which are engaged in transporting passengers, freights, and passenger and freight cars across waters which divide the road." This is clearly an enlargement of the terms of the Constitution. Steamers, at least, are not, and have been held by the Supreme Court of California not to be, embraced in the five categories.

Now, one of the grounds of defense set up by the Central Pacific Railroad Company in Nos. 660 and 1157, by the Northern Railway Company in No. 662, and by the California Pacific Railroad Company in No. 663, is, that the value of their steam ferryboats was blended by the State Board of Equalization with the other values contained in the assessments. The Central Pacific Company, in its answers (and the others contain similar averments), says:

"The western terminus of the said railroad of defendant is in the City of San Francisco, on the west side of the Bay of San Francisco. The distance across said bay is five miles, and the whole thereof is part of the navigable waters of said bay. The cars of the Company are transported from the end of the railroad track of said road, on the eastern side of said bay, to the end of the railroad track on the western side of said bay, on steam ferryboats belonging to the defendant, built, owned, and constructed for that purpose, and are of great value. For more [32] than four years past the defendant has been the owner of two steam ferryboats, one of the tonnage of 1,566 tons and one of the tonnage of 1,012 tons, and during the whole of that time has used said boats for the purposes aforesaid. Said boats now are, and for more than four years last past have been, of a class which are by law required to be registered, and now are, and for more than four years last past have been, duly registered and enrolled in the City and County of San Francisco, State of California.

"The State Board of Equalization, in making said pretended assessment of the said roadway, roadbed, rails, and rolling stock of defendant, did willfully and designedly include in the valuation thereof the value of said boats; and the value of said boats is blended in said pretended assessment with the value of said roadway, roadbed, rails, and rolling stock; and there is no means by which such value can be separated from the valuation placed by said board upon said roadway, roadbed, rails, and rolling stock, or either of them."

This allegation is sustained by the court below in its findings of facts in the cases referred to. The finding in 660, and substantially the same in the other cases, is as follows:

"That on the 18th day of August, 1883, the State Board of Equalization of the State of California, pretending to act under and by virtue of the powers conferred upon it by section 10 of article XIII of the Constitution of the State of California, did make a pretended assessment, for the purposes of taxation for the fiscal year of said State then next ensuing, upon the franchise, roadway, roadbed, rails, and rolling stock of said railroad, against defendant. Said pretended assessment was not made separately upon the franchise, roadway, roadbed, rails, and rolling stock, or any properties of said railroad, but all of said property was blended together in making said assessment, which assessment was then and there so entered upon the minutes of said board. Said assessment is the assessment upon which the several taxes mentioned in the complaint herein are based, and no other assessment than the aforesaid was ever made of said property or any part thereof for said fiscal year. Said assessment included all [33] property and kinds of property mentioned in section 3665 of the Political Code of California, as amended March 9, 1883, except depots, stations, shops, and buildings erected upon the space covered by the right of way, which last-mentioned property was assessed, as provided in said section, by local assessors."

This is a clear affirmation of the allegation of the answer. Section 3665 of the Political Code, as amended March 9, 1883, requires the State Board of Equalization to include in their assessment of railroad property "all steamers which are engaged in transporting passengers, freights, and passenger and freight cars across waters which divide the road." It is a matter of public notoriety—as much so as the existence of the railroad itself, or that of the Sierra Nevada, or any other geographical feature on the route—that the Railroad Companies in the cases referred to have steam ferryboats engaged in the transportation of passengers and freight across the Bay of San Francisco and the straits of Carquinez; and that without such means of transportation those waters could not be crossed.

The question whether steamers and ferryboats should be included in the property assessed by the State Board of Equalization, or in that assessed by the county board, was distinctly raised in the case of *San Francisco* v. *Central Pacific R. R. Co.* 63 Cal. 469, and decided in favor of the county board. That was an action brought by the City and County of San Francisco against the Company to recover taxes imposed upon it by virtue of an assessment made by the county board upon the same ferryboats now assessed by the state board. The Company resisted the tax on the ground that these boats were assessable by the state board, and not by the county board. The Supreme Court of California decided against the Company. Its finding of facts was as follows, namely: "That the defendant is a corporation existing under the law of the United States, and of this State, * * * owner of a line of railroad known as the Central Pacific Railroad, extending from a point in the City of San Francisco * * * to Ogden in the Territory of Utah; that the length of said road in the City and County of San Francisco is four miles from a point within said city to the eastern [34] shore of the southern arm of the Bay of San Francisco; that from said point on the eastern shore * * * to a point on the western shore of said bay, where the railway of defendant again commences, is about twelve miles; that across said bay no line of railroad has been constructed; and freight and passengers carried upon said road are taken across said bay upon steam ferryboats; * * * that upon the decks of said vessels are laid railroad tracks, etc." After giving judgment for the plaintiff upon these facts, the court says: "The sole question presented for decision herein is whether the steamers Thoroughfare and Transit, mentioned in the above findings, are to be assessed by the assessor of the City and County of San Francisco or by the State Board of Equalization. The property to be assessed by the board is defined in the 10th section of article XIII of the Constitution of 1879. It is the franchise, roadway, roadbed, rails, and rolling stock of all railroads operated in more than one county in the State. All property other than the above mentioned is to be assessed by the local assessors. Are the steamers above named embraced within the category of property named in the section above referred to? The relation of such steamers to the Central Pacific Railroad Company is set forth in the findings." The court then proceeds to show that the ferryboats cannot be included in either of the five categories mentioned in the Constitution, namely, in either the franchise, roadway, roadbed, rails or rolling stock; and concludes as follows: "We are of opinion that the assessment of the steamers above mentioned pertained to the local assessor, and was properly made by the assessor of the City and County of San Francisco." This decision was made in June, 1883, and is a construction of the Constitution of California. It follows that the Act of March 9, 1883, as reproduced in section 3665 of the Political Code, departs from the constitutional provision; and that the assessments, in following the Act, are also unconstitutional and void.

In No. 1157, one of the cases against the Central Pacific Railroad Company, being for the taxes of the year 1884, the court finds that the State Board of Equalization, in making the assessment, did knowingly and designedly in- [35] clude in the valuation of the roadway the value of fences erected upon the line between said roadway and the land of coterminous proprietors. This brings that case precisely within the decision made in the former cases reported in 118th United States Reports [30: 118].

Another defense set up by the Central Pacific

Railroad Company in the three cases against it, namely, Nos. 660, 664 and 1157, and by the Southern Pacific Railroad Company, in No. 661, is that the State Board of Equalization included in their assessments in said cases the value of the franchises conferred upon said companies by the United States, which, it is contended, is repugnant to the Constitution and laws of the United States, and therefore void. Thus, in No. 660, the Central Pacific Railroad Company, in its answer, after reciting the various Acts of Congress conferring franchises and privileges and imposing duties upon the Company, avers that it is a federal corporation, and holds its corporate powers and franchises under the Government of the United States, and that the said government has never given to the State of California the right to lay any tax upon the franchise, existence or operations of the Company. Similar averments are made in the other cases, 664, 1157 and 661. The court finds in each of these cases that the assessment made by the State Board of Equalization included the full value of all franchises and corporate powers held and exercised by the defendant. The first question, then, is whether the defendants in these cases held any franchises granted to them by the Government of the United States. Of this there can hardly be a doubt.

The Central Pacific Railroad Company was constituted by the consolidation of two state corporations of California, but derived many of its franchises and privileges from the Government of the United States. The findings of the court below on this subject are as follows, to wit:

"That on the 28th day of June, 1861, a corporation was formed and organized, under the laws of the State of California, under the corporate name of the Central Pacific Railroad Company of California. Said Corporation was [36] formed for the purpose of constructing, owning and operating a line of railroad and telegraph, commencing at the City of Sacramento in said State and running thence through the Counties of Sacramento, Placer, Sierra and Nevada to the eastern boundary of said State, in the expectation that its proposed railroad would when constructed constitute part of a line of railroad extending from the Missouri River to the Pacific Ocean, which line it was then supposed was about to be constructed under the legislative supervision and authority of the Government of the United States, and which line of railroad was afterwards so constructed.

"That on or about the 1st day of July, 1862, the Government of the United States undertook to construct, or to cause to be constructed, a line of railroad from the Missouri River to the Pacific Ocean, and to that end Congress passed an Act entitled 'An Act to Aid in the Construction of a Railroad from the Missouri River to the Pacific Ocean, and to secure to the Government the Use of the Same for Postal, Military, and Other Purposes." See 12 Stat. at L. p. 489.

"That to facilitate the construction of said road the Government of the United States, by said Act of Congress, conferred upon the said Central Pacific Railroad Company of California the same powers and clothed it with the same privileges and immunities which it conferred upon and clothed the said Union Pacific Railroad Company, except that the said Central Pacific Railroad Company of California was to commence the construction of said railroad at the Pacific Ocean and build east until it met the said Union Pacific railroad, building west.

"That on or about the 2d day of July, 1864, Congress passed an Act entitled 'An Act to Amend an Act Entitled An Act to Aid in the Construction of a Railroad and Telegraph Line from the Missouri River to the Pacific Ocean, and to Secure to the Government of the United States the Use of the Same for Postal, Military and Other Purposes,' approved July 1, 1862. See 13 U. S. Stat. at L. p. 356.

"That said Central Pacific Railroad Company of California filed in the Department of the Interior its acceptance of the terms and [37] conditions of said Act of Congress of July 1, 1862, within the time therein designated.

"That on or about the 31st day of October, 1864, said Central Pacific Railroad Company of California sold and assigned all its rights under the aforesaid Acts to a corporation then existing under the laws of the State of California, and known as the Western Pacific Railroad Company, so far as said rights related to the construction of said railroad and telegraph between the cities of San Josè and Sacramento, in said State of California. Said assignment was ratified and confirmed by the United States by an Act of Congress passed on the 3d day of March, 1865, entitled 'An Act to Amend an Act Entitled An Act to Aid in the Construction of a Railroad and Telegraph Line from the Missouri River to the Pacific Ocean, and to Secure to the Government the Use of the Same for Postal, Military and Other Purposes, Approved July 1, 1862, and to Amend an Act Amendatory Thereof, Approved July 2, 1864.' See 13 U. S. Stat. at L., p. 504.

"That the said line of railroad from the Pacific Ocean to Ogden, in Utah Territory, was completed and put in operation in 1869, and has been in operation from that time until the present, and still is in operation, and the whole of the railroad mentioned in the said Acts of Congress has long since been completed, and is now, in accordance with the spirit and intent of said Acts of Congress, operated as one continuous line from the Missouri River to the Pacific Ocean, and is so operated and maintained for the uses and purposes mentioned in said Acts.

"That in August, 1870, acting under the said Acts of Congress, said Central Pacific Railroad Company of California and the said Western Railroad Company formed themselves into one corporation under the name of the Central Pacific Railroad Company. Said Company is the defendant herein, and has, from the completion of said railroad as aforesaid until the present time, owned (except in the respect hereinafter stated) and operated said railroad under and by virtue of said Acts of Congress and for the uses and purposes therein mentioned."

If we turn to the Acts of Congress referred [38] to by the court, we shall find that franchises of the most important character were conferred on this Company. Originally, the Central Pacific Railroad Company of California had only

power to construct a railroad from Sacramento to the eastern boundary of the State. Congress, by the Act of 1862, authorized the Company (in the words of the Act) "to construct a railroad and telegraph line from the Pacific coast, at or near San Francisco or the navigable waters of the Sacramento River, to the eastern boundary of California, upon the same terms and conditions, in all respects, as are contained in this Act for the construction of said railroad and telegraph line first mentioned [the Union Pacific], and to meet and connect with the first mentioned railroad and telegraph line on the eastern boundary of California." Sec. 9. In the following section it was enacted, that, after the completion of its road to the eastern boundary of California, the Central Pacific might unite upon equal terms with the Union Pacific Railroad Company in constructing so much of said railroad and telegraph line and branch railroads and telegraph lines through the Territories, from the State of California to the Missouri River, as should then remain to be constructed, on the same terms and conditions as provided in relation to the Union Pacific Railroad Company. Thus, without referring to the other franchises and privileges conferred upon this company, the fundamental franchise was given, by the Acts of 1862 and the subsequent Acts, to construct a railroad from the Pacific Ocean across the State of California and the federal Territories until it should meet the Union Pacific; which it did meet at Ogden in the Territory of Utah. This important grant, though in part collateral to, was independent of, that made to the Company by the State of California, and has ever since been possessed and enjoyed. The present Company has it by transfer from, and consolidation of, the original companies, by which its existence and capacities were constituted. Such consolidation was authorized by the 16th section of the Act of Congress of July 1, 1862, and the 16th section of the Act of July 2, 1864, taken [39] in connection with the second section of the Act of March 3, 1865, referred to in the findings of the court. The last named Act ratified the transfer by the Central Pacific to the Western Pacific of a portion of its road extending from San José to Sacramento, and conferred upon the latter company all the privileges and benefits of the several Acts of Congress relating thereto, and subject to all the conditions thereof. If, therefore, the Central Pacific Railroad Company is not a federal corporation, its most important franchises, including that of constructing a railroad from the Pacific Ocean to Ogden city, were conferred upon it by Congress.

It cannot at the present day be doubted that Congress, under the power to regulate commerce among the several States, as well as to provide for postal accommodations and military exigencies, had authority to pass these laws. The power to construct, or to authorize individuals or corporations to construct, national highways and bridges from State to State, is essential to the complete control and regulation of interstate commerce. Without authority in Congress to establish and maintain such highways and bridges, it would be without authority to regulate one of the most important adjuncts of commerce. This power in former times was exerted to a very limited extent, the Cumberland or National road being the most notable instance. Its exertion was but little called for, as commerce was then mostly conducted by water, and many of our statesmen entertained doubts as to the existence of the power to establish ways of communication by land. But since, in consequence of the expansion of the country, the multiplication of its products, and the invention of railroads and locomotion by steam, land transportation has so vastly increased, a sounder consideration of the subject has prevailed and led to the conclusion that Congress has plenary power over the whole subject. Of course the authority of Congress over the Territories of the United States, and its power to grant franchises exercisable therein, are, and ever have been, undoubted. But the wider power was very freely exercised, and much to the general satisfaction, in the creation of the vast system of railroads connecting the East with the Pacific, traversing States as well as Territories, and employing the agency of state as well as federal corporations. See *Pacific R. R. Removal Cases*, 115 U. S. 1, 14-18 [29: 319, 323-325]. [40]

Assuming, then, that the Central Pacific Railroad Company has received the important franchises referred to by grant of the United States, the question arises whether they are legitimate subjects of taxation by the State. They were granted to the Company for national purposes and to subserve national ends. It seems very clear that the State of California can neither take them away, nor destroy nor abridge them, nor cripple them by onerous burdens. Can it tax them? It may undoubtedly tax outside visible property of the Company situated within the State. That is a different thing. But may it tax franchises which are the grant of the United States? In our judgment, it cannot. What is a franchise? Under the English law Blackstone defines it as "a royal privilege, or branch of the king's prerogative, subsisting in the hands of a subject." 2 Com. 37. Generalized, and devested of the special form which it assumes under a monarchical government based on feudal traditions, a franchise is a right, privilege or power, of public concern, which ought not to be exercised by private individuals at their mere will and pleasure, but should be reserved for public control and administration, either by the government directly, or by public agents acting under such conditions and regulations as the government may impose in the public interest and for the public security. Such rights and powers must exist under every form of society. They are always educed by the laws and customs of the community. Under our system, their existence and disposal are under the control of the legislative department of the government, and they cannot be assumed or exercised without legislative authority. No private person can establish a public highway, or a public ferry or railroad, or charge tolls for the use of the same, without authority from the Legislature, direct or derived. These are franchises. No private person can take another's property, even for a public use, without such authority; which is the same as to say that the right of eminent domain can only be exercised by virtue of a legislative grant. This is a fran- [41]

chise. No persons can make themselves a body corporate and politic without legislative authority. Corporate capacity is a franchise. The list might be continued indefinitely.

In view of this description of the nature of a franchise, how can it be possible that a franchise granted by Congress can be subject to taxation by a State without the consent of Congress? Taxation is a burden, and may be laid so heavily as to destroy the thing taxed, or render it valueless. As *Chief Justice* Marshall said in *McCulloch* v. *Maryland*, 17 U. S. 4 Wheat. 316 [4:579], "the power to tax involves the power to destroy." Recollecting the fundamental principle that the Constitution, laws and treaties of the United States are the supreme law of the land, it seems to us almost absurd to contend that a power given to a person or corporation by the United States may be subjected to taxation by a State. The power conferred emanates from, and is a portion of, the power of the government that confers it. To tax it is not only derogatory to the dignity, but subversive of the powers, of the government, and repugnant to its paramount sovereignty. It is unnecessary to cite cases on this subject. The principles laid down by this court in *McCulloch* v. *Maryland, supra; Osborn* v. *Bank of U. S.* 22 U. S. 9 Wheat. 738 [6:204], and *Brown* v. *Maryland*, 25 U. S. 12 Wheat. 419 [6:678], and in numerous cases since which have followed in their lead, abundantly sustain the views we have expressed. It may be added that these views are not in conflict with the decisions of this court in *Thomson* v. *Union Pac. R. R. Co.* 76 U. S. 9 Wall. 579 [19:792], and *Union Pac. R. R. Co.* v. *Peniston*, 85 U. S. 18 Wall. 5 [21:787]. As explained in the opinion of the court in the latter case, the tax there was upon the property of the company, and not upon its franchises or operations. 85 U. S. 18 Wall. 35, 37 [21:793].

The taxation of a corporate franchise merely as such, unless pursuant to a stipulation in the original charter of the company, is the exercise of an authority somewhat arbitrary in its character. It has no limitation but the discretion of the taxing power. The value of a franchise is not measured like that of property, but may be $10,000 or $1,000,000, as the Legislature may choose. Or, without any valuation [42] of the franchise at all, the tax may be arbitrarily laid. It is not an idle objection, therefore, made by the Company against the tax imposed in the present cases.

It only remains to consider whether the Southern Pacific Railroad Company, as well as the Central Pacific, was invested with any franchises derived from the Government of the United States. Of this we think there can be no question. The court below, in its findings of fact in the *Southern Pacific Case* (No. 661), finds that the defendant is a corporation existing under the laws of California, except in so far as its existence, rights, privileges, duties and obligations have been affected by various Acts of Congress. It then describes the course of the defendant's road, which commences on the waters of the Pacific Ocean, in the City of San Francisco, and extends thence southerly to Tres Pinos, in the County of San Benito, from which place to Huron, a distance of forty or fifty miles, a portion of the road is yet unfinished, and the road of the Central Pacific Company is temporarily used in its stead. From Huron the route of the road extends easterly to Goshen, and thence southerly to Mojave. At Mojave it separates into two main branches, one extending in an easterly direction to the Colorado River, near the 25th parallel of north latitude, where it meets and connects with the Atlantic and Pacific Railroad, leading to Springfield, in the State of Missouri; the other branch extends southerly to Los Angeles and thence easterly to Fort Yuma, and connects with the Southern Pacific Railroad of Arizona, and by means of other roads forms a continuous line to New Orleans. The findings then continue to state as follows, namely:

"That on the 27th day of July, 1866, the Government of the United States undertook to construct or cause to be constructed a line of railroad from a point at or near the town of Springfield, in the State of Missouri, to the headwaters of the Colorado Chiquito, and thence along the thirty-fifth parallel of latitude, as near as might be found suitable for a railroad route, to the Colorado River at such point as might be selected, and thence by the most practicable and eligible route to the Pacific Ocean; and to that end Congress passed an Act entitled 'An Act Granting Lands to Aid [43] in the Construction of a Railroad and Telegraph Line from the States of Missouri and Arkansas to the Pacific Ocean,' which Act was approved on said 27th day of July, 1866. See 14 U. S. Stat. at L. p. 292. By said Act certain persons therein named were made and erected into a corporation under the name and style of the 'Atlantic and Pacific Railroad Company.'

"That to faciliate the construction of said road the Government of the United States, by said Act of Congress, adopted the defendant as the instrument or agent of the United States, and conferred upon the defendant (the Southern Pacific Railroad Company), the same powers and clothed defendant with the same privileges and immunities which it conferred upon and clothed the Atlantic and Pacific Railroad Company with, except that the said defendant was to construct only that portion of said railroad between the Colorado River and the City and County of San Francisco.

"That said Atlantic and Pacific Railroad Company organized under said Act * * * and said company and defendant, immediately after the passage of said Act, accepted the terms and conditions thereof, and have duly complied therewith.

"That said Atlantic and Pacific Company has fully completed the whole of said road from Springfield to the Colorado River; and defendant has constructed said road as aforesaid to Mojave, with the exception hereinbefore set out.

"That on the third day of March, 1871, the Government of the United States undertook to construct or cause to be constructed a line of railroad from Marshall, in the State of Texas, to San Diego, in the State of California, and from said line of road at the Colorado River to construct or cause to be constructed a line of railroad which would connect the road from Marshall to San Diego with the line of road provided for in the Act of Congress of July 27, 1866, hereinbefore referred to, and by

means of said connecting road to connect the road from Marshall to San Diego with the City of San Francisco; and to that end Congress passed an Act entitled 'An Act to Incorporate the Texas Pacific Railroad Company and to Aid in the Construction of Its Road and for Other Purposes,' approved March 3, 1870, and [44] subsequently, on the second day of May, 1872, passed an Act entitled 'An Act Supplementary to an Act Entitled An Act to Incorporate the Texas Pacific Railroad Company and to Aid in the Construction of Its Road, and for Other Purposes,' approved March 3, 1871. See 16 U. S. Stat. at L. 573; Vol. 17 *Id.* 59.

"That immediately after the passage of said Act of March, 1871, the Texas Pacific Railroad Company was organized in pursuance thereof, and it and defendant accepted all the terms and conditions of each of said Acts of 1871 and 1872, and have fully and in every respect complied therewith and under them, and in compliance with the spirit and intent of said Acts have completed the roads mentioned in the third finding" [to wit, the line of the defendant's railroads hereinbefore described].

An examination of the Acts referred to in these findings shows that Congress authorized the Southern Pacific Railroad Company to connect with the Atlantic and Pacific Railroad at such point near the boundary line of the State of California as it should deem most suitable for a railroad line to San Francisco; and, to aid in the construction of such a railroad line, Congress declared that the Company should have similar grants of land, and should be required to construct its road on the like regulations, as to time and manner, with the Atlantic and Pacific. Like powers were also given to the Southern Pacific Railroad Company to construct a line of railroad from Tehachapa Pass, by way of Los Angeles, to the Texas Pacific road at the Colorado River (Fort Yuma). The Southern Pacific Railroad Company was not authorized by its original charter to extend its railroad to the Colorado River, as we already know by other cases brought before us, and as appears by the Act of the State Legislature passed April 4, 1870, which assumed to authorize the Company to change the line of its railroad so as to reach the eastern boundary line of the State; thus duplicating the power given to it by the Act of Congress. See the State Act quoted in 118 U. S. 399 [30:118]. This state legislation was probably procured to remove all doubts with regard to the Company's power to construct such roads. It is apparent, however, that the franchise to do so was fully con- [45] ferred by Congress, and that franchise was accepted, and the roads have been constructed in conformity thereto.

It conclusively appears, therefore, that the Southern Pacific Railroad Company did receive from the United States Government, and still enjoys, important franchises connected with its railroads.

It follows that in each one of the cases now before us the assessment made by the State Board of Equalization comprised the value of franchises or property which the board was prohibited by the Constitution of the State from including therein; and that these values are so blended with the other items of which the assessment is composed that they cannot be separated therefrom. The assessments are, therefore, void. This renders it unnecessary to express any opinion on the application of the Fourteenth Amendment, as the result would not be different whatever view we might take on that subject.

The judgments in all the cases are affirmed.

UNITED STATES, *ex rel.* LUTZARDA ANGARICA DE LA RUA, Exrx. of JOAQUIN GARCIA DE ANGARICA, Deceased, *Plff. in Err.*, [251]

v.

THOMAS F. BAYARD, Secretary of State.

(See S. C. "*Angarica* v. *Bayard*," Reporter's ed. 251-261.)

United States not liable for interest—Spanish claim.

1. The United States is not liable to pay interest on claims against it, in the absence of express statutory provision to that effect.

2. Where there has been an unlawful withholding by the Government of the United States—acting through the Secretary of State—of moneys under the agreement of arbitration between the United States and Spain, a claim, for such unlawful withholding, against the Secretary of State is a claim against the Government of the United States; and the Government is not liable for interest on the moneys.

[No. 1241.]

Argued Jan. 5, 1888. Decided April 30, 1888.

IN ERROR to the Supreme Court of the District of Columbia, to review a judgment dismissing a petition for a writ of mandamus to be issued to the Secretary of State of the United States to pay petitioner an amount of interest. *Affirmed.*

Reported below in 4 Mackey, 310; 1 Cent. Rep. 826.

The facts are stated in the opinion.

Messrs. F. R. Coudert and **Edward K. Jones,** for plaintiff in error:

The Secretary of State is the organ of the President for the administration of the affairs of the department over which he presides, and the direction of the President is presumed in all matters issuing therefrom.

Wilcox v. *Jackson*, 38 U. S. 13 Pet. 498 (10: 264); *U. S.* v. *Eliason*, 41 U. S. 16 Pet. 291, 302 (10: 968, 972); 7 Ops. Attys-Gen. (Cush.) 453.

The acts of one head of a department cannot be undone by his successor.

2 Ops. Attys-Gen. 8; 5 Ops. Attys-Gen. 664; 13 Ops. Attys-Gen. 387, 456.

Interest and other fruits of money belong to the person entitled to the main fund.

Broom, Legal Maxims, 7th Am. ed. 496; *Chanel* v. *Robotham*, Yelv. 68 b; Coke, Litt. 152a, 389a; Finch, Law, 23; Shep. Touch. 89; *Clark* v. *Alexander*, 8 Scott, N. R. 165; *Hollis* v. *Palmer*, 2 Bing. N. C. 713; *Florence* v. *Drayson*, 1 C. B. N. S. 584; *Bective* v. *Hodgson*, 10 H. L. Cas. 665; *Sullivan* v. *Winthrop*, 1 Sumn. 1; *Barney* v. *Saunders*, 57 U. S. 16 How. 543 (14: 1051).

Relator is entitled to the writ of mandamus.

Comegys v. *Vasse*, 26 U. S. 1 Pet. 193, 216 (7: 108, 118); *Judson* v. *Corcoran*, 58 U. S. 17 How.

612 (15:231); *Lewis* v. *Bell*, Id. 616 (15:203); *U. S.* v. *Schurz*, 102 U. S. 378 (26:167); *Kendall* v. *U. S.* 37 U. S. 12 Pet. 526 (9:1182); *Marbury* v. *Madison*, 5 U. S. 1 Cranch, 137 (2:60); *McClung* v. *Silliman*, 19 U. S. 6 Wheat. 598 (5:340); *U. S.* v. *Arredondo*, 31 U. S. 6 Pet. 729 (8:561); *Gaines* v. *Thompson*, 74 U. S. 7 Wall. 349 (19:64).

Mr. **Wm. A. Maury,** *Asst. Atty-Gen.*, for defendant in error:

There is no duty here which is enforceable by suit.

Great Western Ins. Co. v. *U. S.* 19 Ct. Cl. 217; *S. C.* 112 U. S. 193 (28:687); *Rustomjee* v. *The Queen*, L. R. 1 Q. B. Div. 487; *S. C.* L. R. 2 Q. B. Div. 69; *Burnand* v. *Rodocanachi*, L. R. 5 C. P. Div. 424; *S. C.* L. R. 6 Q. B. Div. 633; and L. R. 7 App. Cas. 333.

[252] *Mr. Justice* **Blatchford** delivered the opinion of the court:

In this case, Lutzarda Angarica de la Rua, executrix of the estate of Joaquin Garcia de Angarica, deceased, presented a petition to the Supreme Court of the District of Columbia, praying for a writ of mandamus to be issued to Thomas F. Bayard, Secretary of State of the United States, to pay the petitioner the amount of the interest or income derived from a certain investment of money. The case was heard in the first instance by the general term of that court, which rendered a judgment, on the 7th of December, 1885, dismissing the petition, with costs, on the ground that mandamus was not the remedy applicable to the case stated in the petition. 4 Mackey, 310. The petitioner has brought a writ of error in the name of the United States, on her relation, to reverse that judgment.

The following are the material facts of the case: On the 12th of February, 1871, an agreement was concluded between the United States and Spain, for the settlement of certain claims of citizens of the United States (17 Stat. at L. 839), of which a copy is set forth in the margin.*

Pursuant to the agreement, the arbitrators [253] and the umpire were appointed, and a commission thus composed, generally known as the [254] "Spanish-American Claims Commission," was established. Angarica filed a claim before the commission, and it decided that he had a right to recover damages to the amount of $748,180, with interest at 6 per cent per annum thereon from November 1, 1875, to the day of payment. The full amount of the award was paid to the Secretary of State of the United States in two installments, namely March 27, 1877, $406,894.96, and October 8, 1877, $415,699.75, making a total of $822,594.71. The whole amount was paid over by the Secretary, except $41,129.74, being 5 per cent of the amount received, which sum the Secretary retained until the Government of Spain should make provision for paying the expenses of the commission. Of the $41,129.74 so retained, so much as could be utilized for the purpose was invested in securities of the United States, and thereafter the surplus, with the interest which accrued on the first investment, was similarly invested, and so were subsequent accumulations of interest.

In a circular letter addressed by the then Secretary of State to Angarica, when the 5 per cent was withheld, it was said: "Five per centum of the amount due in each case will be reserved for the present, to meet the expenses of the commission, until a payment to cover such expenses shall have been made by Spain in conformity with the provision in that regard of said agreement of February 12, 1871, between the United States and Spain."

In a report made by Mr. Evarts, Secretary of State, to the President, dated February 16, 1880, and transmitted by him to the Senate, the Secretary stated that "this retention of 5 per [255] centum may be regarded as provisional only, the commission not having yet taken the final step of adding a percentage to the amount of its awards in order to meet the expenses of the commission." The then Secretary of State also notified Angarica that "it is hoped that no great delay will occur in receiving the payment from

* "Memorandum of an arbitration for the settlement of the claims of citizens of the United States, or of their heirs, against the Government of Spain for wrongs and injuries committed against their persons and property, or against the persons and property of citizens of whom the said heirs are the legal representatives, by the authorities of Spain, in the Island of Cuba, or within the maritime jurisdiction thereof, since the commencement of the present insurrection.

"1. It is agreed that all such claims shall be submitted to arbitrators, one to be appointed by the Secretary of State of the United States, another by the Envoy Extraordinary and Minister Plenipotentiary of Spain at Washington, and these two to name an umpire who shall decide all questions upon which they shall be unable to agree; and in case the place of either arbitrator or of the umpire shall from any cause become vacant, such vacancy shall be filled forthwith in the manner herein provided for the original appointment.

"2. The arbitrators and umpire so named shall meet at Washington within one month from the date of their appointment, and shall, before proceeding to business, make and subscribe a solemn declaration that they will impartially hear and determine, to the best of their judgment, and according to public law and the treaties in force between the two countries and these present stipulations, all such claims as shall, in conformity with this agreement, be laid before them on the part of the Government of the United States; and such declaration shall be entered upon the record of their proceedings.

"3. Each government may name an advocate to appear before the arbitrators or the umpire, to represent the interests of the parties respectively.

"4. The arbitrators shall have full power, subject to these stipulations, and it shall be their duty, before proceeding with the hearing and decision of any case, to make and publish convenient rules prescribing the time and manner of the presentation of claims and of the proof thereof; and any disagreement with reference to the said rules of proceeding shall be decided by the umpire. It is understood that a reasonable period shall be allowed for the presentation of the proofs; that all claims, and the testimony in favor of them, shall be presented only through the Government of the United States; that the award made in each case shall be in writing, and, if indemnity be given, the sum to be paid shall be expressed in the gold coin of the United States.

"5. The arbitrators shall have jurisdiction of all claims presented to them by the Government of the United States for injuries done to citizens of the United States by the authorities of Spain, in Cuba, since the first day of October, 1868. Adjudications of the tribunals in Cuba concerning citizens of the United States, made in the absence of the parties interested, or in violation of international law or of the guarantees and forms provided for in the Treaty of October 27, 1795, between the United States and Spain, may be reviewed by the arbitrators, who shall make such award in any such case as they shall deem just. No judgment of a Spanish tribunal, disallowing the affirmation of a party that he is a citizen of the United States, shall pre-

Spain, which will liberate this reserve for expenses, and the department will expect to keep this reserve invested in interest-bearing securities of the United States, to cover the delay in its distribution to the claimants." On the 12th of February, 1885, Mr. Frelinghuysen, then Secretary of State, paid to the petitioner the $41,129.74, but did not pay any interest or income which had been earned by its investment. Correspondence thereupon ensued between the attorneys for the petitioner and Mr. Frelinghuysen, in regard to the payment of such interest, in which such attorneys referred to a letter written to them on the 13th of September, 1880, by Mr. Evarts, then Secretary of State, in which they alleged that he had officially promised to pay the interest earned on the money; but no copy of such letter is found in the record. Mr. Frelinghuysen declined to pay any interest. The attorneys renewed the correspondence with Mr. Bayard, in October, 1885, but he refused to pay the interest, on the ground that the matter had been decided by his predecessor, and that his decision was in accordance with the almost unbroken rulings of the executive and judicial departments of the Government, citing the opinion of Attorney-General Cushing (7 Ops. Attys-Gen. 523), and the case of *Gordon* v. *United States*, 74 U. S. 7 Wall. 188 [19:35]. Further correspondence ensued, and, in one letter Mr. Bayard stated that the investment of the retained moneys was in pursuance of the general system founded on section 2 of the Act of September 11, 1841, chap. 25, 5 Stat. at L. 465, now section 3659 of the Revised Statutes, by which it is prescribed that "all funds held in trust by the United States, and the annual interest accruing thereon, when not otherwise required by treaty, shall be invested in stocks of the United States, bearing a rate of interest not less than 5 per centum per annum;" [256] that, the enactment being silent as to the beneficiary by such a transaction, "the sole competence of Congress, which prescribed the mode of investment, to direct the disposition of the proceeds, is beyond dispute;" that Congress exercised its discretion in regard to the payment of interest in the case of the Japanese indemnity fund and in the case of the Alabama claims fund; that it is *res judicata* that the Secretary of State has no discretionary power to dispose of the accumulations resulting from investments made in pursuance of the Act of September 11, 1841; and that, therefore, he cannot be bound by what he deems to have been the improvident intimation contained in Mr. Evarts' letter of September 13, 1880. In reply to a further letter from the attorneys, Mr. Bayard, while furnishing them with a statement of the amount of the original award and its date, and of the amount received from Spain and the date of its receipt, and of the amount paid to the estate of Angarica, less the 5 per cent previously retained, and of the date of such payment, and of the amount of the 5 per cent retained, declined to state whether such 5 per cent was invested in government or other securities, and, if so, the date of the investment, and what part of it was so invested, and from what date it earned interest, or any other particulars in regard to any investment, except to state "that, of the 5 per cent retained by the Department of State, so much as could be utilized for the purpose was invested in securities of the United States, and that thereafter the surplus, with the interest which accrued on the first investment, was similarly invested, and so were subsequent accumulations of interest;" and that, to give the further detailed information asked for would be in effect conceding to private parties an accountability which he owed to Congress alone.

The petition, after setting forth the foregoing facts, alleges that, as matter of law, the said interest or income is an incident to the principal fund and follows the same; that the fund due and payable to the petitioner is a liquidated and fixed sum of money, involving no accounting, and which it is the ministerial duty of the Secretary to pay to the petitioner; and that such payment does not involve the exercise of any discretion, nor concern any international [257] matter connected with the foreign relations of the United States. It also alleges that the sum of $41,129.74, retained by the Secretary from the award in favor of Angarica, formed part of a general fund, composed of various sums similarly retained by the Secretary from awards made in favor of other claimants, and received in installments at different times, the total of such reserves amounting to $77,887.04; that these amounts were from time to time invested in such sums and in such manner as was practicable, without reference to the separate and individual interests involved; that the income on these investments resulted in part from the sale of gold coin, in part from premiums on United States bonds sold and exchanged without reference to the shares of the several claimants, and in part from interest on such bonds, and

---

vent the arbitrators from hearing a reclamation presented in behalf of said party by the United States Government; nevertheless, in any case heard by the arbitrators, the Spanish Government may traverse the allegation of American citizenship, and thereupon competent and sufficient proof thereof will be required. The commission having recognized the quality of American citizens in the claimants, they will acquire the rights accorded to them by the present stipulations as such citizens. And it is further agreed that the arbitrators shall not have jurisdiction of any reclamation made in behalf of a native-born Spanish subject, naturalized in the United States, if it shall appear that the same subject matter having been adjudicated by a competent tribunal in Cuba, and the claimant, having appeared therein, either in person or by his duly appointed attorney, and being required by the laws of Spain to make a declaration of his nationality, failed to declare that he was a citizen of the United States; in such case, and for the purposes of this arbitration, it shall be deemed and taken that the claimant, by his own default, had renounced his allegiance to the United States. And it is further agreed that the arbitrators shall not have jurisdiction of any demands growing out of contracts.

"6. The expenses of the arbitration will be defrayed by a percentage to be added to the amount awarded. The compensation of the arbitrators and umpire shall not exceed three thousand dollars each; the same allowance shall be made to each of the two advocates representing respectively the two governments; and the arbitrators may employ a secretary at a compensation not exceeding the sum of five dollars a day for every day actually and necessarily given to the business of the arbitration.

"7. The two governments will accept the awards made in the several cases submitted to the said arbitration as final and conclusive, and will give full effect to the same in good faith and as soon as possible."

amounted in all to $14,485.50; that such increment is not traceable, in separate or respective amounts, to any particular percentages of individual claimants; and that no apportionment of such increment has been made by the Secretary among the respective claimants. The prayer of the petition is for a writ of mandamus commanding the Secretary to apportion and pay to the petitioner her proportion of the increment attributable to the sum of $41,129.74, so reserved from the award made in favor of her testator.

The Secretary answered the petition as follows: "This respondent, admitting the matters and things set forth and averred in the said petition, except as hereinafter excepted, answering, saith that it is not true, as stated in the third paragraph of the said petition, that the Spanish-American Claims Commission 'duly awarded a judgment in favor of said Joaquin Garcia de Angarica and against the said Kingdom of Spain for the sum of $748,180, with interest at the rate of 6 per centum per annum from the 1st day of November, 1875, until paid;' but this respondent saith that an award or judgment for a like sum of money and for like interest was made and rendered by the said commission in favor of the United States of America, and that the said Joaquin Garcia de Angarica was no party to any proceedings at any time pending before the said Spanish-American Claims Commission; and, as a consequence, this respondent doth also deny that the said sum of money, with the interest thereon, was paid unto the Secretary of State of the United States to the use of, or to be paid to, the said Joaquin Garcia de Angarica, as is averred in the fourth paragraph of the said petition, or that, upon the said payment, it became the duty of the Secretary of State to pay the same to the said petitioner's testator in satisfaction of any judgment or award; for this respondent doth aver, that, when the said money was received by the then Secretary of State, it came to his hands coupled with duties to the United States and possible duties to the Kingdom of Spain, which duties were in the one case, and would have been in the other case, paramount and superior to any duty in the premises to the said petitioner or her testator. And this respondent, further answering, saith that the said petition proceeds upon a ground which wholly ignores certain grave international elements and considerations that entered into the claim of the petitioner's testator so soon as the Government of the United States began and assumed to urge and prosecute the same, and that thenceforth the said claim became, in contemplation of law, subject to the will of the Government of the United States and entirely beyond the control of the said petitioner's testator. And this respondent, further answering, saith that the interest money demanded in the said petition, as the accretion of a part of the said sum of money adjudged and awarded as aforesaid, is the fruit of an investment of the said principal money by the Secretary of State, made in obedience to law and in the performance of a general statutory duty, and not for the use and behoof of the said petitioner's testator. And this respondent, protesting that no agreement to pay the said petitioner or her testator the said interest money was made by the Secretary of State, as is averred in the said petition, doth deny that the Secretary of State could have made a valid agreement in that behalf. And this respondent, further answering, saith, that to place him under the stress of the writ of mandamus, as touching the said interest money, would be subversive of the established principle that the Government of the United States does not pay interest to its citizens, as damages for the detention of money. And this respondent, further answering, saith, with all deference and respect, that, as the representative of the President of the United States in carrying out a treaty, he cannot hold the relation of trustee toward any citizen, saving in the larger sense that every public functionary is clothed with a trust, and that he cannot be controlled or directed in the performance of any such duty at the suit of any citizen."

[258] [259]

We are of opinion that the judgment of the court below must be affirmed. Under the agreement for arbitration, the claim of Angarica was to be laid before the arbitrators and umpire "on the part of the Government of the United States." The claim and the testimony in its favor were to be presented "only through the Government of the United States." In another place the claim is spoken of as one presented to the arbitrators "by the Government of the United States." In the sixth clause, the two advocates are spoken of as "representing respectively the two Governments," and in the seventh clause it is said that "the two Governments will accept the awards." Thus, by the plain terms of the agreement, the amount of the award in the case of Angarica was to be paid by the Spanish Government to the Government of the United States. It was paid by the Spanish Government to the Secretary of State of the United States, representing the Government of the United States.

If there was any unlawful withholding from the petitioner of the $41,129.74, the money was withheld by the Government of the United States, acting through the Secretary of State, and any claim of the petitioner, based upon an unlawful withholding, was a claim against the Government of the United States. That claim, in the present controversy, assumes the shape of a claim for the increment or income alleged to have been actually received by the United States from the investment of the money for the time it was withheld; but the claim in that respect is not different in character from what it would have been if, instead of being a claim for increment or income actually received by the United States, it were a claim for interest generally, or for increment or income which the United States would or might have received by the exercise of proper care in the investment of the money.

[260]

The case, therefore, falls within the well settled principle that the United States are not liable to pay interest on claims against them, in the absence of express statutory provision to that effect. It has been established as a general rule, in the practice of the Government, that interest is not allowed on claims against it, whether such claims originate in contract or in tort, and whether they arise in the ordinary business of administration or under private Acts of relief, passed by Congress on special application. The only recognized exceptions

are where the Government stipulates to pay interest and where interest is given expressly by an Act of Congress, either by the name of interest or by that of damages.

This appears from a succession of the opinions of the Attorneys-General of the United States, given by Attorneys-General Wirt, Crittenden, Legaré, Nelson, Johnson, Cushing and Black, and appearing in the following volumes and pages of those opinions, as published: 1, 268; 1, 550; 1, 554; 3, 635; 4, 14; 4, 136; 4, 286; 5, 105; 7, 523; 9, 57; and 9, 449.

Not only is this the general principle and settled rule of the executive department of the Government, but it has been the rule of the legislative department, because Congress, though well knowing the rule observed at the treasury, and frequently invited to change it, has refused to pass any general law for the allowance and payment of interest on claims against the Government. Such statutes for the payment of interest as have been passed apply to specific cases enumerated in the several statutes, and do not cover the present case.

The principle above stated is recognized by this court. In *Tillson* v. *United States*, 100 U. S. 43, 47 [25:543, 544], this court, speaking of the rule that interest is recoverable between citizens if a payment of money is unreasonably delayed, says that with the Government the rule is different, and that the practice has long prevailed in the departments of not allowing interest on claims presented, except it is in some way specially provided for. See also *Gordon* v. *U. S.* 74 U. S. 7 Wall. 188 [19:35], and *Harvey* v. *U. S.* 113 U. S. 243, 248, 249 [28: 987-989].

[261] No claim for the allowance of interest can be predicated in this case upon the language of any notification or circular or letter which issued from the Department of State. No binding contract for the payment of interest was thereby created, and the present Secretary was at liberty to act on his own judgment in the premises, irrespective of anything contained in any such notification, circular, or letter.

Upon these considerations, the judgment of the court below in general term is affirmed.

---

[494] FREEDMAN'S SAVINGS AND TRUST COMPANY, HENRY W. CANNON, Commissioner, Etc., *Appts.*,

v.

ALEXANDER R. SHEPHERD ET AL.

ALEXANDER R. SHEPHERD, *Appt.*

v.

JOHN W. THOMPSON.

(See S. C. Reporter's ed. 494-507.)

Rents and profits of mortgaged property—to whom they belong—assignment of rents—lease to United States—assignment to pay creditors.

1. A mortgagor and mortgagee may provide in the mortgage for the payment of the rents and profits of the mortgaged property to the latter, even while the former remains in possession.

2. But when the mortgage contains no such provision, and even where the income is expressly pledged as security for the mortgage debt, with the right in the mortgagee to take possession upon failure of the mortgagor to perform the conditions of the mortgage, the mortgagee is not entitled to the rents and profits of the mortgaged premises until he takes actual possession, or until possession is taken in his behalf by a receiver, or until he demands and is refused possession.

3. When the mortgage only gives the mortgagee authority upon default to sell the property, and, in that way, oust the mortgagor, and does not pledge the rents, the mortgagor may pledge or assign the rents until a sale is had under the mortgage.

4. Where property is leased to the United States, an assignment of the lease is not void under section 3737, Revised Statutes.

5. Section 3477, Revised Statutes, does not prevent the lessor from devoting the rent, under such lease, to the payment of his debts, by assignment, where the government chooses to recognize the assignment.

[Nos. 230, 256.]

Argued April 17, 18, 1888. Decided April 30, 1888.

APPEALS from a decree of the Supreme Court of the District of Columbia, awarding the proceeds of drafts issued by the United States Treasury in payment of rent to appellee Thompson, and certain money to the trustees of Shepherd. *Affirmed.*

The facts are stated in the opinion.

Messrs. A. C. Bradley and **W. F. Mattingly**, for Shepherd:

The object of the original bill was to restrain a sale only until the decision by the supreme court. When the order was passed dissolving the restraining order, it disposed of the original bill and carried with it the cross bill.

Ross v. *Clore*, 3 Dana, 189, 197; *Cross* v. *DeValle*, 68 U. S. 1 Wall. 14 (17:518).

The cross bill should have been stricken from the files.

Washington, A. & G. R. R. Co. v. *Washington*, 77 U. S. 10 Wall. 299 (19:894); *Miles* v. *Bacon*, 4 J. J. Marsh. 457; *Anderson* v. *Ward*, 6 T. B. Mon. 419.

The demurrer was properly sustained.

Nashville & C. R. Co. v. *U. S.* 101 U. S. 641 (25:1074); *Providence Rubber Co.* v. *Goodyear*, 76 U. S. 9 Wall. 809 (19:589); Story, Eq. Pl. § 398, b. 399, 629.

New parties by cross bill cannot be made.

Shields v. *Barrow*, 58 U. S. 17 How. 142 (15: 161); *Cross* v. *DeValle*, 68 U. S. 1 Wall. 5 (17: 515); *Griffith* v. *Merritt*, 19 N. Y. 529; *Andrews* v. *Kibbee*, 12 Mich. 94; *Slason* v. *Wright*, 14 Vt. 208; *Rutland* v. *Paige*, 24 Vt. 181.

Unlike an ordinary mortgagee, the party secured by deed of trust has no interest in the land.

Neilson v. *Lagow*, 53 U. S. 12 How. 98 (13: 909).

The rents were not granted; the grantor is entitled to them until sale made.

Chadbourn v. *Henderson*, 2 Baxt. 463; *Morford* v. *Hamner*, 3 Baxt. 391; *Wagar* v. *Stone*, 36 Mich. 364; *Guy* v. *Ide*, 6 Cal. 99; *Gilman* v. *Illinois & M. Tel. Co.* 91 U. S. 61 (23:410); *Florida Cent. R. R. Co.* v. *Schutte*, 103 U. S. 143 (26:336); *Teal* v. *Walker*, 111 U. S. 242 (28: 415).

The Thompson bill is inconsistent. Such a bill cannot be sustained.

Shields v. *Barrow*, *supra*; *Lloyd* v. *Brewster*, 4 Paige, 537; *Lanahan* v. *Latrobe*, 7 Md. 268; *Williams* v. *Jackson*, 107 U. S. 484 (27:531).

Mr. **Enoch Totten,** for Trust Company:

The attempted transfer to Shepherd of the lease, made by Bradley to the United States, is void.

Section 3737, Rev. Stat.; *Wheeler* v. *U. S.* 5 Ct. Cl. 504; *McCord* v. *U. S.* 9 Ct. Cl. 156; *Francis* v. *U. S.* 11 Ct. Cl. 688.

The assignment, dated June 21, 1877, is an attempted assignment of a claim against the United States, and is therefore void.

Section 3477, Rev. Stat.; *U. S.* v. *Gillis*, 95 U. S. 407 (24:503); *Erwin* v. *U. S.* 97 U. S. 392 (24:1065); *Spofford* v. *Kirk*, Id. 484 (24:1032).

Where the rents belong to the mortgagee, as against the mortgagor in possession, the fact that a receiver was not appointed is immaterial.

Dow v. *Memphis & L. R. R. R. Co.* 124 U. S. 653 (*ante*, 565); *Teal* v. *Walker*, 111 U. S. 251 (28:418) *Fosdick* v. *Schall*, 99 U. S. 251 (25: 342).

The courts of equity in foreclosure suits, when the security is insufficient, will seize the rents due and uncollected as well as those to become due.

Lofsky v. *Maujer*, 3 Sandf. Ch. 69; *Howell* v. *Ripley*, 10 Paige, 47; *Argall* v. *Pitts*, 78 N. Y. 242; *Wyckoff* v. *Scofield*, 98 N. Y. 475.

A new party may be brought in by a cross bill.

Brandon Mfg. Co. v. *Prime*, 14 Blatchf. 371.

Shepherd was clearly in contempt in collecting the rents in violation of the order of March 18, 1878. Wilson was too.

Hull v. *Thomas*, 3 Edw. Ch. 238; *Skip* v. *Harwood*, 3 Atk. 564; *Wellesley* v. *Mornington*, 11 Beav. 181; High, Inj. § 1435.

Messrs. **H. H. Wells** and **M. F. Morris,** for Thompson:

A mortgagor's real estate is not liable for rent while in his possession. Until the mortgagee takes possession, the mortgagor is entitled to all the profits.

American Bridge Co. v. *Heidelbach*, 94 U. S. 798 (24:144); *Galveston, H. & H. R. R. Co.* v. *Cowdrey*, 78 U. S. 11 Wall. 459 (20:199); *Gilman* v. *Illinois & M. Tel. Co.* 91 U. S. 603 (23:405); *Chinnery* v. *Blackman*, 3 Doug. 391; *Kountze* v. *Omaha Hotel Co.* 107 U. S. 378 (27:609); *Teal* v. *Walker*, 111 U. S. 242 (28:415).

The assignment to Thompson of the claim against the United States was not void.

U. S. v. *Gillis*, 95 U. S. 407 (24:503); *Erwin* v. *U. S.* 97 U. S. 392 (24:1065); *Spofford* v. *Kirk*, Id. 484 (24:1032); *Goodman* v. *Niblack*, 102 U. S. 556 (26: 229); *Hobbs* v. *McLean*, 117 U. S. 567 (29:940); *Bailey* v. *U. S.* 109 U. S. 432 (27: 988).

Mr. Justice **Harlan** delivered the opinion of the court:

These consolidated causes involved the conflicting claims of the parties: *first*, to the proceeds of two drafts, one for $1,800, and the other for $3,475, issued by the United States Treasury in payment of the rent of lot four, square three hundred and seventy-seven, with the improvements thereon, in the City of Washington, and made payable to the order of A. C. Bradley, to the use of Alexander R. Shepherd, to the use of George Taylor, Peter F. Bacon, and Samuel Cross, trustees; *second*, to a balance of $787.50 in the hands of A. C. Bradley, who was appointed, in the first of the above-named causes, receiver of said premises with authority to collect the rents due and to become due for use and occupation of the same by the United States.

495]

The final decree awarded the proceeds of the two drafts to Thompson, appellee in each of the causes, and the money in the hands of the receiver to the trustees of Shepherd. Of that decree both the Freedman's Savings and Trust Company and Shepherd complain.

This controversy has been greatly tangled by an unusual number of pleadings, affidavits, motions, rules and orders. But the facts, so far as it is necessary to state them, are as follows:

The Freedman's Savings and Trust Company (to be hereafter called the Trust Company) sold and conveyed this property to A. C. Bradley; and for the unpaid purchase money the latter executed his five several notes for $2,400, $2,-650, $2,900, $3,150, and $5,900, payable in one, two, three, four and five years from June 9, 1873, with interest at 8 per centum per annum, payable semi-annually.

For the purpose of securing the payment of those notes Bradley, by deed of trust, in the nature of a mortgage, duly recorded on the 18th of June, 1873, conveyed the property to John W. Alvord and George W. Stickney, together with "all the improvements, ways, easements, rights, privileges, appurtenances and hereditaments" appertaining to the same, and "all the estate, right, title, interest and claim whatsoever, either at law or in equity," of the grantor in the premises, in trust to permit Bradley, his heirs or assigns, to use and occupy the premises, and take the rents, issues and profits thereof to their sole use and benefit, "until default be made in the payment of said notes or any of them, or any installment of interest due thereon, or any proper cost, charges, commission, half commission or expense in and about the same;" and upon the further trust, such default having occurred, to sell the property at public auction, after at least twenty days' notice of the time, place, and terms of sale, and convey the same in fee simple to the purchaser. [496]

Prior to the execution of this deed, Bradley, by a formal instrument in writing, to which the Postmaster-General was a party, had leased the premises to the United States, at an annual rent of $4,200, for the term of three years from June 5, 1873, with the privilege to the government of extending the term for two additional years. On the 27th of August, 1874, he conveyed to Alexander R. Shepherd; and, on the 21st of November of the same year, gave written notice to the Postmaster-General of Shepherd's purchase. He also assigned and transferred the lease to the latter, with authority to collect the rent.

It should be stated in this connection that in his purchase Bradley really represented Shepherd, the latter verbally assuming to pay the notes given to the Trust Company.

On the 15th of November, 1876, Shepherd made a conveyance to George Taylor, Henry A. Willard (who was succeeded by Peter F. Bacon), and Samuel Cross, of a large amount of property, *including the premises in controversy*, in trust to secure his three notes of $100,000

each. That conveyance contained a covenant upon the part of Shepherd that all the rents, profits, issues, and proceeds of the trust property coming to his hands should be applied by him solely to the benefit and advantage of the creditors whose debts were secured by the deed.

The rent reserved for the year ending June 30, 1876, not having been paid, Shepherd caused suit to be brought in the court of claims, in the name of Bradley, against the United States, to the use of Taylor, Bacon and Cross, trustees. In that suit judgment was rendered against the government for only $1,800, and was affirmed by this court at its October Term, 1878. *Bradley* v. *U.S.* 98 U. S. 104 [25:105]. Pending the appeal in that case a second suit was brought for the rent reserved for the years ending June 30, 1877, and June 30, 1878. But the decision in the first suit rendered the further prosecution of the second suit unnecessary.

[497] In consideration of the indebtedness described in a deed executed by Shepherd, March 10, 1873, to William Thompson, as trustee, Bradley and Shepherd, by writing, dated June 21, 1877, pledged the demand against the United States for use and occupation of these premises, as security for the payment of said indebtedness with interest thereon at the rate of 8 per cent per annum until paid; and, in the same instrument, "covenanted and agreed that any draft or check issued in payment or part payment of said claim shall be indorsed and delivered to the trustee named in said trust, and the proceeds thereof, less all proper costs and charges, be applied to the payment of the said indebtedness, with interest as aforesaid, or to so much thereof as the sum or sums of money so received is or are sufficient to pay." To this pledge and agreement the trustees named in Shepherd's deed of the 15th of November, 1876, gave their written assent.

The premises having been advertised to be sold on the 3d of August, 1877, under the deed of trust of June 18, 1873, because of default in the payment of interest and principal, Shepherd and the trustees in the deed of November 15, 1876, instituted August 2, 1877, a suit in equity, being the first named of the above causes, to enjoin the sale. The ground alleged for the injunction was the pendency of a suit brought by Mrs. McGhan and Edward Clark, her trustee, *Clark* v. *Freedman's Sav. & Trust Co.* 100 U.S. 149 [25:573], which involved the title of the Trust Company to the property conveyed to Bradley, and by the latter to Shepherd. A temporary injunction of the character asked was granted. The Trust Company answered the original bill. It also filed, October 25, 1887, its cross bill against the plaintiffs, in which, after alleging the insolvency of Shepherd and Bradley, its fear that the property would not sell for enough to pay the debts secured by the mortgage, and the taxes on it, and asserting the right of its creditors to have the rents thereof applied to its claims, in preference to the debts held by other creditors of Shepherd, it prayed that Shepherd, Taylor, Cross, and Bacon be perpetually restrained from applying for or receiving any rents or sums of money due from the United States on account of the use and occupation of the premises, until the final determination of this cause and of the equity suit brought by Mrs. McGhan and Clark; and that a receiver be appointed to collect the rents due from the United States on account of the use and occupation of the premises.

[498]

On the 18th of March, 1878, the case was heard on the motion of the Trust Company for a receiver and an injunction, and an order was made enjoining the complainants "from collecting or receiving any moneys or other thing of value from the United States on account of the lease made between the United States and A. C. Bradley, and bearing date June 6, 1873, for the premises involved in this cause."

On the 12th of March, 1879, the Trust Company, by petition, asked the appointment of a receiver to take charge of the property and to collect the rents during and after its occupancy by the government, and that Shepherd and his co-complainants be enjoined from receiving from the United States any of said rents.

On the 10th of May, 1879, the cause was heard upon the matters embraced in that petition, and on motion of the Trust Company, and with the consent of the other parties, Bradley was appointed receiver in the cause. He was directed to take charge of the property, and collect the rents therefor, "excepting, however, the rents accrued and to accrue from the 6th day of June, 1878, to the 1st day of July, 1879, which have been or are to be collected and received by the said Alexander R. Shepherd or his assigns." It was further ordered that the parties be enjoined from applying for or receiving any moneys due or to become due on account of the use and occupation of the premises, save and except the rents for the period just named.

Subsequently, upon the petition of Bradley, as receiver, Nathaniel Wilson was made a party to the cause—he having, in his capacity as an attorney, received the proceeds of the draft for $1,800 issued by the United States in discharge of the judgment for the rent of the premises for the year ending June 30, 1876, and a draft for the rent accruing after that date and up to June 6, 1878. Wilson appeared and answered, stating that he held the proceeds of the draft [499] for $1,800, less certain sums deducted therefrom, and also the draft for $3,475, subject to the order of the court.

John W. Thompson filed a petition praying leave to intervene for the protection of his interests. This petition was afterwards withdrawn, and he instituted an original suit—the second of the above named causes—against Bradley, Shepherd, the Trust Company, the trustees in Shepherd's deed of November 15, 1876, William Thompson, the trustee in the deed of March 10, 1873, and Nathaniel Wilson. From the pleadings and evidence in that suit it appears that Thompson holds Shepherd's two notes of $7,000 and $8,000, on which, at the time he sued, there was due a balance of $11,677.28, with interest at the rate of 8 per cent per annum on $8,000 thereof from March 10, 1875, and on $3,677.28 from June 22, 1875. These notes constituted the indebtedness referred to in the deed of trust to William Thompson, to secure the payment of which, Bradley and Shepherd, with the consent of the latter's trustees, executed the writing of June 21, 1877. Thompson's suit was consolidated with the one brought by Shepherd.

On the 18th of January, 1880, the restraining order made August 2, 1877, in Shepherd's suit, was set aside; and, on the 28th of February, 1880, the property having in the mean time been sold under Bradley's deed and purchased by the Commissioners of the Trust Company—leaving due on Bradley's notes more than $11,000—the receiver was directed to deliver possession to the commissioners, who were authorized to apply for, collect, and receive the rents, issues and profits of the property thereafter falling due.

The amount of rent collected by the receiver, less his commission, was $787.50. The amount in the hands of Wilson, including the draft for $3,475, was $4,675.

The final decree was of the character indicated in the beginning of the opinion. In respect to the draft for $3,475, the decree required Bradley, Shepherd, Taylor, Bacon and Cross to indorse the same, and directed its collection by Wilson, and the payment by him to Thompson of the proceeds, together with the balance [500] in his hands of the $1,800 draft. It was further ordered that the $787.50 in the hands of the receiver be paid to the trustees of Shepherd.

What rights did the Trust Company acquire, under Bradley's deed, in respect to the income or rents of the mortgaged property, accruing after the execution of that instrument? This is the principal question presented for our consideration, and will be first examined.

In *Gilman* v. *Illinois & M. Tel. Co.* 91 U. S. 603, 616 [23: 405, 410], the question was as to the disposition of certain earnings of a railroad, accruing after a decree of foreclosure and sale, and before the purchaser at the sale was let into possession. The first, in point of time, of the mortgages conveying the property to secure the company's bonds, provided, among other things, that it might remain in possession and operate the road, enjoying the revenues thereof, until default occurred in paying the interest or the principal of its bonds at maturity; and if such default continued six months, or if the company failed to set apart, deposit, and apply certain moneys as acquired by the mortgage, then the trustees might, and it should be their duty to enter upon and take possession of and, by agents, operate the mortgaged property. The second mortgage contained substantially the same provisions. After the decree of foreclosure and sale was passed, a judgment creditor of the company, proceeding under the local law, garnished, in the hands of the company's agents at its various stations, moneys received by them from the operation of the road, the company [501] having been permitted to remain in possession up to the time of the sale under the decree. The trustees in the mortgage claimed that these moneys should be applied in payment of the balance remaining unpaid on their mortgage bonds. This claim was denied. The court—following the previous case of *Galveston, H. & H. R. R. Co.* v. *Cowdrey*, 78 U. S. 11 Wall. 459 [20:199]—said: "It would have been competent for the court *in limine*, upon a proper showing, to appoint a receiver and clothe him with the duty of taking charge of the road and receiving its earnings, within such limit of time as it might see fit to describe. It might have done the same thing subsequently, during the progress of the suit. When the final decree was made, a receiver might have been appointed, and required to receive all the income and earnings until the sale was made and confirmed, and possession delivered over to the vendee. Nothing of this kind was done. There was simply a decree of sale. The decree was wholly silent as to the possession and earnings in the mean time. It follows that neither, during that period, was in anywise affected by the action of the court." Again: "It is clearly implied in these mortgages that the railroad company should hold possession and receive the earnings until the mortgagees should take possession, or the proper judicial authority should interpose. Possession draws after it the right to receive and apply the income. Without this the road could not be operated, and no profit could be made. * * * If the mortgagees were not satisfied, they had the remedy in their own hands, and could, at any moment, invoke the aid of the law, or interpose themselves without it. They did neither."

In *American Bridge Co.* v. *Heidelbach*, 94 U. S. 798, 800 [24:144] the mortgage included the rents, issues, and profits of the mortgaged property, so far as it was necessary to keep it in repair, and pledged such rents, issues and profits to the payment of the interest on the mortgage bonds as it matured, and to the creation of a sinking fund for the redemption and payment of the principal. In the event of a continuous default for six months in meeting the interest, the trustees, upon the written request of the holders of one half of the outstanding bonds, were authorized to take possession of the mortgaged premises, and receive [502] all rents and claims due and to become due to the company. In a contest between the trustees and a judgment creditor, as to which was entitled to certain moneys in the hands of the mortgagor, the decision was in favor of the creditor, the court saying: "In this case, upon the default which occurred, the mortgagees had the option to take personal possession of the mortgaged premises, or to file a bill, have a receiver appointed, and possession delivered to him. In either case, the income would thereafter have been theirs. Until one or the other was done, the mortgagor, as *Lord* Mansfield said in *Chinnery* v. *Blackman*, 3 Doug. 391, was 'owner to all the world, and entitled to all the profit made.'"

In *Kountze* v. *Omaha Hotel Co.* 107 U. S. 378, 392 [27:609, 615], it was held that a bond given on appeal with supersedeas, from a final decree of foreclosure and sale, did not cover rents and profits, or the use and detention of the property, pending the appeal. The court said that "in the case of a mortgage, the land is in the nature of a pledge; and it is only the land itself—the specific thing—which is pledged. The rents and profits are not pledged; they belong to the tenant in possession, whether the mortgagor or a third person claiming under him. * * * The taking of the rents and profits prior to the sale does not injure the mortgagee, for the simple reason that they do not belong to him. * * * But perception of rents and profits is the mortgagor's right until a final determination of the right to sell, and a sale made accordingly."

It is, of course, competent for the parties to

provide in the mortgage, for the payment of rents and profits to the mortgagee, even while the mortgagor remains in possession. But when the mortgage contains no such provision, and even where the income is expressly pledged as security for the mortgage debt, with the right in the mortgagee to take possession upon failure of the mortgagor to perform the conditions of the mortgage, the general rule is that the mortgagee is not entitled to the rents and profits of the mortgaged premises until he takes actual possession, or until possession is taken in his behalf, by a receiver; *Teal* v. *Walker* 111 U. S. 242 [28:415]; *Grant* v. *Phœnix L. Ins. Co.* 121 U. S. 117 [30:909]; or [503] until, in proper form, he demands and is refused possession. *Doe* v. *Memphis & L. R. R. Co.* 124 U. S. 652, 654 [31:565, 566]. See also *Sage* v. *Memphis & Little Rock R. R. Co.* 125 U. S. 361 [31:694].

The principles announced in these cases are decisive against the claim of the Trust Company to the rents of the property represented by the two drafts delivered by the United States to Wilson. Bradley's deed pledged the property, not the rents accruing therefrom, as security for the payment of his notes. It is true, it provides, generally, that the mortgagor may remain in possession and receive rents and profits until there is default upon his part. But the only effect of that provision was to open the way to compel him to submit to a sale and thereby lose possession. The deed did not give the mortgagee or the trustees the right, immediately upon such default, to take possession and appropriate the rents of the property. It only gave the trustees authority, when such default occurred, to sell upon short notice and, in that way, oust the mortgagor, and suspend his right to further appropriate the income of the property. Even if the deed had expressly pledged the income as security for the debts named, the mortgagor, according to the doctrines of the cases cited, would have been entitled to the income, until, at least, possession was demanded under the deed; or until his possession was disturbed by a sale under the deed of trust or, in advance of a sale, by having a receiver appointed for the benefit of the mortgagee. As was said in *Kountze* v. *Omaha Hotel Co.* 107 U. S. 395 [27:616], "courts of equity always have the power where the debtor is insolvent, and the mortgaged property is an insufficient security for the debt, and there is good cause to believe that it will be wasted or deteriorated in the hands of the mortgagor, as by cutting of timber, suffering dilapidation, etc., to take charge of the property, by means of a receiver, and preserve not only the *corpus* but the rents and profits, for the satisfaction of the debt. When justice requires this course to be pursued, and it is resorted to by the mortgagee, it will give him ample protection."

In the present case, it appears that prior to the time fixed for the sale under Bradley's deed of trust, and before the Trust Company filed its cross bill asking, among other things, for a [504] receiver of the rents of the mortgaged property, Bradley and Shepherd, with the consent of Shepherd's trustees, had pledged the rents of the property as security for Thompson's debts. As Bradley's deed of trust did not pledge the rents as security for his notes to the Trust Company, the pledge of such rents by himself and Shepherd, his assignee, for Thompson's benefit, did not violate any right secured to it; for as we have shown, until a sale was had, pursuant to the deed of trust, and possession taken under such sale, it had no right, by the terms of the deed, to take the income of the trust property. So that, if a receiver had been appointed immediately upon the filing, October 25, 1877, of the cross bill of the Trust Company, and if all the rents represented by the two drafts of $1,800 and $3,475 had been collected by the receiver, they would still, in virtue of the assignment of June 21, 1877, by Bradley and Shepherd, have belonged to Thompson, *as between him and the Trust Company;* unless, as contended, the transfer by Bradley to Shepherd of the lease to the United States and their assignment for the benefit of Thompson, are absolutely void, for every purpose, and as to everybody, under the provisions of the statutes relating to the transfer and assignment of contracts with or claims against the United States.

It is insisted by the Trust Company that the transfer by Bradley to Shepherd of the lease of June 6, 1873, was void under section 3737 of the Revised Statutes, which provides: "No contract or order, or any interest therein, shall be transferred by the party to whom such contract or order is given to any other party, and any such transfer shall cause the annulment of the contract or order transferred so far as the United States are concerned. All rights of action, however, for any breach of such contract by the contracting parties are reserved to the United States."

This provision was brought forward from an Act of Congress, approved July 17, 1862, entitled "An Act to Define the Pay and Emoluments of Certain Officers of the Army, and for Other Purposes." 12 Stat. at L. 596. In the original Act it immediately followed a section providing "that all contracts made for, or orders given for the purchase of goods or supplies by any department of the government, shall be [505] promptly reported to Congress by the proper head of such department, if Congress shall at the time be in session, and if not in session, said reports shall be made at the commencement of the next ensuing session." We are of opinion that, whatever may be the scope and effect of section 3737, it does not embrace a lease of real estate to be used for public purposes, under which the lessor is not required to perform any service for the government, and has nothing to do, in respect to the lease, except to receive from time to time the rent agreed to be paid. The assignment of such a lease is not within the mischief which Congress intended to prevent. Although a lease, such as Bradley made, is a "contract," in the broadest sense of that word, we are not prepared to hold that it is of the class of contracts, the transfer of which or of any interest therein is prohibited by section 3737.

It is also contended that the assignment made on June 21, 1877, by Bradley and Shepherd is void under section 3477 of the Revised Statutes, which provides that "all transfers and assignments made of any claim upon the United States, or of any part of it or share thereof, or interest therein, whether absolute or conditional, and whatever may be the con-

sideration therefor, and all powers of attorney, orders, or other authorities for receiving payment of any such claim or any part or share thereof, shall be absolutely null and void, unless they are freely made and executed in the presence of at least two attesting witnesses, after the allowance of such a claim, the ascertainment of the amount due and the issuing of a warrant for the payment thereof."

This court has frequently had occasion to construe this section. *U. S.* v. *Gillis*, 95 U. S. 407 [24: 503]; *Erwin* v. *U. S.* 97 U. S. 392 [24: 1065]; *Spofford* v. *Kirk*, Id. 484 [24: 1032]; *Goodman* v. *Niblack*, 102 U. S. 556 [26: 229]; *Bailey* v. *U. S.* 109 U. S. 432 [27: 988]; *St. Paul & D. R. R. Co.* v. *U. S.* 112 U. S. 733 [28: 861]; *Hobbs* v. *McLean*, 117 U. S. 567 [29: 940]. Undoubtedly, the lease made by Bradley to the United States created in his favor what, in some sense, was a "claim upon the United States" for each year's rent as it fell [506] due. And, if the statute embraces a claim of such a character, there could not have been any valid transfer or assignment of it in advance of its allowance, which could have been made the basis of a suit by the assignee against the United States, or which would compel the government to recognize the transfer or assignment. It is, perhaps, also true that, under some circumstances, the assignor, before the allowance of the claim and the issuing of the warrant, may disregard such an assignment altogether.

But when the government ascertained the amount of rent due under Bradley's lease, and, with his consent, allowed the same to him for the use of Shepherd, for the use of Taylor, Bacon, and Cross, trustees, we perceive nothing in the words or the policy of the statute preventing Thompson from asserting his rights either against the parties or any of them, named in the warrants issued by the government, or against the Trust Company, the mortgagee of the premises. The object of the statute, as was said in *Bailey* v. *U. S.* 109 U. S. 432 [27: 988], was to protect the government and not the claimant, and to prevent frauds upon the treasury; and that "an effectual means to that end was to authorize the officers of the government to disregard any assignment or transfer of the claim, or any power of attorney to collect it, unless made or executed after the allowance of the claim, the ascertainment of the amount due thereon, and the issuing of the warrant for the payment thereof." Here, the officers of the government chose to recognize the assignment, and of their action neither Bradley nor Shepherd, nor Shepherd's trustees, can rightfully complain. The government is acquitted of any liability in respect to the claim for rent, for its officers have acted in conformity with the directions, not only of the original claimant, but of his assignee, Shepherd, and of Shepherd's trustees. The simple question is whether the money received from the government shall be diverted from the purpose to which Bradley, Shepherd, and Shepherd's trustees agreed in writing that it should be devoted, namely, to the payment of the debts Thompson holds against Shepherd. This question must be answered in the negative; and in so adjudging we do not contravene the letter or the spirit of the statute relating to the assignment of claims upon the United States.

It only remains to say a word in reference to [507] that part of the decree giving to Shepherd's trustees the rent which Bradley, as receiver, collected. We have already shown that Bradley, not having pledged the income of the property to the Trust Company, could pledge it as security for debts held against him by other creditors. After executing the deed of 1873, he conveyed the premises to Shepherd, and also assigned to him the benefit of the lease made to the government. Shepherd included the premises in his deed to Taylor and others of November 15, 1876, and expressly agreed that the rents, issues, and profits therefrom should be applied in payments of the debts made in that deed. The right of those trustees to the rents, issues, and profits which accrued before any sale under Bradley's deed to the Trust Company, and prior to actual possession being taken under such sale, was, consequently, superior to any that Company had. That right could not be defeated by anything the Company did, whether by means of a receiver or otherwise. Whether the money in the hands of the receiver belonged to Thompson rather than to Shepherd's trustees is a question not before us, since Thompson has not appealed from the decree.

Upon the whole case, we are of opinion that there is no error in the decree to the prejudice of either of the appellants, and it is, in all respects, affirmed.

JOHN NOYES, *Appt.*, [348]

v.

LEE MANTLE ET AL.

(See S. C. Reporter's ed. 348-354.)

Mining claim—when property of locator—when "known to exist."

1. Section 2333, Revised Statutes, has no application to lodes or veins within the boundaries of a placer claim which have been previously located under the laws of the United States, and are in possession of the locators or their assigns.
2. Such locations, when perfected under the law, are the property of the locators or their assigns, and are not therefore subject to the disposal of the government.
3. Where a location of a vein or lode has been made under the law, and its boundaries have been specifically marked on the surface, so as to be readily traced, and notice of the location is recorded in the usual books of record within the district, the vein or lode is "known to exist," within the meaning of the statute, although personal knowledge of the fact may not be possessed by the applicant for a patent of a placer claim.

[No. 242.]

Argued April 19, 1888. Decided April 30, 1888.

APPEAL from a judgment of the Supreme Court of the Territory of Montana, affirming a decree of the District Court of that Territory in favor of plaintiffs, the appellees, in a suit in equity to determine the adverse claims to a mining claim. *Affirmed.*

Reported below in 5 Montana, 274.

The facts are stated in the opinion.

Mr. Thos. L. Napton, for appellant:

As plaintiffs did not file an adverse claim to

the placer application for patent they lost their title.

Heydenfeldt v. *Daney Gold & S. Min. Co.* 93 U. S. 635 (23:995); *Moore* v. *Smaw*, 17 Cal. 200; *Ah Yew* v. *Choate*, 24 Cal. 562.

The words "known to exist" have been frequently interpreted by this court in other statutes.

Morton v. *Nebraska*, 88 U. S. 21 Wall. 674 (22:645); *Deffeback* v. *Hawke*, 115 U. S. 392 (29:423); *Colorado Coal & Iron Co.* v. *U. S.* 123 U. S. 307 (31:152.)

Mr. **S. S. Burdett**, for respondents:

A lode claim is property which may be bought, sold, and conveyed, and will pass by descent.

Little Pittsburgh Con. Min. Co. v. *Amie Min. Co.* 17 Fed. Rep. 57; *Kinney* v. *Consolidated Va. Min. Co.* 4 Sawy. 382; *Forbes* v. *Gracey*, 94 U. S. 762 (24:313); *Belk* v. *Meagher*, 104 U. S. 279 (26:735).

A patent which purports to convey lands previously sold or reserved is so far void.

Polk v. *Wendal*, 13 U. S. 9 Cranch, 87 (3:665); *Patterson* v. *Winn*, 24 U. S. 11 Wheat. 380 (6:500); *Reichert* v. *Felps*, 73 U. S. 6 Wall. 160 (18:849); *Best* v. *Polk*, 85 U. S. 18 Wall. 112 (21:805); *Morton* v. *Nebraska*, 88 U. S. 21 Wall. 660 (22:639); *Steel* v. *St. Louis Smelting & Ref. Co.* 106 U. S. 452 (27:228).

Want of power to issue a patent may be shown in a court of law.

Sherman v. *Buick*, 93 U. S. 209-216 (23:849-851.)

An objection not taken in the court below cannot be considered here.

Wilson v. *McNamee*, 102 U. S. 572 (26:234); *Edwards* v. *Elliott*, 88 U. S. 21 Wall. 532 (22:487); *Wood* v. *Weimar*, 104 U. S. 795 (26:781).

[349] *Mr. Justice* **Field** delivered the opinion of the court:

This is a suit in equity to determine the adverse claims of the defendant below, appellant here, to a certain quartz lode mining claim, known as the Pay Streak Lode in Summit Valley Mining District, in the County of Silver Bow, in the Territory of Montana. The plaintiffs below assert title to the claim as grantees of Daniel Zinn and John O. McEwan, who discovered and located it on the 23d of April, 1878, under the provisions of the Act of Congress of May 10, 1872, which are re-enacted in the Revised Statutes, title 32, chapter 6.

The defendant below asserts title to the lode claim under a patent of the United States issued to him on the 23d of April, 1880, for a placer mining claim, which includes that lode within its boundaries. The application for the patent was made December 14, 1878.

Several interrogatories touching matters in issue were submitted to a jury called by the court, though sitting in the exercise of its equity jurisdiction. Their findings in answer to the interrogatories were, with one exception, adopted by the court. The excepted finding gave an erroneous date to the application of the defendant for the patent, and was therefore set aside. The court thereupon found the fact as to the date as it appeared from the evidence. Upon the facts thus established the court rendered its decree. They, were substantially these: That on and prior to December 14, 1878, a vein or lode of quartz-bearing gold and silver was known to exist in the ground in controversy; that its existence could have been readily ascertained by any person examining the ground with an honest purpose to inform himself of the fact; that in the month of April, 1878, Zinn and McEwan, the grantors and predecessors in interest of the plaintiffs, discovered in the ground a vein or lode of quartz-bearing gold and silver, and they posted a notice claiming the ground, and the vein or lode which it included; that at the same time they marked off the ground by stakes so that its boundaries could be readily traced; that they named the claim in their notice of location as the Pay Streak Lode, and within twenty days after its discovery filed in the proper office of the county a notice of their claim, and of its location, such as was usual where lode claims were located in that mining district; that in July, 1881, they conveyed to the plaintiffs all their interest in the claim; that in August, 1881, before the commencement of this suit, the plaintiffs caused a survey of the claim to be made, and its boundaries marked so as to be readily traced; that they then relocated the claim, of which notice within twenty days thereafter was filed in the recorder's office of the county; and that they were in its possession at the commencement of this suit.

The jury did not find that the existence of a vein or lode in the ground in controversy was known to the defendant at the time of his application for a patent; and reported that they were unable to agree on this point. The district court, in which the suit was brought, did not consider that this want of a finding on the question of knowledge by the defendant affected the position of the plaintiffs, and it rendered a decree adjudging that the right of possession to the lode claim was in them, and that the defendant had no title, estate, or interest therein, and that he be enjoined from asserting or claiming any as against them. The Supreme Court of the Territory affirmed the decree, holding that the title to the lode mining claim had passed to the grantors of the plaintiffs by their discovery and location under the statute, and that the subsequent patent to the defendant of a placer claim did not affect their title to the lode claim, for that title was not then subject to the disposition of the government. The court also held that the lode claim was known to exist within the meaning of the statute when it had been located pursuant to its requirements, whether knowledge of its existence was possessed or not by the defendant at the time he made his application for a patent. These rulings constitute the only matters meriting consideration in this court.

Section 2322 of the Revised Statutes, re-enacting provisions of the Act of Congress of May 10, 1872, 17 Stat. at L. 91, declares that the locators of mining locations previously made or which should thereafter be made, on any mineral vein, lode, or ledge on the public domain, their heirs and assigns, where no adverse claim existed on the 10th of May, 1872, shall have the exclusive right of possession and enjoyment of all the surface included within the lines of their locations, so long as they comply with the laws of the United States, and with state, territorial, and local regulations, not in conflict with those laws governing their posses-

sory title. There is no pretense in this case that the original locators did not comply with all the requirements of the law in making the location of the Pay Streak Lode mining claim, or that the claim was ever abandoned or forfeited. They were the discoverers of the claim. They marked its boundaries by stakes, so that they could be readily traced. They posted the required notice, which was duly recorded in compliance with the regulations of the district. They had thus done all that was necessary under the law for the acquisition of an exclusive right to the possession and enjoyment of the ground. The claim was thenceforth their property. They needed only a patent of the United States to render their title perfect, and that they could obtain at any time upon proof of what they had done in locating the claim, and of subsequent expenditures to a specified amount in developing it. Until the patent issued the government held the title in trust for the locators or their vendees. The ground itself was not afterwards open to sale. The location having become completed in April, 1878, antedates by some months the application of the defendant for a patent for his placer claim. That patent was subject to the conditions of section 2333 of the Revised Statutes, which is as follows:

[352] "Where the same person, association, or corporation is in possession of a placer claim, and also a vein or lode included within the boundaries thereof, application shall be made for a patent for the placer claim, with the statement that it includes such vein or lode, and in such case a patent shall issue for the placer claim, subject to the provisions of this chapter, including such vein or lode, upon the payment of five dollars per acre for such vein or lode claim, and twenty-five feet of surface on each side thereof. The remainder of the placer claim, or any placer claim not embracing any vein or lode claim, shall be paid for at the rate of two dollars and fifty cents per acre, together with all costs of proceedings; and where a vein or lode, such as is described in section twenty-three hundred and twenty, is known to exist within the boundaries of a placer claim, an application for a patent for such placer claim which does not include an application for the vein or lode claim shall be construed as a conclusive declaration that the claimant of the placer claim has no right of possession of the vein or lode claim; but where the existence of a vein or lode in a placer claim is not known, a patent for the placer claim shall convey all valuable mineral and other deposits within the boundaries thereof."

This section was before us for consideration in *Reynolds* v. *Iron Silver Mining Company*, at October Term, 1885, 116 U. S. 687 [29:774], and also at the present term, 124 U. S. 374 [31:466]. As stated by the court at both times, it makes provision for three classes of cases:

1. When one applies for a placer patent, who is at the time in the possession of a vein or lode included within its boundaries, he must state the fact, and then, on payment of the sum required for a vein claim and twenty-five feet on each side of it at $5 an acre, and $2.50 an acre for the placer claim, a patent will issue to him covering both claim and lode.

2. Where a vein or lode, such as is described in a previous section, is known to exist at the time within the boundaries of the placer claim, the application for a patent therefor, which does not also include an application for the vein or lode, will be construed as a conclusive declaration that the claimant of the placer claim has no right of possession to the vein or lode.

3. Where the existence of a vein or lode in a [353] placer claim is not known at the time of the application for a patent, that instrument will convey all valuable mineral and other deposits within its boundaries.

The section can have no application to lodes or veins within the boundaries of a placer claim which have been previously located under the laws of the United States, and are in possession of the locators or their assigns; for, as already said, such locations when perfected under the law are the property of the locators, or parties to whom the locators have conveyed their interest. As said in *Belk* v. *Meagher*, 104 U. S. 279, 283 [26:735, 737]: "A mining claim perfected under the law is property in the highest sense of that term, which may be bought, sold, and conveyed, and will pass by descent." It is not, therefore, subject to the disposal of the government. The section can apply only to lodes or veins not taken up and located so as to become the property of others. If any are not thus owned, and are known to exist, the applicant for the patent must include them in his application, or he will be deemed to have declared that he had no right to them. *Sullivan* v. *Iron Silver Min. Co.* 109 U. S. 550, 554 [27:1028, 1030].

When can it be said that a vein or lode is "known to exist" within the meaning of the section? In *Reynolds* v. *Iron Silver Mining Company*, when first here, the court said that it might not be easy to define the words "known to exist;" and as it was not necessary to determine whether the knowledge must be traced to the applicant for the patent, or whether it was sufficient that it was generally known, and what kind of evidence was necessary to prove this knowledge, it was better that the questions should be decided as they arise. When the case was here a second time the court said that the language of the section appeared to be sufficiently intelligible in a general sense, and yet it became difficult of interpretation, when applied to the determination of rights asserted to such veins or lodes, from the possession or absence of knowledge at the time application is made for a patent; and that if a general knowledge of their existence were held sufficient, the inquiry would follow as to what would constitute such knowledge, so as [354] to create an exception to the grant, notwithstanding the ignorance of the patentee. These suggestions indicated the difficulties of some of the questions which might arise in the application of the statute; but in the present case we think that difficulty does not exist. Where a location of a vein or lode has been made under the law, and its boundaries have been specifically marked on the surface, so as to be readily traced, and notice of the location is recorded in the usual books of record within the district, we think it may safely be said that the vein or lode is known to exist, although personal knowledge of the fact may not be pos-

sessed by the applicant for a patent of a placer claim. The information which the law requires the locator to give to the public must be deemed sufficient to acquaint the applicant with the existence of the vein or lode.

A copy of the patent is not in the record, so we cannot speak positively as to its contents; but it will be presumed to contain reservations of all veins or lodes known to exist, pursuant to the statute. At any rate, as already stated, it could not convey property which had already passed to others. A patent of the government cannot, any more than a deed of an individual, transfer what the grantor does not possess.

Judgment affirmed.

JACOB O. JOYCE, *Appt.*,

[557] *v.*

CHILLICOTHE FOUNDRY AND MACHINE WORKS COMPANY ET AL.

(See S. C. Reporter's ed. 557-562.)

Infringement of letters patent.

In an action for the infringement of letters patent granted to Jacob O. Joyce for an improvement in lifting-jacks,—*Held*, that the first claim of the patent is limited to a pawl moving by gravity alone in inclined slots, grooves or guides formed in the frame; that the pawl in defendant's jack will not operate by gravity alone; and that therefore there has been no infringement.

[No. 149.]

Argued Jan. 26, 1888. Decided May 14, 1888.

APPEAL from a decree of the Circuit Court of the United States for the Southern District of Ohio, dismissing a suit for the infringement of letters patent. *Affirmed.*

Reported below in 15 Fed. Rep. 260.

The facts are stated by the court.

Messrs. **E. E. Wood** and *Edward Boyd*, for appellant.

(No counsel appeared for appellees.)

[558] *Mr. Justice* **Blatchford** delivered the opinion of the court:

This is a suit in equity, brought in the Circuit Court of the United States for the Southern District of Ohio, by Jacob O. Joyce against the Chillicothe Foundry and Machine Works Company and F. M. De Weese, to recover for the infringement of letters patent of the United States, No. 154,989, granted to Jacob O. Joyce, September 15, 1874, for an improvement in lifting-jacks, on an application filed March 16, 1874.

The specification, claims, and drawings of the patent are as follows:

"Be it known that I, Jacob O. Joyce, of Carlisle Station, Warren County, Ohio, have invented certain improvements in lever-jacks, of which the following is a specification:

"My invention relates to the pawl of such jacks; and its objects are, first to substitute the weight of the pawl, sliding in inclined slots, grooves, or guides, for the elastic spring usually employed to press it against the teeth of the ratchet bar; and, second, to obtain greater strength by dividing the load among several teeth of the pawl and ratchet bar, instead of supporting it all on one tooth, as is commonly done.

[559]

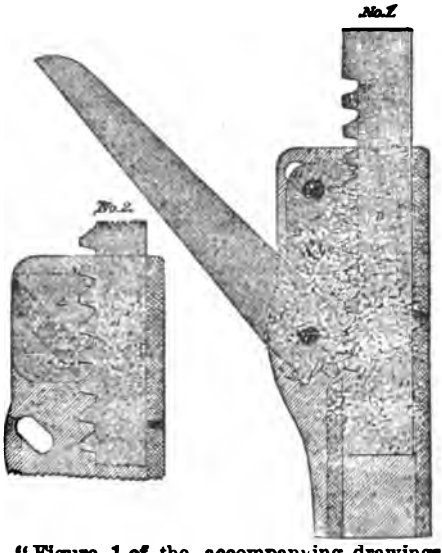

"Figure 1 of the accompanying drawings is a vertical section of so much of a jack as is necessary to show my improvements; and Fig. 2 is a modification of the same, in which the pins and slots of Fig. 1 are exchanged for the tongue and groove in Fig. 2.

"Referring to Fig. 1, A is the pawl, having teeth that engage with the teeth of the ratchet bar B. D D′ are slots in the frame of the jack, inclined to the axis of the ratchet bar at the angle of about forty-five degrees, in which slots move the pins C C′ of the pawl A.

"The operation is seen at a glance. When the ratchet bar is raised its teeth crowd or slide the pawl up the inclined slots out of the way, [560] so as to allow it to pass, until it has traveled the length of a tooth, when the weight of the pawl causes it to fall back into the next tooth below, ready to hold the ratchet bar at the point gained, ready for another lift, and so on.

"In Fig. 2, instead of slots D D′, there is a tongue, D, on each side of the pawl, with corresponding grooves in the frame of the jack, in which the said tongues move; or the tongues may be on the frame, with the grooves in the pawl; the tongues and grooves performing the same office that the pins and slots do in the form of construction shown in Fig. 1.

"Other modifications, involving the same principle of operation, may be possible; but I prefer the construction represented in Fig. 1, at the same time not limiting myself strictly to that, but claiming any equivalent arrangement by which the same objects are accomplished in substantially the same manner.

"I claim as my invention:

"1. A pawl for lever jack with two or more teeth, and adapted to move in inclined slots, grooves, or guides formed in the frame, substantially as described.

"2. The combination of the pawl A with its pins C C′, slots D D′, and ratchet bar B, substantially as described."

Each defendant put in a separate answer, alleging want of novelty, and setting forth sundry

prior patents in which it was averred the invention was contained, and also giving the names of sundry prior inventors. Each answer denied infringement. The answer of the Company averred that it had made for its codefendant parts of lifting-jacks in accordance with letters patent of the United States granted to Samuel Mosler, No. 168,663, dated October 11, 1875; No. 172,471, dated January 18, 1876; and No. 194,711, dated August 28, 1877. Issue was joined and proofs were taken on both sides, and the circuit court dismissed the bill with costs. Its decision is reported in 15 Fed. Rep. 260.

In the opinion of the circuit court it is said: "The specifiation describes, and the drawings show, a frame with parallel sides, between which a pawl moves in parallel slots in the frame, forming guideways inclined toward [561] the vertically-moving ratchet bar. The pawl is provided with a series of teeth on the face adjacent to the ratchet bar, and, at opposite sides, with projections or lugs engaging in the inclined slots of the frame. The guide slots are inclined at an angle of 45 degrees or thereabouts, and the pawl is actuated solely by gravity to move down the inclines, and engage its teeth with those of the ratchet bar; and the patentee states, in his specification, as one of the objects of the invention, his purpose to utilize the gravity of the pawl itself, thus arranged as a substitute for a spring."

The clear statement of the specification in this respect is that the first object of the invention is "to substitute the weight of the pawl, sliding in inclined slots, grooves, or guides, for the elastic spring usually employed to press it against the teeth of the ratchet bar." The specification also says, that, "when the ratchet bar is raised, its teeth crowd or slide the pawl up the inclined slots out of the way, so as to allow it to pass, until it has traveled the length of a tooth, when the weight of the pawl causes it to fall back into the next tooth below, ready to hold the ratchet bar at the point gained, ready for another lift, and so on." These are plain statements, that the weight of the pawl, unaided by any spring, is to be used to cause the pawl to fall back into the next tooth below, after the ratchet bar has traveled the length of a tooth, such weight of the pawl being employed to press it against the teeth of the ratchet bar, in place of the use of an elastic spring for that purpose. The inclined slots, grooves, or guides formed in the frame, in which the pawl moves are the slots D D′, made in the frame of the jack, and "inclined to the axis of the ratchet bar at the angle of about forty-five degrees," in which slots the pins C C′ of the pawl move. The specification states that, instead of such slots in the frame of the jack, there may be grooves in such frame, one on each side of the pawl, in which a tongue on each side of the pawl moves; or there may be tongues on the frame and grooves in the pawl; the tongues and grooves performing the same office that the pins and slots do in the first form of construction.

In the opinion of the circuit court the following [562] statement is made as to the defendants' jack, which we deem to be correct: "The defendants manufacture a jack having a many-toothed pawl resting at its bottom upon a seat slightly inclined toward the rack bar, and actuated by a spring placed behind it within the frame. The inclination of the seat is not sufficient to actuate the pawl by gravity, nor are there any slots or other means of guiding the pawl in the sides of the frame; the function of the inclined seat being rather to assist the spring in preventing a backward slip of the pawl when under pressure, than to facilitate the forward movement of the pawl, although to the latter result it may contribute in a slight degree."

The plaintiff claims that the defendants use their spring to start the movement of the pawl upon an incline having a less angle than that mentioned in the specification of the patent, and employ an inclined seat for the pawl to effect the holding of the load; and that they thus infringe the first claim of the patent. But we are of opinion, upon the whole evidence, that in the defendants' jack the spring is used to press the pawl against the teeth of the ratchet bar, within the meaning of the specification of the patent; that the jack made by the defendants would not be and is not, as constructed by them, and put upon the market, a practically operative instrument without the use of the spring; that the pawl in it will not operate by gravity alone so as to make it an efficient or safe machine; and that there are no slots, grooves or guides formed in the frame, to guide the pawl, in the sense of the first claim of the plaintiff's patent.

We concur with the court below in holding that the first claim of the patent must be limited to a pawl moving by gravity alone in inclined slots, grooves, or guides formed in the frame, and that, therefore, there has been no infringement of the first claim.

It is not alleged that the second claim has been infringed.

The decree of the Circuit Court is affirmed.

GLACIER MOUNTAIN SILVER MINING COMPANY, *Plff. in Errr.*, [471]
v.
J. FRANK WILLIS ET AL.

(See S. C. Reporter's ed. 471-482.)

Pleading in ejectment—description of property—demurrer—sufficiency of complaint—extent of tunnel—mineral locations.

1. The strict rule of pleading which formerly required exact accuracy in the description of premises sought to be recovered has, in modern practice, been relaxed, and a general description of the property is good.

2. It is not necessary that the property sought to be recovered should be described by its metes and bounds; a description by name, where the property is well known, is often sufficient.

3. In an action for the recovery of a tunnel and tunnel site in a mining district, it is not good ground of demurrer to the complaint that the lodes alleged to be embraced within the tunnel site location, are not each separately described; a statement in the complaint that all the lodes in the tunnel claim have been worked and mined by the plaintiff, and its grantors, comprehends every part of the property for the recovery of which the action is brought.

4. As the complaint alleges that a valid and legal location of the tunnel was made by persons under whom the plaintiff claims, and that the plaintiff held possession of the same for more than five consecutive years prior to the ouster by defendants,

and paid all the taxes during that period upon the property, it sets up a right in the plaintiff, to the premises in dispute, superior to any other claim, except that of the government.

5. Where the complaint alleges a claim to a tunnel 5,000 feet in length, it is not good ground of demurrer thereto that the statute recognizes a right of only 3,000 feet from the mouth of the tunnel. Such allegation does not render the whole claim void; the location would be good to the extent of 3,000 feet at least.

6. All mineral locations are to be governed by the local rules and customs in force at the time of the location, when such location was made prior to the passage of any mineral law by Congress.

[No. 166.]

Argued Feb. 6, 1888. Dismissed for want of jurisdiction, same day. Motion to vacate judgment of dismissal submitted Feb. 7, 1888. Leave granted Feb. 13, 1888, to file affidavits as to value of matter in controversy on or before March 2. Affidavits submitted March 20. Motion to vacate judgment granted April 2, 1888. Case submitted April 9, 1888. Decided May 14, 1888.

IN ERROR to the Circuit Court of the United States for the District of Colorado, to review a judgment of that court sustaining a demurrer to the complaint in an action to recover possession of a mining claim. *Reversed.*

The facts are stated in the opinion.

Messrs. Walter H. Smith and *Ellery C. Ford*, for plaintiff in error:

If the tunnel claim of the plaintiff were excessive, it was not void.

Richmond Min. Co. v. *Rose*, 114 U. S. 576 (29:273).

Locations are to be governed by the local rules and customs in force at the time of the location.

Jackson v. *Roby*, 109 U. S. 441 (27:990); *Chambers* v. *Harrington*, 111 U. S. 352 (28:453).

(No counsel appeared for defendants in error and no brief was filed.)

Mr. Justice **Lamar** delivered the opinion of [472] the court:

This is a writ of error to the Circuit Court of the United States for the District of Colorado to review a judgment of that court sustaining a demurrer to the "second amended complaint" filed by the Glacier Mountain Silver Mining Company, plaintiff in error, against J. Frank Willis, Charles Buckland, and Donald M. Frothingham, defendants in error, which complaint is in the words and figures following, to wit:

"For second amended complaint the plaintiff complains and alleges that it is a corporation organized and existing under the laws of the State of Ohio and is a citizen of the State of Ohio; that the defendants are and each of them is a citizen of the State of Colorado, and that the property in controversy exceeds the value of $500.

"Plaintiff further alleges that on the 21st day of June, 1865, one Joseph Coley and one George C. Reeves, each being a citizen of the United States, went upon the public domain of the United States, theretofore wholly unoccupied and unclaimed, and located on said day a tunnel and tunnel site at the base of Glacier Mountain, in Snake River mining district, County of Summit, State of Colorado.

"That afterwards and on the same day they marked the boundaries of their said location and commenced to run a tunnel into said Glacier Mountain, and, after fully complying with the laws of the United States, the laws of the State of Colorado, and the local rules and regulations of the said Snake River mining district, they caused to be made out and recorded in the recorder's office of the County of Summit aforesaid a location certificate of said tunnel claim, [473] which said certificate described the location and boundaries of said tunnel claim.

"That from the day of said location until the ouster hereinafter set forth, the said locators of said tunnel claim and their grantees remained continuously in possession of said tunnel claim, working and mining thereon, and have expended thereon more than the sum of $5,000.

"That the plaintiff is the owner of the said tunnel claim above described by location and purchase, and is now entitled to the quiet and peaceable and exclusive possession thereof by virtue of a full compliance on its part and on the part of its grantors with the laws, rules, and customs above set forth; that the plaintiff and its grantors have been in the peaceable and undisputed possession of said tunnel claim, by virtue of such location, occupation, pre-emption, and record, for more than five years prior to the ouster hereinafter complained of.

"That plaintiff and its grantors, for more than five consecutive years prior to the acts of the defendants hereinafter mentioned, paid all taxes legally or otherwise assessed upon said tunnel claim, and have worked and mined the same from said 21st day of June, 1865, up to the time of the acts of the defendants hereinafter set forth.

"That the said tunnel claim so located embraces many valuable lodes or veins which have been discovered, worked and mined by the plaintiff and its grantors.

"That the said tunnel claim was by its locators named the Silver Gate tunnel claim, and is described more fully as follows: Commencing at the base of said Glacier Mountain east of Bear Creek, and running southeast and parallel with Coley tunnel through said mountain five thousand feet from the mouth or starting point of said tunnel at a stake marked and in or at the mouth of said Silver Gate tunnel, and two hundred and fifty feet northeast and two hundred and fifty feet southwest from said stake or tunnel to its termination.

"Said tunnel site is situate on Glacier Mountain, in Snake River mining district, County of Summit and State of Colorado, and is five thousand feet in length by five hundred feet in width.

"Plaintiff further alleges that while it was [474] in the quiet and peaceful possession of said tunnel claim and every part thereof the defendants, wrongfully and without right and without consent of the plaintiff, to wit, on or about the 2d day of July, 1883, entered upon the premises and into said tunnel so run by plaintiff and its grantors on said claim, and wrongfully and unlawfully ousted the plaintiff therefrom, claiming the said tunnel as the War Eagle.

"That on or about said last mentioned date the defendants, without right, made a pretended location of a lode claim across said tunnel

and within said tunnel claim, and therein wrongfully ousted the plaintiff therefrom, claiming that they had discovered a lode which they called the Tempest lode.

"That the defendants have ever since hitherto unlawfully and wrongfully withheld the possession of the said premises and tunnel claim from the plaintiff, to its damage in the sum of $1,000.

"Wherefore plaintiff demands judgment against the defendants:

"1. For the recovery of the possession of said Silver Gate tunnel, tunnel site and claim.

"2. For the sum of $1,000 damages for the wrongful withholding thereof.

"3. For costs of suit."

The demurrer of the defendants rested upon four grounds:

"First. That the property sought to be recovered in this action is not described by its legal subdivisions nor by its metes and bounds.

"Second. That the lodes alleged to be embraced within the said tunnel site location, and for which a recovery is asked by the said plaintiff, are not mentioned nor described, nor any location of them or any of them alleged.

"Third. That said complainant does not show any valid and legal subsisting pre-emption or location of said Silver Gate tunnel site.

"Fourth. That the claim of the said plaintiff to a strip of ground 5,000 feet in length by 500 feet in width as a tunnel site is unwarranted [175] and unprecedented and was not at the date of said pretended location nor at any time subsequent thereto authorized by any local, state, or congressional law."

The opinion of the court below is not found in the record, and we are not advised by brief [180] or otherwise as to the grounds upon which the court sustained the demurrer. We must, therefore, determine the issues presented in the case by reference to the bill of complaint, and to the causes assigned for demurrer.

First. That the property sought to be recovered in this action is not described by its legal subdivisions nor by its metes and bounds. We do not think this ground is tenable. The complaint, after setting forth the location by plaintiff's grantors of the tunnel and tunnel site in Snake River mining district, Summit County, Colorado, at the base of the Glacier Mountain, states that they (said grantors) caused to be made out and recorded in the recorder's office of the county aforesaid a location certificate of said tunnel claim, which said certificate described the location and boundaries of said tunnel claim; that the said tunnel claim was by its locators named the Silver Gate tunnel claim, and is described more fully as follows: "Commencing at the base of said Glacier Mountain east of Bear Creek, and running southeast and parallel with Coley tunnel through said mountain five thousand feet from the mouth or starting point of said tunnel at a stake marked and in or at the mouth of said Silver Gate tunnel, and two hundred and fifty feet northeast and two hundred and fifty feet southwest from said stake or tunnel to its termination."

We think this description is sufficiently plain and distinct to enable the sheriff in case of a recovery to execute a writ of possession, or to enable a surveyor to ascertain the exact limits of the location. The strict rule of pleading which formerly required exact accuracy in the description of premises sought to be recovered has, in modern practice, been relaxed, and a general description of the property held to be good. The provisions of state statutes as to the description of the premises by metes and bounds have been held to be only directory, and a description by name where the property is well known is often sufficient.

As to the 2d cause of demurrer, we think that, though the lodes alleged to be embraced within the said tunnel site location are not each separately described, the statement in the complaint that all the lodes in the tunnel claim have been worked and mined by the plaintiff and its [481] grantors comprehends every part of the property for the recovery of which the action is brought.

With reference to the 3d ground of the demurrer, it is only necessary to say that the complaint alleges that a valid and legal location of said tunnel was made by persons under whom the plaintiff claims, and that the plaintiff held possession of the same for more than five consecutive years prior to the ouster by the defendants, and paid all the taxes during that period legally or otherwise assessed upon said property. This, under the laws of Colorado, would give the plaintiff a right to the premises in dispute superior to any other claim, except that of the government.

The 4th ground of demurrer is: "That the claim of the said plaintiff to a strip of ground 5,000 feet in length by 500 feet in width as a tunnel site is unwarranted and unprecedented, and was not at the date of said pretended location nor at any time subsequent thereto authorized by any local, state or congressional law." Under § 2323 U. S. Rev. Stat., the right is given to locate a tunnel 3,000 feet from the face of said tunnel, and the right is also given to the lodes discovered in said tunnel "to the same extent as if discovered from the surface," which is 300 feet on each side of the tunnel. Under the local laws of Colorado the right is given to "250 feet each way from said tunnel on each lode so discovered." 1801, § 5, Gen. Laws Col. 627. The objection presented by the demurrer is that the tunnel is 5,000 feet in length, whereas the statute only recognizes a right of 3,000 feet from the mouth thereof, and that this renders the whole claim void.

We do not assent to this proposition. The location would be good to the extent of 3,000 feet at least. *Richmond Min. Co.* v. *Rose*, 114 U. S. 576, 580 [29: 273, 274]. This would be true had the location been made under the mining laws now in force. It will be observed, however, that this location was made prior to the passage of any general mineral law. It was made in 1865, and the first general statute passed by Congress on the subject is that of July 26, 1866. It is alleged by the plaintiff in error that this location was made in accordance with the local rules and customs of miners in [482] force at the time of the location, and that, therefore, such location was recognized and protected by the general mineral laws of July 26, 1866, 14 Stat. at L. 251, and that of May 10, 1872, 17 Stat. at L. 91. This allegation, however, is denied by the defendants; but as these local rules and customs differ in the several mining districts as to the extent and character of the

mine, the question cannot properly be determined on demurrer.

The Land Department of the Government, and this court also, have always acted upon the rule that all mineral locations were to be governed by the local rules and customs in force at the time of the location, when such location was made prior to the passage of any mineral law by Congress. *Jennison* v. *Kirk*, 98 U. S. 453, 457 [25:240, 242]; *Broder* v. *Natoma Water & Min. Co.* 101 U. S. 274, 276 [25:790, 791]; *Jackson* v. *Roby*, 109 U. S. 440, 441 [27:990]; *Chambers* v. *Harrington*, 111 U. S. 350, 352 [28:452, 453].

We are, therefore, of the opinion that the cause of action is plainly and fully set forth in the complaint, and that the judgment of the court below cannot be sustained on any ground presented by the record.

The judgment of the Circuit Court is therefore reversed, and the cause remanded to that court for such further proceedings as are consistent with this opinion. So ordered.

---

[563] GEORGE FLOWER AND THOMAS FLOWER, EXRS. of JAMES FLOWER, Deceased, ET AL., *Appts.*,

v.

CITY OF DETROIT ET AL.

(See S. C. Reporter's ed. 563-572.)

Reissued patent for improved hydrants—enlarged claim—reissue invalid—original specification—first claim of reissue—laches—claim anticipated.

1. In the specification of the reissued letters patent, No. 6990, granted to Thomas R. Bailey, Jr., for an improvement in hydrants, it is stated and claimed that the casing C is movable, and that sufficient space is left between the upper terminus of the casing and the bead or flange above it to allow the casing to slide loosely up and down. No suggestion of such arrangement or space is found or shown in the specification or drawing of the original patent. This is new matter, introduced into the specification of the reissue, contrary to the express inhibition of section 4916, Revised Statutes.

2. Claim 1 of the reissue is for an invention not indicated or suggested in the original patent; namely, the independent up-and-down motion of the casing.

3. The reissued patent was invalid, as matter of law, upon a comparison of the original with the reissue.

4. What was suggested in the original specification, or patent office model, is not to be considered as part of the invention intended to have been covered by the original patent, unless the original specification indicated that the thing thus suggested was embraced in the invention intended to have been secured by the original patent.

5. *Held*, in the present case, that it cannot be seen, from a comparison of the two patents, that the original specification indicated that what is covered by the first claim of the reissue was intended to have been secured by the original.

6. As the reissue in the present case was not applied for until nearly eight years after the original patent was granted, *held*, that the reissue was taken with a manifest intention of covering, by an enlarged claim, structures which, in the mean time, had gone into extensive public use, and which were not covered by any claim of the original patent.

7. *Held* further, that the casing of claim 3 must be construed to be the casing exhibited in the drawing annexed to the original patent; and if such casing is only a casing which has no end play, it is anticipated by letters patent No. 19,206, granted to Race & Matthews January 26, 1858.

[No. 203.]

Argued April 3, 1888. Decided May 14, 1888.

APPEAL from a decree of the Circuit Court of the United States for the Eastern District of Michigan, dismissing a suit for the infringement of reissued letters patent No. 6990 granted March 14, 1876, to Thomas R. Bailey, Jr., for an improvement in hydrants.

Affirmed.

Reported below in 22 Fed. Rep. 292.

The facts are fully stated in the opinion.

Mr. **Edward J. Hill,** for appellants:

It is the specification which governs and the drawings merely illustrate.

Hogg v. *Emerson*, 52 U. S. 11 How. 587, 606 (13:824, 833); *S. C.* 47 U. S. 6 How. 485 (12:525).

This is a claim for a result or effect.

Case v. *Brown*, 69 U. S. 2 Wall. 320 (17:817).

The first claim of the reissue is identical with the second claim of the original.

Winans v. *New York & E. R. R. Co.* 62 U. S. 21 How. 88 (16:68); *Furbush* v. *Cook*, 2 Fish. Pat. Cas. 668.

The claim is for the hydrant itself constructed and arranged as described.

Winans v. *Schenectady & T. R. R. Co.* 2 Blatchf. 279.

The new parts are as distinctly pointed out by means of the words "with," "and with," as if separately numbered.

Tuck v. *Bramhill*, 6 Blatchf. 95; *Taylor* v. *Archer*, 8 Blatchf. 318; *Silsby* v. *Foote*, 55 U. S. 14 How. 218 (14:394); *Providence Rubber Co.* v. *Goodyear*, 76 U. S. 9 Wall. 795 (19:568).

The record we proved by a sworn copy.

1 Greenl. Ev. § 496; *Evanston* v. *Gunn*, 99 U. S. 660 (25:306).

The records are received in courts of justice as evidence of the facts stated.

Galt v. *Galloway*, 29 U. S. 4 Pet. 343 (7:880).

The original specification was clear enough to be understood by ordinary mechanics.

Hogg v. *Emerson*, 47 U. S. 6 How. 473 (12:530).

The sole question involved, one of fact, was forever settled by the commissioner when he granted the reissue. Did he act erroneously? Then the only remedy was by interference and suit under section 4915. Did he act corruptly? Then the remedy was by *quo warranto*.

Mowry v. *Whitney*, 81 U. S. 14 Wall. 439 (20:859).

In case of a mistake under section 4916, no limitation as to the time of granting a reissue is prescribed; it may be done any time during the lifetime of the patent.

Wilson v. *Rousseau*, 45 U. S. 4 How. 646 (11:1141); *Gibson* v. *Harris*, 1 Blatchf. 167; Curt. Patents, § 285.

The first claim of reissue No. 6990 is a limited combination.

Case v. *Brown*, 69 U. S. 2 Wall. 320 (17:817); *Howe* v. *Morton*, 1 Fish. Pat. Cas. 586; Curt. Patents, § 269; *Winans* v. *Schenectady & T.* v. *R. R. Co.* 2 Blatchf. 279; *McCormick* v. *Seymour*, Id. 240; *Seymour* v. *McCormick*, 60 U. S. 19 How. 96 (15:557).

Mr. **George L. Roberts,** for appellees:

The commissioner has no jurisdiction to grant a reissued patent for an invention substantially different from that embodied in the original patent.

Parker & Whipple Co. v. *Yale Clock Co.* 123

U. S. 87, 98, 99 (31: 100, 105); *Giant Powder Co.* v. *California Powder Works*, 98 U. S. 126, 137-139 (25:77, 81, 82); *Ball* v. *Langles*, 102 U. S. 128, 130, 132 (26:104-106); *Swaine Turbine & Mfg. Co* v. *Ladd*, Id. 408, 413, 414 (26:184, 186); *Hopkins & D. Mfg. Co.* v. *Corbin*, 103 U. S. 786, 791, 792 (26:610-612); *James* v. *Campbell*, 104 U. S. 356, 370, 378 (26:786, 791, 794); *Heald* v. *Rice*, Id. 737, 753 (26:910, 916); *Johnson* v. *Flushing & N. S. R. R. Co.* 105 U. S. 539, 547 (26:1162, 1165); *Gosling* v. *Roberts*, 106 U. S. 39, 47 (27: 61, 64); *Wing* v. *Anthony*, Id. 142, 147 (27: 110, 112); *Moffitt* v. *Rogers*, Id. 423, 428 (27:76, 77); *Hoffheins* v. *Russell*, 107 U. S. 132, 141 (27: 332, 335); *McMurray* v. *Mallory*, 111 U. S. 97, 103 (28:365, 366); *Torrent & Arms Lumber Co.* v. *Rodgers*, 112 U. S. 659, 667-669 (28:842, 845, 846); *Coon* v. *Wilson*, 113 U. S. 268, 277, 278 (28:963, 965, 966); *Eachus* v. *Broomall*, 115 U. S. 429, 438 (29:419, 423); *Ives* v. *Sargent*, 119 U. S. 652, 662, 663 (30:544, 548).

The law of the original structure must control; and no afterthought can convert the thing into what it was not normally designed to be.

Clough v. *Barker*, 106 U. S. 166, 175, 176 (27: 134, 137); *American Bell Tel. Co.* v. *Dolbear*, 17 Fed. Rep. 604, 605.

The testimony of a single witness cannot warrant a court of equity in finding for the complainant against the denial of defendant's answer.

Tobey v. *Leonard*, 2 Cliff. 40, 50, 51; *Andrews* v. *Hyde*, 3 Cliff. 516, 522; *Carpenter* v. *Providence Wash. Ins. Co.* 45 U. S. 4 How. 185, 218 (11: 931, 946); *Grant* v. *Grant*, 34 Beav. 623, 627.

He who has rights and sleeps upon them justly loses them.

Miller v. *Bridgeport Brass Co.* 104 U. S. 350, 352, 355 (26:783-785).

The procurement of such reissue at so late a date, and after years of adverse practice, by others, was unjust, unlawful and fraudulent.

Matthews v. *Boston Machine Co.* 105 U. S. 54, 58 (26:1022, 1023); *Bantz* v. *Frantz*, 105 U. S. 160, 165, 166 (26:1013, 1014); *Gage* v. *Herring*, 107 U. S. 640, 645 (27: 601, 603); *Clements* v. *Odorless Excavating Apparatus Co.* 109 U. S. 641, 649, 650 (27: 1060, 1063); *Turner & S. Mfg. Co.* v. *Dover Stamping Co.* 111 U. S. 319, 326, 327 (28:442, 444); *Wollensak* v. *Reiher*, 115 U. S. 96, 100, 101 (29:350, 351); *White* v. *Dunbar*, 119 U. S. 47, 52 (30:303, 305); *Newton* v. *Furst & B. Mfg. Co.* Id. 373, 384, 385 (30: 442, 445); *Matthews* v. *Ironclad Mfg. Co.* 124 U. S. 347, 351 (31: 477, 479.)

The rule *falsus in uno, falsus in omnibus* should be applied.

The Santissima Trinidad, 20 U. S. 7 Wheat. 283, 339 (5: 454, 468); *Union Sugar Refinery* v. *Matthiesson*, 3 Cliff. 639, 654.

The conduct of Thomas R. Bailey, Jr., must negative any attempt, at this distance of time, to establish a claim to such invention.

Atlantic Works v. *Brady*, 107 U. S. 192, 203 (27: 438, 442).

There is nothing in regard to which a witness is more likely to be mistaken than in fixing the date at which a transaction long past took place.

Willett v. *Fister*, 85 U. S. 18 Wall. 91, 97 (21: 804, 805); *Wing* v. *Richardson*, 2 Cliff. 449, 453; *Hawes* v. *Antisdel*, 2 Ban. & Ard. 10, 22; *Sinclair* v. *Backus*, 5 Ban. & Ard. 81, 83, 84.

Whenever a party desires to show that his invention was prior to his application for the patent, he must prove the fact by other sufficient evidence.

Wing v. *Richardson*, 2 Cliff. 449, 450; *Dana* v. *Chicago Mfg. Co.* 6 Fish. Pat. Cas. 130, 133; *Howard* v. *Christy*, 2 Ban. & Ard. 457, 458.

The application must fully disclose the invention.

Chicago & N. W. R. Co. v. *Sayles*, 97 U. S. 554, 563, 564 (24:1053, 1057); *Eagleton Mfg. Co.* v. *West, B. & C. Mfg. Co.* 18 Blatchf. 218, 220, 222.

Usually the claim contains the words "as described" or "substantially as described," or words of like import, which are understood as referring back to the specification. Words of such import, if not expressed in the claim, must be implied.

Mitchell v. *Tilghman*, 86 U. S. 19 Wall. 287, 391 (22:125, 135).

Mr. Justice **Blatchford** delivered the opinion of the court:

This is a suit in equity, brought in the Circuit Court of the United States for the Eastern District of Michigan, by James Flower, Thomas Flower, and George Flower, against the City of Detroit, the Fire Commission of the City of Detroit, Benjamin Vernon, president thereof, and the Board of Water Commissioners of the City of Detroit, for the infringement of reissued letters patent No. 6990, granted March 14, 1876, on an application filed February 17, 1876, to Thomas R. Bailey, Jr., for an "improvement in hydrants," the original patent, No. 75,844, having been granted to said Bailey, March 10, 1868. Among the defenses set up in the answer, it was alleged that new matter, not constituting any substantial part of the alleged invention upon which the original patent was granted, was introduced into the specification of the reissue, and that the reissue is not for the same invention as the original patent, and is void. [564]

The specifications and claims of the original and of the reissue are here placed side by side in parallel columns, the parts in each which are not found in the other being in italic.

Original.	*Reissue.*
"To all whom it may concern:	"To all whom it may concern:
Be it known that I, T. R. Bailey, Jr., of Lockport, in the County of Niagara, and State of New York, have invented a new and improved hydrant fire plug; and I do hereby declare *that* the following *is* a full, clear and exact description thereof, which will enable *those* skilled in the art to make and use the same, reference being had to the accompanying *drawings, forming* part of this specification.	Be it known that I, T. R. Bailey, Jr., of Lockport, in the County of Niagara, and State of New York, have invented a new and improved hydrant fire plug; and I do hereby declare the following *to be* a full, clear and exact description thereof, which will enable *others* skilled in the art *to which my invention relates* to make and use the same, reference being had to the accompanying *drawing, which forms a* part of this specification.
This invention relates to *a new and improved method of constructing* fire plugs or hydrants; *and the invention consists in operating a cylinder valve in a suitable case, and in the arrangement and combination of parts*	This invention relates to *improvements in the construction of* fire plugs or hydrants.

[565]

connected therewith, as hereinafter described.

Figure 1 represents a longitudinal central section of *the* hydrant, *showing the parts of which it is composed and the manner of their arrangement.* Fig. 2 *is* a cross section of *Fig. 1* through *the line x x.*

Similar letters of reference indicate corresponding parts.

A represents the hydrant tube, from which *the* water is discharged. B is the horizontal section which is connected with the 'water main,' and which *forms* the valve chamber.

C is a loose casing around the hydrant tube, *for protecting the tube from dirt, etc.* D is the cylinder valve, *which has* its seat at its lower end, *on* elastic *or leather* packing, secured in a groove, as *seen in the drawing* at *a.* E is a rod, having a screw thread on its upper end, by which the valve
[566] is operated. F is a sleeve nut, *which engages* with the screw on the rod, *raising* and lowering *it* as the nut is turned. This nut is turned by a wrench on the head G.

The sleeve nut is *secured* in the cap of the hydrant by a collar, and packing under the hollow cylinder stuffing box H, *as seen in the drawing.* J is a yoke, which is attached to the rod E by a set screw, and *which* is *secured* in the tube A, and prevented from turning, as it moves up and down, by projecting lugs, as *seen in* Fig. 2; *and* it will be *seen* that the arrangement is such that the rod and valve may be raised and lowered without being rotated. *This secures* a uniform and perfect bearing of the valve on its seat, the packing *a* remaining undisturbed.

Provision is made for the discharge of the waste water by an orifice beneath the valve D, *marked f*, which orifice is opened and closed by a valve *marked g, as seen in the drawing. h is* a wing *on* the top of this valve.

As the cylinder valve D descends the angular flange *i* on its inside *strikes* the wing *h and* raises the valve, as *seen*
[567] in the drawing, *thus allowing* any water which may remain in the hydrant to escape through the orifice *f* and aperture *k. It will be thus seen that no water will be left in the hydrant to freeze in cold weather.*

The tube A is secured to the horizontal section B by a ring nut *m*, which

In the drawing, Figure 1 represents a longitudinal central section of a hydrant *according to my invention;*

Fig. 2, a cross section of *the same* through *lines x x of Fig. 1.*

My invention consists in the following parts and combinations, as hereinafter specified and claimed, wherein

A represents the hydrant tube, from which water is discharged. B is the horizontal section which is connected with the water main, and which *may form* the valve chamber.

C is a loose *movable* casing around the hydrant tube, D is the cylinder valve, *having* its seat at its lower end, *upon suitable* elastic packing, secured in a groove, as *shown* at *a.* E is a rod, having a screw thread on its upper end, by which the valve is operated. F is a sleeve nut *engaged* with the screw *nut* on the rod *E, lifting* and lowering *said rod* as the nut is turned *one way or another.* This nut is turned by a wrench *or crank, or other suitable device* on the head G.

The sleeve nut is *screwed* in the cap of the hydrant by a collar, and packing under the hollow cylinder stuffing box H. J is a yoke, which is attached to the rod E by a set screw, *or its equivalent*, and *it* is *screwed* in the tube A, and prevented from turning, as it moves up and down, by projecting lugs, as *shown in detail at* Fig. 2. It will be *noticed* that the arrangement is such that the rod and valve may be raised and lowered without being rotated, *thus securing* a uniform and perfect bearing of the valve on its seat, the packing *a* remaining undisturbed.

Provision is made for the discharge of the waste water by an orifice *f*, beneath the valve D, which orifice is opened and closed by a valve *g.* A wing *h is provided upon* the top of this valve.

As the cylinder valve D descends, the angular flange *i* on its inside, *striking* the wing *h*, raises the valve, as *shown* in the drawing, *and allows* any water which may remain in the hydrant to escape *down* through the orifice *f* and aperture *K, thus preventing any retention of water above the freezing level.*

The tube *A'* is secured to the horizontal section B by a ring nut, *m*, which

contains recesses for packing rings around the valve, as *seen* at *n n.* Packing *around* the valve is secured by another ring nut *o*, and also under the end of the tube A, as *seen* in the *drawing.*

P represents the discharge pipe, with a screw for the attachment of the hose, and a cap piece for covering the pipe when the hydrant is not in use.

Having thus described my invention, I claim *as new and desire to secure by letters patent:*

1. A hydrant or *water* plug, *constructed substantially as shown and described,—that is to say, with the parts* A and B *connected together, as shown,*

contains recesses for packing rings around the valve, as *shown* at *n.* Packing *about* the valve is *also* secured by another ring nut *o*, and also under the end of the tube A, as *shown* in the *drawings.*

P represents the discharge pipe, with a screw for the attachment of the hose, and a cap piece for covering the pipe when the hydrant is not in use.

It will be observed that the casing C loosely rests upon the main B, or upon a branch projecting upward from the same. This casing extends upward, enveloping the main portion of the water pipe A, at least that portion which is subterranean. Said casing extends upwards and fits loosely about the plug or hydrant at the portion A'. Above the upper terminus of the casing C is provided the bead a upon the hydrant [568]
proper. Sufficient space is left between the bead a and the upper terminus of the casing C to permit of sufficient up-and-down play of the said casing C, for the purpose which will hereafter more fully appear. This distance between the bead and casing may be adjusted to any desired distance, thus lengthening or shortening it, by means of its screw attachment at its base.

The main function of the casing C is to prevent derangement of parts during cold weather by the ground alternately freezing and thawing around the hydrant or plug. This process of freezing causes the surrounding earth, by its expansion, to lift or upheave, and thus be liable to derange the hydrant or plug. This upheaval or movement is received by the casing C, which, by its capability of sliding loosely up and down, will accommodate the upheaval of the earth above mentioned, without any liability to derange the plug or hydrant. This is the chief function of the casing C, although it likewise serves the purpose of protection to the water pipe A.

What I claim *is:*

1. *In combination* [569]
with a hydrant or fire plug, a detached and surrounding casing C, said casing adapted to have an independent up-and-down motion sufficient to receive the entire movement imparted by the upheaval of the surrounding earth by freezing, without derangement or disturbance of

and with a cylinder valve and *a* waste *water* valve connected and operated *in combination* substantially as herein *specified.*

2. *The arrangement of the parts* A, B, valve D, *case* C, and stuffing box H, as *herein described,* for the purpose *specified.*"

the hydrant or plug proper, substantially as shown.

2. *In combination with* a hydrant or *fire* plug *pipe* A, *the supply pipe* B, *and* cylinder valve and waste valve, connected and operated substantially as herein *shown and described.*

3. *The combination of the hydrant or fire plug pipe* A, *supply pipe* B, valve D, *casing* C, and stuffing box H, *substantially* as *and* for the purpose *shown.*"

The drawings of the original and of the reissue are also here placed side by side:

[570]

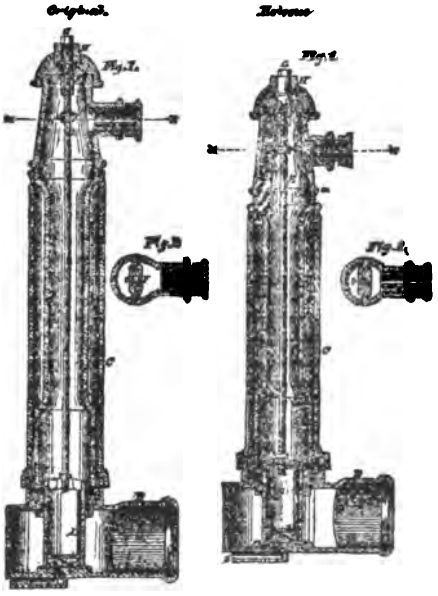

The material difference between the descriptive parts of the two specifications is that, in the reissue, it is stated that the casing C is movable, and that sufficient space is left between the bead *a*, upon the hydrant proper, and the upper terminus of the casing C, to permit of sufficient up-and-down play of the casing C to allow it to slide loosely up and down, to accommodate the upward and downward movement of the earth during the process of freezing and thawing, without any liability to derange the plug or hydrant. The casing could not thus slide loosely up and down, unless sufficient space were left between the bead *a* and the upper terminus of the casing. No suggestion of such arrangement is found in the specification of the original patent, and the drawing of that patent shows no space between the upper terminus of the casing and the bead or flange above it. This is new matter introduced into the specification of the reissue, contrary to the express inhibition of section 4916 of the Revised Statutes.

[571]

Claim 1 of the reissue is for an invention not indicated or suggested in the original patent; namely, the independent up-and-down motion of the casing. In addition to this, the drawing of the original patent shows a close contact between the top of the casing and the bead or flange above it, so as absolutely to forbid any such independent up-and-down motion of the casing as is covered by the first claim of the reissue, while the drawing, Figure 1, of the reissue, shows a sufficient space between the top of the casing and the bead or flange above it to admit of such independent up-and-down motion.

Issue having been joined, proofs were taken on both sides, and the circuit court entered a decree dismissing the bill, from which the plaintiffs have appealed. Its opinion accompanies the record, and is reported in 22 Fed. Rep. 292. It held that the reissued patent was invalid, as matter of law, upon a comparison of the original with the reissue. We concur in this view.

It is sought to sustain the validity of the reissue by attempting to show that the model filed in the Patent Office with the original application exhibited the invention covered by the first claim of the reissue. It is doubtful whether that fact is satisfactorily established. But, irrespective of this, the case falls directly within the recent decision of this court in *Parker & Whipple Co.* v. *Yale Clock Co.* 123 U. S. 87 [31: 100]. It was held in that case that what was suggested in the original specification, drawings, or patent office model is not to be considered as a part of the invention intended to have been covered by the original patent, unless it can be seen from a comparison of the two patents that the invention which the original patent was intended to cover embraced the things thus suggested or indicated in the original specification, drawings, or patent office model, and unless the original specification indicated that those things were embraced in the invention intended to have been secured by the original patent. See, also, *Hoskin* v. *Fisher*, 125 U. S. 217 [31: 759]. In the present case, it cannot be seen from a comparison of the two patents that the original specification indicated that what is covered by the first claim of the reissue was intended to have been secured by the original. [572]

In the present case, also, the reissue was not applied for until nearly eight years after the original patent was granted, and the reissue was taken with the manifest intention of covering, by an enlarged claim, structures which in the mean time had gone into extensive public use, and which were not covered by any claim of the original patent.

Infringement is alleged only of claims 1 and 3 of the reissue. As to the casing C of the third claim, it cannot, any more than the casing C of the first claim, be held to cover a casing which has the independent up-and-down motion referred to. Such casing must be construed to be the casing exhibited in the drawing annexed to the original patent, that is, one in which the up-and-down play is restricted by the overlapping bead or flange. On any other construction, claim 3 is an unlawful expansion, in regard to the casing, of what is found in the original patent. In addition to this, if the casing of claim 3 is only a casing which has no end play, it is anticipated by what is shown in letters patent No. 19,206, granted to Race and

Matthews, January 26, 1858, which patent was the subject of the decision of this court in *Matthews* v. *Boston Machine Co.* 105 U. S. 54 [26:1022].

The decree of the Circuit Court is affirmed.

---

[489] ISAAC TAYLOR ET AL., *Appts.*,
v.
MOSES L. HOLMES ET AL.

(See S. C. Reporter's ed. 489-494.)

Suit by corporation in names of stockholders—when not sustainable—Statute of Limitations—laches in Courts of Chancery.

1. A suit in behalf of a corporation, to recover its property, cannot be brought in the name of two stockholders, instead of by the corporation itself in its own name, unless sufficient reason for bringing the suit by the stockholders is shown.

2. It is not sufficient reason for bringing such suit by the stockholders, that the corporation is extinct by limitation in its charter, where, by the law of its State, its existence was continued, after such period of limitation, for the purpose of winding up its business and collecting and distributing its assets.

3. It is not sufficient reason for bringing such suit in the names of stockholders, that many of the directors of the company are dead, where part of them have survived, and no application has been made to the surviving directors to bring the suit, and no effort has been made to call the stockholders together to elect directors, or to obtain united action.

4. Where the suit was brought after the lapse of nearly thirty years, during a part of which time the corporation was in existence and operation, and it must have known all the facts stated, during all of which time the defendants held the property adversely, and no sufficient reason is given why relief was not sought earlier,—*Held*, that the suit was barred by the Statute of Limitations and by the general doctrine of laches applicable in courts of chancery.

[No. 209.]

Argued April 5, 6, 1888. Decided May 14, 1888.

APPEAL from a decree of the Circuit Court of the United States for the Western District of North Carolina, dismissing a bill in Chancery brought by two stockholders of the Gold Hill Mining Company, for themselves and such other stockholders as might desire to unite with them, to correct a mistake in a deed to the corporation, and to recover its property. *Affirmed.*

Reported below, 14 Fed. Rep. 498.

The facts are stated in the opinion.

Mr. **Clarence R. Conger**, for appellants:

Lapse of time will not of itself bar recovery in equity, but the court will, in each case, consider the particular circumstances.

Allore v. *Jewell*, 94 U. S. 506 (24:260); *Young* v *The Key City*, 81 U. S. 14 Wall. 653 (20:896); *Connecticut Gen. L. Ins. Co.* v. *Eldredge*, 102 U. S. 545 (26:245); *Gunton* v. *Carroll*, 101 U. S. 426 (25:985).

The Statute of Limitations cannot properly be pleaded on demurrer.

Burnley v. *Jeffersonville*, 3 McLean, 336.

But the objection that the action was not commenced within the time limited can only be taken by answer.

Code, Civ. Proc. North Carolina, § 138.

Where, as in this case, it is shown that the officers of a corporation are inactive, equity will listen to the prayer of the stockholder, and, where the term of corporation has expired, will treat the corporate property as a trust fund to be distributed under the eye of the court.

Wood v. *Dummer*, 3 Mason, 308; *Nevitt* v. *Bank of Port Gibson*, 6 Smedes & M. 513.

Mr. **Samuel F. Phillips**, for appellees.

Mr. Justice **Miller** delivered the opinion of the court: [490]

This is an appeal from the Circuit Court of the United States for the Western District of North Carolina.

A bill in chancery was brought in that court by Isaac Taylor, a citizen of the State of Massachusetts, and Sallie A. Howes, a citizen of the State of New Jersey, as they declare, "for themselves individually, each as a holder and owner of shares of the capital stock of the Gold Hill Mining Company, as well as for and in behalf of all other stockholders of the said company who may desire hereafter to unite with them," against Moses L. Holmes, Reuben J. Holmes, Ephraim Manney and Valentine Manney, all citizens of the State of North Carolina. To this there was a demurrer, which was sustained, and a decree rendered dismissing the bill.

The Gold Hill Mining Company, according to the bill, was duly incorporated under the laws of the State of New York, August 30, 1853; its capital stock fixed at $1,000,000 and its shares at the par value of $5 each. Its term of existence was to be twenty-five years. It also appears from the bill that shortly after its organization, to wit, September 1, 1853, this corporation bought of Moses L. Holmes, one of the defendants, the Gold Hill mines and mining property, consisting of twelve lots and tracts of land lying in the Counties of Rowan and Cabarrus, in the State of North Carolina; that the company expended large sums of money in the pursuit of mining and in making improvements upon the lands of which it had possession, and that $20,000 or thereabouts was raised by assessments upon its stock. It would appear that this was the condition of affairs [491] before the outbreak of the war in 1860, when the enterprise seemed to be a failure and practical mining was abandoned. The bill also set up a foreclosure sale under a mortgage at which the property was purchased in by Moses L. Holmes and Reuben J. Holmes, who have had undisturbed possession thereof ever since.

It is also alleged in the bill that about July, 1861, the officers of the corporation, which had been in possession of the property, were driven off by the defendants, and that thereafter, by the death and resignation of its officers and directors or the greater part thereof, it became utterly disorganized and never held any meetings of its directors or stockholders since the year 1862, so that at the time of the filing of the bill there was but one director of the corporation living and surviving, within the knowledge of complainants; and it is alleged that he, by his acts and doings and connections with the defendants, in and touching pretended claim or claims adversely to the interest of said corporation and its stockholders and creditors, has rendered himself incompetent to assert and protect the rights of said corporation and of complainants, and has refused and neglected and

still refuses and neglects so to assert and protect the same.

One of the objects of the bill is to correct an alleged mistake in the original conveyance made by Moses L. Holmes, of the lands on which the mining operations were conducted, to this corporation; the allegation being that it was intended to convey to it a perfect title in fee simple, whereas, wanting the words of limitation to heirs or assigns, and other defects, it did not convey such a title. These matters are set forth with much particularity and at great extent in the bill of the complainant, but as the decision of the court does not turn upon them, nor upon another question which has been raised, connected therewith, as to whether or not one of the deeds was delivered as an escrow or absolutely, we need not here consider them further.

The court below sustained the demurrer to the bill upon two principal grounds: First, that the suit was barred by the Statute of Limitations and by the general doctrine of laches as applicable in courts of chancery. Second, that [92] no sufficient reason is shown why the suit should be brought by two stockholders instead of by the corporation itself, in its own name. We think both of these grounds or either of them sufficient to sustain the position taken by the court below.

It is, however, alleged that the corporation itself is extinct by reason of the limitation placed upon its existence, under the articles of incorporation, by which it expired on the 30th day of August, 1878. But, under the laws of New York, the existence of such a corporation was continued after the period for which it was limited for the purpose of winding up its business, and for the purpose of collecting and distributing its assets and paying its debts. Although the allegation of the bill is that many of the directors of the company are dead, still it is shown that one of them survives, and no assertion is made that there was any application to this surviving director on the part of the defendants for the purpose of instituting any proceedings looking to the rectification of this deed or for the recovery of the real estate in North Caronlia; nor does it appear that there was any request made to him to bring any suit either at law or in chancery for that purpose. No effort was made to call together the stockholders to take any action on the part of the company, or to elect other directors, or to obtain any united action in the assertion of the claims now set up.

Although there is in the bill a declaration that the two complainants are owners of a majority of the stock of the Gold Hill Mining Company, there is no statement as to when or how they became such, or whether they were such stockholders during the times that injuries were inflicted, of which they now complain, in regard to the taking possession of the property by the defendants, or whether they became stockholders afterwards. In short, there is no such averment of their relation to the corporation or of their interest in the matter, about which they now seek relief, as brings this action within the principle of the decisions of this court upon the subject. *Hawes* v. *Oakland*, 104 U. S. 450 [26:827].

Under the Statute of Limitations of the State of North Carolina, or upon the general principles of courts of equity with regard to laches, [493] the complainants are barred of relief in the present case.

The mistake sought to be corrected, which is made the foundation of the present suit, occurred in 1853. This suit was brought in 1882, after the lapse of nearly thirty years, during all of which time the action might have been brought, so far as relates to the correction of the alleged mistake in the deed. During seven or eight years of this time the corporation was in full existence and operation; it had the means to prosecute this suit and had an opportunity of knowing, or at least its principal members must have known, all the facts which are now brought to the consideration of the court, and even up to the time when this suit was commenced there was a director surviving who had never been discharged or resigned. There was no reason, if stockholders were proper persons to bring this action, why proceedings should not have been begun by them upon the practical dissolution of the company in 1862, after which time, as the complainants allege, no corporate organization was kept up, no work or business done, and no attempt made by any of the directors to act upon any of the rights of the corporation or to exercise their authority in the conduct of its affairs. If we allow some deduction for the period of the war, which closed in 1865, there still remains the long delay between that time and the bringing of this suit in 1882, a period of about seventeen years. This lapse of time requires some better account in regard to the reasons why this suit was not earlier instituted than is given in the present bill. It is obvious that during all this time, and, indeed, from the year 1861, when, as the bill declares, the defendants took possession of the property, it has been held by them adversely to the claim of the Gold Hill Mining Company, and to the claim of the complainants. No sufficient reason is given why relief was not sought earlier. During all this period the shares of the corporation seem to have been of no value, so that the defendants may have bought them in the market for a very inconsiderable sum and may now be prosecuting a suit for relief which, if sustainable at all, ought to inure to the benefit of other parties. *Clarke* v. *Boorman*, 85 U. S. 18 Wall. 493 [21:904].

These questions have been too frequently dis- [494] cussed in this court to need further comment. We concur with the Circuit Court that the bill is without merit, and believe that it was rightfully dismissed. *The decree is therefore affirmed.*

CHICAGO, MILWAUKEE AND ST. PAUL RAILWAY COMPANY. *Appt.*, [406]
v.
UNITED STATES.

(See S. C. Reporter's ed. 406-409.)

Section 3962, Rev. Stat.—two Acts on same subject—repugnancy—implied repeal.

1. Section 3962, Revised Statutes, authorizing the Postmaster-General to make deductions from the pay of contractors, for failures to perform service according to contract, applies to all contractors,

and is not repealed by section 5 of the Act of 1879, in regard to railroad companies.

2. When there are two Acts or provisions of law relating to the same subject, effect is to be given to both if that be practicable.

3. If the two Acts are repugnant, the latter will operate as a repeal of the former to the extent of the repugnancy only, but the second Act will not operate as such repeal merely because it may repeat some of the provisions of the first one, and omit others, or add new provisions.

4. In such cases the later Act will operate as a repeal only where it plainly appears that it was intended as a substitute for the first Act.

[No. 238.]

Argued April 19, 1888. Decided May 14, 1888.

APPEAL from a judgment of the Court of Claims, dismissing the petition of the appellant, for moneys claimed to be unlawfully withheld from it. *Affirmed.*

Reported below in 14 Ct. Cl. 125.

Statement by *Mr. Justice* **Field:**

The petitioner, the Chicago, Milwaukee and St. Paul Railway Company, is a corporation formed under the laws of Wisconsin, and owns and operates several lines of railway in that State, and in the States of Illinois, Iowa and Minnesota, and in the Territory of Dakota. In 1879 it entered into sundry contracts with the Postoffice Department to transport the mails of the United States over its lines, on specially designated routes, at rates fixed under the Acts of Congress of March 3, 1873, June 12, 1876, and June 17, 1878. The petitioner alleges that it transported the mails upon all the routes designated in accordance with the contracts, except when prevented by the elements or other unavoidable disasters; that between the autumn of 1880 and the spring of 1883, owing to snow blockades, floods, and other unavoidable causes, which it was impossible for the petitioner to provide against, it was prevented at various times from running its trains of cars over the routes, and consequently the mails were delayed and accumulated until the cars could be got through; but the petitioner did finally carry all the mails over the routes, and as frequently as it was possible; that the Postoffice Department deducted from the pay of the petitioner at divers times, during the period mentioned, a large sum of money, claiming a right to do so because of the failure of the petitioner to transport the mails upon the ordinary schedule time for the departure and arrival of the mails, notwithstanding the failures were owing to no want of diligence or care in the petitioner, but were owing wholly to the causes mentioned; and that such reductions amounted to $31,251.86, which sum the petitioner alleges is unjustly and unlawfully held from it, and therefore asks judgment for the amount. A demurrer to this petition, that it did not allege facts sufficient to constitute a cause of action, was interposed by the United States and sustained by the court. Judgment was accordingly entered dismissing the petition, and the petitioner appealed to this court.

[407]

Mr. **J. F. Farnsworth,** for appellant:

A statute imposing a penalty for the commission of an offense is repealed by a subsequent statute imposing a less penalty for the commission of a higher grade of the same offense.

Smith v. *State*, 1 Stew. (Ala.) 506.

A subsequent statute, inconsistent with and repugnant to the provisions of a prior one, operates as a virtual repeal of the old one.

U. S. v. *Irwin*, 5 McLean, 178.

In case of two statutes relating to the same subject, and not in terms repugnant or inconsistent, if the later statute is clearly intended to prescribe the only rule which should govern in the case, this will be construed as repealing the original Act.

Sacramento v. *Bird*, 15 Cal. 294; *Bartlet* v. *King*, 12 Mass. 537; *Commonwealth* v. *Cooley*, 10 Pick. 37; *Norris* v. *Crocker*, 54 U. S. 13 How. 429 (14:210); *Daviess* v. *Fairbairn*, 44 U. S. 3 How. 636 (11:760); *State* v. *Whitworth*, 8 Port. (Ala.) 434; *Sullivan* v. *People*, 15 Ill. 233; *Nichols* v. *Squire*, 5 Pick. 168; *Commonwealth* v. *Kimball*, 21 Pick. 373; Sedgw. Stat. L. 126; *Parsons* v. *Hardy*, 14 Wend. 215.

Messrs. A. H. Garland, Atty-Gen., and **Robert A. Howard,** *Asst. Atty-Gen.,* for appellee:

Implied repeals are not favored.

Wood v. *U. S.* 41 U. S. 16 Pet. 342 (10:987); *Daviess* v. *Fairbairn*, 44 U. S. 3 How. 636 (11:760); *U. S.* v. *Tynen*, 78 U. S. 11 Wall. 88 (20:153); *State* v. *Stoll*, 84 U. S. 17 Wall. 425 (21:650).

Mr. Justice **Field** delivered the opinion of the court:

The deductions from the compensation claimed by the Railway Company for its failure to make the trips required, that is, to render the service stipulated, of which it complains, were made by the Postmaster-General under section 3962 of the Revised Statutes, which is as follows:

"The Postmaster-General may make deductions from the pay of contractors, for failures to perform service according to contract, and impose fines upon them for other delinquencies. He may deduct the price of the trip in all cases where the trip is not performed; and not exceeding three times the price if the failure be occasioned by the fault of the contractor or carrier." This section in terms applies to all contractors, and, standing alone, there would not be any serious contention against the authority of the Postmaster-General to make the deductions complained of. It is not pretended that the amounts exceeded those mentioned in the section. It is, however, insisted that the section, so far as applicable to railroad companies, was repealed by section 5 of the Act of March 3, 1879, making appropriations for the service of the Postoffice Department for the fiscal year ending June 30, 1880, which provides:

[408]

"That the Postmaster-General shall deduct from the pay of the railroad companies, for every failure to deliver a mail within its schedule time, not less than one half the price of the trip, and where the trip is not performed, not less than the price of one trip, and not exceeding, in either case, the price of three trips: *Provided, however,* That if the failure is caused by a connecting road, then only the connecting road shall be fined. And where such failure is caused by unavoidable casualty, the Postmaster-General, in his discretion, may remit the fine. And he may make deductions and impose fines for other delinquencies." 20 Stat. at L. chap. 180, p. 358.

This latter section was repealed on the 11th of June, 1880, 21 Stat. at L. chap. 206, p. 178; and section 12 of the Revised Statutes provides that the repeal of a repealing statute shall not revive the original Act. It is, therefore, contended that there was no statute in force which authorized the deductions at the time they were made between the autumn of 1880 and the spring of 1883, during which period the alleged failures in the mail transportation occurred.

There is a brief and conclusive answer to this contention. Section 3962 of the Revised Statutes is not repealed by section 5 of the Act of 1879. Section 3962 authorizes a deduction from the pay of contractors, whether they be natural persons or corporations, the price of the trip in all cases where the trip is not performed, and not exceeding three times the price if the failure be caused by the fault of the contractor or carrier. Section 5 of the Act of 1879 applies only to railroad companies, and has special reference to failures of delivery within schedule time, and makes a difference between them and failures to make the trips, leaving the provision for the latter substantially
09] as it is in the Revised Statutes. When there are two Acts or provisions of law relating to the same subject, effect is to be given to both, if that be practicable. If the two are repugnant, the latter will operate as a repeal of the former to the extent of the repugnancy. But the second Act will not operate as such repeal merely because it may repeat some of the provisions of the first one, and omit others, or add new provisions. In such cases the later Act will operate as a repeal only where it plainly appears that it was intended as a substitute for the first Act. As *Mr. Justice* Story says, it "may be merely affirmative, or cumulative, or auxiliary." *Wood* v. *U. S.* 41 U. S. 16 Pet. 363 [10:995].

The most that can be said of section 5 of the Act of 1879, construed with reference to section 3962 of the Revised Statutes, is that it makes an exception to the provisions of that section, so far as railway companies are concerned. Its repeal, therefore, leaves the original section in full force. The repeal was before the failures occurred for which the deductions complained of were made.

Judgment affirmed.

354] MOSLER SAFE AND LOCK COMPANY,
Appt.,
v.
MOSLER, BAHMANN AND COMPANY.

(See S. C. Reporter's ed. 354-363.)

Letters patent—claim for process—second patent—invalid claims—aggregation.

1. In an action for the infringement of three letters patent granted to Moses Mosler, No. 273,585, March 6, 1883, for an improvement in fireproof safes, No. 281,640 for an improvement in fireproof safes, and No. 283,136 for an improvement in bending angle irons,—*Held*, that the claim for the process in No. 283,136 is merely for the process or method involved in making the article covered by claims 1 and 2 of No. 281,640, which method is a purely mechanical one.

2. There was no patentable invention in No. 283-136 when it was applied for, in view of what was applied for by claims 1 and 2 of No. 281,640.

3. After a patent is granted for an article described as made by causing it to pass through a certain method of operation to produce it, the inventor cannot afterwards, on an independent application, secure a patent for the method to produce the identical article covered by the previous patent.

4. *Held* further, that claims 1 and 2 of No. 281,640, and the claim of No. 283,136, are invalid.

5. *Held* further, in regard to claim of No. 273,585 and claim 3 of No. 281,640, which are claims to combinations, that the combination in each was nothing more than an aggregation, and that such an aggregation was not patentable.

6. There was no exercise of the inventive faculty in using a pattern of flexible material, in an old and familiar method, to determine the lines of the cuts and the shape of the opening, shown in the exhibits; and the change from square cornered safes was only a change in form.

[No. 248.]

Argued April 24, 25, 1888. Decided May 14, 1888.

APPEAL from a decree of the Circuit Court of the United States for the Southern District of Ohio, dismissing a suit brought for the infringement of letters patent. *Affirmed.*

Opinion below in 22 Fed. Rep. 901.

The facts are stated in the opinion.

Mr. **George J. Murray,** for appellant:

If one with a knowledge of the state of the art surreptitiously attempts to appropriate to himself what he knows does not belong to him, he should be estopped against a person whom the Patent Office has decided,—as against his claim,—to be the original and first inventor.

Greenwood v. *Bracher*, 1 Fed. Rep. 856; *Peck, S. & W. Co.* v. *Lindsay*, 2 Fed. Rep. 688; *Hanford* v. *Westcott*, 16 Off. Gaz. 1181; *Holliday* v. *Pickhardt*, 12 Fed. Rep. 147; *S. C.* 22 Off. Gaz. 420; *U. S. & Foreign Salamander Felting Co.* v. *Asbestos Felting Co.* 18 Blatchf. 312; *Shuter* v. *Davis*, 16 Fed. Rep. 564; *Russell* v. *Place*, 94 U. S. 606 (24:214).

The decision of the officers of the Patent Office should not be reversed except upon most satisfactory proofs.

McComb v. *Ernest*, 1 Woods, 195; *Crouch* v. *Speer*, 6 Off. Gaz. 187.

The records of the interference case are competent to prove the validity and value of the inventions sued upon.

Smith v. *Goodyear Dental Vulcanite Co.* 93 U. S. 486 (23:952); *Hicks* v. *Otto*, 19 Fed. Rep. 749; *Shuter* v. *Davis, supra; U. S. Stamping Co.* v. *King*, 17 Blatchf. 55; *Hoe* v. *Cottrell*, Id. 546; *Holliday* v. *Pickhardt*, 12 Fed. Rep. 147; *Consolidated Safety Valve Co.* v. *Crosby Steam Gage & Valve Co.* 113 U. S. 157 (28:939); *Webster Loom Co* v. *Higgins*, 105 U. S. 580 (26:1177).

The burden of proof of want of novelty rests upon him who avers it, and every reasonable doubt should be resolved against him.

Seymour v. *Osborne*, 78 U. S. 11 Wall. 516 (20:33); Walker, Patents, § 76 and cases cited; *Bates* v. *Coe*, 98 U. S. 31 (25:68); *Imhaeuser* v. *Buerk*, 101 U. S. 647 (25:945).

Mr. **James Moore,** for appellees:

Merely bringing old devices into juxtaposition, and there allowing each to work out its own effect without the production of something novel, is not invention.

Hailes v. *Van Wormer*, 87 U. S. 20 Wall. 368 (22:248); *Pickering* v. *McCullough*, 104 U.

S. 318 (26:751); *Reckendorfer* v. *Faber*, 92 U. S. 347 (23:719); *Heald* v. *Rice*, 104 U. S. 737 (26:910); *Hailes* v. *Albany Stove Co.* 123 U. S. 586 (31:285).

[355] *Mr. Justice* **Blatchford** delivered the opinion of the court:

This is a suit in equity, brought in the Circuit Court of the United States for the Southern District of Ohio, by the Mosler Safe and Lock Company, an Ohio corporation, against [356] Mosler, Bahmann and Company, another Ohio corporation, for the infringement of three letters patent of the United States, each of them granted to Moses Mosler, namely, No. 273,585, March 6, 1883, for an improvement in fireproof safes, on an application filed February 5, 1883; No. 281,640, July 17, 1883, for an improvement in fireproof safes, on an application filed December 27, 1881; and No. 283,136, August 14, 1883, for an improvement in bending angle irons, on an application filed December 11, 1882.

The answer denies that any one of the three patents shows any invention, and also denies that Mosler was the first and original inventor, or an inventor at all, of the alleged inventions which the patents purport to secure, or of any of them, and also denies that any one of the inventions has any utility. It also denies infringement, and sets up various references on the question of novelty, in regard to all three of the patents.

A replication was put in, and proofs were taken by both parties, and, on a hearing, the court dismissed the bill on the merits, its opinion, which accompanies the record, being reported in 22 Fed. Rep. 901. That opinion sets forth sufficiently the nature of the inventions covered by the three patents, and the contents of the specifications and claims, and we adopt its statement, as follows:

"1. No. 273,585; application filed February 5, 1883; letters dated March 6, 1883. The object of this invention, as stated in the specification, is to provide an improved means of constructing the outer casing, so that the safe may be filled from the bottom. The front and back frames of the safe are formed from angle bars, which have one side cut away, where the bends of the corners are to be made, and the uncut side bent around to close the joint in the corner, and form a frame with its outer corners rounded. The meeting joint at the bottom of the frame is overlapped by a short angle piece, which is screwed or riveted to the frame, uniting the joint. A sheet metal cover is bent around the top sides and around the lower rounded corners of the frames. Upon each edge of this cover, at the bottom of the safe and between the angle frames, are secured metal bars, which project beyond the edges of the [357] cover to form rests for the bottom plate. The safe is made with the customary sheet metal box forming the interior receptacle and secured to the cast metal door frame in the usual manner. The top of the caster frame conforms to the curve of the rounded corners, and, after the bottom plate is pushed into its place, the inner bolts which secure the caster frames pass through the bottom plate which they secure and the angle frames. The patentee does not claim the bent angle frames nor the safe composed of these frames and the sheet metal cover bent around them (the same being shown and claimed by him in an application then pending), but limits his claim to the combination, in a fireproof safe, of the frames, the sheet metal cover, bent around the top sides, and lower corners, with projecting metal bars, and removable bottom plate, substantially as described.

"2. No. 281,640. This patent differs from No. 273,585 in that a particular description is given, in the specification, of the cuts in the side of the angle bar, where the bends are to be made; but the patentee specifies that the shape of the cut may be varied, it only being essential that sufficient metal be cut away on one side of the angle bar to permit the other or uncut side to be bent, the cut nearest the uncut side being in the form of a curve or curves, so that, when said uncut side is bent to form the corner, it will bear upon and be supported by the curved end or portion of the cut, and thus be rounded by a curve similar to the curve of the cut. The claims are as follows: '1. An angle bar for safe frames, consisting, substantially as before set forth, of a right-angled iron bar, one of the sides of which is cut away, leaving a curve facing the uncut side, whereby said uncut side may be bent to bear upon said curve to form a rounded corner. 2. An angle bar for safe frames, consisting, substantially as before set forth, of a right-angled iron bar, one of the sides of which is cut away, with curved cuts meeting a right-angled cut, whereby the uncut side may be bent to form rounded corners. 3. In a safe, the combination of the front and back frames, formed of single bent angle bars, having one side cut away to leave curved ends, upon which the uncut side is bent to form rounded corners, and a metal sheet, E, [358] bent around and secured to said frames to form the top and sides of the safe, substantially as described.'

"3. No. 283,136, dated August 14, 1883, application filed December 11, 1882. The claim is as follows: 'The herein described process of bending angle irons, which consists in cutting away a portion of one web by a cut which severs the two webs at their junction, for a distance equal to the arc of the corner to be bent, and removes sufficient of metal in front of the single part of the uncut web to permit the same to bend to the desired angle and to insure the edges of the opening meeting to form a close joint as the bar is bent, substantially as shown and described.' In the specification the sides of the angle bar are designated by the letters A and B. A represents the uncut web, and B the cut web. The outer opening of the cut, C, is made by lines at angles of forty-five degrees to the edge of the web, so that, when the bar is bent, the edges of this opening meet each other in a true miter. The inner opening, D, which extends outward within converging curved lines from the angle of the bar to where it meets the opening C, extending inward from the edge of B, and within converging lines (the letter X suggesting the shape of the entire opening, excepting that the outer opening extends nearly to the angle of the bar), has a dovetailed shape, bounded by curved lines described from points upon the miter line and the face of the uncut web A. The curved ends of the web

B abut against the uncut side when the bar is bent, making a close joint. The patentee states in the specification, that 'the shape of the opening or cutaway portions of web B may be varied at will, so long as the meeting line or lines be not extended beyond the space bounded by the rounded corner, and the edge lines extended to web A.' The angle bars cut out as described, it is stated in the specification, may be bent to the proper form by the machine represented by Fig. 6 in the accompanying drawings. 'In this, E represents a metal block having upwardly projecting sides screw tapped to receive clamping screw F. The opposite corners of the block are rounded to fit the inner [359] curve of the desired corner. G is a loose block of iron, between which and the side of block E the uncut web A is clamped by screw F, the other web, B, resting on the block, the cutaway part over the rounded corner; by force applied to the projecting end of the bar it is bent around until the severed edges meet in a close joint. The angle bar herein shown is not claimed here, as it is the subject of a pending application.'

"The safes described in these patents are filled through the bottom opening with fireproof cement. The bottom is then secured in place and the casters attached. The patentee states in the specification forming part of letters No. 281,640, that before his invention safes were filled from the back, and that his safe 'can be completely finished before the filling is put in. The filling adds greatly to the weight. Much labor in handling is therefore saved.'"

The opinion of the circuit court then proceeds to say: "For the purposes of this suit these three patents may be considered as one, containing all the claims involved. As counsel for complainant suggests, the claims are for separate and distinct but not for independent inventions, at least so far as the manufacture of safes is concerned. They might have been all included in one application had the patentee chosen to so present them.

"The first and second claims in letters patent No. 281,640 are for an angle bar for safe frames, consisting of a right-angled iron bar, one of the sides of which is cut away (the cuts being curved and meeting a right angled cut), leaving a curve facing the uncut side, whereby said uncut side may be bent to form a rounded corner. The patentee states, in the specification, that he is aware 'that it has been proposed to make protecting corner pieces for safes from angle iron, from one side of which a triangular piece was cut out to permit the opposite side to bend.' He also states that 'the shape of the cut to permit the angle bar to be bent to form rounded corners may be varied without departing from the principle of my invention,' etc.

"In the drawings accompanying the specification forming part of letters patent No. [360] 283,136, figure 5 represents a templet of cardboard or thin sheet metal, which the patentee states he uses to determine about the shape and size of the notch or cut which it is necessary to make to admit of the bar being bent to any desired angle and to make a corner of any desired curve. The templet is of the shape and size of a section of the angle bar. One web is severed by a cut at right angles to its edge; the two webs are then severed at their junction for some distance upon each side of the cut; then, by bending the web so that the cut edges will pass each other, the templet may be bent to any curve or angle desired, and the lines of the cuts required to make the proper shape of opening in angle bars to be bent to the same curve or angle, marked and fixed upon. Such use of the templet as a pattern is nothing new. It is clearly shown by the testimony, that cutting an opening in one web of an angle bar to permit the bending of the bar to an angle or curve was known and used before the date claimed by complainant's assignor for his invention. Different shapes of cuts and openings are shown in exhibits put in evidence by respondents. Unless the precise cuts and shape of opening shown in the drawing attached to the specification forming part of the letters patent are patentable, the claims are worthless. But the patentee shows how, by the use of a pattern of flexible material—an old method, and familiar as the use of the carpenter's miter box—he determines the lines of the cuts and the shape of the opening. In this there is no exercise of the inventive faculty; it is only what would occur to a mechanic of ordinary skill. Moreover, if the precise lines of cuts and shape of opening shown in the drawings were patentable, the patentee does not, as we have seen, so limit his claim, but seeks to cover variations, which he says may be made without departing from the principle of his invention. Claims 1 and 2 in letters patent No. 281,640, and the claim in letters patent No. 283,136, are therefore adjudged to be invalid.

"As to the combination claim, being the only claim in letters patent No. 273,585, and claim 3 in letters patent No. 281,640, they are old, excepting only—and this is not material—that the precise lines of cuts and the shape of the opening of the angle bar are not found in safes of [361] prior manufacture. The sheet metal cover is old. It is shown in respondent's exhibit, 'St. Louis Safe.' The bars C and lower removable plate D, claimed in No. 273,585, are old. See respondent's exhibit A and the deposition of John Hurst. The safes in the manufacture of which they were used were square cornered, as was then the fashion, but that is not material. When the angle frames were bent the corners were round, and then heated and hammered upon both sides of the corners, to make them square. Respondent's testimony also establishes that fireproof safes were filled from the bottom as early as 1879, by the Cincinnati Safe and Lock Company, and in that year, probably also in 1878, by Hall's Safe and Lock Company. The complainant was the first to employ the combination claimed in the manufacture of round cornered safes, but the change from square cornered safes was only a change in form. The combination is nothing more than an aggregation, and falls by the application of the rulings in *Hailes* v. *Van Wormer*, 87 U. S. 20 Wall. 353, 368 [22: 241, 248]; *Reckendorfer* v. *Faber*, 92 U. S. 347 [23: 719], and *Pickering* v. *McCullough*, 104 U. S. 310, 318 [26: 749, 751]. The bill is dismissed at complainant's costs."

It is apparent that the claim for the process, in No. 283,136, is merely for the process or method of cutting away and removing the metal, so as to permit of the bending, and of doing the bending, and of producing the close

joint as the bending takes place; such process or method being merely the process or method involved in making the article covered by claims 1 and 2 of No. 281,640. In other words claims 1 and 2 of No. 281,640 are each for an article produced by a described method or process, and the claim of No. 283,136 is for such method or process of producing such article. The method is a purely mechanical method. No. 281,640 was applied for more than eleven months before No. 283,136 was applied for, and was issued twenty-eight days before No. 283,136 was issued. There was no patentable invention in No. 283,136, when it was applied for, in view of what was applied for by claims 1 and 2 of No. 281,640. After a patent is granted for an article described as made by causing it to pass [362] through a certain method of operation to produce it, as, in this case, cutting away the metal in a certain manner and then bending what is left in a certain manner, the inventor cannot afterwards, on an independent application, secure a patent for the method or process of cutting away the metal and then bending it so as to produce the identical article covered by the previous patent, which article was described in that patent as produced by the method or process sought to be covered by taking out the second patent.

The circuit court, in its opinion, said that the use of the templet shown in Figure 5 of No. 283,136, as a pattern, was not new; that cutting an opening in one web of an angle bar, to permit the bending of the bar to an angle or curve, was known and used before the date of the patentee's invention; that different shapes of cuts and openings were shown in exhibits put in evidence by the defendant; that the claims in question, namely, claims 1 and 2 of No. 281,640, and the claim of No. 283,136, were invalid, unless the precise cuts and shape of opening shown in the drawings were patentable; that there was no exercise of the inventive faculty in using a pattern of flexible material, in an old and familiar method, to determine the lines of the cuts and the shape of the opening; and that the patentee had not limited his claims to the precise lines of cuts and shape of opening shown in the drawings, but had stated, in the specification of No. 281,640, that the shape of the cut to permit the angle bar to be bent to form rounded corners might be varied without departing from the principle of the invention. We concur in the view that claims 1 and 2 of No. 281,640 and the claim of No. 283,136 are invalid for the reasons thus given.

As to the claim of No. 273,585 and claim 3 of No. 281,640, which are claims to combinations, the opinion of the circuit court states that those claims are old, except in the immaterial point that the precise lines of cuts and the shape of the opening in the angle bar are not found in safes of prior manufacture; that the sheet metal cover is old, being shown in defendant's exhibit, "St. Louis Safe;" that the bars C and lower removable plate D, forming part of the [363] claim of No. 273,585, are old, it being immaterial that the safes in the manufacture of which they were used were square cornered, the corners of the angle frames, when bent having been round, and having been then made square by heating and hammering the metal on both sides of the corners; that fireproof safes had been filled from the bottom as early as 1879; that, although the patentee was the first to employ the combination claimed in the manufacture of round cornered safes, the change from square cornered safes was only a change in form; and that the combination was nothing more than an aggregation, and fell within the rulings of this court, in the cases cited, that such an aggregation was not patentable. We think these views are correct.

The decree of the Circuit Court is affirmed.

JOHN HOLLAND, *Appt.*, [396]

v.

MORRIS S. SHIPLEY ET AL., Doing Business as the SHIPLEY-TYRRELL MANUFACTURING COMPANY.

(See S. C. Reporter's ed. 396-398.)

Letters patent—when invalid.

In an action for the infringement of letters patent, granted to the plaintiff January 22, 1884, for "improvements in lead holders for pencils," it appearing upon the face of plaintiff's specification that there were already in use lead holding tubes for pencils with two or more slots at the lower end, so as to form elastic clamping fingers, closing upon the lead by means of a sliding sleeve, as well as tubes with a single slot and an interior screw thread,—*Held*, that the slots, the screw thread within, and the outer sleeve, being all old, and the combination of two or more slots with the sleeve, or of a single slot with the screw thread, being also old, it required no invention to make two or more slots in a tube threaded inside and sleeved outside.

[No. 249.]

Argued April 25, 1888. Decided May 14, 1888.

APPEAL from a decree of the Circuit Court of the United States for the Southern District of Ohio, dismissing a suit for the infringement of letters patent for improvements in lead holders for pencils. *Affirmed.*

The facts are stated by the court.

Mr. **George J. Murray**, for appellant:

It is clear that defendants' device embodies the invention covered by the two claims of complainant's patent.

Imhaeuser v. *Buerk*, 101 U. S. 647 (25:945); *Bates* v. *Coe*, 98 U. S. 37 (25:70); *Blanchard* v. *Putnam*, 75 U. S. 8 Wall. 420 (19:433).

Complainant was entitled to a decree in accordance with the prayer of the bill.

Sharon v. *Hill*, 22 Fed. Rep. 28; *Peterson* v. *Simpkins*, 25 Fed. Rep. 486; *Coffin* v. *Ogden*, 85 U. S. 18 Wall. 120 (21:821).

Messrs. E. E. Wood and *Edward Boyd*, for appellees:

A sale of the thing patented to an agent of the patentee, employed by him to make the purchase, on account of the patentee, is not, *per se*, an infringement.

Byam v. *Bullard*, 1 Curt. 100; Curt. Patents, 4th ed. § 300.

Mr. Justice **Gray** delivered the opinion of the court: [397]

This is an appeal from a decree dismissing a bill in equity for the infringement of letters patent granted to the plaintiff January 22, 1884, for "improvements in lead holders for pencils," which (omitting the drawings and the explana-

tion of them) fully shows the invention claimed, and the form of lead holders or lead tubes previously in use and known to the patentee, as follows:

"The object of my present invention is to hold the lead or crayon in pencils from slipping back within the tube when pressed upon by the act of writing, without danger of breaking the lead.

"Lead tubes now in common use are usually slotted at the lower end to form elastic clamping fingers, which fingers are closed upon the lead near its point end by a sleeve or a tube which moves longitudinally over the fingers. These fingers are either smooth upon the inside, or terminate at their ends in sharp inward projections or claws. The first kind soon becomes so smooth that the lead slips back when borne upon in the act of writing; and the second frequently breaks the lead when the clamping sleeve is tightened up, and when tightened up carefully the lead often breaks in use when writing with the pencil inclined. I overcome both these objections by making a fine screw thread within the lower end of the tube, before it is slotted to form the clamping fingers."

"The clamping fingers may, instead of being screw threaded upon the inside, be serrated or roughened to accomplish the same result; but the screw thread is much better, because by this means a uniformly even roughened surface
398] can be made within the lower end of the tube at comparatively small expense; and, as these pencils are designed to take the place of the common lead pencil, they must be made cheaply to insure their introduction into general use.

"I am aware that it is old to provide a pencil case for holding ordinary lead pencils with a sliding ring, to which are secured spring clamps having their holding surfaces serrated, and having their shanks bent to approach each other, then jut outwardly and downwardly at their free ends, so that a ring slide may be moved upon said shanks to cause the free ends of the clamps to grasp or release a pencil; and I am also aware that it is old to provide the lead holding tube of a pencil with an interior thread and a single slot. I therefore do not claim either of these devices.

"I claim as my invention:

"1. As a new article of manufacture, a lead tube for pencils, consisting, substantially as before set forth, of a tube provided at one end with internal or female threads and two or more longitudinal slots to form threaded fingers.

"2. The combination, with the lead tube provided at one end with internal threads and two or more longitudinal slots, of a clamping sleeve adapted to be adjusted upon the slotted end of the tube to press the threaded fingers upon a lead, substantially as described."

It thus appears upon the face of the plaintiff's specification that there were already in use lead holding tubes for pencils with two or more slots at the lower end, so as to form elastic clamping fingers, closing upon the lead by means of a sliding sleeve; as well as tubes with a single slot and an interior screw thread.

The slots, the screw thread within, and the outer sleeve being all old, and the combination of two or more slots with the sleeve, or of a single slot with the screw thread, being also old, it is too clear for discussion, that to make two or more slots in a tube threaded inside and sleeved outside required no invention; and it is therefore unnecessary to consider the evidence upon the question whether the plaintiff was the first person who did this.

Decree affirmed.

HENRY HERRMAN ET AL., *Plffs. in Err.*, [363]
v.
CHARLES E. MILLER ET AL., EXRS. of CHESTER A. ARTHUR, Late Collector of the PORT OF NEW YORK.

(See S. C. "*Herrman* v. *Arthur*," Reporter's ed. 363-370.)

Excessive duties—evidence—question of fact.

1. In an action to recover moneys exacted as excessive duties on the importation of goods, evidence offered by defendant to show that the goods imported bore a similitude to other goods in the market on which a specific duty was laid, *held* admissible.

2. *Held* further, that the question of similitude was one of fact, under the circumstances of the case, and should have been submitted to the jury under proper instructions; and that it was error for the court to direct a verdict for the defendant.

[No. 250.]

Argued April 25, 1888. Decided May 14, 1888.

IN ERROR to the Circuit Court of the United States for the Southern District of New York, to review a verdict for the defendant in an action to recover duties illegally exacted on goods imported. *Reversed.*

The facts are fully stated in the opinion.

Messrs. Stephen G. Clarke and **Edwin B. Smith**, for plaintiffs in error:

Upon the plaintiffs was thrown the burden of showing error on the part of the collector in this assessment.

Arthur v. *Unkart*, 96 U. S. 118 (24: 768).

As to the new issue raised by the government upon the trial, the burden of proof was upon the defense.

Chung Yune v. *Kelly*, 14 Fed. Rep. 642; *S. C.* 8 Sawy. 415; *Kennedy* v. *Hartranft*, 9 Fed. Rep. 18; *Ross* v. *Fuller*, 17 Fed. Rep. 224.

Any action of the collector, appraisers, or customs officers, which is proved, by admissible testimony, not to be in accord with law or fact is insufficient to displace the value declared on the entry.

Sampson v. *Peaslee*, 61 U. S. 20 How. 576 (15: 1025); *Morlot* v. *Lawrence*, 3 Blatchf. 123; *Vaccari* v. *Maxwell*, Id. 374; *Arthur* v. *Morgan*, 112 U. S. 501 (28: 827).

The appraisal, to supersede the invoice, must be correct.

Murphy v. *Arnson*, 96 U. S. 131 (24: 773).

An inquiry as to the resemblance of goods raised a new issue, outside the pleadings.

McKyring v. *Bull*, 16 N. Y. 304; *Codd* v. *Rathbone*, 19 N. Y. 37, 39; *Weaver* v. *Barden*, 49 N. Y. 286.

If the witnesses produced by the defense were not called as experts, then their testimony, upon the very conclusion to be ascertained by the jury, was a nullity.

Robertson v. *Stark*, 15 N. H. 109; *Concord R. R. Co.* v. *Greely*, 23 N. H. 237; *Protection Ins. Co.* v. *Harmer*, 2 Ohio St. 452.

Whether goods assessed for duty are of like description to certain enumerated articles is a question for the jury.

Greenleaf v. *Goodrich*, 101 U. S. 278 (25: 845).

So is the question of similitude.

Gamble v. *Mason*, 7 Am. L. Reg. 178; appeal dismissed, 62 U. S. 21 How. 390 (16: 81); *Ross* v. *Peaslee*, 2 Curt. 501; *Rechnagel* v. *Murphy*, 102 U. S. 199 (26: 131).

When the same article is twice enumerated the lower rate of duty must prevail.

Arthur v. *Sussfield*, 96 U. S. 129, 130 (24: 773); *Smythe* v. *Fiske*, 90 U. S. 23 Wall. 374 (23: 47); *Solomon* v. *Arthur*, 102 U. S. 211 (26: 147); *Fisk* v. *Arthur*, 103 U. S. 431 (26: 520); *Barber* v. *Schell*, 107 U. S. 617 (27: 490).

Mr. **G. A. Jenks**, *Solicitor-Gen.*, for defendants in error.

[364] *Mr. Justice* **Blatchford** delivered the opinion of the court:

This is an action at law, brought by Henry Herrman, Charles Sternbach, and Abraham Herrman, against Chester A. Arthur, Collector of Customs at the Port of New York, in the Superior Court of the City of New York, and removed by the defendant into the Circuit Court of the United States for the Southern District of New York, to recover the sum of $367, alleged to have been exacted by the defendant from the plaintiffs as excessive duties on the importation of goods made of calf hair and cotton, in the Port of New York, in November, 1876. At the trial, before a jury, the court directed a verdict for the defendant, which was rendered, and a judgment was entered for the defendant, for costs.

It appears by the bill of exceptions that the goods were described in the invoices and entries, some as "brown calf-hair sealskin," some as "brown calf-hair," and some as "brown calf-hair lustre." The duties were assessed at 50 cents a pound and 35 per cent *ad valorem*, as upon goods made of wool, hair and cotton. This assessment took place under the provision of schedule L of section 2504 of the Revised Statutes (p. 471, 2d ed.), which was as follows: "Woolen cloths, woolen shawls, and all manufactures of wool of every description, made wholly or in part of wool, not herein otherwise provided for: fifty cents per pound, and, in addition thereto, thirty-five per centum *ad valorem*." The evidence showed that the goods in fact contained no wool, the warp being of cotton and the filling of cow or calf hair. There were 18 cases of the goods; those in 12 of the cases cost under 40 cents a pound, and those in the remaining case cost over 40 and under 60 cents a pound. The plaintiffs protested against the liquidation, because the goods were [365] returned by the appraiser as a manufacture of wool, hair, and cotton, and, as such, liable to a duty of 50 cents per pound and 35 per cent *ad valorem*, and claimed, in the protest, that the goods were a manufacture of cow and calf hair and cotton, and liable, under section 2499 and the last paragraph of schedule A of section 2504 (p. 461, 2d ed.), to a duty of 35 per cent *ad valorem*, as partly manufactured of cotton; or else liable to a duty of 30 per cent *ad valorem*, under the provision of schedule M of section 2504 (p. 476, 2d ed.), as follows: "Hair cloth known as 'crinoline cloth,' and all other manufactures of hair, not otherwise provided for: thirty per centum *ad valorem*." Section 2499 provided as follows: "There shall be levied, collected, and paid on each and every nonenumerated article which bears a similitude, either in material, quality, texture, or the use to which it may be applied, to any article enumerated in this title, as chargeable with duty, the same rate of duty which is levied and charged on the enumerated article which it most resembles in any of the particulars before mentioned; and if any nonenumerated article equally resembles two or more enumerated articles, on which different rates of duty are chargeable, there shall be levied, collected, and paid, on such nonenumerated article, the same rate of duty as is chargeable on the article which it resembles paying the highest duty; and on all articles manufactured from two or more materials, the duty shall be assessed at the highest rates at which any of its component parts may be chargeable." The last paragraph of schedule A of section 2504 read thus: "Cotton braids, insertings, lace, trimming, or bobbinet, and all other manufactures of cotton, not otherwise provided for: thirty-five per centum *ad valorem*." In claiming that the duty should have been 35 per cent *ad valorem*, reference was made to the last clause of section 2499, as providing that, as the goods in question were manufactured from cotton and hair, the duty was assessable at the highest rate at which either of those two component materials was chargeable, and that the highest rate, being 35 per cent *ad valorem*, was imposed on the manufacture of cotton, under the last paragraph of schedule A of section 2504. The further claim of the [366] plaintiffs was that if the goods were not thus liable to a duty of 35 per cent *ad valorem*, as a manufacture of cotton, they were liable to a duty of 30 per cent *ad valorem*, as a manufacture of hair, under the above quoted provision of schedule M of section 2504. The plaintiff's counsel read in evidence a decision of the Treasury Department, made in 1874, to the effect that calf hair and cotton goods were held to be dutiable, under section 2499 of the Revised Statutes, at the highest rate at which any of their component parts was chargeable, namely, cotton, and not under the provision for manufactures of hair. This would have given a duty of 35 per cent *ad valorem*. But it clearly appeared at the trial that the duty assessed, of 50 cents a pound and, in addition thereto, 35 per cent *ad valorem*, was assessed under the erroneous view that the goods contained wool.

The plaintiffs having thus shown that the liquidation made was illegal, whether the proper duty should have been 35 per cent or only 30 per cent, the defendant sought to support the validity of the assessment of duties which he had made, under the first clause of section 2499, before quoted, that "there shall be levied, collected, and paid, on each and every nonenumerated article which bears a similitude, either in material, quality, texture, or the use to which it may be applied, to any article enumerated in this title, as chargeable with duty, the same rate of duty which is levied and charged on the enumerated article which it most resembles in any of the particulars before mentioned." It was contended by the defend-

ant that the goods in question, composed of cow or calf hair and cotton, were a nonenumerated article, and that they bore a similitude, in the particulars mentioned in section 2499, to articles enumerated as chargeable with duty under the following provision of Schedule L of section 2504 (p. 471, 2d ed.), namely: "Flannels, blankets, hats of wool, knit goods, balmorals, woolen and worsted yarns, and all manufactures of every description composed wholly or in part of worsted, the hair of the alpaca, goat, or other like animals, except such as are composed in part of wool, not otherwise provided for, valued at not exceeding forty cents per pound: twenty cents per pound; valued at
367] above forty cents per pound and not exceeding sixty cents per pound: thirty cents per pound; valued at above sixty cents per pound and not exceeding eighty cents per pound: forty cents per pound; valued at above eighty cents per pound: fifty cents per pound; and, in addition thereto, upon all the above named articles, thirty-five per centum *ad valorem*."

It was sought to be shown by the defendant that the goods imported in this case bore a similitude, in some one of the particulars mentioned in section 2499, to goods which had previously been in the market, of two classes, one composed of wool, hair, and cotton, and the other composed of goat's hair and cotton, although it appeared distinctly that the goods involved in twelve of the cases in question cost under 40 cents a pound, and, in this view, such of them as bore a similitude to the goat's hair and cotton goods would have been dutiable at only 20 cents per pound and 35 per cent *ad valorem*, instead of 50 cents per pound and 35 per cent *ad valorem;* and that the goods in the remaining case cost over 40 and under 60 cents a pound, and so would have been liable to a duty of only 30 cents per pound and 35 per cent *ad valorem* instead of 50 cents per pound and 35 per cent *ad valorem*.

The witnesses on the issue thus raised were all introduced on the part of the defendant. When both parties had rested, the counsel for the defendant moved the court to direct a verdict for the defendant, on the ground that the evidence was clear and undisputed, as to the two classes of prior goods, namely, the wool, hair, and cotton goods, and the goat's hair and cotton goods, that those goods existed and substantially resembled in every important particular the imported goods in question. The court granted the motion, and directed a verdict in favor of the defendant. The plaintiffs excepted, and have brought a writ of error to review the judgment.

The plaintiffs objected and excepted to the introduction of the testimony as to similitude offered by the defendant, on the ground that it was incompetent, irrelevant, and immaterial, and on the further ground that the defendant, having based his assessment on the view that the goods contained wool, could not now be per-
368] mitted to justify the assessment on any other ground. But we think that this objection was properly overruled. The suit was brought for an illegal exaction of duties, and, if the law in force at the time, properly interpreted, justified the exaction of the duties imposed, it was competent for the defendant to show it at the trial. The complaint alleges that the defendant, as collector, exacted as duties so much money, that the true duty was only so much, and that the plaintiffs claim to recover the difference. The answer alleges that the amount of money collected from the plaintiffs was the amount due from them to the United States, according to the rate of duty imposed by law upon the goods in question. This did not confine the issue solely to the question whether there was wool in the goods.

It appeared, in the course of the testimony put in by the defendant, that two of the three samples of the prior goods introduced by him in evidence cost over 80 cents a pound, the goat's hair in them being that of the mohair goat, as was also the goat's hair in the third sample; and that the mohair fibre came from the alpaca goat, and was sometimes a foot in length, but generally from six to seven inches long, while calf hair was always short, perhaps an inch or an inch and a quarter long. It also appeared, by the testimony, that the mohair goods were almost uniformly much finer in appearance than the calf or cow hair and cotton goods; that the cost of them was much higher; and that the plaintiffs' goods resembled certain vegetable fibre goods imported prior to 1875 and 1876, more nearly than they resembled the goat's hair and cotton goods or the mohair and cotton goods.

The direction of a verdict for the defendant in the present case is sought to be justified by the ruling of this court in *Arthur* v. *Fox*, 108 U. S. 125 [27: 675]. In that case, the article in question was called "velours," and was composed of cow or calf hair, vegetable fibre, and cotton, was an imitation of sealskin, and was used for manufacturing hats and caps. The goods were not specifically enumerated in the statute, but, in the use to which they were put, and in appearance and material, resembled manufactures of goat's hair and cotton, more nearly than any other article of commerce, the goods of both kinds being frequently commer- [369]
cially called "seals," and being made to represent sealskin, and being used for the purposes for which sealskin was used. The component material of chief value in "velours" was cow and calf hair, and not cotton. The importers claimed that the goods were dutiable at 35 per cent *ad valorem* under schedule A of section 2504, as manufactures of cotton, while the collector exacted a duty of 50 cents per pound and 35 per cent *ad valorem*, on account of the similitude the goods bore to manufactures composed wholly or in part of the hair of the goat, without wool, under section 2499 and the provision of schedule L of section 2504, in regard to manufactures composed wholly or in part of the hair of the goat and containing no wool. Inasmuch as the collector in that case imposed a duty of 50 cents per pound and 35 per cent *ad valorem*, the goods must have been valued at above 80 cents per pound, according to the terms of that clause of schedule L. The court instructed the jury to find for the importers, and this court held that the instruction was erroneous. The view taken here was, that the goods were nonenumerated, but were substantially like a manufacture of goat's hair and cotton, which was enumerated in the clause quoted from schedule L. One strong ground for the ruling made by this court is thus stated

in its opinion delivered by *Chief Justice* Waite. Speaking of the goods imported in that case, it said: "They are made of cotton and cow hair, and are evidently of equal quality with the manufactures of cotton and goat's hair, because, in this case, they are charged with a duty of fifty cents per pound, thus indicating a value of eighty cents a pound or over, which calls for the highest duty per pound put on the goat's hair goods."

In the present case, the samples of goat's hair goods introduced by the defendant as the standard of comparison, to make out the similitude spoken of in section 2499, were all of them mohair goods, two of which samples were worth over 80 cents a pound, and thus subject, under schedule L to the rate of duty imposed in the present case upon the goods of the plaintiffs; while it was proved that the plaintiffs' goods in twelve of the cases cost under 40 cents a [370] pound, and in the remaining case cost over 40 and under 60 cents a pound. Thus, as a matter of law, in the present case, the plaintiffs' goods, of such inferior value and material, were compared with costly mohair goods, and the duty assessed on them was held to have been properly charged.

We are of opinion that the question of the similitude was one of fact, which should have been submitted to the jury, under proper instructions. As there was error in the particular mentioned, we do not deem it proper to consider any of the other questions raised and discussed by counsel.

The judgment is reversed, and the case is remanded to the Circuit Court with a direction to award a new trial.

---

[484] ROBERT E. JENKINS, Assignee in Bankruptcy of SAMUEL J. WALKER, *Plff. in Err.*,

v.

INTERNATIONAL BANK OF CHICAGO ET AL.

(See S. C. Reporter's ed. 484-489.)

Supplemental bill—Statute of Limitations.

1. Strictly new matter arising after the filing of a bill, properly set up by way of supplemental bill, in support of the relief originally prayed for, cannot be considered as a new cause of action.
2. The Statute of Limitations has no application to such supplemental bill.

[No. 254.]

Submitted April 26, 1888. Decided May 14, 1888.

IN ERROR to the Supreme Court of the State of Illinois, to review a judgment affirming a decree of the Circuit Court of that State, for the foreclosure and sale of certain collateral securities, in an action brought by the International Bank against Samuel J. Walker *et al.* *Affirmed.*

Reported below in 111 Ill. 462.

Statement by *Mr. Justice* **Matthews**:

This case was before the Supreme Court of Illinois at the March Term, 1881, when the decree therein, in favor of the present defendants in error, was reversed, and the cause was remanded to the Circuit Court of Cook County, Illinois, for further proceedings. That judgment is reported in 97 Ill. 568. The cause was reinstated by the Circuit Court, and after further proceedings therein a final decree was rendered in favor of the defendants in error, which on appeal was affirmed in the Supreme Court of Illinois on November 17, 1884, and is reported in 111 Ill. 462. From that decree the plaintiff has brought the present writ of error.

For the purpose of determining the only federal question arising upon the record, the following statement of the case made by the Supreme Court of Illinois, and prefixed to its opinion as reported in 111 Ill. 462, is sufficient. That statement is as follows:

"A bill in chancery was filed February 17, 1875, in the Cook County Circuit Court, by the International Bank against Samuel J. Walker and other persons to foreclose and sell certain collateral securities which had been pledged by Walker to the Bank to secure the payment of [485] principal notes of various dates made by Walker to the Bank, some twenty-two of which were still held by it, and about ten others transferred to the other parties to the suit. The prayer of the bill was that a decree might be entered fixing and establishing the amount of indebtedness due the Bank from Walker, and for a sale of the collateral so pledged, and the application of the proceeds to the payment of such indebtedness. Walker answered, alleging that a large amount of usurious interest entered into and formed a part of the alleged indebtedness, and insisting that an account be taken between the parties, and that such usurious interest be applied toward the satisfaction of such indebtedness, and that the collaterals be surrendered. Walker also filed a cross bill making the same allegations, and praying for an account, and the application of such usurious interest, and for a surrender of the collaterals.

"July 6, 1877, the circuit court made an interlocutory decree in the cause, which denied the right to interpose the defense of usury, and directed an account to be taken of what was due on the principal notes held by the Bank, excluding the defense of usury and of usurious payments of interest. In pursuance of an account taken as thus directed, dated January 15, 1878, a final decree was entered on April 25, 1878, finding the amount due the Bank from Walker on the notes held by it to be, on January 15, 1878, $172,474, and directing a sale of the collaterals held by the Bank to satisfy it. April 26, 1878, Walker went into bankruptcy, and July 31, 1878, Jenkins, the appellant, received the deed as his assignee in bankruptcy. The decree of April 25, 1878, was by this court, at its March Term, 1881, in *Jenkins* v. *International Bank*, 97 Ill. 568, reversed on the ground that the direction to the master, in the order of reference not to consider the question of usurious payments of interest upon any of the notes, was erroneous. The collaterals so sought to be sold had been specifically pledged by Walker to the Bank, each to secure a particular note. The Bank also held an agreement from Walker that each of the collaterals, though specifically pledged as security for a specific principal note, should also, after the [486]

satisfaction of such principal note, be held as security for Walker's entire indebtedness to the Bank, if any surplus remained which could be so applied after the satisfaction of such particular note.

"On March 11, 1874, George Wilshire and others filed their bill of complaint against the International Bank, David Frey, Samuel J. Walker and others, alleging that they had purchased of Walker certain premises, and setting out that Frey claimed to own a certain mortgage upon the same, executed by Walker prior to their purchase, which Frey obtained from the Bank, but that there was nothing due upon it, and praying that the same might be surrendered and canceled. Frey filed a cross bill, setting up his principal note and the collateral note and security so executed by Walker to the Bank, alleging that he had bought said principal note of the Bank for full value, and praying for the foreclosure of the mortgage and sale of the premises. The Bank also filed its cross bill against Wilshire, Frey, Walker and others, setting up its general collateral agreement above referred to, alleging its right, by virtue thereof, to any surplus that might remain after the satisfaction of the indebtedness so due to Frey on said principal note which had been sold by it to Frey, not exceeding the amount due on the collateral note. The said general collateral agreement provided that the Bank should have the benefit of said surplus, though it had sold such principal note to a third party. The Bank, in its cross bill, set up its entire indebtedness so due to it from Walker in the same way and with the same particularity that it had set up the same in the bill in this cause now under consideration, alleging that the notes were due and payable, and asking that it might have any surplus applied to the payment of such indebtedness after the satisfaction of the amount due to Frey. Walker answered that cross bill in the same way, and alleging the same facts that he had alleged in answer to the bill in this cause. He also filed a cross bill therein, setting up the same facts that he had set up in the cross bill filed in this cause, and prayed for an account between himself and the [487] Bank, and for the application of all usurious interest in satisfaction of his indebtedness to the Bank, and for a return of the Bank's collaterals, just as he had done in this case by his cross bill.

"On February 28, 1878, a decree was entered in the Wilshire suit, finding the amount due from Walker to the Bank to be the sum of $172,474. That decree stands in full force and effect, and over five years have elapsed since the entry of the same. The case at bar having been redocketed in the circuit court after the reversal of the first decree, on November 26, 1883, by leave of court the complainant, the International Bank, filed a supplemental bill, setting up the said proceedings, pleadings, and decree in the Wilshire suit as a former adjudication, and in bar to any further proceedings by Jenkins, assignee, for an account under his cross bill herein, and as a conclusive adjudication of the amount due the Bank upon the evidence of indebtedness set out in its original bill herein. The circuit court held the said former adjudication in the Wilshire suit a bar to any further account as to what was then due, and found the amount due upon the principal notes set out in the bill and offered in evidence to be the sum of $172,474 on January 15, 1878, as determined by the decree in the Wilshire suit. After the allowance of subsequent collections, the court found the amount due at the time of the decree to be $143,630.22, and rendered a decree for a sale of the collateral securities to satisfy said sum. This decree was affirmed by the appellate court of the first district, and the assignee appealed to the Supreme Court of the State."

Mr. **William T. Burgess,** for plaintiff in error.

Messrs. **Geo. W. Smith** and **A. M. Pence,** for defendants in error.

Mr. Justice **Matthews** delivered the opinion of the court:

Section 5057 of the Revised Statutes provides that "no suit, either at law or in equity, shall be maintainable in any court between an assignee in bankruptcy and a person claiming an adverse interest, touching any property or [488] rights of property transferable to or vested in such assignee, unless brought within two years from the time when the cause of action accrued for or against such assignee. And this provision shall not in any case revive a right of action barred at the time when an assignee is appointed."

It is contended by the plaintiff in error that the Supreme Court of Illinois erred in giving effect in this suit to the decree of February 28, 1878, in the Wilshire suit as set up by the International Bank in its supplemental bill filed herein November 26, 1883, more than two years after July 31, 1878, when the assignee in bankruptcy succeeded to the title of the bankrupt Walker. This contention is based upon the proposition that the filing of that supplemental bill in this proceeding was the commencement of a new suit against the assignee in bankruptcy by a person claiming an adverse interest touching rights of property vested in him. This is the only federal question presented by the record.

In support of this proposition, it is argued on behalf of the plaintiff in error that the supplemental bill set out, and sought a recovery upon, a cause of action distinct from that stated in the original bill. The original bill prayed for a decree against Walker upon his notes held by the Bank, and for the satisfaction thereof a sale of the property held as security therefor. During the pendency of that bill precisely the same matters were put in issue in the Wilshire suit between Walker and the Bank, and in that suit a decree was rendered finding the amount due. That decree in the Wilshire suit stands unreversed, and operates as an estoppel by way of *res adjudicata* between the parties. By way of proof or in pleading, it would be good as a bar in any subsequent suit between the same parties upon the same issues. Having been rendered after the institution of the present suit, it was competent for the complainant to bring it forward by a supplemental bill as conclusive evidence of the amount due for which it was entitled to take a decree, and as a complete answer to the defense set up by the plaintiff in error as the assignee of the bankrupt to

the relief prayed for in the original bill, and to
[489] the relief sought by the cross bill. It was strictly new matter arising after the filing of the bill, properly set up by way of supplemental bill, in support of the relief originally prayed for. It can in no sense be considered as a new cause of action. It was not a bill to enforce the decree nor was the complainant obliged to rely upon it as the sole ground of recovery, on the ground that the original cause of action had become merged in it. If the notes were merged in the decree, it was simply a change in the nature of the evidence to support the complainant's title to relief; the indebtedness remained the same, and the equity of the complainant to a foreclosure and sale of the securities remained unchanged. The Statute of Limitations, therefore, invoked by the plaintiff in error has no application.

This being the only federal question arising upon the record, and having, in our opinion, been decided correctly by the Supreme Court of Illinois, it is not within our province to consider any other question in the case.

The judgment of the Supreme Court of Illinois is therefore affirmed.

---

[518] WILLIAM A. STUART, *Appt.*,

v.

C. S. GAY ET AL.

(See S. C. Reporter's ed. 518-532.)

Judicial sale—liability of purchaser—interest.

1. Where the purchaser at a judicial sale refuses, without cause, to fulfill his contract, the plaintiff may obtain an order for the estate to be resold, and for the purchaser to pay the expenses arising from the noncompletion of the purchase, the application, and the resale, and any deficiency in price arising upon the second sale, although the property had been conveyed to the purchaser.

2. A purchaser bound to pay specific sums, at given dates, is not interested in the manner in which the proceeds of the sale shall be distributed among the creditors entitled thereto, nor in the method of computing interest on such distribution.

3. Where the master calculated interest upon all the debts down to the day of the closing of his report, from that period the aggregate became the sum of the debt, the whole of which thenceforth properly carried interest.

[No. 255.]

Submitted April 26, 1888. Decided May 14, 1888.

APPEAL from a decree of the District Court of the United States for the District of West Virginia, in a suit brought to enforce certain deeds of trust and mortgage liens, said decree being for a resale of the property at public auction to the highest bidder, unless the purchaser should pay the amount decreed against him as due on the sale, within a certain time. *Affirmed.*

Statement by *Mr. Justice* **Matthews**:

The decrees which are the subject of the present appeal were rendered in a suit brought to enforce certain deeds of trust and mortgage liens upon a tract of land in Greenbrier County, West Virginia, known as the White Sulphur Springs, in which it became necessary to sell the property for the payment of debts, and to marshal the liens on the same in the order of their priority. The bill was filed in March, 1868, by Charles S. Gay and his wife and others, creditors and lienholders, suing as well for themselves as for all other creditors having liens on the real estate, the title to which, subject to the incumbrances, was then vested in the White Sulphur Springs Company. A portion of the indebtedness was represented by negotiable bonds, with coupons representing accruing interest thereon, and some of these
[519] had been severed from the principal obligation and bought for value by other holders.

On April 23, 1868, the cause was referred to a master to report the amount and priorities of all liens upon the property, whether created by mortgage, deed of trust, judgment, or otherwise. On April 21, 1876, the master filed a report giving a statement of the liens, the name of each creditor, with the amount of the principal debt due to each, the amount of the interest accrued thereon, and showing the total debt in each case, including principal and interest. The indebtedness was classified according to the order of priority of the liens. The first six classes of debts enumerated in this report are the only ones material to be considered, as in any event they absorb the whole amount for which the property was subsequently sold. In the aggregate they amounted to $299,857.88, of which $185,133.27 is principal, and $114,724.61 is interest. The interest was calculated to and aggregated as of the same date, October 15, 1875, as to all the debts except the debts in the first class known as the Singleton trust debt, upon which the unpaid interest, amounting to $36,000, was calculated to July 1, 1868; the master reporting that all interest accrued on this debt after that date had been paid.

On April 28, 1876, the court by a decree confirmed this report, no exception having been taken thereto, the decree having in fact been entered by the consent of parties. That decree also contained a clause declaring that the interest on the Singleton debt, of $36,000, which had remained unpaid from July 1, 1868, should constitute a principal sum, bearing interest from the date of the decree. There was no express declaration in the decree in respect to the computation of interest on the other debts after October 15, 1875.

On May 5, 1877, a decree of sale was made in which there was no finding of any specific amount due, in default of the payment of which the property should be sold, but a recital that it appeared to the court "that it is now for the interest of all the parties to this suit and of all others interested in the subject involved therein, and there being now no objection, except on the part of the White Sulphur Springs Com-
[520] pany, that there shall be a sale of the property known as the White Sulphur Springs property, and an application of proceeds of said sale among the parties entitled thereto, according to their legal rights and priorities." The decree appointed commissioners to make the sale, who were required to receive from the purchaser the payment of 10 per cent of the purchase money in cash at the time of the sale, and for the residue giving a credit of one, two, three, four and five years, in equal installments, with interest thereon from the day of sale, and requiring good personal security for the payment of the

first of said annual installments, and retaining the title as further security for all of said installments, or, in lieu of such personal security required of the purchaser for the first installment of purchase money, the commissioners were authorized to receive from the purchaser as collateral security therefor any evidences of debt proved in the cause, and which it may appear to the commissioners will certainly be paid from the proceeds of the sale, and which may belong to the purchaser offering the same as collateral security, the just and fair amount of which collateral shall be determined by the commissioners.

On May 4, 1878, no sale having been made, the court entered a decree reciting that the interest on three bonds known as Erskine bonds, being those reported in class No. 6 by the master, and being designated as Nos. 1, 2, and 3 of that class, for the year ending October 15, 1868, and on the Beard bond, designated as No. 4, in the same class, from October 15, 1868, to October 15, 1877, except 4 per cent for the two years ending October 15, 1875, and October 15, 1877, had not been paid; that the property was ample to pay these bonds, principal and interest, as well as all prior liens, and that a sale of the property had been postponed in the interest of subsequent liens; and adjudged that the said unpaid interest on said bonds should stand on the same footing with the interest on said bonds which is evidenced by coupons, and bear interest from the dates at which said interest became due until paid; and that the assignees and holders of the interest of said bonds for said years, or any part thereof which had been assigned and transferred by the holders of the bonds, should be entitled to have [521] priority over said bonds, coupons, and other interest not transferred; such interest, however, transferred as aforesaid, to be entitled to priority according to the dates of its maturity.

On May 4, 1880, a decree was rendered confirming a sale of the premises previously reported as having been made by the commissioner for that purpose, to William A. Stuart, for $340,000, wherein it was directed that the purchaser be at once put in possession of the property, the title thereto being retained by the court as security for the payment of the purchase money. The commissioners were directed to proceed to collect from the purchaser the cash payment of 10 per cent upon the aggregate of the purchase money. The decree also contained a declaration that the court "will hereafter make such orders as may be proper for the collection of the deferred installments of the purchase money and the distribution of the same among the parties to this suit, according to their respective rights and interests." The commissioners in their report of the sale stated that they had taken from the purchaser his five bonds, each for the sum of $61,290, payable, respectively, at one, two, three, four, and five years, bearing 6 per cent interest from the day of sale, and on the bond due one year after date that they had taken personal security.

On March 1, 1882, a decree was made appointing a special commissioner for that purpose, and directing him to execute to William Stuart a deed with a special warranty for all the property purchased by him at the sale made on March 31, 1880, in pursuance of the decree of sale previously rendered in the cause; and directing that the deed reserve a lien upon its face for the unpaid purchase money until the same is fully paid off and discharged. The commissioner was further authorized and directed to settle with the said Stuart at any time, upon his application, so far as the bonds for the purchase money had already matured, or as the same should thereafter mature, "by crediting upon the said bonds the amounts to which the said William A. Stuart is entitled to credit for the liens held by him, as recognized by the previous decrees of this court establishing the order and priority of liens, and by receiving from him in cash so much of the amount of [522] said bonds as may be going to other lienholders;" and the commissioner "is also authorized to cancel and deliver to said William A. Stuart any one or more of his said bonds, whether the same have matured or not, on being satisfied that the said Stuart is then holder and owner of all the claims payable out of the proceeds of such bond or bonds." The commissioner was also instructed to report to the court from time to time his proceedings under the decree.

On January 5, 1884, a decree was made upon a report of the commissioners of sale asking to be instructed as to the proper manner of disbursing the fund. It was therein ordered and decreed "that the commissioners of sale, in disbursing and distributing the proceeds of the sale of the White Sulphur Springs property, heretofore made by them under a decree of this court in this cause, and in paying therewith the debts heretofore reported and decreed to be paid, shall calculate interest upon the aggregate amount of the principal and interest thereof, aggregated as of October 15, 1875, the date to which the calculations are brought in the report of commissioner H. M. Mathews, heretofore made, filed, and confirmed in this cause, and not upon the original principals alone."

On May 12, 1885, the commissioners of sale reported that the fourth and fifth bonds executed by Stuart, the purchaser, were past due and unpaid, each of said bonds being for the sum of $61,290, with interest from March 30, 1880, on which there was due at the date of said report the sum of $160,212.06. An order was thereon entered that a rule issue against the said William A. Stuart, returnable on the 23d day of the same month, requiring him to appear and show cause why the property sold as aforesaid by the commissioners of sale in this cause to him should not be resold at public auction for cash to pay the unsatisfied installments of purchase money due by him as aforesaid, and why a decree should not be made against him for so much of the unpaid purchase money as the property upon a resale might not pay off and discharge, together with the costs of the proceedings. This rule having been returned served, Stuart, by leave of the court, filed a [523] petition praying that the decree of January 5, 1884, be vacated; and that in lieu thereof the commissioners of sale be directed, in distributing the proceeds of the sale of said real estate and paying the five first liens thereon, to calculate the interest on the original principal of each of said liens, and not upon the principal and interest thereof aggregated and compounded as directed by the decree of January 5, 1884. In that petition he sets forth that by computing

interest on the principal sums, as set out in the master's report of April 21, 1876, included in the first six classes, there would be due in the aggregate about the sum of $330,000 on the day of sale, and that according to that calculation the net proceeds of the sale, after deducting the costs of suit, would pay off in full the five first liens and about $130,000 on the sixth, but a very much less amount computing interest on the principal and interest aggregated of said liens from October 15, 1875. The petition further alleges that before the sale of the real estate to himself, he became the purchaser of a large number of the debts reported as liens in the sixth class, and thus became entitled to all of the proceeds of the sale applicable to that class, with certain exceptions therein stated. The petition thereupon states that by the order of January 5, 1884, made long after the sale, and after the petitioner had become entitled to the proceeds thereof applicable to the larger part of the sixth class of debts, the interest-bearing fund of said six first liens was changed from $185,133.27, the original principal of said liens, to the sum of $299,857.88, the principal and interest of said liens aggregated as of October 15, 1875; and the sum of $114,724.61 interest on said six first liens is thus made to bear interest for almost four and one-half years before sale is made, and also after sale until reached in their proper order of priority as the purchase money of said real estate fell due under the said sale; and that in this way a sum over $30,000 of the proceeds of said sale is applied to the payment of interest upon the interest of said liens, [524] the principal part of which will, under said order of January 5, 1884, be applicable to the interest computed on the said sixth lien, and the entire amount of which will be deducted from the principal of the debts in the said sixth lien, all of which principal is owned and controlled by the petitioner except $907.67. On May 25, 1885, this petition was considered, its prayer for relief denied, and the decree of January 5, 1884, confirmed. Stuart then moved the court to quash and discharge the rule awarded against him on a previous day of the term, which motion the court overruled; and thereupon, by leave of the court, he filed an answer to the rule; when a decree was rendered finding due from Stuart on account of the purchase money for the said sale, the sum of $160,212.06, with interest thereon from May 12, 1885, for the payment of which a decree was rendered against him, and that unless within thirty days from that date he should pay the amount decreed against him, the commissioners should proceed, upon proper notice, to resell the property heretofore sold in the cause and bought by him, at public auction, to the highest bidder for cash. From this decree Stuart prayed an appeal, which the court refused to allow "because the decrees in this cause fixing the rights of the parties, determining the amounts, dignities, and priorities of the debts, and directing sale of the property, were all entered more than five years ago, and the decree of January 5, 1884, was simply explanatory of a former decree."

Subsequently, on July 2, 1885, a petition for an appeal was presented by Stuart to *Mr. Justice* Harlan of this court, praying an appeal which was allowed, from the decree of January 5. 1884, compounding the interest on the debts theretofore reported in said cause against the company as of October 15, 1875, and directing the commissioners, in distributing the proceeds of the sale of the company's property, to pay interest upon the interest on the said debts as of the date last aforesaid, and from the decree rendered May 25, 1885, rejecting the petition for relief from the decree of January 5, 1884, and directing a resale of the property. The errors assigned are nine in number, but may be reduced to two:

First. That the decree of January 5, 1884, is erroneous in aggregating all the principal and interest of all the debts reported against the White Sulphur Springs Company as of the 15th day of October, 1875, as stated in said Commissioner Mathews' report, and making said aggregate an interest-bearing fund as of that date. [525] And in reference to this it is stated that "the court, by its decrees of April 28, 1875, and of May 4, 1878, had adjudicated just how much of the interest on these debts should bear interest and from what time, viz., $36,000 of the Singleton debt from April 28, 1876; one year's interest on the Erskine debt from October 15, 1868; and the interest on the S. C. Beard debt of $907.67 for the years ending October 15, 1868, to October 15, 1877, subject to certain credits, and gave special reasons therefor; and it was error in the court to reverse or modify the adjudication so made, especially after your petitioner had become the owner of liens affected by said adjudication and the purchaser of the property, with the right to use said liens in payment therefor, relying upon the adjudication aforesaid, and as the same had been adjudicated" in accordance with the decree of March 1, 1882.

Second. The decree of May 25, 1885, is erroneous in overruling the motion to quash and discharge the rule for a resale, and in decreeing a resale of the property upon rule after the court had parted with the title thereto, and had conveyed the property to the appellant, retaining a vendor's lien in the deed for the unpaid purchase money.

Mr. **E. B. Knight**, for appellant.

Messrs. **Alex. F. Mathews** and **John E. Kenna**, for appellees.

Mr. Justice **Matthews** delivered the opin- [526] ion of the court:

The appellant cannot justly complain of the decree for a resale on the ground that it was rendered upon a rule to show cause. It does not appear that he was or could have been prejudiced by the summary nature of the procedure. He had full opportunity to answer, and was heard upon all the matters of defense, both in his answer to the rule and his petition for a rehearing of the decree of January 5, 1884. All the equities to which the appellant conceived himself entitled were fairly and fully before the court. No rights of innocent strangers had intervened, although the appellant had conveyed his title to the White Sulphur Springs Company. That company acquired its interest *pendente lite*, and with full notice from the record that the purchase money was in part unpaid, and that there was a subsisting lien reserved as security for its payment. The action of the court was simply to enforce its own decree against a purchaser from itself to compel

compliance on his part with his contract. The cause was open and pending, awaiting a final decree distributing the proceeds of the sale, in which no further step could be taken until those proceeds were paid into court in compliance with its orders. For that purpose the court had control of the title to the real estate sold by virtue of the decree for sale, and the reservation of a lien for the unpaid purchase [527] money expressed in the deed. There was no reason for a resort to an original bill; the most suitable and convenient practice was to enforce the obligation of the purchaser in the same cause by a supplemental proceeding, and it was within the discretion of the court to adopt as the proper method in this case the form of a rule to show cause.

Such is the clear implication from what was said by this court in *Koontz* v. *Northern Bank*, 83 U. S. 16 Wall. 196, 202 [21: 465, 468]: "If * * * the court was deceived by the report of the receiver or master, and the purchaser participated in creating the deception, it could undoubtedly, at any time before the rights of innocent purchasers had intervened, have set the whole proceedings, including the deed, aside. But after the rights of such third parties had intervened its authority in that respect could only be exercised consistently with protection to those rights."

The rule is thus laid down in 2 Daniell's Chancery Practice, 1282, chapter 29, section 1: "According, however, to the present practice, a more complete remedy is afforded against the purchaser refusing without cause to fulfill his contract; for the plaintiff may obtain an order for the estate to be resold and for the purchaser to pay, as well the expenses arising from the noncompletion of the purchase, the application, and the resale, as also any deficiency in price arising upon the second sale. This order was made by *Lord* Cottenham in *Harding* v. *Harding*, 4 Myl. & C. 514, after consultation with the other judges of the court; and although in that case the purchaser was a defendant in the cause, it does not seem that that fact was considered as necessary in order to enable such an order to be made." In *Campbell* v. *Gardner*, 11 N. J. Eq. 424, 425, it was held that after a sale upon an execution out of a court of chancery, and a delivery of the deed, the court may, upon a proper cause made, open a sale upon a petition, and it is not a valid objection to this course that the deed has become a matter of record. If a resale is ordered, the court may require the first purchaser to release to the purchaser on the resale all the title he may have acquired, so that the title may stand upon the record wholly disembarrassed. See *Conover* v. *Walling*, 15 N. J. Eq. 173.

[528] As the court below committed no error to the prejudice of the appellant in the mode of the procedure, we have to consider whether it disallowed any substantial equity to which he was entitled. The equity of the appellant, then asserted and here renewed, arises upon his construction of the orders and decrees of the court. The decree of March 1, 1882, upon the authority of which the deed was executed and delivered to the purchaser, and which directed that a lien should be reserved therein for the unpaid purchase money until the same is fully paid off and discharged, also directed the commissioners to settle with the purchaser upon his application, so far as the bonds for the purchase money had already matured, or as the same should thereafter mature, "by crediting upon the said bonds the amounts to which the said William A. Stuart is entitled to credit for the liens held by him, as recognized by the previous decrees of this court establishing the order and priority of liens, and by receiving from him in cash so much of the amount of said bonds as may be going to other lienholders." And the commissioners were "also authorized to cancel and deliver to said William A. Stuart any one or more of his said bonds, whether the same have matured or not, on being satisfied that the said Stuart is then holder and owner of all the claims payable out of the proceeds of such bond or bonds."

It appears that in pursuance of this authority, the commissioners of sale, on October 20, 1883, received from Stuart certain securities designated by reference to the list and classification contained in the master's report of April 21, 1876, specifying the amount of the principal sum represented by each, but without any calculation of interest, or any statement of the aggregate amount which on account thereof was to be credited on the bonds of the purchaser given for the purchase money. The language of the receipt given by the commissioners is: "Received of W. A. Stuart the above securities, which are applied first to the discharge of the three purchase-money bonds of said Stuart first falling due, given for the Greenbrier White Sulphur Springs property sold by the United States District Court, at Charleston, the said bonds being for $61,290 each, and bearing in- [529] terest from March 31, 1880, and which are this day delivered to said Stuart. The amount covered by this list of securities, after discharging the three bonds aforesaid, is to be by us credited on the fourth bond of said Stuart of like amount with each of the other three and bearing interest from same time."

The specific claim made by the appellant is that he is entitled to have these securities credited on his purchase-money bonds at an amount in the aggregate ascertained by a calculation of simple interest, upon the face of the principal sum, from the time when interest began to accrue and became in default until the date of their application to the payment of the purchase-money bonds, with the exception of the instances where by previous decrees interest upon interest had been expressly allowed; whereas the rule adopted by the court by the order of January 5, 1884, required the commissioners of sale, in distributing the proceeds of sale, and in paying therewith the debts reported and decreed to be paid, to calculate interest upon the aggregate amount of principal and interest thereof aggregated as of October 15, 1875, the date to which the calculations are brought in the report of the master filed April 21, 1876.

It is complained of this decree that it was made after the rights of the parties had become fixed by what had already been done under the previous orders of the court, and that the situation of the appellant was thereby altered greatly to his disadvantage. In reliance upon his construction of the previous orders of the court, the appellant had become the

purchaser of almost all the obligations enumerated in the sixth class of the master's report in the expectation that, upon a calculation of the amount due to those entitled to priority, the obligations thus acquired by him would be satisfied, or nearly so, out of the proceeds of the sale. The transactions by which he acquired the ownership of these claims took place respectively on April 23, 1875, March 15, 1876, and March 31, 1880, the last being the date of the sale.

It is evident, in the first place, that the cause of complaint asserted by the appellant does not [530] belong to him legitimately in his capacity as purchaser. The decree for sale rendered May 15, 1877, did not contemplate payment of the purchase money otherwise than in money. It gave a credit running through a period of five years in equal annual installments, with interest on each. There was nothing in the decree which authorized the purchaser to assume that he would not be called upon to pay each installment as it fell due in cash. As a purchaser, therefore, bound for the payment of specific sums at given dates, and who cannot be compelled to pay more, and has no right to expect to pay less, it must be a matter of indifference how the proceeds of that sale shall be distributed among the creditors entitled thereto. The different modes of computing interest on the debts to be paid may affect relatively the creditors themselves, giving to one class more and to the other less, but it can make no difference in the amount of the fund to be distributed arising from the proceeds of the sale. The complaint of the appellant, therefore, if he has any, must be put forward in his capacity as a creditor in respect to his rights upon distribution; but upon the view most favorable to him the distribution of the proceeds of the sale, and all questions arising thereon as between creditors, were before the court and undecided, except in the instances already referred to where express declarations were made in respect to the mode of computing interest upon interest in individual cases. The appellant was bound to know, and ought to have acted upon the assumption, that all possible matters of question to arise upon the distribution of the proceeds of the sale were still open for the final decision of the court. If he chose to act upon his individual judgment of what that decision would be, he acted at his peril. The decree of January 5, 1884, was such a decision, directing the mode of calculating interest upon the debt in distributing the proceeds of sale, and there is nothing in it inconsistent with any prior decision or decree of the court upon the same subject. Neither the decree of sale of May 5, 1887, nor the decree of March 1, 1882, directing the execution of the deed and reserving a lien for the unpaid purchase money, contained any direction as to the mode of computing interest upon the debts to [531] be paid. It cannot, therefore, be now held that the appellant has been misled to his disadvantage in having acted upon the faith of any of the previous decrees of the court in the cause.

The question, however, still recurs whether the rule for computing interest on the debts as the basis of distribution adopted by the court in its decree of January 5, 1884, is correct as matter of law. On this point there is no reason for doubt. The decree of sale, as we have already stated, contained no finding of the amount of the indebtedness, nor of the persons to whom it was owing, and no order for its payment as a condition of redeeming the property from the necessity of sale. But the report of the master of April 21, 1876, contained a full and carefully prepared detail of all the items constituting the indebtedness, with a list of the creditors, a classification according to the order of priority in the matter of lien, and a calculation of interest to October 15, 1875, upon all debts, except those embraced in Class No. 1, in respect to which special provision was subsequently made showing the total amount then due to each creditor. It is not stated anywhere in the record why the date of October 15, 1875, was selected by the master as a place of rest in the calculation of interest, but it must have been taken as the most convenient day for calculations in reference to closing the report, which evidently required considerable time for its preparation. If the calculation had been made as of the date of the decree for sale, with a view to the insertion therein of the amounts due to the several creditors, on payment of which the sale might be averted, the interest would have been brought down most properly to that date and added to the principal to constitute the whole sum then payable. If not paid at that time, the aggregate of principal and interest thus combined would have constituted the new principal, which, according to the uniform practice of the court, would bear interest from that date. In that case there could have been no complaint made against compounding interest. We think a similar effect must be given to the decree of the court confirming the master's report made April 28, 1876. It substantially declared the amount due October 15, 1875, as consisting of the principal sums and interest to that date added for [532] the purposes of the sale and distribution, and the decree of January 5, 1884, directing the calculation of interest for purposes of distribution upon the aggregate amount of the principal and interest as of October 15, 1875, was only a proper explanation of the decree of April 28, 1876, confirming the master's report. The date of the confirmation of that report was a suitable period in the progress of the cause, where the creditors were so numerous and the calculations so complicated, for the court to fix, for the information and guidance of all concerned, the amount severally due to each creditor with the order of priority in which he was entitled to be paid. The amounts to be found due necessarily embraced the principal sum with the accrued interest up to a fixed date, and from that period the aggregate became the sum of the debt, the whole of which thenceforth properly carried interest. No exception was taken to the report; it was confirmed by the court; and, in our opinion, it cannot reasonably bear any other construction than that which the court subsequently placed upon it.

Upon the whole case, no injustice has been done the appellant; and the decree of the District Court of West Virginia is affirmed.

399] JAMES W. HOSFORD ET AL., *Plffs. in Err.*,
v.
GERMANIA FIRE INSURANCE COMPANY ET AL.

(See S. C. Reporter's ed. 399-404.)

Question certified—insurance application—incumbrance—smoking—when does not avoid policy—clause of policy—mortgage.

1. The question certified to this court on division of opinion, whether plaintiffs or defendants are entitled in law to recover judgment on the special verdict in this case, is too general to be answered, because it refers the whole case to the decision of this court.
2. Where, in an application for insurance, the question is put, "If mortgaged, state the amount," an answer thereto stating the principal sum due on the mortgage is sufficient.
3. Where the insurers have put no question in the application as to the nature or amount of incumbrances otherwise than by mortgage, they cannot object that no information was given upon that subject, and there was no breach of warranty in not disclosing a lien upon the premises insured, for unpaid taxes.
4. Where there is a question in the application whether smoking is "allowed on the premises," which is answered in the negative, this has regard only to the rule established upon the subject at the time of the application, and not to the question whether that rule may be kept or broken in the future.
5. The jury having found that the assured forbade smoking in the mill, the mere fact that other persons, or even one of the assured, did afterwards smoke there is not sufficient to avoid the policy.
6. The clause of the policy which requires the interest of the assured, if "other than the entire, unconditional and sole ownership of the property for the use and benefit of the assured," or if "incumbered by any lien, whether by deed of trust, mortgage or otherwise," to be so represented by the assured and so expressed in the policy, is to ascertain whether his interest comes within either of these two descriptions, and not to call for information as to the nature or amount of any incumbrances.
7. Such clause is fully satisfied by the statements in the application that there is an incumbrance on the property, and what the amount of mortgage is, and by the expression in the policy making the insurance payable to the mortgagee.

[No. 263.]

Argued April 26, 27, 1888. Decided May 14, 1888.

IN ERROR to the Circuit Court of the United States for the District of Nebraska. On certificate of division in opinion to review a judgment for the defendants in an action on a policy of fire insurance. *Reversed.*

Statement by *Mr. Justice* **Gray**:

This was an action by Hosford and Gagnon on a policy of insurance, dated May 14, 1883, by which the Germania Fire Insurance Company and the Hanover Fire Insurance Company, severally and not jointly, and as if by separate policies, insured the plaintiffs, against loss by fire for a year from that date, each one half of the sum of $8,000, payable in sixty days after notice and proof of loss, upon their flour mill, elevator and machinery in the Town of Rulo and State of Nebraska; "special reference being had to assured application No. 20,157, which is hereby made a part of this policy and a warranty on the part of the assured;" "loss, if any, payable to Israel May, mortgagee, as his interest may appear." The policy contained these provisions:

"The application, survey, plan or description of the property herein insured shall be considered a part of the contract and a warranty by the assured; and any false representation by [400] the assured of the condition, situation or occupancy of the property, or any omission to make known every fact material to the risk, or any overvaluation, or any misrepresentation whatever, either in a written application or otherwise," shall render the policy void.

"If the interest of the assured in the property be any other than the entire, unconditional and sole ownership of the property for the use and benefit of the assured, or be incumbered by any lien, whether by deed of trust, mortgage or otherwise, or if the building insured stands on leased ground, it must be so represented to the Companies and so expressed in the written part of this policy; otherwise, this policy shall be void."

The application was of the same date as the policy, and was signed by the assured, and contained a great number of printed questions and written answers, and so much of it as is material to be stated was as follows:

"The applicant will answer particularly the following questions, and sign the same, as descriptive of the premises and forming a part of the contract of insurance and a warranty on his part:"

"What material is used for lubricating or oiling the bearings and machinery? Tallow, lard and machine oils.

"Will you agree to use only lard and tallow, or sperm and lard oils for lubricating? Lard and tallow, or lard and machine oils.

"Is the machinery regularly oiled, and by whom? Yes, by regular attendant.

"Will you agree to keep all the bearings and machinery properly supplied with oil? Yes."

"Is smoking or drinking of spirituous liquors allowed on the premises? No."

"Is there any incumbrance on the property? Yes.

"If mortgaged, state the amount. $3,000."

"The subscriber hereby covenants and agrees to and with the said Companies that the same is a just, full and true exposition of all the facts and circumstances in regard to the condition, situation, value and risks of the property to be insured, and said answers are considered the basis on which insurance is to be effected, and [401] the same is understood as incorporated in and forming a part and parcel of the policy; and further covenants and agrees that if the situation or circumstances affecting the risk shall be so altered or changed during the time of any policy of insurance which may be fixed upon the application, or any renewal of said policy, as to render the risk more hazardous, [he] will notify the officers of said Companies, or their general agent, forthwith of such alteration."

The case was tried by a jury, who returned a special verdict, finding the value of the property insured and its loss by fire on August 1, 1883, and so much of the rest of which as is material to be stated was as follows:

"The plaintiffs forbade smoking to go on in the mill, but smoking was done on the grinding floor." "One of them himself smoked upon and in the mill."

"At the time of the application, there was

due Israel May on his notes and mortgage on said premises the sum of $3,079.45." "There were taxes of the county and State on said premises for several years prior to the issue of the policy, which were delinquent and unpaid, and still remain unpaid, amounting to the sum of $329.40 on May 14, 1883."

On July 2, 1885, the circuit court gave judgment for the defendants. The plaintiffs brought the case to this court by writ of error, with a certificate of division of opinion between the circuit judge and the district judge upon the following questions:

"1. Whether the plaintiffs or the defendants, Insurance Companies, are entitled in law to recover judgment on said verdict and special findings of the jury returned in said cause.

"2. Whether the fact that delinquent taxes on the mill, to the amount of $329.40, were due and unpaid at the time the application for insurance on the property destroyed was made, and that fact was not disclosed by the applicants to the insurers, will defeat the plaintiffs' right to recover.

"3. Whether the fact that smoking was done in the mill, the proprietor of the mill being one that smoked, notwithstanding the plaintiffs had stated in their application for insurance that smoking was forbid therein, will defeat their right to recover, the fire that destroyed [402] the property not having originated from that cause."

Messrs. **T. M. Marquett** and **Isham Reavis**, for plaintiffs in error:

If a representation is true, it is all that is necessary.

Continental L. Ins. Co. v. *Rogers*, 8 West. Rep. 91, 119 Ill. 482; *Fitch* v. *American Popular L. Ins. Co.* 59 N. Y. 557.

If the insurer issues a policy without eliciting further information, he waives a fuller answer.

Phœnix L. Ins. Co. v. *Raddin*, 120 U. S. 190 (30:646); *Connecticut Mut. L. Ins. Co.* v. *Luchs*, 108 U. S. 498 (27:800); *Hall* v. *People's Mut. F. Ins. Co.* 6 Gray, 185; *Lorillard F. Ins. Co.* v. *McCulloch*, 21 Ohio St. 176; *American L. Ins. Co.* v. *Mahone*, 56 Miss. 180; *Carson* v. *Jersey City Ins. Co.* 43 N. J. L. 300; *S. C.* 44 N. J. L. 210; *Lebanon Mut. Ins. Co.* v. *Kepler*, 106 Pa. 28.

That one of the proprietors smoked will not defeat their right to recover.

Aurora F. Ins. Co. v. *Eddy*, 55 Ill. 213-219; *Ins. Co. of North America* v. *McDowell*, 50 Ill. 121; Wood, Fire Ins. 321, § 168.

The answer in reference to smoking should be regarded merely as a warranty *in præsenti*.

Aurora F. Ins. Co. v. *Eddy*, 55 Ill. 213; *O'Niel* v. *Buffalo F. Ins. Co.* 3 N. Y. 122; *Smith* v. *Mechanics & T. F. Ins. Co.* 32 N. Y. 399.

A policy should be construed most strongly against the insurer.

First. Nat. Bank v. *Hartford F. Ins. Co.* 95 U. S. 673 (24:563); *Moulor* v. *American L. Ins. Co.* 111 U. S. 335 (28:447); *Olson* v. *St. Paul F. & M. Ins. Co.* 35 Minn. 432.

The assured did not withhold any material fact within his knowledge.

First Nat. Bank v. *Hartford F. Ins. Co.* 95 U. S. 676 (24:564); *Continental L. Ins. Co.* v. *Rogers*, 8 West. Rep. 91, 119 Ill. 482; *Fitch* v. *American Popular L. Ins. Co.* 59 N. Y. 557.

Answers not material to the risk, that were honestly made in the belief that they were true, will not be any obstacle to recovery.

Continental L. Ins. Co. v. *Rogers*, 8 West. Rep. 88, 119 Ill. 474.

Courts construe policies of insurance so as to sustain them if possible, when the insured has not been guilty of bad faith or fraud.

Maxwell, Pl. & Pr. 144; *McMaster* v. *Ins. Co. of North America*, 55 N. Y. 222; Abb. Trial Ev. 483.

Messrs. **Samuel Shellabarger** and *J. M. Wilson*, for defendants in error:

When the representations of the insured are expressly referred to in the policy as forming a part of the contract, they will acquire the character of warranties, and invalidate the insurance, unless strictly complied with, whether they are or are not material to the risk assumed by the insurer.

Nicoll v. *American Ins. Co.* 3 Wood. & M. 529; *Williams* v. *New England Mut. F. Ins. Co.* 31 Me. 219; *Jennings* v. *Chenango County Mut. Ins. Co.* 2 Denio, 75; *Murdock* v. *Chenango County Mut. Ins. Co.* 2 N. Y. 210; *Witherell* v. *Maine Ins. Co.* 49 Me. 200; *Pierce* v. *Empire Ins. Co.* 62 Barb. 636.

The inquiry and answer are tantamount to an agreement that the matter inquired about is material, and its materiality is not, therefore, open to be tried by the jury.

Wilson v. *Conway F. Ins. Co.* 4 R. I. 141; *Chaffee* v. *Cattaraugus County Mut. Ins. Co.* 18 N. Y. 376; *Campbell* v. *New England Mut. L. Ins. Co.* 98 Mass. 381; *Miller* v. *Mutual Ben. L. Ins. Co.* 31 Iowa, 216; *LeRoy* v. *Market F. Ins. Co.* 39 N. Y. 90; *Price* v. *Phœnix Mut. L. Ins. Co.* 17 Minn. 497; *Blumer* v. *Phœnix Ins. Co.* 45 Wis. 622; *Jeffries* v. *Economical Mut. L. Ins. Co.* 89 U. S. 22 Wall. 47 (22:833); *Ætna L. Ins. Co.* v. *France*, 91 U. S. 512 (23:402).

The law does not forbid parties to a contract for life insurance to stipulate that its validity shall depend upon conditions or contingencies such as the court below decided were embodied in the policy in suit.

Jeffries v. *Economical Mut. L. Ins. Co. supra*; *Ætna L. Ins. Co.* v. *France*, 91 U. S. 510 (23:401); *Daniels* v. *Hudson River F. Ins. Co.* 12 Cush. 416.

Mr. Justice **Gray**, after stating the case, delivered the opinion of the court:

If this policy is valid, each of the defendants was severally liable for no more than the sum of $4,000, and interest thereon to the date of the judgment in the circuit court. The whole amount recoverable against either defendant in that court being less than $5,000, this court has no jurisdiction of the case, except by reason of the certificate of division of opinion. *Ex parte Phœnix Ins. Co.* 117 U. S. 367 [29:923]; *Dow* v. *Johnson*, 100 U. S. 158 [25:632]; *Williamsport Bank* v. *Knapp*, 119 U. S. 357 [30:446]. The first question certified is too general to be answered, because it undertakes to refer the whole case to the decision of this court. *Jewell* v. *Knight*, 123 U. S. 426 [31:190]. Nothing is open for consideration, therefore, but the second and third questions upon which the opinions of the judges of the circuit court were opposed.

The whole scope of that clause of the policy, which requires the interest of the assured, if

"other than the entire, unconditional and sole ownership of the property for the use and benefit of the assured," or if "incumbered by any lien, whether by deed of trust, mortgage or otherwise," to be so represented by the assured and so expressed in the policy, is to ascertain whether his interest comes within either of these two descriptions, and not to call for information as to the nature or amount of any incumbrances. It is therefore fully satisfied by the statements in the application that there is an incumbrance on the property, and what the amount of mortgage is, and by the expression in the policy making the insurance payable to a mortgagee. *Williams* v. *Roger Williams Ins. Co.* 107 Mass. 377.

[403]

By the terms of this policy, and of the application made part thereof, the answers to the questions in the application are doubtless warranties, to be strictly complied with. But this court is unanimously of opinion that, so far as regards either of the matters presented for its decision in the present case, these answers are direct, full and true.

The only questions put as to incumbrances are, first, the general one, "Is there any incumbrance on the property?" which is truly answered, "Yes;" and, second, the particular one, "If mortgaged, state the amount," in answer to which the assured states the principal sum due on the mortgage. The effect of omitting to include the additional sum due for less than half a year's interest is not presented by the certificate of division. The insurers having put no question as to the nature or the amount of incumbrances, otherwise than by mortgage, cannot object that no information was given upon that subject. *Phœnix L. Ins. Co.* v. *Raddin*, 120 U. S. 183 [30:644]. There was, therefore, no breach of warranty in not disclosing the lien for unpaid taxes, independently of the question whether such a lien was an incumbrance, within the meaning of this contract; and this case does not require a decision of that question.

As to smoking, the only question put in the application, and answered in the negative, is whether smoking is "allowed on the premises"—which looks only to the rule established upon the subject at the time of the application, and not to the question whether that rule may be kept or broken in the future. This appears by the language of the question, as well as by the circumstance that it is not, as other interrogatories as to existing precautions against fire are, followed up by compelling the assured to agree that they will continue to observe the same precautions. The jury having found that the assured forbade smoking in the mill, the mere fact that other persons, or even one of the assured, did afterwards smoke there, was not sufficient to avoid the policy.

The two cases cited by the defendants from the Illinois Reports contain no adjudication to the contrary. The point decided in each was that smoking by workmen in the mill did not avoid the policy, and the remark of the judge delivering the opinion, that in such a case the assured undertakes that he will not himself do the act, was *obiter dictum*. *Ins. Co. of North America* v. *McDowell*, 50 Ill. 120, 131; *Aurora F. Ins. Co.* v. *Eddy*, 55 Ill. 213, 219.

[404]

Judgment reversed, and case remanded to the Circuit Court, with directions to render judgment for the plaintiffs upon the special verdict.

JAMES W. HOSFORD ET AL., *Plffs. in Err.*, [404]
v.
HARTFORD FIRE INSURANCE COMPANY.

(See S. C. Reporter's ed. 404-405.)

Warranty in policy as to incumbrances—taxes.

1. Where an application for a policy of fire insurance contains the following questions and answers: "Is there a mortgage, trust deed, lien or incumbrance of any kind on the property? Yes. "Amount, and in whose favor? $3,000;" and the applicant covenants that the foregoing "is a just, full and true exposition of all the facts and circumstances in regard to the condition, situation, value, ownership, title, incumbrance of all kinds," of the property to be insured,—*Held*, that this warranty concerning incumbrances includes only incumbrances created by the act or with the consent of the assured, and not those created by law.

2. Therefore the policy was not avoided by the omission to disclose the fact that delinquent taxes on the premises for previous years were due and unpaid, although, by the statutes of the State, taxes are made a lien on the real estate taxed.

[No. 264.]

Argued April 26, 27, 1888. Decided May 14, 1888.

IN ERROR to the Circuit Court of the United States for the District of Nebraska. On certificate of division in opinion, to review a judgment for the defendant in an action on a policy of fire insurance. *Reversed.*

Statement by *Mr. Justice* **Gray:**

This case was tried, argued and decided at the same time with, and was substantially like, that of *Hosford* v. *Germania Ins. Co. supra*, except that no question as to smoking on the premises was presented, that the policy itself contained no provision on the subject of incumbrances, and that so much of the application as related to that subject was in this form:

"13. Incumbrance.—Is there a mortgage, trust deed, lien, or incumbrance of any kind, on property? Yes. Amount, and in whose favor? $3,000; I. May. What is the entire value of property incumbered? $21,000."

"And the said applicant hereby covenants and agrees to and with said Company that the foregoing and diagram annexed hereto is a just, full and true exposition of all the facts and circumstances in regard to the condition, situation, value, ownership, title, incumbrance of all kinds, insurance and hazard of the property to be insured; and the same is hereby made a condition of the insurance, a part of the contract and a continuing warranty on the part of assured, for term of policy, or any renewal thereof, of which this survey and application form a part." [405]

Messrs. **T. M. Marquett and Isham Reavis,** for plaintiffs in error.

(No counsel appeared for defendant in error.)

Mr. Justice **Gray** delivered the opinion of the court:

In this case, I am instructed by the majority of the court to announce its opinion that the warranty concerning incumbrances includes only incumbrances created by the act or with the consent of the assured, and not those created by the law; and therefore the policy was not avoided by the omission to disclose the fact that "delinquent taxes" on the premises for previous years were due and unpaid, although by the statutes of Nebraska taxes are made a lien on the real estate taxed.

Judgment reversed, and case remanded to the Circuit Court, with directions to render judgment for the plaintiffs upon the special verdict.

---

[45] PROVIDENCE AND STONINGTON STEAMSHIP COMPANY, *Plff. in Err.*,

v.

ALMIRA R. CLARE, Admrx. of CHARLES C. CLARE, Deceased.

(See S. C. Reporter's ed. 45-50.)

Action for death from negligence—facts—question for jury.

1. In an action to recover damages for the death of plaintiff's intestate from the negligence of defendant, resulting from the collision of two vessels of defendant, upon one of which the deceased was alleged to have been a passenger—*Held*, there being no evidence to sustain the allegation of the complaint that the intestate was drowned as a consequence of the collision, or as to what caused his death, the question as to whether deceased lost his life in consequence of the collision was at least one for the jury; and that the evidence was not sufficient to warrant the direction of a verdict for the plaintiff on that point.

[No. 265.]

Argued April 26, 1888. Decided May 14, 1888.

IN ERROR to the Circuit Court of the United States for the Southern District of New York, to review a judgment by direction of the court, for the plaintiff, in an action to recover damages for the death of plaintiff's intestate. *Reversed.*

Reported below in 22 Blatchf. 195, 20 Fed. Rep. 535.

The facts are stated by the court.

Mr. **Wheeler H. Peckham**, for plaintiff in error:

The court erred in directing a verdict for plaintiff below, and in refusing to allow defendant below to go to the jury.

McGrath v. *Hudson River R. R. Co.* 32 Barb. 147; *Ernst* v. *Hudson River R. R. Co.* 35 N. Y. 26; *Colegrove* v. *New York & N. H. R. R. Co.* 20 N. Y. 492; *Metropolitan R. Co.* v. *Jackson*, L. R. 3 App. Cas. 193; *Hart* v. *Hudson River Bridge Co.* 80 N. Y. 622; *Justice* v. *Lang*, 52 N. Y. 323; *Powell* v. *Powell*, 71 N. Y. 71.

The unimpeached testimony of an interested witness presents a question for the jury, and the court is not warranted in directing a verdict upon his testimony alone.

Gildersleeve v. *Landon*, 73 N. Y. 609; *Kavanagh* v. *Wilson*, 70 N. Y. 177.

(No counsel appeared for defendant in error.)

Mr. Justice **Blatchford** delivered the opinion of the court: [46]

This is an action at law, brought in the Supreme Court of the State of New York, by Almira R. Clare, as administratrix of the estate of Charles C. Clare, deceased, against the Providence and Stonington Steamship Company, a Rhode Island corporation, to recover the sum of $5,000, with interest from June 11, 1880, as statutory damages for the death of Charles C. Clare. The plaintiff is his widow, and he left four minor children, his heirs at law and next of kin.

The complaint alleges that the defendant was the owner of two steamboats, The Narragansett and The Stonington, running between Stonington, Connecticut, and New York City; that, on or about the 11th of June, 1880, the defendant received Clare on The Narragansett for the purpose of conveying him therein as a passenger from New York City to Stonington, for a reasonable compensation paid to it by Clare; that The Narragansett, under the management and direction of the defendant, having Clare on board as a passenger, and proceeding through the waters of Long Island Sound, met The Stonington proceeding on her way to New York City; that, by the negligence of the defendant, the two vessels came into collision, whereby The Narragansett was so injured that fire immediately broke out on her, and she sank within a few moments, and Clare without any neglect on his part, was drowned; that the collision occurred either in the State of New York or in the State of Connecticut; that section 9, of chapter 6, title 19, of the Laws of 1875 of the State of Connecticut, provides that all damages resulting in death, recovered in an action brought by [47] an executor or administrator, shall inure to the benefit of the husband or widow and heirs of the deceased person; and that section 1, chapter 78, of the Laws of 1877 of the State of Connecticut, provides that, in all actions by an executor or administrator, for injuries resulting in death from negligence, such executor or administrator may recover from the party legally in fault for such injuries just damages, not exceeding $5,000, to be distributed as provided in section 9 of chapter 6, title 19, of the Laws of 1875, but such action must be brought within one year from the neglect complained of. This suit was brought within the year.

By the Code of Civil Procedure of the State of New York, section 1902, it is provided as follows: "The executor or administrator of a decedent, who has left, him or her surviving, a husband, wife, or next of kin, may maintain an action to recover damages for a wrongful act, neglect or default, by which the decedent's death was caused, against a natural person who, or a corporation which, would have been liable to an action in favor of the decedent, by reason thereof, if death had not ensued." It is provided by section 1904 that in the case of a trial by jury, "the damages awarded to the plaintiff may be such a sum, not exceeding five thousand dollars, as the jury * * * deems to be a fair and just compensation for the pecuniary injuries, resulting from the decedent's death, to the person or persons for whose benefit the action is brought;" and that, "when final judgment for the plaintiff is rendered, the clerk must add to the sum so awarded interest

thereupon from the decedent's death, and include it in the judgment."

The action was removed by the defendant into the Circuit Court of the United States for the Southern District of New York, on the ground that the plaintiff was a citizen of New Jersey, and the defendant a citizen of Rhode Island. The answer, put in the circuit court, contains a denial in the prescribed form, covering the allegation of the complaint that the defendant received Clare on The Narragansett for the purpose of conveying him therein as a passenger from New York City to Stonington, for a reasonable compensation paid to it by Clare. [48] It also denies the negligence alleged, and denies all liability to the plaintiff. It also sets up, that it had, by proper proceedings in the District Court of the United States for the Southern District of New York, taken the benefit of the Statute of the United States for the limitation of the liability of ship owners, in respect to The Narragansett, by a transfer of its interest in her to a trustee appointed by that court.

At the trial before a jury a verdict was, by direction of the court, rendered for the sum of $5,000, on the 20th of April, 1885; the interest was, under the Statute of New York, computed by the clerk at the sum of $1,522.50; the plaintiff's costs were taxed at $78.25; and a judgment was rendered for the plaintiff for the damages, interest and costs, amounting in all to $6,600.75.

At the trial the plaintiff called as witnesses the master of The Narragansett, and the pilot and the engineer of The Stonington, for the purpose of showing negligence on the part of The Stonington. The plaintiff also called as a witness one Fisher, who testified as follows: "In June, 1880, I resided in Jersey City. I knew Charles C. Clare; he was a friend of mine. On the Sunday following the 11th of June, 1880, I went to Stonington and found the body of Charles C. Clare, and brought the same to Jersey City for burial. What first led me to go to Stonington was newspaper reports, and then information coming to me, that Mr. Clare had lost his life by this accident. I found his body in the lower part of a furniture establishment, which was being temporarily used as a morgue." The defendant then called as a witness a steamboat captain, and examined him on the general question as to whether The Stonington, at the speed at which she was running, was going at a moderate speed in a fog, under the requirement of Rule 21 of section 4233 of the Revised Statutes, which provides that "every steam vessel shall, when in a fog, go at a moderate speed." The defendant also called as a witness the bow watchman of the Stonington. After both sides had rested, the plaintiff moved for a direction to the jury to find a verdict for the plaintiff for $5,000. The defendant then moved that the court direct the jury to [49] find a verdict for the defendant, because there was no evidence that the intestate went on or in The Narragansett, the evidence being that he was dead, but there being no evidence as to how he died. The court then suggested to the counsel for the plaintiff that he had better prove, if he could, that the deceased was on The Narragansett. The plaintiff was then sworn as a witness, and testified that on the afternoon of June 11, 1880, she crossed over with her son Charles, by a ferryboat to New York, to take him to his father, and left him with his father on the New York side of the ferry bridge, and did not herself go outside of the ferry or to The Narragansett. The plaintiff then called the son Charles as a witness, who testified that, on that afternoon, he went with his father on board of The Narragansett, and went out on her, and was on her at the time of the collision; that his father was with him shortly before the collision, and that he did not see his father after the collision. The defendant then asked the court to direct the jury to find a verdict for the defendant, on the ground that there was no evidence in the case that the father and son went as passengers on the boat, or that they had bought a ticket, or that they had any room, or that there was any contract made between the parties; that there was no evidence that the intestate lost his life in consequence of the accident; that he was seen dead in Stonington; but that there was no evidence that any life was lost on The Narragansett, or that anything happened to the intestate. The court remarked that it thought that the evidence then in, in the case, was sufficient, and that it must deny the defendant's motion and grant the plaintiff's motion. The defendant then asked the court to direct a verdict for the defendant, on the ground that there was no evidence that the intestate lost his life by reason of the collision, or by the negligence of the defendant. The court denied the motion, and the defendant excepted. The defendant conceded that, if the plaintiff could recover at all, the damages were $5,000. The defendant then asked to go the jury on the questions (1) whether the plaintiff's intestate had lost his life by reason of the collision of the two vessels; and (2) whether the defendant or its servants had been guilty of any negligence in the navigation of The Stonington, [50] contributing to the collision. The court denied each of these requests, and to each denial the defendant excepted. The jury then returned a verdict for the plaintiff, by direction of the court, for $5,000. The defendant has brought a writ of error to review the judgment.

There has been no appearance or argument or brief in this court for the defendant in error, but the case has been orally argued and a brief submitted for the plaintiff in error. A citation was issued and duly served on the attorney for the plaintiff.

We think that the court erred at the trial, in refusing to grant the motion to direct a verdict for the defendant on the ground that there was no evidence that the plaintiff's intestate lost his life by reason of the collision or by the negligence of the defendant; and in refusing to grant the request of the defendant to go to the jury on the question whether the plaintiff's intestate had lost his life by reason of the collision. The only evidence of the death of the intestate was that of the witness Fisher, who testified that he saw the dead body of the intestate in Stonington, on the Sunday following the 11th of June, 1880, which was the 13th of June, 1880. There is no evidence to sustain the allegation of the complaint that the intestate was drowned as a consequence of the collision, or as to what caused his death, or as to how his body came to be found in Stonington.

The question as to whether the intestate lost

his life in consequence of the collision was, at least, one for the jury, and the evidence was not sufficient to warrant the direction of a verdict for the plaintiff on that point.

We express no opinion on the question of negligence in the navigation of The Stonington, contributing to the collision, or on the question of her rate of speed in the fog. Different testimony on these questions may be given on a new trial, from that which was given on the trial now under review. Nor do we express any opinion on the question of the sufficiency of the evidence to show, as alleged in the complaint, that the intestate was a passenger on The Narragansett, for a reasonable compensation paid by him to the defendant.

The judgment of the Circuit Court is reversed, and the case is remanded to that court with a direction to award a new trial.

---

[572] CHARLES E. MILLER ET AL., Exrs. of CHESTER A. ARTHUR, Late Collector of the PORT OF NEW YORK, *Plffs. in Err.*,

v.

FREDERICK VIETOR ET AL.

(See S. C. "*Arthur* v. *Vietor*," Reporter's ed. 572-578.)

Duties on wool—construction of Act—stockings—judgment partly wrong.

1. Section 2 of the Act of 1867, which prescribes a duty on "all manufactures of wool of every description, made wholly or in part of wool, not herein otherwise provided for," covers stockings composed of wool and cotton.
2. The words "not herein otherwise provided for," in an Act providing for customs duties, mean not otherwise provided for in the Act of which they are a part.
3. The stockings for which the duty was paid in this case, being manufactures made in part of wool, and dutiable as such by the Act of 1867, were liable to the duty imposed by section 2 of that Act, and were not otherwise provided for in that Act.
4. Where the verdict as directed, and the judgment thereon, are wrong as to part of the goods, judgment will be reversed and a new trial granted.

[No 268.]

Argued May 2, 3, 1888. Decided May 14, 1888.

IN ERROR to the Circuit Court of the United States for the Southern District of New York, to review a judgment for the plaintiffs, in an action to recover an alleged excess of duties. *Reversed.*

Reported below in 22 Blatchf. 39.

The facts are stated in the opinion.

Mr. **G. A. Jenks,** *Solicitor-Gen.*, for plaintiffs in error.

Mr. **Stephen G. Clarke,** for defendants in error:

When Congress has described an article so as to identify it by a given designation for revenue purposes, and this has been so long continued as to impress on it a particular designation as an article of import, then it must be treated as a distinct article, whether there be evidence that it is so known in commerce or not.

De Forest v. *Lawrence*, 54 U. S. 13 How. 274, 282 (14: 142, 146); *Homer* v. *Austin*, 68 U. S. 1 Wall. 486 (17: 688); *Reiche* v. *Smythe*, 80 U. S. 13 Wall. 162 (20: 566); *Movius* v. *Arthur*, 95 U. S. 144 (24: 420); *Bend* v. *Hoyt*, (38 U. S. 13 Pet. 263 (10: 154); *U. S.* v. *Ullman*, 4 Ben. 547; *Arthur* v. *Morrison*, 96 U. S. 108 (24: 764); *Arthur* v. *Lahey*, Id. 112 (24: 766); *Arthur* v. *Unkart*, Id. 118 (24: 768); *Arthur* v. *Zimmerman*, Id. 124 (24: 770); *Arthur* v. *Stephani*, Id. 125 (24: 771); *Arthur* v. *Davies*, Id. 135 (24: 810;) *Arthur* v. *Rheims*, Id. 143 (24: 813).

Mr. Justice **Blatchford** delivered the opinion of the court: [573]

This is an action at law, commenced in the Superior Court of the City of New York, by Frederick Vietor, George F. Vietor, Carl Vietor, Thomas Vietor, Jr., and Fritz Achelis, against Chester A. Arthur, Collector of the Port of New York, to recover an alleged excess of duties paid under protest on goods entered at the custom house in New York, from April, 1873, to November, 1873, prior to the enactment of the Revised Statutes.

The goods were hosiery. The appraiser returned the hosiery in some cases as "knit goods, wool hosiery, over 80, 50, 35, less 10 per cent;" in other cases as "worsted knit goods," etc. The collector liquidated the duties on the hosiery at the rate of 35 per cent *ad valorem* and 50 cents a pound, less a deduction of 10 per cent. The plaintiffs protested in writing against the liquidation, "because said merchandise, being merino hosiery, and similar articles made on frames, not otherwise provided [574] for, is only liable to duty under the 22d section of the Tariff Act of March 2, 1861, and the 13th section of the Tariff Act of July 16, 1862, at the rate of 35 per centum *ad valorem*, less 10 per cent under the 2d section of the Act of June 6, 1872, as manufactures wholly or in part of wool, or hair of the alpaca, goat, or other like animal."

All of the goods involved contained from 10 to 20 per cent of either wool or worsted, the other component material being cotton. The wool or worsted formed an appreciable portion of the value of the goods. There is nothing in the case to show the value of, or the amount of duties assessed on, the wool and cotton goods, as distinguished from the worsted and cotton goods.

The plaintiffs offered evidence tending to show that the articles imported by them, similar to samples introduced by them in evidence, were stockings, were worn by men, women, and children, and were made on frames. The plaintiffs claimed that the goods were dutiable under section 22 of the Act of March 2, 1861, chap. 68, 12 Stat. at L. 191, under a provision imposing a duty of 30 per cent on "caps, gloves, leggins, mits, socks, stockings, wove shirts and drawers, and all similar articles made on frames, of whatever material composed, worn by men, women, or children, and not otherwise provided for;" and section 13 of the Act of July 14, 1862, chap. 163, 12 Stat. at L. 556, which imposed, from and after the 1st of August, 1862, an additional duty of 5 per cent *ad valorem* on "caps, gloves, leggins, mits, socks, stockings, wove shirts and drawers, and all similar articles made on frames, of whatever material composed, worn by men, women, and children, and not otherwise provided for;" and the provision of section 2 of

the Act of June 6, 1872, chap. 315, 17 Stat. at L. 231, which enacts that after the first of August, 1872, in lieu of the duties imposed by law upon the articles enumerated in that section, there should be paid 90 per cent of the several rates of duty then imposed by law upon such articles severally, "it being the intent of this section to reduce existing duties on said articles ten per centum of such duties, that is to say: * * * On all wools, hair of the alpaca, goat, and other animals, and all manufactures
575] wholly or in part of wool or hair of the alpaca, and other like animals, except as hereinafter provided."

The duties levied by the collector, and claimed by the defendant at the trial to have been the proper rate of duty, were assessed under section 2 of the Act of March 2, 1867, chap. 197, 14 Stat. at L. 561, which imposed the following duties: "On woolen cloths, woolen shawls, and all manufactures of wool of every description made wholly or in part of wool, not herein otherwise provided for, fifty cents per pound, and, in addition thereto, thirty-five per centum *ad valorem*. On flannels, blankets, hats of wool, knit goods, balmorals, woolen and worsted yarns, and all manufactures of every description composed wholly or in part of worsted, the hair of the alpaca, goat, or other like animals, except such as are composed in part of wool, not otherwise provided for, valued at not exceeding forty cents per pound, twenty cents per pound; valued at above forty cents per pound and not exceeding sixty cents per pound, thirty cents per pound; valued at above sixty cents per pound and not exceeding eighty cents per pound, forty cents per pound; valued at above eighty cents per pound, fifty cents per pound; and, in addition thereto, upon all the above named articles, thirty-five per centum *ad valorem*."

At the trial, after the plaintiffs had rested, the defendant offered evidence tending to show that knit goods are textile fabrics composed of a single thread united in a series of loops, corresponding to the old-fashioned hand-knitting process, and that the plaintiffs' importations were so made; and, further, that all fabrics made on frames are knit goods. The defendant then rested. The plaintiffs then offered evidence tending to show that the term "knit goods" used in trade and commerce has no different or other meaning than its meaning among men in general; that there are knit goods known to trade and commerce which were not made on frames, but which were made by hand, and that there are other goods, as caps, gloves, leggins, mits, socks, stockings, and drawers, made in whole or in part of worsted, worn by men, women, and children, which are made on a frame and knit, and which are also knit by hand; that, while the result of
576] knitting by hand, and of the manufacture on a frame of a fabric consisting of a single thread, is the production of a textile fabric composed of a series of connecting loops which are alike in each case, yet the processes by which they are produced are dissimilar; that the result of the process of manufacturing upon frames and knitting by hand is the same, although the two processes are dissimilar; also, that there are no textile fabrics made on frames which are known in trade and commerce, except fabrics composed of cotton, wool or worsted, silk, linen, or a mixture of these materials. Both parties then rested.

The plaintiffs then moved the court to direct the jury to find a verdict in their favor, which motion was granted. To such ruling the defendant excepted. The jury found a verdict for the plaintiffs. The amount was, by agreement of the parties, adjusted at the custom house, and a judgment was entered for the plaintiffs, including costs, for $1,897.96; to review which the defendant has brought a writ of error.

We think that it was error in the court to have directed a verdict for the plaintiffs. The Act of 1867 is entitled "An Act to Provide Increased Revenue from Imported Wool, and for Other Purposes." Section 1 of the Act relates to duties on "unmanufactured wool, hair of the alpaca, goat, and other like animals, imported from foreign countries." Section 2 provides for the following duty: "On woolen cloths, woolen shawls, and all manufactures of wool of every description made wholly or in part of wool, not herein otherwise provided for, fifty cents per pound, and, in addition thereto, thirty-five per centum *ad valorem*." This clause clearly covers stockings such as some of those in the present case, composed of wool and cotton, because they were made in part of wool.

The next question is whether they were "herein otherwise provided for," that is, otherwise provided for in that Act of 1867. We have recently held, in the case of *Miller* v. *Butterfield*, 125 U. S. 70, 76 [31:643, 645] that the words "not otherwise herein provided for," in an Act providing for customs duties, mean not otherwise provided for in the Act of which they are a part. The words in the present case are "not herein otherwise provided for," which are identical in meaning. Section 2 of the Act [577]
of 1867 goes on to provide for duties on many manufactured articles made wholly or in part of wool; namely, "women's and children's dress goods and real or imitation Italian cloths, composed wholly or in part of wool;" "clothing ready made, and wearing apparel of every description, and balmoral skirts and skirting, and goods of similar description or used for like purposes, composed wholly or in part of wool;" "webbings, beltings," etc., made of wool, or of which wool is a component material; and carpets of various kinds and carpetings of wool.

The clause of section 2 of the Act of 1867, above quoted, which covers "knit goods," expressly excepts "such as are composed in part of wool;" and the clause relating to duties on "wearing apparel of every description * * * composed wholly or in part of wool," made up or manufactured wholly or in part by the manufacturer, expressly excepts "knit goods." It is stated in the bill of exceptions that the stockings in question were made on frames, and that all fabrics made on frames are knit goods.

According to the bill of exceptions, some of the goods in question here were properly assessed by the collector, under the Act of 1867, at the rate of 50 cents a pound and 35 per cent *ad valorem*, less 10 per cent, and it was improper to direct a verdict for the plaintiffs as to those goods. After the verdict was rendered, on the 10th of December, 1883, and before judgment,

the defendant made a motion for a new trial, the decision on which is reported in 22 Blatchf. 39. The motion was denied, on the ground that the articles in question, as stockings made on frames, were specifically made dutiable by that name in the Acts of 1861 and 1862, and had been dutiable *eo nomine*, by different enactments, since 1842; and that the general language of the Act of 1867 did not affect the specific description in the Acts of 1861 and 1862. Particular reference was made in the decision to the opinion of this court in *Victor* v. *Arthur*, 104 U. S. 498 [26:633]. The goods in that case were imported after the enactment of the Revised Statutes, on the 22d of June, 1874, and were stockings, some of them wholly of worsted [578] and others of cotton and worsted, cotton being the material of chief value, and they were intended to be worn by men, women, and children, and were made on frames, and were also knit goods. The collector had exacted upon them a duty at the rate of 90 per cent of 50 cents a pound and 35 per cent *ad valorem*, as knit goods, under schedule L of section 2504 of the Revised Statutes. The importer claimed that they were dutiable as stockings made on frames, worn by men, women, or children, under schedule M of the same section. Judgment having been entered for the defendant, this court reversed it, on the ground that, as between the descriptions in the two schedules in the same section of the Revised Statutes, the goods must be considered as having been provided for under the designation of stockings made on frames, worn by men, women, or children, in schedule M, and as not being liable to the higher duty prescribed by schedule L, because, although schedule L was broad enough to comprehend them, yet, as schedule M covered them by a specific designation, and they had been dutiable as stockings made on frames, *eo nomine*, since 1842, and by four different enactments, they fell within schedule M. That decision does not apply to the present case, for here the only question is whether the stockings, so far as they have wool in them, being manufactures made in part of wool, and dutiable as such by the Act of 1867, were otherwise provided for in that Act. It is clear that they were not.

Inasmuch as the verdict directed covered the stockings which contained wool and cotton, and the judgment is a unit, and the direction of a verdict was wrong as to those goods, *the judgment is reversed, and the case is remanded to the Circuit Court with a direction to grant a new trial.*

---

[507] WILLIAM H. ROBERTSON, Late Collector of the PORT OF NEW YORK, *Plff. in Err.*,

v.

EMILIE SICHEL, an Infant, by JOSEPH SICHEL, Her Guardian *ad litem*.

(See S. C. Reporter's ed. 507-517.)

Liability of government for acts of agents—liability of officer for wrongs of his subordinate officers—liability of Collector.

1. The government is not responsible for the misfeasances or wrongs, or negligences or omissions of duty, of the subordinate officers or agents employed in the public service.

2. A public officer is not responsible for the misfeasances or positive wrongs, or for the nonfeasances or negligences or omissions of duty, of the subagent or servants or other persons, properly employed by or under him, in the discharge of his official duties.

3. A collector of customs is not personally responsible for the negligence of his subordinates in the custom house department; in order to charge him in such case, he must have been guilty of personal neglect, misfeasance or wrong.

[No. 269.]

Argued May 1, 1888. Decided May 14, 1888.

IN ERROR to the Circuit Court of the United States for the Southern District of New York, to review a judgment for the plaintiff, in an action against the Collector of Customs to recover damages for the loss of the contents of a trunk, destroyed by fire after its arrival by ship. *Reversed.*

The facts are stated in the opinion.

Mr. **G. A. Jenks,** *Solicitor-Gen.*, for plaintiff in error.

Mr. **Edward Jacobs,** for defendant in error:

A collector is liable for the illegal detention of property.

Hall v. *Warren*, 2 McLean, 332.

The wrongful taker of property, when called upon to surrender it to the rightful owner or pay the value, cannot defend himself from judgment by showing his inability to deliver, through death or destruction.

Caldwell v. *Fenwick*, 2 Dana, 333; *Haile* v. *Hill*, 13 Mo. 612; *Gibbs* v. *Bartlett*, 2 Watts & S. 34; *Austin* v. *Jones*, Gilmer (Va.), 341; *Scott* v. *Hughes*, 9 B. Mon. 104; *Garrett* v. *Wood*, 3 Kan. 231; *Berthold* v. *Fox*, 13 Minn. 501.

The unreasonable delay in removal forms another breach of duty.

Russell Mfg. Co. v. *New Haven Steamboat Co.* 50 N. Y. 121.

A refusal to charge a proposition which, however true it may be, is, so far as applied to the case, a mere abstraction is not error.

Priebe v. *Kellogg Bridge Co.* 77 N. Y. 597.

Where a proposition has been substantially charged, a refusal to charge in the language of counsel is not error.

Allen v. *Stout*, 51 N. Y. 668; *Miller* v. *Barber*, 66 N. Y. 558.

A prayer for instructions, consisting of a number of propositions presented as a whole, may be refused if any of them should not be given.

Johnston v. *Jones*, 66 U. S. 1 Black, 210 (17:117); *Harvey* v. *Tyler*, 69 U. S. 2 Wall. 328 (17:871); *Lincoln* v. *Claflin*, 74 U. S. 7 Wall. 132 (19:106); *Beaver* v. *Taylor*, 93 U. S. 46 (23:797); *Worthington* v. *Mason*, 101 U. S. 149 (25:848); *U. S.* v. *Hough*, 103 U. S. 71 (26:305).

Mr. Justice **Blatchford** delivered the opinion of the court:

This is an action at law, brought in the City [508] Court of the City of New York, by Emilie Sichel, an infant, by Joseph Sichel, her guardian *ad litem*, against William H. Robertson, Collector of Customs for the Port and collection district of New York, and removed by the defendant into the Circuit Court of the United States for the Southern District of New York.

The object of the suit was to recover dam-

ages for the loss of the contents of a trunk belonging to the plaintiff, who was a passenger by the steamship Egypt of the Inman line, from Liverpool, and arrived at New York, at the pier of the ship, on the 31st of January, 1883. She was sixteen years of age and was a first cabin passenger. She made a baggage declaration, under oath, which stated that she had two trunks and two bags, containing "wearing apparel in actual use and personal effects not merchandise." She declared "nothing new or dutiable." Her baggage was examined on the dock, and one trunk was detained by the customs officers, who gave her a receipt therefor, signed by an inspector, which stated that the inspector had sent the one trunk, for appraisement, to the public store, under a baggage permit. She was directed by the officers to call the next day at the public store, to receive the trunk. This trunk contained her personal effects, which cost her $400. The only thing in the trunk not wholly intended for her own use was ten pounds of chocolate, valued at about $2.50, part of which she ate, and she intended to eat the balance in company with some of her young friends. This was her first visit to America. She was a native of Germany, and at the time of her arrival was unfamiliar with our language and customs. She did not know and could not understand the nature and effect of the baggage declaration which she was asked to sign, and it was not explained to her. In the trunk, with her clothing and wearing apparel, were some paper boxes containing some brass ornamental jewelry on cards, given to her abroad, of the value in all of about one dollar, some of which she had worn, some old lace curtains, six tablecloths and twelve napkins, a gift from her mother, the ten pounds of chocolate, and three corsets, one of which she had [509] worn. On the next day, the usual order was made, on an application signed by the plaintiff, for an appraisement of the contents of the trunk. The plaintiff demanded the trunk at the public store, but did not receive it, because it had been destroyed by fire, on the pier of the ship, on the night of January 31, 1883. It was proved on the trial that, on the morning after the arrival of the ship, the deputy collector issued an order to the clerk in the Collector's department at the custom house for the appraisal of the trunk, and that there could be no appraisal without a permit from the Collector.

At the close of the plaintiff's case, the defendant asked the court to direct a verdict for him, on the ground that, the action being one for personal negligence, the plaintiff had not brought home to the Collector personally any connection with the trunk at the time it was destroyed, and that, if any negligence was to be imputed to the subordinate officers of the customs, such negligence could not be imputed to the Collector. The court refused to grant the motion, and the defendant excepted.

Evidence was then introduced on the part of the defendant tending to show that the inspector on the dock who examined the trunk discovered what, in the exercise of his discretion, he determined to be dutiable articles; that he reported to his superior officer that he thought the trunk contained dutiable articles and that officer told him to see what else he could find; that he found other dutiable articles; that he attempted to find an appraiser to appraise and assess duties upon those articles, but did not find one; that he reported to the staff officer having charge of the passengers and their baggage from that steamer, and under his advice marked the trunk for the public store, to be examined by the proper examiner and have the duties assessed, under a section of the regulations for the government of officers of the customs under the superintendence and direction of the surveyor of the Port of New York, which was admitted in evidence, and was as follows: "In the absence of the entry clerks or appraiser, dutiable articles taken from passengers' baggage will be sent by the inspector as soon as possible to the public store, and the passenger will be furnished by the inspector [510] with the usual baggage certificate;" that, the trunk having been thus marked for the public store, and a receipt given to the plaintiff, it was put into the charge of the discharging officers of the vessel; that the inspectors were allowed to send goods to the public store for appraisement, only through a custom house cartman; that the discharging officer who received the plaintiff's trunk did not send it to the storehouse because there was no cartman on the pier to take it away, and none came to do so, though an effort was made to procure one; that the trunk remained on the pier, under his custody, and was totally consumed by fire on the night of the 31st of January, the officers who were there being driven away by the flames; and that the fire occurred between 2 and 3 o'clock A. M. of the day following that of the arrival of the steamer.

It also appeared in evidence that, under article 431 of the customs regulations, it was the duty of the Collector, on the arrival of any steamer of a regular line from a foreign port, to detail an experienced entry clerk, who, with a similar clerk to be designated by the naval officer and an assistant appraiser or examiner to be detailed by the appraiser, should, together with the inspector on board, examine all the passengers' baggage, place the dutiable value upon the same, and, if dutiable articles were found, appraise the same and assess the duty thereon. It also appeared that all those officers were on the dock on that day.

The following regulations were then put in evidence:

"The Laws and Regulations for the Government of Officers of Customs under the Superintendence of Surveyors of Ports. 1877."

"Article 104. Whenever any trunk or package brought by a passenger as baggage contains articles subject to duty and the value thereof exceeds $500, or if the quantity or variety of the dutiable articles is such that a proper examination, classification, or appraisement thereof cannot be made at the vessel, the trunk or package will be sent to the public store for appraisement."

"Article 117. In the absence of the entry clerk or appraiser, dutiable articles taken from [511] passengers' baggage will be sent by the inspector, as soon as possible, to the appraiser's store and the passenger will be furnished by the inspector with the usual 'baggage certificate,' which will be in the following form:

32-174

"Inspector's certificate of goods sent to public store under baggage permit.

"PORT OF———, ——— —, 18—,
On board ship.

"I have sent to public store under 'baggage permit' the following articles said to belong to ———.

"(Describe the articles.) ——— ———,
Inspector."

By the government's report in this case the value of the property in Miss Sichel's trunk was alleged to be $100 only, while the plaintiff did not claim the value to be over $400. Peterson, the government inspector, did not make a written report of the case to the government until about two months after the arrival of the steamer. He did this at the request of the surveyor, and it was no part of his duty to make it as requested. The same inspector Peterson had signed and issued the certificate on the baggage declaration. There was an appraiser on the pier in question some time on that day. The trunk in question was the only seizure or detention of passengers' baggage made on that dock on the day in question.

The defendant himself, being put upon the stand and duly sworn, testified that he was the Collector of the Port of New York; that he had in the neighborhood of twelve hundred subordinates under him; that, approximately, the average annual importations into the Port of New York, passed through the custom house, were of the value of $500,000,000; that he knew nothing about the trunk imported by Emilie Sichel by The Egypt on January 31, at the time of its importation; that he was not on the dock at the time; that it was no part of his duty to pay any attention to the actual arrival of the passengers' baggage, or passing it [512] through the custom house, or ordering it to the public store, or examining it to see if there were any dutiable goods, or to have anything to do with it; that as a matter of fact he had nothing to do with it; and that the first time his attention was called to the matter of this trunk was long after the fire, some time in September, 1883.

The evidence being closed, the defendant moved the court to direct a verdict in his favor upon the same grounds on which the motion was made at the close of the plaintiff's case, that is to say, that there was no evidence in the case to connect the defendant with the destruction of the trunk; that in the case of a public officer, the doctrine of law *respondeat superior* did not apply; and that, before there could be any recovery from the public officer it must be shown that he was personally responsible himself, and that the negligence was his own act. The court refused to grant this motion, and the defendant excepted.

The defendant then requested the court to charge as follows:

"1. That a public officer is not responsible for the negligence of his subordinates.

"2. That the defendant is liable only for the neglect of some duty devolved upon him personally and not for the neglect of duty of any other person.

"3. That unless the jury find that the loss of this trunk was the direct result of some personal carelessness or negligence on the part of the defendant there can be no recovery.

"4. That it is not sufficient to show that the loss may have been the result of negligence on the part of the Collector. It is necessary to show that it was.

"5. That the jury cannot find a verdict in favor of the plaintiff if they find that the loss of this trunk was due to the personal negligence or violation of statutes or regulations on the part of the customs officers other than the defendant personally.

"6. That the inspector who examined plaintiff's trunk, having found therein what he believed to be dutiable articles, was obliged to turn said trunk over to others of the officers of the customs for appraisement and assessment of duty, and until such appraisement and as- [513] sessment of duty, and the payment of the duty as assessed, the plaintiff was not entitled to the possession of the trunk.

"7. That the defendant is not responsible in this action for the withholding the plaintiff's trunk and its contents.

"8. That if the customs officials at the vessel misinterpreted their duty, and did an act which was in law a trespass or conversion, the defendant is not responsible, he not having been present and not having been a party to the wrong interpretation of duty acted on by the customs officers at the vessel.

"9. That the defendant is not responsible for the trespasses, conversion, or other faults of his subordinates committed by them even in the line of their duty, unless he was personally a party to the same.

"10. That the law, as provided in section 2652 of the Revised Statutes, made it the duty of the customs officers at the vessel by which the plaintiff's trunk was imported, to execute and carry into effect all instructions of the Secretary of the Treasury relative to the execution of the laws.

"11. That it appears by the evidence in this case that one of the instructions by the Secretary for the guidance of the officers at the vessel in which the plaintiff's trunk came was a provision that, whenever any trunk or package brought by a passenger as baggage contains articles subject to duty, the value whereof exceeds five hundred dollars, or, if the quantity or variety of dutiable articles is such that the proper classification and examination for appraisement thereof cannot be made, the trunk or package will be sent to the public store for appraisement.

"12. That this instruction of the Secretary had and has the force of law for the facts in this case.

"13. That the instructions devolved upon the customs officials at the vessel a discretion to determine whether the quantity and variety of the dutiable articles was such that the proper classification and examination for appraisement thereof could not be made at the vessel, and, if they determined it could not be, to send the trunk and its contents to the public store for appraisement.

"14. That in the exercise of this discretion [514] those officers, and the Collector as their superior, are not responsible for any error of judgment in making the determination whether the quantity or variety of the dutiable articles was such, prior to sending the trunk to the public store.

"15. That the officers at the vessel, and the

Collector as their superior, can, if at all, only be held responsible for bad faith in the exercise of the discretion thus devolved upon them by the regulation established by the Secretary, under the law."

The court charged the jury that if one of the subordinate officers of the customs, in the course of the performance of his duty, did an absolute wrong to the plaintiff, such as to take her trunk from her and keep it from her when she wanted it and was by law entitled to it, the defendant would be liable. The defendant excepted to this charge. The court gave further instructions, which bore upon the matters set forth in the defendant's requests to charge, but which, in the view we take of the case, it is not important to notice. The bill of exceptions states that the court did not comply with the defendant's requests to charge further than as appears by the charge as stated, and that the defendant excepted to the refusal to charge as to each request separately, so far as the court did refuse.

The jury found a verdict for the plaintiff for $459. The court ordered that a certificate of probable cause be entered, and on the verdict, with costs added, a judgment was entered for the plaintiff for $502.96, to review which the defendant has brought a writ of error.

We are of opinion that there was error in the charge of the court, and that the defendant was not liable for the wrong, if any, committed by his subordinates, on the facts of this [515] case. There is nothing in the evidence to connect the defendant personally with any such wrong. No evidence was given that the officers in question were not competent, or were not properly selected for their respective positions. The subordinate who was guilty of the wrong, if any, would undoubtedly be liable personally for the tort, but to permit a recovery against the Collector, on the facts of this case, would be to establish a principle which would paralyze the public service. Competent persons could not be found to fill positions of the kind, if they knew they would be held liable for all the torts and wrongs committed by a large body of subordinates, in the discharge of duties which it would be utterly impossible for the superior officer to discharge in person.

This principle is well established by authority. It is not affected by the fact that a statutory action is given to an importer, to recover back, in certain cases, an excess of duties paid under protest; nor by the fact that a superior officer may be held liable for unlawful fees exacted by his subordinate, where lawful fees are prescribed by statute, and where such fees are given by law to the superior, or for the act of a deputy performed in the ordinary line of his official duty as prescribed by law. The government itself is not responsible for the misfeasances, or wrongs, or negligences, or omissions of duty of the subordinate officers or agents employed in the public service; for it does not undertake to guarantee to any person the fidelity of any of the officers or agents whom it employs; since that would involve it, in all its operations, in endless embarrassments, and difficulties, and losses, which would be subversive of the public interests. Story, Ag. § 319, *Seymour* v. *Van Slyck*, 8 Wend. 403, 422; *U. S.* v. *Kirkpatrick*, 22 U. S. 9 Wheat. 720, 735 [6:199,203]; *Gibbons* v. *U. S.* 75 U. S. 8 Wall. 269 [19:453]; *Whiteside* v. *U. S.* 93 U. S. 247, 257 [23:882,885]; *Hart* v. *U. S.* 95 U. S. 316, 318 [24:479,480]; *Moffat* v *U. S.* 112 U. S. 24, 31 [28:623,625]; *Schmals* v. *U. S.* 4 Ct. Cl. 142.

The head of a department, or other superior functionary, is not in a different position. A public officer or agent is not responsible for the misfeasances or positive wrongs, or for the nonfeasances, or negligences, or omissions of duty, of the subagents or servants or other persons [516] properly employed by or under him, in the discharge of his official duties. Story, Ag. § 319.

In *Keenan* v. *Southworth*, 110 Mass. 474, it was held that a postmaster was not liable for the loss of a letter, occasioned by the negligence or wrongful conduct of his clerk. The court said: "The law is well settled, in England and America, that the postmaster-general, the deputy postmasters, and their assistants and clerks, appointed and sworn as required by law, are public officers, each of whom is responsible for his own negligence only, and not for that of any of the others, although selected by him and subject to his orders." The court cited, to sustain this view, *Lane* v. *Cotton*, 1 Ld. Raym. 646; *S. C.* 12 Mod. 472; *Whitfield* v. *LeDespencer*, Cowp. 754; *Dunlop* v. *Monroe*, 11 U. S. 7 Cranch, 242 [3:329]; *Schroyer* v. *Lynch*, 8 Watts, 453; *Bishop* v. *Williamson*, 11 Me. 495; *Hutchins* v. *Brackett*, 22 N. H. 252.

To the same purport are *Bailey* v. *Mayor of N. Y.* 3 Hill, 531; *Conwell* v. *Voorhees*, 13 Ohio, 523, 543; Story, Bail. §§ 462, 463; 1 Bell Com. 5th ed. 468; 2 Kent Com. 4th ed. 610, 611.

The very question here involved came before the Circuit Court of the United States for the Southern District of New York, in the case of *Brissac* v. *Lawrence*, 2 Blatchf. 121, in June, 1850. The defendant was the Collector of the Port of New York. Imported goods belonging to the plaintiff had been deposited in a custom house warehouse, and were either lost or mislaid there, or were delivered to some person not entitled to them. At the trial it was sought to show carelessness on the part of the defendant, as the head of the custom house department, in the manner in which the books of the warehouse were kept, and also that the bookkeeper was a person of intemperate habits and unfit for the situation. On the other hand, it was proved that the books were kept in conformity with the mode usually adopted at the time for keeping books of that kind; that the intemperate book-keeper had been discharged; and that, during a period of nineteen months, out of two hundred thousand packages of goods which had been received at the warehouse in [517] question, only two packages had been lost. *Mr. Justice* Nelson, in charging the jury, submitted to them the question whether the collector had been guilty of personal negligence in respect to the goods. In the course of the charge, the court said: "The collector is not personally responsible for the negligence of his subordinates in the custom house department, and, therefore, he is not responsible for the negligence of persons employed in the warehouse department. * * * In order to charge the defendant with the loss, it is necessary that

the plaintiffs should satisfy you, by affirmative and reasonable testimony, that the collector was personally guilty of negligence in the discharge of his duty, either by misdeed or by omission. * * * This is a suit against the collector, who did not have charge of the goods; and, in order to render him liable, you must find him to have been guilty of personal neglect, misfeasance, or wrong. * * * In view of the fact that the Collector of New York has charge of all the business from which two thirds of the entire revenue of the United States is collected, and has thousands of subordinates, and upon the evidence that only one package out of every one hundred thousand which passed through the hands of those subordinates has been lost, it is strange that this case has been so urgently pressed, with the idea that upon any principle of equity, much less of law, there could be any liability on the part of the collector." The jury found a verdict for the defendant. See, also, *U. S.* v. *Brodhead*, 3 Law Rep. 95; Whart. Ag. § 550.

The judgment of the Circuit Court is reversed, and the case is remanded to that court with a direction to grant a new trial.

---

[409] JOB BARNARD, Admr. of ROBERT H. RYAN, Deceased, *Appt.*,

v.

DISTRICT OF COLUMBIA.

(See S. C. Reporter's ed. 409-411.)

Compensation for extra work—written contract.

1. Where, in a contract to do certain work in improving a street in Washington, the prices for paving and excavation were fixed at so much a yard, the contractor is not authorized to charge for extra work for stone or rock found in the excavation, the contract not being limited to work done in earth free from stone or rock.
2. All contracts of this character are required by law to be in writing; and the law forbids the allowance of any extra compensation for work done under a contract.
3. The board of public works could not, by a mere entry in its journal, make a new contract or alter one previously made.

[No. 272.]

Argued May 2, 1888. Decided May 14, 1888.

APPEAL from a judgment of the Court of Claims, in favor of defendant, in an action to recover for extra work in excavating stone or rock, under a contract for the improvement of a street in the City of Washington. *Affirmed.*

Reported below in 20 Ct. Cl. 257.

The facts appear in the opinion.

Mr. **I. H. Ford**, for appellant:

Money voluntarily paid, with a full knowledge of all the facts and circumstances under which it was demanded, cannot be recovered back. To recover money so paid, the party seeking to recover it must prove fraud, duress, or mistake of fact.

Lamborn v. *Dickinson County*, 97 U. S. 185 (24: 928); *Meech* v. *Buffalo*, 29 N. Y. 198, 212, 213; *Elliott* v. *Swartwout*, 35 U. S. 10 Pet. 153, 154 (9: 379); *Mutual Life Ins. Co.* v. *Wager*, 27 Barb. 354; 2 Greenl. Ev. § 123; Dill. Mun. Corp. § 477; 4 Wait, Act. & Def. 483, 487; *Boston & S. Glass Co.* v. *Boston*, 4 Met. 181, 188; *Mayo* v. *Cincinnati*, 1 Ohio St. 268; *Awalt* v. *Eulaw Building Asso.* 34 Md. 435.

Messrs. A. H. Garland, Atty-Gen., and **Robert A. Howard**, *Asst. Atty-Gen.*, for appellee

Mr. Justice **Field** delivered the opinion of the court: [410]

On the 23d day of July, 1872, Robert H. Ryan, since deceased, entered into a contract with the Board of Public Works of the District of Columbia to do certain work for the improvement of New Jersey Avenue in the City of Washington, from B Street south to the Potomac River. The different kinds of work required were stated, and the prices for each specified, among which were "grading 30 cents per cubic yard," and "excavations and refilling, 40 cents per cubic yard, to be measured in excavating only." It is conceded that Ryan performed the work pursuant to the contract, and has been paid the amount agreed upon. The present claim is for extra work on the avenue "in grading or excavating stone or rock," for which it is contended there is no provision in the contract. The board had entered in its journal before the contract was made the following: "Chief Engineer was notified that the following price was established for rock excavation, viz.: in ditches for sewers, etc., $1.50 per cubic yard; cutting down streets and the like, $1.00 per cubic yard. Auditor and contract clerk notified;" and Ryan contended that he was therefore entitled for all rock excavations to one dollar a yard instead of the price specified in the contract for grading and excavating, the difference being $4,060.

To this contention there are two answers. In the first place, the "grading" and "excavation" specified in the contract are not limited to work done in sand or gravel or earth free from stone or rock. It might reasonably be expected that more or less stone or rock would be found [411] in the progress of the work, and the price was evidently fixed upon its supposed average character.

In the second place, the Act of Congress of February 21, 1871, "to provide a government for the District of Columbia," in force at the time, required that all contracts by the board should be in writing, be signed by the parties making the same, and a copy thereof filed in the office of the secretary of the District; and it forbade the allowance of any extra compensation for work done under a contract. 16 Stat. at L. 423, chap. 62, §§ 15, 37.

The entry in the journal of the board was no part of the contract with the claimant, nor could it in any respect control the construction or limit the effect of such contract. The board could not in that way either make a new contract or alter the one previously made, so as to bind the District. *Barnes* v. *Dist. of Columbia*, 22 Ct. Cl. 366.

Judgment affirmed.

JOSHUA HENDY, *Appt.*, [370]

v.

GOLDEN STATE AND MINERS' IRON WORKS ET AL.

(See S. C. Reporter's ed. 370-376.)

Letters patent, infringement of—defense—combination—claim.

In a suit for the infringement of letters patent No. 140, 250, granted to James D. Cusenbary and

James A. Mars, for an improvement in ore stamp feeders,—*Held:*

(*a*) Merely putting rollers under an article, so as to make it movable, when, without the rollers, it would not be movable, does not involve the inventive faculty and is not patentable.

(*b*) This defense is one which can be availed of without setting it up in an answer.

(*c*) There is no patentable combination between the rollers which make the timbers movable and the feeding cylinder I, mounted upon the timbers. The union of parts is merely an aggregation.

(*d*) The feeding cylinder I, having been described in the specification as having chambers or depressions, the claim cannot be construed to cover a cylinder with a smooth surface, not formed into chambers.

[No. 278.]

Submitted May 3, 1888. Decided May 14, 1888.

APPEAL from a decree of the Circuit Court of the United States for the District of California, dismissing a suit for the infringement of letters patent. *Affirmed.*

Reported below in 8 Sawy. 468.

The facts are fully stated in the opinion.

Messrs. **J. H. Miller** and **J. P. Langhorne,** for appellant:

The term "useful," when applied to inventions, means the opposite of hurtful, injurious, or frivolous. The degree of utility is immaterial.

Lowell v. *Lewis,* 1 Mason, 186; *Hoffheins* v. *Brandt,* 3 Fish. Pat. Cas. 218; *Cox* v. *Griggs,* 1 Biss. 362; *Tilghman* v. *Werk,* 1 Bond, 511; *Westlake* v. *Cartter,* 6 Fish. Pat. Cas. 519; *Many* v. *Jagger.* 1 Blatchf. 372; *Wilbur* v. *Beecher,* 2 Blatchf. 137; *Shaw* v. *Colwell Lead Co.* 11 Fed. Rep. 711; *Kneass* v. *Schuylkill Bank,* 4 Wash. 9; *Stanley* v. *Hewitt,* 17 Frank Jr. 2d Series, 165; *Wintermute* v. *Redington,* 1 Fish. Pat. Cas. 239.

The appellees have used the invention and hence they are estopped to deny its utility.

Simpson v. *Mad River R. R. Co.* 6 McLean, 603; *Vance* v. *Campbell,* 1 Fish. Pat. Cas. 483; *McComb* v. *Ernest,* 1 Woods, 195; *Kearney* v. *Lehigh Valley R. R. Co.* 32 Fed. Rep. 320.

Mr. **M. A. Wheaton,** for appellees:

The invention was an abandoned experiment.

Whiteley v. *Swayne,* 74 U. S. 7 Wall. 685 (19: 199); *Howe* v. *Underwood,* 1 Fish. Pat. Cas. 160; *Swift* v. *Whisen,* 3 Fish. Pat. Cas. 360.

A patent taken out by two parties, as joint inventors, for an invention which was made solely by one of the parties, is void, and *vice versa.*

Walk. Pat. §§ 50, 51; *Barrett* v. *Hall,* 1 Mason, 447; *S. C.* 1 Robb, Pat. Cas. 234, 235; *Stearns* v. *Barrett,* 1 Mason, 153; *S. C.* 1 Robb, Pat. Cas. 115, 116, 117; *Slemmer's Appeal,* 58 Pa. 155; *Ransom* v. *Mayor of N. Y.* 1 Fish. Pat. Cas. 253.

The claim does not cover any patentable invention.

Pennsylvania R. R. Co. v. *Locomotive Engine Safety Truck Co.* 110 U. S. 490 (28: 222); *Bussey* v. *Excelsior Mfg. Co.* Id. 131 (28: 95).

Mr. Justice **Blatchford** delivered the opinion of the court:

This is a suit in equity, brought by Joshua Hendy against the Golden State and Miners' Iron Works, a corporation, and six individual defendants in the Circuit Court of the United States for the District of California, for the infringement of letters patent No. 140,250, granted June 24, 1878, to James D. Cusenbary and James A. Mars, for an "improvement in ore stamp feeders." The specification, claims, and drawings of the patent are as follows:

"Our invention relates to improvements in that class of ore feeders for quartz mills in which a pawl and ratchet are employed to operate the feeder automatically by the drop of the stamp. Our improvements consist, first, in mounting a feed cylinder upon a movable frame or truck, so that it can be readily shifted from place to place when it is desired to repair the mill; and, lastly, of an improved arrangement for operating the pawl rod by the drop of the stamp without the use of springs. In order to more fully illustrate and explain our invention, reference is had to the accompanying drawings, forming a part of this specification, in which Figure 1 is a vertical section; Fig. 2 is a back view; Fig. 3 is a transverse section. A represents the frame of a stamp mill; B is the stamp; C is the stamp stem, with its tappet D; F is the cam shaft, and G the cam which lifts the stamp, all of which are arranged in the ordinary manner of constructing a stamp battery. H H are the foundation timbers upon which the feeding cylinder is mounted. These timbers are mounted upon rollers, so that the cylinder and frame can be moved about as desired. The cylinder I is made of cast metal, and has its outer surface formed into chambers or depressions, J J, which are separated from each other by longitudinal partitions, K. The cylinder and its carriage, when in working position, are placed below the hopper L, so that the ore from the hopper will fall into the chambers upon an inclined apron, M, which directs it beneath the stamp. This feeding cylinder, being made of cast metal, will not wear out like the endless belts heretofore used in this class of machines, and, as it turns upon journals, like any common roller or cylinder, it cannot become clogged, as the endless belt is liable to do. To one end of the cylinder or ratchet wheel N is secured, and this ratchet wheel is operated by, a pawl bar, C, to revolve the cylinder. In order to operate the pawl bar from the tappet, a horizontal shaft, *p*, has its opposite ends supported in boxes, which are secured to the sides of the [372] upright timbers of the frame, so that the shaft will pass across directly in front of the tappet, transversely to the movement of the stamp stem. A fixed arm, *q*, extends backwards from the shaft *p*, so that its extremity will terminate below the tappet, in position to receive a blow from it when the stamp falls. Another fixed arm, *r*, extends forward from the shaft directly over the ratchet wheel, and to the extremity of this arm the upper end of the pawl bar *o* is attached by means of a trunnion block, *t*. This bar extends down to the middle of the periphery of the ratchet wheel, and has one or more upward projecting teeth on its lower end, which serve to engage with the teeth of the ratchet when the pawl is lifted by the rock shaft, and thus rotate the feeding cylinder. It will therefore be evident that, at each drop of the stamp, the tappet will strike the arm *q* and carry it downward, thus giving the shaft *p* a rocking motion, the weight of the pawl and its arm *r* serving to rotate the shaft in an opposite direction, thus feeding the

[371]

ore automatically when it is needed. When there is a sufficient quantity of ore beneath the stamp the drop will not be sufficient to operate the cylinder; but when the quantity of ore beneath the stamp is reduced the drop is greater, and consequently the tappet strikes the arm *q* and operates the cylinder.

"Having thus described our invention, what we claim and desire to secure by letters patent is:

"1. The feeding cylinder I, mounted upon the movable timbers H H, substantially as and for the purpose above described.

"2. The rock shaft *p*, with its fixed arms *q r*, in combination with the pawl bar *o*, ratchet wheel N, and feeding cylinder I, when arranged to be operated by the tappet D, substantially as and for the purpose described."

[373]

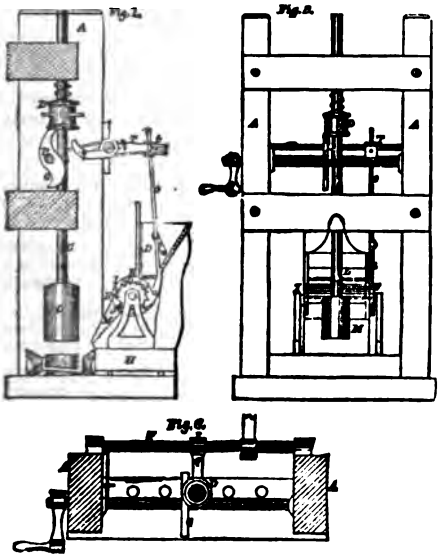

[374] The answer denies infringement, and sets up two patents on the question of novelty, and denies the utility of the invention. After replication, proofs were taken on both sides, and the circuit court, on a hearing, dismissed the bill.

Infringement is alleged of only the first claim, namely, "The feeding cylinder I, mounted upon the movable timbers H H, substantially as and for the purpose above described." The specification states, in regard to the subject of the first claim, that the improvement consists "in mounting a feed cylinder upon a movable frame or truck, so that it can be readily shifted from place to place when it is desired to repair the mill." The specification speaks of the timbers H H as being the foundation timbers upon which the feeding cylinder is mounted, and it says that those timbers "are mounted upon rollers, so that the cylinder and frame can be moved about as desired." Therefore, "the movable timbers H H" of the claim are timbers made movable by being mounted upon rollers. The specification also states that "the cylinder I is made of cast metal, and has its outer surface formed into chambers or depressions, J J, which are separated from each other by longitudinal partitions, K."

It is contended, in defense, that claim 1 of the patent is really a claim only for making the timbers movable, by mounting them upon rollers, so as to be able to move the cylinder and frame about as desired, and that this required no exercise of any inventive faculty. This seems to be the purport of the invention, as stated in the specification. It is the movable character of the frame on which the feed cylinder is mounted, so that the cylinder and frame may be readily shifted from place to place, when repairs are desired, that is designated as the invention. When the mill is in operation, the movable feature is not brought into play. [375] It is only when the mill is out of operation that the movable feature is to be used. The first claim does not appear to cover the functions or operation of the feeding cylinder I, as a part of the mill when in operation; and, interpreting it by its own language as well as by that of the description in the specification, it covers only the mounting upon rollers of the timbers which carry the feeding cylinder. Merely putting rollers under an article, so as to make it movable, when, without the rollers, it would not be movable, does not involve the inventive faculty, and is not patentable. *Atlantic Works* v. *Brady*, 107 U. S. 192, 200 [27: 438, 441]; *Thompson* v. *Boisselier*, 114 U. S. 1, 13 [29: 76, 80], and cases there cited; *Yale Lock Mfg. Co.* v. *Greenleaf*, 117 U. S. 554, 559 [29: 952, 954]; *Clark Pomace Holder Co.* v. *Ferguson*, 119 U. S. 335, 338 [30: 406, 407] and cases there cited.

This defense is one which can be availed of without setting it up in an answer. *Dunbar* v. *Myers*, 94 U. S. 187 [24: 34]; *Slawson* v. *Grand Street R. R. Co.* 107 U. S. 649 [29: 576]; *Mahn* v. *Harwood*, 112 U. S. 354, 358 [28: 667].

Moreover, there is no patentable combination between the rollers which make the timbers movable and the feeding cylinder I, mounted upon the timbers. The union of parts is merely an aggregation. The feeding cylinder, mounted upon timbers which have rollers, operates no differently from what it does when mounted upon timbers which have no rollers. *Hailes* v. *Van Wormer*, 87 U. S. 20 Wall. 353, 368 [22: 241, 248]; *Reckendorfer* v. *Faber*, 92 U. S. 347, 357 [23: 719, 723]; *Pickering* v. *McCullough*, 104 U. S. 310, 318 [26: 749, 751]; *Bussey* v. *Excelsior Mfg. Co.* 110 U. S. 131, 146 [28: 95, 100]. There is nothing patentable in the aggregation.

The defendants' machine has a smooth cylinder, and not a cylinder with chambers or depressions. The specification of the patent describes the cylinder I as having its outer surface formed into chambers or depressions, separated from each other by longitudinal partitions. The cylinder of claim 1 is "the feeding cylinder I," and, to be such cylinder, must be a cylinder substantially as described, and it is described specifically as having chambers or depressions. The claim cannot be construed [376] to cover a cylinder with a smooth surface not formed into chambers. *Fay* v. *Cordesman*, 109 U. S. 408, 420, 421 [27: 979, 984]; *Sargent* v. *Hall Safe & Lock Co.* 114 U.S. 63, 86 [29: 67, 76]; *Shepard* v. *Carrigan*, 116 U. S. 593, 597, 598 [29: 723, 724]; *White* v. *Dunbar*, 119 U. S. 47,

51, 52 [30: 303–305]; *Crawford* v. *Heysinger*, 123 U. S. 589, 606, 607 [31: 269, 274].

The decree of the Circuit Court is affirmed.

482] J. D. HEGLER, *Plff. in Err.*,

v.

GEORGE D. FAULKNER ET AL.

(See S. C. Reporter's ed. 482–483.)

Jurisdiction of circuit court.

1. In a suit to recover the possession of lands, brought in a state court, where there was no evidence of any petition or order for the removal of the case into the Circuit Court of the United States, nor any statement anywhere in the record of the citizenship of the parties,—*Held*, that the circuit court had no jurisdiction of the case, and that its judgment and verdict therein must be set aside.

[No. 283.]

Submitted May 3, 1888. Decided May 14, 1888.

IN ERROR to the Circuit Court of the United States for the District of Nebraska, to review a judgment in favor of defendants in a suit to recover possession of lands in Nebraska, originally brought in the State Court. *Reversed.*

The facts are stated in the opinion.

Messrs. **J. W. Denver** and **J. H. Broady**, for plaintiff in error:

The certificate of acknowledgment is *prima facie* proof of a deed, and to impeach it the evidence should be extremely clear.

Morris v. *Sargent*, 18 Iowa, 90; *Van Orman* v. *McGregor*, 23 Iowa, 300; Best on Presumptions of Law and Fact, 64, 65.

Messrs. **T. M. Marquett** and **Isham Reavis**, for defendants in error.

483] *Mr. Justice* **Miller** delivered the opinion of the court:

This is a writ of error to the Circuit Court of the United States for the District of Nebraska.

There is in the record presented here a transcript showing that the action was first brought October 4, 1878, in the District Court of Richardson County, in the State of Nebraska, in which the original petition or declaration was filed. The suit was to recover the possession of a tract of land situated in that county containing 320 acres, and for rents and profits alleged to be of the value of $2,500. The defendants entered their appearance on May 6, 1879, and leave was granted them to answer in thirty days. The plaintiff was ruled to reply in fifty days, and the cause continued. An answer was filed May 17, 1879, and this appears to have been done in the Circuit Court of the United States for the District of Nebraska, in which all the subsequent proceedings in the progress of the cause were taken.

There is no evidence of any petition or order for the removal of the case into this latter court from the state court sitting in the County of Richardson, nor is there any statement anywhere of the citizenship of the parties. It appears that a trial was thereafter had and a verdict rendered for the defendants. The only attempt made to show any jurisdiction in the circuit court, in which that trial took place, is a short stipulation between the parties, made in that court December 8, 1882, by which it was agreed that the amount in controversy in the action exceeded $5,000.

A judgment in favor of the defendants was entered upon this verdict, to which the present writ of error is directed. It is very clear that this verdict and judgment must be set aside, because the circuit court had no jurisdiction of the case.

The judgment of the court below is reversed, and the case remanded for further proceedings.

CHARLES L. EASTON, *Appt.*, [532]

v.

GERMAN-AMERICAN BANK.

(See S. C. Reporter's ed. 532–539.)

Pledge of property—right of pledgee—trustee—purchase by trustee—by creditors—deed of trust—payment.

1. Where personal property is pledged, the pledgee acquires the legal title and the possession. If it remain in the apparent possession of the pledgor, he holds as agent of the pledgee.
2. By virtue of the pledge, the pledgee has the right by law, on the default of the pledgor, to sell the property pledged in satisfaction of the pledgor's obligation.
3. As in that transaction the pledgee is the vendor, he cannot also be the vendee. He is in the position of a trustee to sell, and is forbidden to purchase for his own use at his own sale.
4. The same principle applies with a like result where real estate is conveyed by a debtor directly to a creditor, as security for the payment of an obligation, with a power to sell in case of default. There the creditor is also a trustee to sell, and cannot purchase the property at his own sale for his own use.
5. At a sale made under the direction and control of a trustee, creditors, who hold the obligation secured by the deed of trust, may become the purchasers. In reference to such sale they occupy no position, towards the debtor, of trust or confidence.
6. The relation of a creditor, secured by a deed of trust, to a sale under a power given to a stranger, as trustee, does not differ from that of a mortgagee of real estate sold under judicial proceedings for foreclosure by a decree of a court of equity.
7. Where the whole amount bid by a person at the sale, which was the consideration for the conveyance to him by the trustee, was credited by the creditors for whom he was acting as agent, as a credit of cash upon the overdue obligation of the debtors, this was, in fact and in law, a payment to the use and benefit of the debtors.

[No. 291.]

Argued May 4, 1888. Decided May 14, 1888.

APPEAL from a decree of the Circuit Court of the United States for the Southern District of New York, dismissing a suit to hold the German-American Bank accountable for the proceeds of certain collaterals held by it. *Affirmed.*

Reported below in 28 Blatchf. 271.

Statement by *Mr. Justice* **Matthews**:

On April 14, 1875, the firm of Bowen Brothers, of Chicago, borrowed of the German-American Bank of New York the sum of $27,500, for which they gave their promissory notes, payable, respectively, in two, three, and four months from date. As collateral security [533]

for the payment of the loan they deposited with the Bank forty bonds executed by themselves, payable to bearer five years from date, with interest semi-annually, of the denomination of $1,000 each, dated April 1, 1878, the payment of which was secured by a deed of trust made by the individual members of the firm to George W Smith, conveying to him certain real estate therein described, situated in Cook County, Illinois. By the terms of the written agreement, under which the collateral security was deposited, the Bank was authorized, on nonpayments of the notes at maturity, to sell the bonds either at the board of brokers, at public auction, or at private sale, and without notice, and to apply the proceeds of the sale to the payment thereof. These collateral bonds thus deposited were part of a series of one hundred of like tenor and amount, all secured by the deed of trust to Smith. That deed of trust provided that, in case of default in the payment of the bonds or interest, it should be lawful for the trustee, on the application of the holder of any of the bonds, to sell the real estate or any part thereof, and all the right and equity of redemption of the grantors therein, at public vendue, to the highest bidder, for cash, and, upon making such sale, to execute and deliver a deed of conveyance in fee of the premises sold. In January, 1877, the trustee in the trust deed, upon the application of the State Savings Institution of Chicago, the holder of thirty-two of the bonds upon which there had been a default for nonpayment of interest, sold the real estate in strict conformity with the terms of the power in the trust deed, after due notice, at public auction, to Wirt Dexter, for the sum of $50,000, and conveyed the premises to the purchaser in pursuance of the same. Dexter, in making the bid and purchase of the premises at public auction, acted as agent for the holders of all the bonds, including the German-American Bank, he having been authorized by them to bid for and purchase the property for them jointly. Thereafter he conveyed an undivided forty-one hundredths of the property purchased by him, and in a partition suit that interest in the real estate was set off, to the German-American Bank in severalty. Dexter paid no money in bidding in the property except the actual costs of the sale, but the trustee credited upon the bonds held by the German-American Bank forty-one hundredths of the amount of the bid, being $472 upon each bond; and the whole sum, amounting to $18,880, was indorsed as a payment on the three notes. The German-American Bank continued to hold title to the real estate conveyed to it by Dexter until February 8, 1881, when, in consideration of $56,000, the Bank conveyed the same in fee to John C. Dore, and thereafter, in February, 1882, also delivered to Dore the forty bonds then in its possession with the credits indorsed thereon. These bonds were delivered to Dore in accordance with an agreement dated February 19, 1881, which recited that Dore "desires to obtain possession and ownership of said forty bonds in connection with the purchase of said property from said Bank."

[534]

In the meantime, the members of the firm of Bowen Brothers, on November 10, 1877, were adjudged bankrupts on a petition filed on June 2 of that year; and during 1878 they severally received their final discharges in bankruptcy. On April 21, 1880, Robert E. Jenkins, assignee in bankruptcy of the Bowen Brothers, by an order of the court, sold all his right, title, interest, and claim as assignee, and all right, title, interest, and claim of the bankrupts in and to the land described in the trust deed, to Carl F. Hermann for the sum of $840, and afterwards conveyed the same to him by deed dated and acknowledged May 13, 1880. The assignee also on April 21, 1880, sold to the appellant, Charles L. Easton, for the sum of $5, the claim against the German-American Bank of New York "for interest in all collaterals pledged with said Bank by said bankrupts or either of them;" and by a deed dated May 15, 1880, assigned the same by the same description to him.

It is not denied that John C. Dore purchased the land from the German-American Bank with knowledge of the previous conveyances by the assignee in bankruptcy to Hermann and to Charles L. Easton.

[535]

On February 24, 1881, James H. Easton, a brother of the appellant, having succeeded to the title of Hermann to the land in question, filed a bill in equity in the Circuit Court of the United States for the Northern District of Illinois, against the German-American Bank, to which, by an amended and supplemental bill, John C. Dore was also made a defendant, in which were set forth substantially the facts stated in the present bill of complaint, and praying for an account against the German-American Bank, and that the complainant might be permitted to redeem the land on payment of what might be found due on the original loan to Bowen Brothers. It is admitted that this suit was brought in the name of James H. Easton, for the benefit of Josiah H. Helmer, the latter having previously acquired the title of Hermann and conveyed it to James H. Easton in order to enable the suit to be brought in the Circuit Court of the United States. Helmer himself had previously brought an action of ejectment to recover possession of the land. The ejectment suit was abandoned when the bill in equity was filed; and pending the bill, in September, 1883, before the commencement of the present suit, a settlement was made between Helmer and Dore, whereby, in consideration of a certain sum paid by Dore, both Helmer and James H. Easton, the latter at Helmer's request, by separate deeds released all their right, title, and interest in and to the lands in question to one Berger for the benefit of Dore.

On January 27, 1884, the present bill in equity was filed, wherein Charles L. Easton, claiming title by virtue of the deed of assignment made to him by Jenkins as assignee in bankruptcy of the Bowen Brothers, seeks to hold the German-American Bank accountable to him for the sum of $56,000, as the proceeds of the collaterals held by it realized from the sale of the real estate conveyed to the Bank by Dexter, and a decree for any sum found due to it by reason thereof after payment from the said proceeds of the original indebtedness of Bowen Brothers to the Bank.

The case was heard in the circuit court upon the pleadings and proofs disclosing the state of facts already recited, when a decree was rendered dismissing the bill for want of equity.

[536]

From this decree the present appeal has been taken.

Messrs. **J. M. Wilson, Chas. L. Easton** and *Charles P. Crosby*, for appellant:

The relation between a pledgor and pledgee is that of trustee and *cestui que trust*.

Perry, Tr. § 427; *Richardson* v. *Mann*, 30 La. Ann. 1060; *Wheeler* v. *Newbould*, 16 N. Y. 398.

The right of property does not pass to the pledgee, but remains with the pledgor subject to the lien of the former, or until the sale of the collaterals, pursuant to the terms of the pledge.

Jones, Pledges, § 552; 2 Kent, Com. 581; *Wheeler* v. *Newbould*, *supra*.

The pledgee cannot acquire absolute ownership against the pledgor by purchase of the property, although the sale is regular and publicly made.

Jones, Pledges, § 659; *Slee* v. *Manhattan Co.* 1 Paige, 48; *Hoyt* v. *Martense*, 16 N. Y. 281; *Middlesex Bank* v. *Minot*, 4 Met. 325; *Bryan* v. *Baldwin*, 52 N. Y. 235; *Torrey* v. *Bank of Orleans*, 9 Paige, 663; *Michoud* v. *Girod*, 45 U. S. 4 How. 503 (11: 1076).

Notwithstanding the foreclosure sale, the relation of pledgor and pledgee continues, so that the pledgee may be compelled to account to the pledgor.

White Mountains R. R. Co. v. *Bay State Iron Co.* 50 N. H. 57; *Slee* v. *Manhattan Co.* 1 Paige, 48; *Brown* v. *Tyler*, 8 Gray, 135; *Walker* v. *Carleton*, 97 Ill. 582; Jones, Pledges, § 659; *Dalton* v. *Smith*, 86 N. Y. 182.

Mr. **Edward Salomon**, for appellee:

The trustee's sale cut off all equity of redemption of Bowen Brothers regarding their notes as well as their bonds.

Slee v. *Manhattan Co.* 1 Paige, 48, 78.

A mortgagee could not, at common law, become the purchaser on a sale made by himself under the power, because he could not execute a deed to himself.

Jackson v. *Colden*, 4 Cow. 266; *Arnot* v. *McClure*, 4 Denio, 41, 44; *Mowry* v. *Sanborn*, 68 N. Y 153, 160.

No party can be permitted to purchase an interest where he has a duty to perform that is inconsistent with the character of a purchaser.

Torrey v. *Bank of Orleans*, 9 Paige, 662.

Mr. Justice **Matthews** delivered the opinion of the court:

The right of the complainant to the relief prayed for is based upon the contention that the German-American Bank originally held the bonds secured by the deed of trust as a pledge given by way of security for the repayment of the loan to Bowen Brothers; that it has never sold that pledge, in pursuance of the terms of the agreement between the parties, and as required by law; that the land itself, the title to which was conveyed by Bowen Brothers to Smith in trust, was a mere incident to the pledge and a part of it; that notwithstanding the form of a sale under the trust deed by the trustee to Dexter, there was no sale in fact, and in law the conveyance by Dexter to the Bank operated only to convey the title to the Bank in the same capacity in which it held the bonds as collateral, that is, as trustee for the debtors; that the subsequent sale by the Bank to Dore was the first effective conveyance of an absolute title, but was made by the Bank in its capacity as trustee for the Bowens; and that as such the complainant, having succeeded to the Bowens' rights, is entitled to require the Bank to account for its proceeds.

Where personal property is pledged, the pledgee acquires the legal title and the possession. In some cases, it is true, it may remain in the apparent possession of the pledgor, but, if so, it can be only where the pledgor holds as agent of the pledgee. By virtue of the pledge, the pledgee has the right by law, on the default of the pledgor, to sell the property pledged in satisfaction of the pledgor's obligation. As in that transaction the pledgee is the vendor, he [537] cannot also be the vendee. In reference to the pledge and to the pledgor, he occupies a fiduciary relation, by virtue of which it becomes his duty to exercise his right of sale for the benefit of the pledgor. He is in the position of a trustee to sell, and is by a familiar maxim of equity forbidden to purchase for his own use at his own sale.

The same principle applies with a like result where real estate is conveyed by a debtor directly to a creditor as security for the payment of an obligation, with a power to sell in case of default. There the creditor is also a trustee to sell, and cannot purchase the property at his own sale for his own use.

In the present case, the bonds of the Bowen Brothers, secured by the deed of trust, were pledged to the German-American Bank as security for the repayment of the loan made to the Bowen Brothers, but those bonds have not in fact been sold, unless the transfer of them by the Bank to Dore be considered a sale. It was not such, however, in point of fact or of law; nothing was paid for them, and they were delivered to Dore merely as muniments of title in connection with his purchase of the real estate. At that time they were of no value, for they were merely the personal obligations of the Bowen Brothers, from which they had been released by the discharge in bankruptcy. No suit could have been maintained upon them as against the only obligors by whose discharge in bankruptcy they had lost their character as well as their value as property.

The equity of the complainant, therefore, if he have any, must be considered as transferred from the bonds themselves, viewed as instruments and obligations, to the money which had been received on account of them by virtue of the sale of the real estate by the Bank to Dore. Whether the complainant can now assert any equitable interest in that money depends in the first place on the nature of the title which the Bank acquired by the conveyance to it from Dexter; and whether the principles of a pledge, and of a trust arising thereon, apply to the real estate conveyed by the Bowens to Smith as a trustee to secure the payment of the bonds.

It is very plain, we think, that these princi- [538] ples do not apply. The land in question was conveyed by the debtor, not directly to the creditor, but to a stranger. That stranger, by virtue of the conveyance, held the legal title in trust for the purpose of sale according to the power contained in it. That power he executed in strict accordance with its terms A default

has been made by the debtor, and at the request of a part of the creditors he was required to sell the property at public auction to the highest bidder, without limit or condition, in order that the proceeds of the sale might be applied to the payment of the debt, to secure which the land had been conveyed in trust. The sale was made under the direction and control of the trustee, but, as the creditors who held the obligations of the debtors were not themselves trustees, there was nothing, either at law or in equity, to prevent their being bidders and becoming buyers at the trustee's sale. In reference to that sale they occupied no position, towards the debtor, of trust or confidence. They were charged in respect to it with no duty whatever. They had an interest in it that the property should produce enough to satisfy the debts which it had been given to secure. Beyond that they had neither interest nor duty, and in their own interest the creditors had a right to bid so as to prevent the property from being sacrificed at the sale below its value, in order that it might be made to produce the largest amount towards payment of the debt.

The relation of a creditor, secured by such a deed of trust, to a sale made under a power given to a stranger as trustee, does not differ from that of a mortgagee of real estate sold under judicial proceedings for foreclosure by a decree of a court of equity. At such a sale nothing is more common than for the mortgagee to become the purchaser; and it is as beneficial to the debtor as to himself that he should be permitted to enhance the competition at such a sale in order to protect his own interests. In that respect, his own interest coincides with that of his debtor, as it is for their mutual benefit that the property should not be sacrificed so as to leave any part of the debt unpaid.

It is argued, however, that in the present [539] instance the sale to Dexter was a sale only in form, and not in fact, because no money passed. This, however, is an error, because the whole amount bid by Dexter at the sale, which was the consideration for the conveyance to him by the trustee, was at once credited by the principal creditors, for whom he was acting as agent, as a credit of cash upon the overdue obligations of the debtor. In fact and in law it was a payment of money to the use and benefit of the debtors in pursuance of their authority.

In addition to this, there is another ground which equally supports the decree below. As already recited, the assignee in bankruptcy, in pursuance of an order of the court, sold and conveyed to Hermann all the interest which he as assignee and the Bowens as bankrupts had in and to the real estate in question; and by subsequent conveyances whatever title, if any, thereby passed has become vested in Dore for his use. All that was conveyed by the assignee to Charles L. Easton, the complainant in this suit, was the interest of the assignee and of the bankrupts "in all collaterals pledged with said Bank by said bankrupts or either of them." If this can be considered as the conveyance of any interest in the real estate, it was ineffectual and void, because that interest had been previously conveyed by the same grantor to Hermann. If it is limited to the bonds of the Bowen Brothers secured by the deed of trust, it is equally ineffective, because there was nothing to convey. These bonds were the mere personal obligations of the bankrupts themselves, in which neither they nor their assignee had any right of property, and which had become extinguished as obligations in the hands of any one by the bankrupts' certificate of discharge.

For these reasons the decree of the Circuit Court is affirmed.

UNITED STATES, *Appt.*, [428]

v.

KATE D. McLAUGHLIN, and Same, as EXTX. of CHARLES McLAUGHLIN, Deceased, ET AL.

(See S. C. Reporter's ed. 428-457.)

Mexican grants—when valid—suit to vacate—kinds of—floating grants—method of location—patents.

*1. The boundaries of the Mexican grant, called the Moquelamos grant, considered,—the same being described as "bounded on the east by the adjacent sierra:" *Held*, as the result of the evidence adduced, that its eastern limit was at the point where the foot hills of the sierra begin to rise above the plain, near the range line between ranges 7 and 8.

2. Mexican grants were of three kinds: (1) grants by specific boundaries, where the donee is entitled to the entire tract; (2) grants of quantity within a larger tract described by outside boundaries, where the donee is entitled to the quantity specified and no more; (3) grants of a certain place or rancho by name, where the donee is entitled to the whole place or rancho. The second kind, grants of quantity in a larger tract, are, properly, floats, and do not attach to any specific land until located by authority of the Government. The Moquelamos grant was of this kind.

3. In the case of floating grants, as above described, it was only the quantity actually granted which was reserved during the examination of the validity of the grant; the remainder was at the disposal of the Government as part of the public domain. If within the boundaries of a land grant made in aid of a railroad, such land grant would take effect, except as to the quantity of land, or float actually granted in the Mexican grant. If that quantity lying together was left to satisfy the grant, the railroad company would be entitled to patents for the odd sections of the remainder.

4. In the case of a floating Mexican grant, the Government retained the right of locating the quantity granted in such part of the larger tract described as it saw fit; and the Government of the United States succeeded to the same right; hence, the Government might dispose of any specific tracts within the exterior limits of the grant, leaving a sufficient quantity to satisfy the float.

5. Patents issued to the Central Pacific Railroad Company under its land grant, for any sections lying easterly of range 6 east within the outside boundaries of the Moquelamos grant, are valid,—there being enough land lying west of range 7 to satisfy the floating grant of eleven square leagues.

6. The bill in this case was filed by the attorney-general on behalf of the United States to vacate a patent granted to the Central Pacific Railroad Company for lands lying east of range 6 within the claimed limits of the Moquelamos grant—the ground of relief being, that all the lands within the exterior limits of that grant were reserved lands; *Held*, that the lands in question were not reserved lands, and that the bill should be dismissed.

[No. 1027.]

Argued Dec. 8, 9, 12, 1887. Decided May 14, 1888.

APPEAL from a decree of the Circuit Court of the United States for the Northern District of California, dismissing a suit to cancel

*Head notes by *Mr. Justice* BRADLEY.

and annul a patent for land issued by the United States. *Affirmed.*

Reported below in 30 Fed. Rep. 147.

The facts are fully stated in the opinion.

Messrs. A. H. Garland, Atty-Gen., **Michael Mullany** and *D. M. Delmas*, for appellant:

This Act constitutes a grant *in præsenti* of all lands thereby granted.

Schulenberg v. *Harriman*, 88 U.S. 21 Wall. 58 (22:554); *Missouri, K. & T. R. Co.* v. *Kansas Pac. R. Co.* 97 U. S. 497 (24:1097); *Van Wyck* v. *Knevals*, 106 U. S. 370 (27:204); *Wright* v. *Roseberry*, 121 U. S. 488 (30:1039); *St. Joseph & D. C. R. R. Co.* v. *Baldwin*, 103 U. S. 427 (26:578); *Leavenworth, L. & G. R. R. Co.* v. *U. S.* 92 U. S. 743 (23:638.)

Any land that was reserved or otherwise disposed of or sold, at the date of the Act, was not public land, and was not therefore granted to the company.

Newhall v. *Sanger*, 92 U. S. 761 (23:769); *U. S.* v. *Stone*, 69 U. S. 2 Wall. 525 (17:765); *Dubuque & P. R. R. Co.* v. *Litchfield*, 64 U. S. 23 How. 66 (16:500); *Burlington & M. R. R. R. Co.* v. *Fremont County*, 76 U. S. 9 Wall. 89 (19:563); *Reichart* v. *Felps*, 73 U. S. 6 Wall. 160 (18:849); *Best* v. *Polk*, 85 U. S. 18 Wall. 112 (21:805); *Sherman* v. *Buick*, 93 U. S. 209 (23:849); *Stoddard* v. *Chambers*, 43 U. S. 2 How. 285 (11:270); *Patterson* v. *Winn*, 24 U. S. 11 Wheat. 384 (6:500); *Barry* v. *Gamble*, 44 U. S. 3 How. 53 (11:489); *Mills* v. *Stoddard*, 49 U. S. 8 How. 345 (12:1107).

After the general route map has been filed with the Secretary of the Interior, and the line of the road has thereby become definitely fixed, the company may change the line of their road or route at pleasure, so long as such change does not take the road beyond the lands granted.

St. Joseph & D. C. R. R. Co. v. *Baldwin*, *supra*: *Knevals* v. *Hyde*, 5 Dill. 469; *Grinnell* v. *Chicago, R. I. & P. R. R. Co.* 103 U. S. 742 (26:457); *Van Wyck* v. *Knevals*, 106 U. S. 366 (27:203); *Walden* v. *Knevals*, 114 U. S. 374 (29:167); *Leavenworth, L. & G. R. R. Co.* v. *U. S.* 92 U. S. 733 (23:634); *U. S.* v. *Burlington & M. R. R. R. Co.* 4 Dill. 305; *Missouri, K. & T. R. Co.* v. *Kansas Pac. R. Co.* 97 U. S. 491 (24:1095).

The patents issued for those lands to the railroad company were issued without authority of law, and are and have always been void.

Newhall v. *Sanger*, and *Leavenworth L. & G. R. R. Co.* v. *U. S. supra*; *Carr* v. *Quigley*, 57 Cal. 394; *McLaughlin* v. *Powell*, 50 Cal. 67.

Messrs. **A. L. Rhodes** and **L. W. Elliott**, for appellees:

The purchasers of these lands from the railroad company, being *bona fide* purchasers, are entitled to protection.

Moffat v. *U. S.* 112 U. S. 31 (28:625); *U. S.* v. *Flint*, 4 Sawy. 60.

The title of the railroad to specific parcels of land attaches upon filing with the Secretary of the Interior the map of definite location of the line of the road, and the acceptance thereof by the Secretary.

Walden v. *Knevals*, 114 U. S. 374 (29:167); *Kansas Pac. R. Co.* v. *Dunmeyer*, 113 U. S. 629 (28:1122); *Van Wyck* v. *Knevals*, 106 U. S. 360 (27:201); *Wood* v. *Burlington & M. R. R. R. Co.* 104 U. S. 329 (26:772); *St. Joseph & D. C. R. R. Co.* v. *Baldwin*, 103 U. S. 429 (26:579); *Barney* v. *Winona & St. P. R. R. Co.* 117 U. S. 232 (29:860).

This is a stale claim.

U. S. v. *Tichenor*, 8 Sawy. 142; *U. S.* v. *Flint*, 4 Sawy. 58; *Manning* v. *San Jacinto Tin Co.* 7 Sawy. 430; *Badger* v. *Badger*, 69 U. S. 2 Wall. 92 (17:837); *Stearns* v. *Page*, 48 U. S. 7 How. 826 (12:931); *Pratt* v. *California Min. Co.* 9 Sawy. 363; *Sullivan* v. *Portland & K. R. R. Co.* 94 U. S. 811 (24:326).

There is no equity in the bill.

Johnson v. *Towsley*, 80 U. S. 13 Wall. 72 (20:485); *Maxwell Land-Grant Case*, 121 U. S. 325 (30:949); *Steel* v. *St. Louis Smelting & Ref. Co.* 106 U. S. 447 (27:226); *St. Louis Smelting & Ref. Co.* v. *Kemp*, 104 U. S. 636 (26:875); *Ehrhardt* v. *Hogaboom*, 115 U. S. 67 (29:346).

Mr. Justice **Bradley** delivered the opinion of the court: [430]

This is a bill in equity filed by the attorney-general on behalf of the United States against the Central Pacific Railroad Company, Kate D. McLaughlin, as executrix of Charles McLaughlin, deceased, and others, to cancel and annul a certain patent of the United States, issued on the 23d day of November, 1875, to the Central Pacific Railroad Company from the General Land Office, for certain sections and fractional sections of land in San Joaquin and Calaveras Counties in California. The ground of relief stated in the bill is that the patent was [431] issued without authority of law, for the reason that all of said lands were within the boundaries of a certain Mexican grant claim, called the Moquelamos grant, and were held and reserved for adjustment and satisfaction of said claim at the time when the line of railroad belonging to said company was definitely fixed, and when, by virtue of that fact, the government grant on which the patent was based accrued. The patent was granted to the railroad company for the lands in question as portions of its land grant under the Pacific Railroad Acts passed by Congress in 1862 and 1864. This grant was originally made to the Central Pacific Railroad Company of California; was assigned at the place in question by said company to the Western Pacific Railroad Company on the 31st day of October, 1864, which assignment was approved by Act of Congress, of March 3, 1865; and the two companies named were consolidated together and constituted the present Central Pacific Railroad Company in August, 1870, upon which last company devolved all the franchises, rights, privileges and property of the said two first named companies.

The bill sets forth the alleged Mexican grant, called the Moquelamos grant, and the proceedings in relation thereto upon the claim made for its confirmation, before the commissioners to ascertain and settle private land claims in California, and the District and Supreme Courts of the United States, resulting in the final rejection of said claim by the adjudication of the supreme court on the 13th of February, 1865. The bill also states that the lands included within the boundaries of said claim were held and reserved during said proceedings, to await final adjudication, until said last mentioned date; that said lands lie in the Counties

of San Joaquin and Calaveras, on each side of the road of the said railroad company between the Cities of Sacramento and San José. It recites those parts of the Acts of Congress passed in 1862 and 1864, which granted to the Central Pacific Railroad Company of California the right to construct a railroad and telegraph line from the Pacific Coast, at or near San Francisco, to the eastern boundary of the State; and [432] states the fact that under and by virtue of said Acts there were granted, for the purpose of aiding in the construction of said road and telegraph line, ten alternate sections of the public lands on each side of and within twenty miles of the road, designated by odd numbers, not sold, reserved or otherwise disposed of by the United States, and to which a homestead or preemption claim might not have attached at the time the line of the road of said company should be definitely fixed.

The bill then alleges that on the 5th day of October, 1864, the line of said road from the City of Sacramento to its western terminus at the City of San Francisco, including that portion opposite to the Moquelamos grant, was definitely fixed, and a map of said definite location of said road was filed by the said Central Pacific Railroad Company of California with the Secretary of the Interior on the 8th of December, 1864; and that on the 31st of January, 1865, the Secretary of the Interior ordered all of the public lands not then sold, reserved or otherwise disposed of within the limits of twenty-five miles on each side of said road to be withdrawn from preemption, private entry and sale.

The bill then states the assignment on the 31st of October, 1864, by the Central Pacific Railroad Company of California to the Western Pacific Railroad Company, of the right to construct the road from Sacramento to San José, with all privileges and benefits, etc., and the confirmation of said assignment by Act of Congress, approved March 3, 1865. It further states that notwithstanding the lands within the boundaries of the Moquelamos grant claim were held and reserved for the satisfaction of said claim from the acquisition of California until the final rejection of the claim on the 13th day of February, 1865, embracing the time when the line of said road was definitely fixed, yet the said patent was issued as aforesaid to the said Central Pacific Railroad Company, as the successor in interest of the Western Pacific Railroad Company, for the lands in question, which it is alleged were embraced within the boundaries of said Moquelamos grant claim.

The defendants, in their answer, deny that the line of the railroad from Sacramento to its [433] western terminus was definitely fixed in October, 1864, or at any time prior to 1868; or that a map of the definite location of the said line or of the portions thereof opposite the Moquelamos grant was filed with the Secretary of the Interior, or in the General Land Office, in December, 1864, or at any time prior to the first of February, 1870. They admit that on the 5th of October, 1864, the Central Pacific Railroad of California designated the general route of its said road between San Francisco and Sacramento; and on the 8th of December, 1864, filed a map of the general route of its said railroad in the Department of the Interior. They admit that the lands in question are within twenty miles of the railroad as definitely located and fixed.

They allege that the Western Pacific Railroad Company, in the year 1868, definitely and finally located and fixed that portion or section of the line and route of said railroad and telegraph extending from a point at or near the City of Stockton to a point at or near Sacramento, and, on the first of February, 1870, filed in the Department of the Interior a map of said portion or section of said line; and that after the consolidation and the formation of the present Central Pacific Railroad Company, to wit on the 27th day of February, 1873, the said company filed in the Department of the Interior a map of the line and route of said railroad as definitely and finally located and fixed from the end of the first twenty-mile section from San José to a point at the end of the 133 $\frac{16}{100}$ miles from San José, at or near Sacramento; and that said line and route so definitely and finally located and fixed are opposite to the lands in question, and include the line or section definitely located by the Western Pacific, and shown on the map filed in February, 1870.

The defendants further allege that the lands in question were public lands, and were not reserved, or disposed of in any manner, at the time of the passage of the Acts of July 1, 1862, and July 2, 1864, respectively, and at the time of filing the general route of the railroad in December, 1864, and of the withdrawal of the lands by the Secretary of the Interior in January, 1865, and of the definite and final location in 1868, and of filing the map of the road in February, 1870, and the map in Febu- [434] ary, 1873. They deny that said lands were included in any Mexican grant, or that they were reserved or held under the laws of the United States for the satisfaction of any claim under such grant; and they aver that said lands, during all the times mentioned in the bill, up to and until the issuing of the patent, were public lands of the United States; that said patent was issued to said railroad company under and in accordance with the provisions of said Pacific Railroad Acts, and was and is legal and valid; that on the 12th of January, 1876, the Central Pacific Railroad Company conveyed to Charles McLaughlin, in fee simple, the lands in question, for which he paid a full and adequate consideration. The defendants append schedules to their answer showing the particular parcels for which they severally defend. To this answer several exceptions were taken, and being overruled, the general replication was filed. Thereupon the parties joined in a written admission of certain facts agreed to be true, which, omitting those relating to the status of the parties and the organization of the corporations mentioned in the pleadings, is as follows, to wit:

"8. That on, to wit, the 22d day of September, A. D. 1852, one Andres Pico, since deceased, presented and filed his petition to and with the board of land commissioners appointed under the provisions of the Act of Congress approved March 3, 1851, entitled 'An Act to Ascertain and Settle Private Land Claims in the State of California,' in which petition he claimed in fee, as a grant by the Mexican Government, a cer-

tain tract of land situated in the said State and district of California, and known by the name of 'Moquelamos,' for eleven square leagues of land, which he alleged in his petition was granted to him within the boundaries as described in the grant made June 6, A. D. 1846, by Pio Pico, the then Mexican Governor of California, by virtue of the authority in him vested; and said petition closed with a prayer to allow and confirm to him, the petitioner, Andres Pico, the said tract of land, as described in the grant made by the aforesaid Governor, Pio Pico, with the boundaries as therein set forth, to wit: Once sitios de ganado mayor en el rio [435] de Moquelumnes que linda al norte con la orilla sur de dicho rio; al oriente con la sierra immediata al sur con el terreno del Señor Gulnak; y al poniente con los esteros de la plaza; and the translation thereof presented to said board with said petition is as follows, to wit: 'Eleven square leagues on the River Moquelamos, bordering on the north upon the southern shore of said river; on the east upon the adjacent ridge of mountains; on the south upon the lands of Mr. Gulnak; and on the west upon the estuaries of the shore.' That said petition was in the usual form of petitions to the board of land commissioners, for the confirmation of claims to land in California, founded upon grants made by the Mexican Government.

"9. That said board of land commissioners proceeded to consider and determine the said petition and claim of the said Andres Pico, and on the 3d day of October, 1854, rendered a decree denying the application of said petitioner for a confirmation of said grant of land, and rejecting his claim therefor.

"10. That afterwards, to wit, on the 11th day of June, 1855, the said claimant and petitioner, Andres Pico, appealed to and petitioned the United States District Court for the Northern District of California for a reversal of the proceedings and decision of the said board of land commissioners, and prayed that the decree of rejection by said board be reversed, and that the petitioner's claim to the said tract of land above described be declared valid, and that a decree be entered confirming the same to the petitioner, Andres Pico, in accordance with said alleged grant to him by the Mexican Government, as aforesaid; and the said district court thereupon proceeded to hear, consider, and review the said decision and decree of said board of land commissioners and the petition of said Andres Pico, and at a stated term of said court, held on the 24th day of April, 1857, made and entered a decree reversing the decree of rejection of said claim by the said board of land commissioners, and adjudged and decreed that the claim of petitioner was valid, and confirmed the Moquelamos grant above described to the petitioner, Andres Pico, and defined the boundaries thereof as follows:

[436] "The land of which confirmation is hereby made is of the extent of eleven square leagues, and no more, and is known by the name of 'Moquelamos,' and is situate on the river Moquelamos, bordering upon the north upon the southern shore of said river; on the east on the adjacent ridge of said mountains; on the south on the land of Mr. Gulnak, and upon the west upon the estuaries of the shore, as described in the original decree and grant of the same by the Governor of California on the 6th day of June, 1846, a copy of which is on file in the transcript in this case."

"11. That thereafter the United States appealed from said decree of confirmation to the Supreme Court of the United States, and at the December Term, 1859, of said court the aforesaid decree of confirmation of said district court was, by the Supreme Court of the United States, reversed, and the case remanded, with directions to have further evidence taken in the cause and claim of said Andres Pico for said Mexican grant Moquelamos. That thereafter the said district court proceeded to take further evidence in said case, and after such further evidence was taken, the case was again brought before said district court for hearing, and by that court a decree was entered on the 4th day of June, 1862, adjudging the claim of the petitioner to be invalid, and rejecting the same.

"12. That thereafter, on, to wit, the 15th day of October, 1862, the petitioner, Andres Pico, appealed to the Supreme Court of the United States from said decree of said district court rejecting his claim as invalid. That a final hearing of said cause was had before said supreme court, and on the 13th day of February, A. D. 1865, a judgment was made and entered by said United States Supreme Court affirming said decree of the United States District Court, rejecting the claim of said Pico, and adjudging the same to be invalid.

"13. That all of the lands included within the boundaries of said alleged Moquelamos grant above described lie in said State and lie on each side of the road of said the Western Pacific Railroad Company, and opposite thereto in its course from said City of Sacramento to said City of San Josè.

"14. That under and by virtue of the Act of Congress, approved July 1, 1862, entitled, 'An [437] Act to Aid in the Construction of a Railroad and Telegraph Line from the Missouri River to the Pacific Ocean, and to Secure to the Government the Use of the Same for Postal, Military, and Other Purposes,' and the Act amendatory thereof, approved July 2, 1864, commonly known as the Pacific Railroad Acts, the Central Pacific Railroad Company of California was authorized to construct a railroad and telegraph line from the Pacific Coast, at or near San Francisco, to the eastern boundary of said State of California; and under and by virtue of said Acts of Congress there were granted, for the purpose of aiding in the construction of the road and telegraph line of said the Central Pacific Railroad Company of California, ten alternate sections of the public lands of the United States, on each side and within twenty miles of the road of said company, designated by odd numbers, not sold, reserved, or otherwise disposed of by the United States, and to which a homestead or preemption claim might not have attached at the time the line of the road of said company should be definitely fixed.

"15. That the said railroad company filed its assent to said Central Pacific Railroad Acts at the time and in the manner in said Acts provided.

"16. That on, to wit, the 23d day of December, 1864, the Secretary of the Interior of the United States ordered all of the public lands

not then sold, reserved or otherwise disposed of, within the limits of twenty-five miles on each side of the route or line of the road of said railroad company, to be withdrawn from preemption, private entry, and sale in accordance with the provisions of said Acts of Congress, for said railroad company; and said order was thereupon transmitted to the register and receiver of the United States land offices at Stockton, San Francisco, and Sacramento, State of California, and received by them on the 31st day of January, 1865.

"17. On the 29th day of September, 1866, the president of the Western Pacific Railroad Company made and filed with the United States Surveyor-General of the State of California the varied statement provided for by section 4 of said Act of July 1, 1862, and section 6 of said Act of July 2, 1864, showing the [438] construction, completion, and equipment by said Western Pacific Railroad Company, of the most westerly twenty miles, viz., the twenty miles next northeasterly from the City of San Josè of the railroad and telegraph line of said Western Pacific Railroad Company, in compliance with and conformity to the requirements and provisions of said sections of said Acts of Congress; and said surveyor-general thereupon, at the request of said railroad company, notified the commissioners designated and provided for by said Acts to examine said twenty miles of said road and telegraph line and report thereon, in accordance with the provisions of said Acts of Congress; and on the 5th day of October, 1866, said commissioners made their report and certificate to the effect that said twenty miles of road and telegraph line mentioned in said verified statement had been constructed, completed, and equipped by said railroad company, as provided and prescribed in and by said Acts of Congress.

"Similar verified statements were made by the president of said Western Pacific Railroad Company as follows: On April 28, 1869, for a section of the road beginning at the junction thereof with the road of the Central Pacific Railroad Company of California, at the American River Bridge near Sacramento City, and extending thence southwesterly twenty (20) miles; also, on October 12, 1869, for a section of said road beginning at the westerly end of the last mentioned section, and extending thence southwesterly sixty-three (63) miles; also on December 29, 1869, for a section of said road beginning at the westerly end of the last mentioned section, and extending thence twenty and two tenths ($20\frac{2}{10}$) miles to the easterly end of the first mentioned section, of twenty miles, beginning at San Josè.

"That all those statements were, upon their being made, filed with said surveyor-general, and he did forthwith, upon the filing of each statement respectively, and at the request of said company, notify said commissioners. That said commissioners did thereupon examine said sections of said road, and made their respective reports thereon, to the same effect as upon the first section of said road, as aforesaid, [439] said reports being made, respectively, on the 29th day of April, 1869, and the 13th of October, 1869, and the 6th day of January, 1870.

"That each of the four reports of said commissioners was thereupon filed with the Secretary of the Interior, and he thereupon recommended the acceptance of the same, and the issue of the bonds and patents for lands due on account of said sections of road, agreeably to the provisions of said Pacific Railroad Acts; and thereupon the President of the United States approved the same, and ordered the Secretary of the Interior and the Secretary of the Treasury to carry the said recommendation into effect, the first of which approvals by the President of the United States was made on the 4th day of December, 1866, and the last on the 21st day of January, 1870. That the four sections above mentioned comprise the whole of said road, from the City of San Josè to the City of Sacramento. That said road has been in full operation and has been operated for the transportation of passengers and freight since the 9th day of June, A. D. 1869.

"18. That thereafter there was issued, on the 23d day of November, 1875, to said Central Pacific Railroad Company (?), under the signature of the President of the United States, attested by the recorder of the General Land Office, and under the seal of the General Land Office what purported to be, and in form was, a patent.

"That the patent was in the usual form of the patents issued by the United States to the several railroad companies, under and in pursuance of said Pacific Railroad Acts of Congress.

"19. That said patent described and purported to convey to said railroad company the several tracts of land mentioned and described in said bill of complaint.

"20. That all of said lands described in the bill of complaint herein are opposite to, and within the 25-mile limits on each side of, the route or line of said railroad company's road, as laid down on the map filed by said Central Pacific Railroad Company of California in the Department of the Interior on the 8th day of December, 1864."

Besides these admissions a large amount of evidence was taken in the case, and a final [440] hearing was had before the court below in November Term, 1886, and a decree was made dismissing the bill of complaint.

The court, in its opinion, held, amongst other things:

1. That the map of the route of the Western Division of the Central Pacific Railroad of California, filed with the Secretary of the Interior Dec. 8, 1864, is the map of the general route, and not of the line as "definitely fixed," within the meaning of the Land Grant Act of 1862.

2. That the map of the route of said road as finally located and constructed, filed with the Secretary of the Interior, February 1, 1870, and accepted as such by that officer, is the map of definite location.

3. That the Moquelamos grant was finally rejected February 13, 1865, after which the lands within the exterior boundaries of the grant ceased to be *sub judice* and became public lands, to the odd sections of which, within twenty miles of the line of the road, the right of the railroad company attached, and became indefeasible, immediately upon the filing of the map of definite location of the road, and the acceptance thereof as such by the Secretary of the Interior.

4. That as, from the year 1855, the land between the Moquelamos and Calaveras Rivers, east of the range (or meridian) line between ranges 7 and 8 was treated by the Government as lying outside of the Moquelamos grant claim, and as being public land, by running the section lines and filing plats of survey, and selling some of the lands, and opening the others to private entry, etc., the Government should be held in a court of equity to be estopped as against the grantees of the patentee from now alleging that those lands are within the boundaries of the claim.

5. That the withdrawal of the lands upon filing the map of the general route of the road, for twenty-five miles on each side of the line indicated, protected the lands against the attaching of any other right as against the railroad company until the filing of the map of definite location.

Without expressing, at present, any opinion on the conclusions thus reached by the circuit [441] court, we will proceed to examine (1) whether the land in question was actually within the outside limits of the pretended Moquelamos grant. If it was, and if the title of the railroad company accrued whilst the grant was under judicial examination, we will inquire (2) whether, for that reason, the railroad grant was prevented from taking effect within the said outside limits.

The defendants adduced evidence to show that the greater part of the lands in question were not embraced within the limits of the grant. Those limits are fairly well defined on three sides: the northern boundary being the Moquelamos or Moquelumne River; the southern the lands of Mr. Gulnak (being the "Campo de los Franceses"), and the western being the "estuaries of the shore," or the marshes bordering on the San Joaquin River, not very clearly defined in outline, but sufficiently so to serve as a boundary. On the east side, the supposed grant is bounded "*con la sierra immediata;*"—"by the adjacent ridge of mountains" or "by the adjacent sierra." This is interpreted as meaning to exclude the sierra itself; in other words the grant extends, according to its terms, to the commencement of the mountain or sierra.

One of the witnesses, R. C. Hopkins, who had been employed by the Government for more than thirty years in the Surveyor-General's office in California, in connection with the Spanish land grants, making translations and testifying in the courts, was asked to translate the descriptive portion of the Moquelamos grant, which he did as follows: "Eleven square leagues on the Moquelamos River, which bounds on the north with the southern shore of the said river, on the east with the contiguous sierras, on the south with the lands of Mr. Gulnak, and on the west with the estuaries of the beach." He further testified that when "sierra immediata" is called for as a boundary, the "sierras" are excluded.

Now, if there were any mountain ridge or sierra in the neighborhood of the other boundaries called for, lying to the eastward, and in the vicinity of the Gulnak tract, the solution would be easy. But the Sierra Nevada is the only mountain in that direction, and that is sixty or seventy miles east of the line of the railroad, and still farther from the marshes of the beach forming the western boundary of the [442] grant,—an extent which would give a total area of over eighty square leagues. The defendants contend that such an extension of the outside boundaries of the grant (supposing it to have been a real grant) cannot be presumed to have been in the minds of the parties; and they produce evidence to show that, starting from the marshes on the west, and proceeding eastwardly between the Gulnak tract and the Moquelumne River, the land is level valley land as far as the "Jack Tone road" (which runs north and south on the range line between ranges 7 and 8 east,—about seven miles east of the railroad), and that beyond this road the lands are hilly, covered with timber and brush, and gradually increase in altitude above the sea level up to the Sierra Nevada itself, becoming more broken and precipitous as we proceed.

As an example of this evidence, the testimony of Edward E. Tucker, an experienced surveyor in that country, and official surveyor of San Joaquin County, may be referred to. Amongst other things he says:

"I will say that from a line east of what is called the Jack Tone road, an irregular line about, well, I suppose, averaging say two miles east of the road, some places it comes within three quarters of a mile of the Jack Tone road, and at other places it is two or three miles from it—the ground becomes more or less broken and hilly, and in some places there are well defined hills, and in other places it is what would be designated, I suppose, rolling land; but the general character of the country from the point I have designated, east, between the Moquelumne and Calaveras Rivers, is irregular. It is up and down and generally rising; that is to say, the farther east a person goes the higher the hills become and the more irregular they are until the county line is reached. There are a number of places where there are quite high hills, and some deep elevations, and other places where perhaps a whole section would be what we call rolling land. There are no very steep hills or very high hills in a particular section, but it is what I would call, generally speaking, hilly land, the whole of it, and a rising tendency going towards the east. There are a great [443] many sections and quarter sections that I could locate from memoranda that I have in my book; hills, I could designate particularly, quarter sections, if required, but generally from that line indicated, east, the country is hilly. * * *

Q. 50. What can you say generally with reference to the elevation of the country going east from the line indicated by you as marking the division line between the plane land and the well defined hills near the Jack Tone road, and between the Moquelumne and Calaveras Rivers? A. The country as I described it before—some of it is rolling, some rough, hilly and broken; but it is all gradually, and some very rapidly, ascending. It is constantly ascending; that is, the hills, as you go east, are higher than—they keep getting higher as you go east. * * *

Q. 54. In your opinion as a surveyor and civil engineer where, with reference to the tract of country between the Calaveras and Moquelumne Rivers, does the Sierra Nevada range of mountains begin as a range or system? A. In my opinion a range of mountains begins—what

you might properly call the base of the mountains—on the plains where the land commences to go up regularly, and the hills are well defined,—what are generally called foot hills of the mountains; and in this instance I think the mountains begin where I have drawn that heavy red line on this diagram, Exhibit 18. I, of course, want it understood that I am not stating that those are mountains down there. I do not claim that they are mountains. I claim that they are well defined hills, and that they are regular from there east. They run right into the mountains and there is no way of drawing a line from them mountains east without going over hills; that is, a north and south line."

The witness further testified on cross examination, as follows:

"Q. 1. Did you hear, or come to know from anybody, that the rolling lands in range 9 east, any part of it, was ever designated as any part of the Sierra Nevada mountains? A. No, sir. Q. 2. Did you ever know or hear of the rolling land in range 10 east being ever designated as part of the Sierra Nevada mountains? A. A great deal of land in both those ranges has always been referred to by myself and others in speaking of it, as foot-hills. We never call it the Sierra Nevada mountains; we speak of it as foot-hills—going up to the mountains. Q. 3. Did you ever hear of rolling hills, if any there be, in range eight, designated as Sierra Nevada mountains? A. No, sir. I have heard that spoken of in the same manner—as foot-hills, but not as mountains."

[444]

This seems to us to be a fair exhibit of the general evidence on the subject. The complainant produced a number of witnesses to show that there is a mountain, called Bear mountain, east of range 11, commencing at the eastern side of said range, which would be twenty-four miles east of the Jack Tone road, thirty-one miles east of the railroad, and from thirty-six to forty miles east of the marshes of the San Joaquin. But the parties concur in considering the Moquelamos grant as comprised between the Moquelumne River on the north and the Calaveras River on the south; and this Bear mountain is entirely south of the Calaveras. There is north of it, and separated from it by the Calaveras River itself, a hill, called Central Hill, but it is no more of a mountain than many other of the high and abrupt hills at that distance eastward from the railroad. One of the most intelligent of the complainant's witnesses referred to was a Mr. Terry, a surveyor and teacher. The following is the material part of his examination on the subject:

"Q. 3. State whether or not, as a surveyor, you have been engaged at any time by the United States to survey public lands. A. I have.

"Q. 4. State what you surveyed in that neighborhood of country as United States surveyor A. Townships four and five north, ranges eleven and twelve east, Mount Diablo base and meridian.

"Q. 5. State whether you know a mountain in that locality known as Bear mountain. A. Yes, sir; and sometimes that range of mountains is called Hog Back. But it is laid down as Bear mountain on the maps, and is generally called so by surveyors.

"Q. 6. Please explain the general features, the condition, and appearance of that mountain known as Bear mountain. A. Well, it is a low mountain. The north end of it is covered with chaparral or shemisel, or whatever it is called.

[445

"Q. 7 How in regard to its extension northward? A. It does not extend north of the Calaveras River.

"Q. 8. Do you know a mountain or high elevation known as Central Hill? A. Yes, sir.

"Q. 9. State what connection there is, if any, between Central Hill and Bear mountain. A. There is no connection that I know of. The Calaveras River runs between them.

"Q. 11. State whether you know the locality north and south from and including Bear mountain, to and including Central Hill, and for a few miles north of that. A. Yes, sir· that was in my contract. I traveled all over that range of hills in surveying.

"Q. 12. Did you survey all that country? A. Yes, sir; that was in my contract.

"Q. 13. Please give a general description, and as particular a description as you can, of that country north and south from and including Bear mountain, to and including a few miles north—say five miles north—of Central Hill. A. There is a low range of hills running from the Calaveras River northerly—perhaps a little bit east or west of north—that is pretty hilly. That is from the west boundary, bluff, or bank, as you may call it, of the Calaveras River and of Chili Gulch. That is in townships four and five north, range eleven east.

"Q. 14. Describe the character of that land. A. It is hilly land; some of it is agricultural. I have surveyed several mines in there about Central Hill and further up. I do not know as I can tell exactly how those mines are located. The hilly lands of which I have been speaking are those north of the Calaveras River.

"Q. 15. State what the general character and appearance of Bear mountain is. A. It is a low mountain, and there is considerable oak and pine timber on it; but on the north end there is chaparral. Perhaps a mile up, running south, is covered with this brush.

"Q. 16. Does not Bear mountain appear conspicuous and in full view for, say, ten or twelve miles west of it? A. Yes, sir; from most points on the west it does. Ordinarily, this Bear mountain is within sight for several miles down here to the west. I used to travel over that country to the west of Bear mountain and between the rivers Moquelumne and Calaveras a good deal."

[446

We do not perceive that this evidence shows the existence of a sierra at this point, especially between the two rivers. But even if it did, it is still nearly forty miles east of the San Joaquin marshes, and the contents of the entire territory within the granted limits would be over 50 square leagues,—an extent of country which, compared with the quantity of lands granted (11 leagues), cannot, any more than can the eighty square leagues embraced within the limits of the Sierra Nevada, be presumed to have been within the intention of the parties. It would require clear and positive evidence to establish such a result.

The defendants contend that the commencement of the hilly land at or near the Jack Tone road is the true commencement of the

"adjacent sierra" named in the grant; and that the hilly and broken land east of that road is all comprehended in the foot hills of the mountain, and excluded from the grant. In confirmation of this view they not only rely on the topographical evidence which has been noticed, but on the fact that when the claim to the Moquelamos grant was first presented to the board of land commissioners in 1852, and for some time afterwards, the petitioner, Andres Pico, did not pretend or claim that the grant extended farther east than the Jack Tone road; and on the further fact, that the Surveyor-General for California, in surveying the public lands and delimiting the boundaries of unconfirmed grants, under the authority conferred upon him by the appropriation Act of August 31, 1852, 10 Stat. at L. 91, assumed the range line between ranges 7 and 8 (or the Jack Tone road) to be the utmost eastern boundary of the Moquelamos grant, and made his surveys up to that line and no farther. And in September, 1864, when further surveys were proposed, the attorneys of Pico gave notice to [447] the surveyor-general that the lands in townships 2, 3, and 4, south of the Moquelumne River, in ranges 5, 6, and 7 east (that is, the ranges immediately west of the Jack Tone road), were claimed by Pico under the Moquelamos grant, and that the said claim had been appealed to the Supreme Court of the United States, and was then pending; and requested the surveyor-general to suspend proceedings for preempting said land, or any part thereof. The quantity of land thus claimed to be within the said grant was more than twice the amount required to satisfy the grant, showing that the limits named in the notice did not refer to a specific location of the eleven leagues, but to the outside limits of the grant. This evidence, it is true, might not of itself be binding as against the Government; but, taken in connection with the acts of the Government itself, and the conduct of its officials, from high to low, acquiescing in this view, it shows a state of things, a concord of words and acts between the parties interested, which, on a question of boundary, is not only admissible, but entitled to much weight, especially after so long a period elapsed before this suit was instituted.

Another circumstance relied on to show that the limits of the grant did not extend, at most, farther east than the commencement of the hills near the Jack Tone road is that the southern boundary called for is the land of Gulnak. This land is conceded to be the French Camp Grant, or Rancho Campo de los Franceses. And this grant was so determinately located by the accurate *diseño* annexed to it, that its position was established without difficulty, and has never been seriously questioned As thus located, its northern line coincides in part with the Calaveras River, being situated a little to the north of the river towards the west, and the whole tract lies altogether west of the Jack Tone road, and does not, at the nearest point, approach it within less than half a mile. So that, if the Moquelamos grant (as required by its description) is to be bounded on the south by the Gulnak tract, it cannot itself extend to the east of said road without being forced to do so by the call of some distinct natural object.

On the whole, we are satisfied that the outside boundary limits of the Moquelamos grant, [448] as called for in the grant itself, do not extend east of the Jack Tone road, or the edge of the hills commencing near the same. This result would dispose of the present case with regard to nearly all the land in question therein. But as some of it lies west of said road, in range 7, and as the railroad land grant extends to the west of said road, it will be necessary to examine the other question referred to, namely: If the lands in controversy did lie within the exterior limits of the Moquelamos grant, and if the title of the railroad company did accrue whilst that grant was under consideration in the courts, did those facts prevent the railroad land grant from taking effect?

The Moquelamos grant belongs to that class of grants which may properly be called floats; that is, grants of a certain quantity of land to be located within the limits of a larger area. Mexican grants were of three kinds: (1) grants by specific boundaries, where the donee is entitled to the entire tract, whether it be more or less; (2) grants of quantity, as of one or more leagues within a larger tract described by what are called outside boundaries, where the donee is entitled to the quantity specified, and no more; (3) grants of a certain place or rancho by name, where the donee is entitled to the whole tract according to the boundaries given, or if not given, according to its extent as shown by previous possession. *Higuera* v. *U. S.* 72 U. S. 5 Wall. 827, 834 [18: 469, 471]. In the first and third kinds, the claim of the grantee extends to the full limits of the boundaries designated in the grant or defined by occupation; but in the second kind,—a grant of quantity only, within a larger tract,—the grant is really a float, to be located by the consent of the Government before it can attach to any specific land, like the land warrants of the United States. A float may be entitled to location either on any public lands in the United States, or only in a particular State or Territory, or within a more circumscribed region or district. Its character remains the same. The present grant is one of this kind. If it only extends to the Jack Tone road, as we suppose, it is still largely in excess of the quantity granted. If it extends, as the complainant insists, to the Bear mountain of the Sierra Nevada, the region embraced would [449] be immensely enlarged, comprising over fifty square leagues in the one case, and over eighty in the other. Can it be that such an extensive region was under interdict, as reserved land, absolutely exempt from disposition, even by Congress, during the whole period covered by the litigation respecting the validity of the grant, which, in the end, even if found valid, was only for the quantity of eleven square leagues? The investigation continued thirteen years. The grant was found to be a wretched fraud. Even if signed by Pico, it was got up after the Mexican authority had ceased, and was never confirmed by the Departmental Assembly, as no such assembly then existed; and at the date on which it purports to have been confirmed, the Departmental Assembly was not in session. It was, therefore, for good cause that it was rejected by the courts.

Laying all this aside, however, and looking at the claim as one fairly *sub judice*, we may repeat our question, whether it can be possible

that so great a region of country was to be regarded as reserved from alienation for so small a cause—an ordinary eleven-league grant. It is contended that the case of *Newhall* v. *Sanger*, 92 U. S. 761 [23:769], has concluded this question by an answer in the affirmative. This case will be examined hereafter. Meantime let us look at the nature of the supposed case. A grant of eleven square leagues is made out of a country seventy or eighty miles in length, and from six to ten in width, containing over eighty square leagues; and this whole eighty leagues is supposed to be retired from the disposable public domain for a period of years, no one knows how long. Does this look reasonable?

One or two observations may be made calculated to show the precise question in a still stronger light. *First.* It is in the option of the Government, not of the grantee, to locate the quantity granted; and, of course, a grant by the Government of any part of the territory contained within the outside limits of the grant only reduces by so much the area within which the original grantee's proper quantity may be located. If the Government has the right to say where it shall be located, it certainly has the right to say where it shall not be located; [450] and if it sells land to a third person at a place within the general territory of the original grant, it is equivalent to saying that the quantity due to the original grantee is not to be located there. In other words, if the territory comprehended in the outside limits and bounds of a Mexican grant contains eighty leagues, and the quantity granted is only ten leagues, the Government may dispose of seventy leagues without doing any wrong to the original grantee. This was the Mexican law, and of course it is our law. *U. S.* v. *Armijo*, 72 U. S. 5 Wall. 444, 449 [18:492, 493]. In practice, it is true, our authorities, in administering the public lands, have generally allowed the original grantee to make his own selection of the point where he will have his quantity located, provided he has it all located together in one tract. But this is a matter of favor, and not a matter of right. If this were not so the right of way granted for the railroads by Congress would be subject to question and litigation. There cannot be any doubt, however, of the validity of these grants. The cases which show the law on this subject are numerous; it is only necessary to refer to a few of them. The following may be consulted: *Fremont* v. *U. S.* 58 U. S. 17 How. 542, 558, 565 [15:241, 246, 249]; *U. S.* v. *Armijo, supra; Hornsby* v. *U. S.* 77 U. S. 10 Wall. 224, 234-5 [19:900, 902]; *Henshaw* v. *Bissell*, 85 U. S. 18 Wall. 255, 266-7 [21:835, 839]; *Miller* v. *Dale*, 92 U. S. 473, 476-7 [23:735-737]; *Van Reynegan* v. *Bolton*, 95 U. S. 33, 36 [24:351, 352].

According to this rule of law, though the Moquelamos grant had been unquestionably genuine and valid, the Government would have had a right to dispose of the whole territory east of range 6 without infringing in the slightest degree the rights of Pico, who would still have had his eleven leagues at the western extremity of the territory. Any construction of the laws which would tend to trammel and obstruct this right of the Government, and render its Acts in making alienations void, should be made with great caution and a careful consideration of the necessary import of the terms of such laws. An illustration of the absurdity which may be involved in extending the supposed reservation from sale and alienation to this kind of grants is shown in the large extent of country which has been covered by [451] some of them known to the records of this court. In 1822 a grant of twenty leagues square, or four hundred square leagues of land, was made by the Supreme Government of Mexico to President Yturbide, to be located in Texas. In 1835 the Mexican Congress authorized his heirs to locate the land in New Mexico or in Upper or Lower California. In 1841 it was decreed that it should be located in Upper California—that is, the present State of California. This claim was actually presented to the board of land commissioners, and appealed to the district court and thence to this court. Now, according to the contention of the complainant in the present case, all California was interdicted territory during the pendency of that claim before the board and in the courts. The case is reported in 63 U. S. 22 How. 290 [16:342], *Yturbide* v. *U. S.* This case arose under the same law as that upon which the case of *Newhall* v. *Sanger, supra*, was based —the Act of March 3, 1851. If a reservation of an entire territory is to be implied from a floating grant of quantity within it, then, logically, every float, or land warrant issued by the Government, should, until actually located, operate as a reservation of the entire body of public lands.

We can well understand that Indian reservations and reservations for military and other public purposes of the Government should be considered as absolutely reserved and withdrawn from that portion of the public lands which are disposable to purchasers and settlers, —for, in those cases, the use to which they are devoted, and for which they are deemed to be reserved, extends to every foot of the reservation. The same reason applies to Mexican grants of specific tracts, such as a grant for all the land within certain definite boundaries named, or all the land comprised in a certain rancho or estate. But this reason does not apply to grants of a certain quantity of land, within a territory named or described, containing a much larger area than the amount granted, and where, as in the present case, the right of location within the larger territory is in the Government, and not in the grantee. In such case the use does not attach to the whole territory, but only to a part of it, and to such part as the Government chooses to designate, provided the requisite quantity be appropriated.

The case of the *Leavenworth, L. & G. R. R.* [452] *Co.* v. *United States*, 92 U. S. 733 [23:634], preceded the case of *Newhall* v. *Sanger*, and was relied on in the latter case. But the *Leavenworth Case* related to an Indian reservation, and the legislative grant upon which it depended (12 Stat. at L. 772), entitled, "An Act for a Grant of Lands to the State of Kansas, in Alternate Sections, to Aid in the Construction of Certain Railroads and Telegraphs in Said State," had an express proviso, "that any and all lands heretofore reserved to the United States, by any Act of Congress, or in any other manner by

competent authority, for the purpose of aiding in any object of internal improvement, or for any other purpose whatsoever, be, and the same are hereby, reserved to the United States from the operation of this Act, except so far as it may be found necessary to locate the routes of said road and branches through such reserved lands, in which case the right of way only shall be granted." The land grant in that case was construed as taking effect immediately, and as vesting a present title in the State of Kansas, though a survey of the lands and a location of the road were held to be necessary to give precision to it, and attach it to any particular tract. The Treaty with the Great and Little Osage Tribe of Indians, made June 2, 1825, which contained a cession to the United States of certain land, contained this clause, to wit: "Within the limits of the country above ceded and relinquished there shall be reserved to and for the Great and Little Osage Tribe or nation aforesaid, so long as they shall choose to occupy the same, the following described tract of land." The described tract embraced the land in question in the cause, and the court held that it was no part of the public lands of the United States, and that no part of it passed to the State of Kansas under the grant, though the railroad passed through it. In our judgment that case differed materially from the one now before us. The whole reservation was appropriated to the use of the Osage nation as long as they chose to occupy it.

The case of *Newhall* v. *Sanger*, 92 U. S. 761 [23:769], on which the complainant confidently relies, was argued and decided shortly after the *Leavenworth Case*. It arose upon a bill to [453] quiet title to a quarter section of land situated in township 3 N., range 7 E., and therefore west of the Jack Tone road, and within the then admitted limits of the Moquelamos grant now under discussion. We have taken the pains to examine the original record. The bill is comprised in a page and a half, and the whole record in six pages. Sanger, the complainant below, claimed title through the Western Pacific Railroad Company, to whom a patent had been issued in April, 1870, in professed compliance with the requirements of the Acts of Congress of 1862 and 1864. The bill alleges that Newhall claimed title to the same land under a subsequent patent, which recited that the first patent had issued by mistake to the Western Pacific Railroad Company, because the land was within the exterior limits of a Mexican grant called Moquelamos. The bill alleged that this grant was rejected by the final decision of this court in December Term, 1864, before the reservation of lands for the railroad was made; but that the President, in making the second grant, pretended that the Moquelamos grant was not rejected until the 13th day of February, 1865, after the reservation for railroad purposes, claiming the right to look into the minutes of this court to ascertain the precise day when the claim was rejected, and thereby disregarding the mandate; whereas the complainant contended that the rejection took effect from the first day of the term.

This was the substance of the bill. The only issue it raised was as to the time when the rejection of the grant legally took effect, whether at the beginning of the term (December 5, 1864), or on the actual day of rendering the judgment (February 13, 1865); one date being before and the other after the withdrawal of the lands from sale for the benefit of the railroad company; and such withdrawal being assumed to be the act by virtue of which the railroad title accrued. There was nothing in the bill to show that the boundaries named in the grant contained any more than eleven square leagues of land, the quantity granted.

The bill was demurred to, the cause was submitted without argument, and the demurrer was overruled. The defendant adhering to his demurrer, a decree was entered for the complainant. An appeal was then taken to this [454] court, the cause was submitted on printed briefs, and the decree of the circuit court was reversed. The opinion took no notice of the fact (which did not appear in the record) that the grant was one of that class in which the quantity granted was but a small part of the territory embraced within the boundaries named. It proceeded throughout as it would have done on the supposition that the grant covered and filled up the whole territory described. It simply dealt with and affirmed the general proposition that a Mexican grant while under judicial investigation was not public land open for disposal and sale, but was reserved territory within the meaning of the law,—a proposition not seriously disputed. On the question of time when the rejection of the grant took effect, it held with the defendant that the records of this court could be consulted to ascertain the precise day of rendering judgment. After deciding this point, there was no difficulty, under the admissions of the bill, in reversing the decree of the circuit court. The opinion, however, examined somewhat at large the grounds on which it should be held that Mexican grants (whether valid or invalid), while under judicial consideration, should be treated as reserved lands. The principal reason was that they were not "public lands" in the sense of congressional legislation; those terms being habitually used to describe such lands as are subject to sale or other disposal under general laws. The Pacific Railroad Acts of 1862 and 1864 only granted, in aid of the railroads to be constructed under them, "every alternate section of public land * * * not sold, reserved, or otherwise disposed of by the United States, and to which a preemption or homestead claim may not have attached at the time the line of said road is definitely fixed." The lands comprised in a Mexican grant, it was held, must be regarded not as "public lands" but as "reserved" lands, because by the treaty with Mexico, all private property was to be respected. And when the Act of March 3, 1851, created a board of commissioners to examine all claims to Mexican grants, the 13th section declared "that all lands the claims to which have been finally rejected by the commissioners in the manner herein provided, or which shall be finally de- [455] cided to be invalid by the district or supreme court, and all lands the claims to which shall not have been presented to the commissioners within two years after the date of this Act, shall be deemed, held and considered as part of the public domain of the United States (9 Stat. at L. 633);" implying that until then they were not part of the public domain. The

same conclusion was thought to be inferred from the Act of March 3, 1853, which introduced the land system into California; the sixth section of which, amongst other things, exempted from preemption and sale "lands claimed under any foreign grant or title." And this reservation, the court argued, would apply equally to grants that were fraudulent and void, as to those that were valid; for, until investigated, it could not be known which were valid and which were void.

This reasoning of the court in *Newhall* v. *Sanger* is entirely conclusive as to all definite grants which identified the land granted, such as the case before it then appeared to be; but is it fairly applicable to floats? that is to say, grants of a larger quantity to be located within a certain tract or territory, whether of limited extent, marked by certain bounds, or anywhere in the State, as in the case of Yturbide? Many small grants, of only a few leagues, were susceptible of location in large territories. The Alvarado grant, claimed by Fremont—*Fremont* v. *U. S.* 58 U. S. 17 How. 542 [15:241],—was only for ten square leagues within a region containing upwards of a hundred square leagues. The description in the grant was "the tract of land known as Mariposas, to the extent of ten square leagues, within the limits of the Sierra Nevada and the rivers known by the names of the Chanchilles, of the Merced, and of the San Joaquin." Did all this vast region cease to be the public domain of the United States for the sake of the ten leagues which constituted the actual grant? Would not such a conclusion have been unreasonable, prejudicial to the public interest, and entirely unnecessary for the protection of the grantee? It may be that the land office might properly suspend ordinary operations in the disposal of lands within the territory indicated, and in that sense they might not be considered as public lands; but why should they not be regarded as public lands disposable by Congress itself, care being taken to preserve a sufficient quantity to satisfy the grant?

[456]

As we have already seen, there can be no doubt that a grant made by Congress within the limits of a territory subject to a Mexican float, would take precedence of the float if sufficient land remained to satisfy it. The only question is, whether the surplus land so at the disposal of Congress may be regarded as public land within the meaning of the railroad aid grants. We are disposed to think that it may be; and that as to grants of this character, floating grants as they may be called, the railroad aid grants are not deprived of effect, provided a sufficient quantity lying together be left to satisfy the grant. In this case no difficulty could occur in carrying out this view. The territory described has sufficient extent west of range 7 to satisfy the grant of eleven leagues, and there seems to be no valid reason why it should not be satisfied from this part. Of course, the satisfaction of the grant is a fiction; for it never had any validity But the part referred to would be sufficient to satisfy it, if it had been a valid grant. And as the Government had the right of location, and has made a grant of its title to the railroad company the company may exercise the same right subject to the like conditions. The company has made its election to take its lands in range 7 and the ranges that lie easterly thereof; and this option leaves the tract west of range 7 (subject to its right of way) open to disposal in the ordinary manner of other public lands.

There is really nothing in the decision of *Newhall* v. *Sanger* in conflict with the views here expressed; because the court did not have before it the case of a floating grant.

In a number of cases decided since the decision in *Newhall* v. *Sanger**, that case has been referred to with approbation; and in some of them expressions have been used as if the question of floating grants to be located in larger territories had been decided therein. But we have seen that this is not correct, and we are not aware of any case in which this class of grants has been actually involved and has formed the subject of decision.

[457]

The decree of the Circuit Court is affirmed in this and the other cases argued with it. In consequence of the death of Kate D. McLaughlin, the decree will be entered as of the first day of the term, *nunc pro tunc.*

EVERETT DEWITT *et al.* v. KATE D. MCLAUGHLIN, EXIX., &c. [No. 11]. *Argued with above Dec. 8, 1887. Decided May 14, 1888.*

In error to the Circuit Court of the United States for the District of California.

Mr. W. J. Johnston and *Mr. M. D. Brainard* for plaintiffs in error.

Mr. A. L. Rhodes and *Mr. Henry Beard* for defendant in error.

Judgment affirmed with costs, on the authority of the decision and opinion in case No. 1027, *U. S.* v. *McLaughlin et al., ante*, 213. Judgment to be entered *nunc pro tunc* as of October 10, 1887

GEORGE FRIEND *et al.* v. JOHN H. WISE, Admr. &c. [No. 12]. *Argued with above Dec. 8 1887 Decided May 14, 1888.*

In error to the Circuit Court of the United States for the District of California.

Mr W. J. Johnston and *Mr. M. D. Brainard* for plaintiffs in error.

Mr. A. L. Rhodes and *Mr. Henry Beard* for defendant in error.

Judgment affirmed with costs, on the authority of the decision and opinion in case No. 1027, *U. S.* v. *McLaughlin et al., ante*, 213. Judgment to be entered *nunc pro tunc* as of October 10, 1887.

JAMES C. CALLAN, *Appt.*, [540]

v.

A. A. WILSON, Marshal of the DISTRICT OF COLUMBIA.

(See S. C. Reporter's ed. 540-557).

Right of trial by jury in District of Columbia —police court—right at first trial—right in appellate court.

1. The Constitution of the United States requires

*The case of *Newhall* v. *Sanger* is referred to—on the question of the time when lands claimed under Mexican grants are to be considered public lands—in Huff v. Doyle, 93 U. S. 564 (23:977); Ryan v. Cent. Pac. R. Co. 99 U. S. 387, 389 (25:305,306); Quinn v. Chapman, 111 U. S. 446 (28:476); Kansas Pac. R. Co. v. Dunmeyer, 113 U. S. 642 (28:1126). Ed.

that the right of trial by jury shall be secured to the people of the District of Columbia.

2. A person charged with having committed the crime of conspiracy in the District of Columbia is entitled to a jury, when put upon his trial.

3. The jurisdiction of the Police Court of that District, as defined by existing statutes, does not extend to the trial of infamous crimes or offenses punishable by imprisonment in the penitentiary.

4. Except in those petty offenses which, according to the common law, may be proceeded against summarily, the guarantee of an impartial jury to the accused in a criminal prosecution, conducted either in the name or under the authority of the United States, secures to him the right to a jury trial the first time, and in whatever court, he is put on trial. In such cases a judgment of conviction not based upon a verdict of guilty by a jury is void.

5. To accord to the accused a right to be tried by a jury in an appellate court, after he has been once fully tried, otherwise than by a jury, in the court of original jurisdiction, and sentenced to pay a fine or be imprisoned, does not satisfy the requirements of the Constitution.

[No. 1318.]

Argued Jan. 16, 1888. Decided May 14, 1888.

APPEAL from a judgment of the Supreme Court of the District of Columbia refusing, upon writ of *habeas corpus*, to discharge appellant, who was convicted in the Police Court of the District of Columbia of the crime of conspiracy, found guilty by the court and sentenced to pay a fine or be imprisoned, and upon which sentence he was imprisoned. *Reversed.*

The facts are fully stated in the opinion.

Messrs. **J. H. Ralston** and *Chas S. Moore*, for appellant and petitioner:

The crime of conspiracy is an infamous crime, only cognizable upon indictment or presentation by a grand jury.

U. S. v. *Buell*, 1 MacArth. 502.

The Police Court of the District of Columbia, so far as crimes against the United States are concerned, is a United States Court, and its judge should therefore be appointed during good behavior, as directed by the Constitution, instead of for a term of six years.

Rev. Stat. D. C. § 1049; *Dred Scott* v. *Sandford*, 60 U. S. 19 How. 436 (15: 713); *American Ins. Co.* v. *356 Bales of Cotton*, 26 U. S. 1 Pet. 546 (7: 256); *Pollard* v. *Hagan*, 44 U. S. 3 How. 223 (11: 570); *U. S.* v. *More*, 7 U. S. 3 Cranch, 159 (2: 397); *Re Hennick*, 5 Mackey, 503; *Ex parte Milligan*, 71 U. S. 4 Wall. 122 (18: 296); *State* v. *Young*, 3 Kan. 445; *Shafer* v. *Mumma*, 17 Md. 331; *Priddle's Case*, Leach, Cr. Cas. 442.

The constitutional provisions as to jury trial were violated when the police judge refused a jury to petitioner.

Const. art. III, § 2; Fifth Amend; Cooley, Const. Lim. 4th ed. 513, note; *U. S.* v. *Buell*, 1 MacArth. 502; *Re Fry*, 3 Mackey, 137; *Reckner* v *Warner*, 22 Ohio St. 275; *State* v. *Brennan's Liquors*, 25 Conn. 278; *Beers* v *Beers*, 4 Conn. 535; *Steuart* v *Baltimore*, 7 Md. 500; *Biddle* v. *Commonwealth*, 13 Serg. & R. 405; *Emporia* v. *Volmer*, 12 Kan. 622; *McGear* v. *Woodruff*, 33 N. J. L. 213; Dill. Mun. Corp. 3d ed. § 411; *State* v *Young*, 3 Kan. 445; *Shafer* v *Mumma*, 17 Md. 331; *Hurtado* v. *California*, 110 U. S. 516 (28: 232); *Emerick* v *Harris*, 1 Binn. 416; *Murphy* v. *People*, 2 Cow. 815; *Jones* v *Robbins*, 8 Gray, 342; *Sullivan* v. *Adams* 3 Gray, 477; *Hodges* v *Easton*, 106 U. S. 412 (27: 171); *Flint River Steamboat Co.* v *Foster*, 5 Ga. 206; *Baylis* v. *Travelers Ins. Co.* 118 U. S. 321 (28: 990); *People* v. *O'Neil*, 48 Cal. 257; *Bell* v. *State*, 44 Ala. 393; *Jackson* v. *State*, 6 Blackf. 461; *Cancemi* v. *People*, 18 N. Y. 128; *Carpenter* v. *State*, 4 How. (Miss). 163; *Bowles* v. *State*, 5 Sneed, 360; *Norval* v. *Rice*, 2 Wis. 22: *Doebler* v. *Commonwealth*, 3 Serg. & R. 237; *Re Staff*, 63 Wis. 292; *Bank of Columbia* v. *Okely*, 17 U. S. 4 Wheat. 235 (4: 559).

Mr. **Wm. A. Maury**, *Asst. Atty-Gen.*, for appellee:

The conspiracy laid in the information is not an infamous crime within the meaning of the Fifth Amendment of the Constitution.

Ex parte Wilson, 114 U. S. 417 (29: 89); *Mackin* v. *U. S.* 117 U. S. 348 (29: 909).

Constitutional guaranty of trial by jury has not been denied.

Holmes v. *Jennison*, 39 U. S. 14 Pet. 571 (10: 594); *Bank of Columbia* v. *Okely*, 17 U. S. 4 Wheat. 244 (4: 561); *Edwards* v. *State*, 45 N. J. L. 419; Rev. Stat. D. C. § 1049; 1 Dill. Mun. Corp. § 367; *Emporia* v. *Volmer*, 12 Kan. 622; *Jones* v. *Robbins*, 8 Gray, 329; *Commonwealth* v *Whitney*, 108 Mass. 5; Cooley, Const. Lim. 5th ed. p. 410, note 5, p. 507; *Dillingham* v. *State*, 5 Ohio. St. 280; Sedgw. Stat. & Const. L. 491, and notes; *Tennessee* v. *Sneed*, 96 U. S. 74 (24: 612); *Terry* v. *Anderson*, 95 U. S. 633 (24: 366); *Antoni* v. *Greenhow*, 107 U. S. 775 (27: 471); *Byers* v. *Commonwealth*, 42 Pa. 89; *McGear* v. *Woodruff*, 33 N. J. L. 213.

Mr. Justice **Harlan** delivered the opinion of the court:

This is an appeal from a judgment refusing, upon writ of *habeas corpus*, to discharge the appellant from the custody of the appellee as Marshal of the District of Columbia. It appears that by an information filed by the United States in the Police Court of the District, the petitioner, with others, was charged with the crime of conspiracy, and having been found guilty by the court was sentenced to pay a fine of $25, and upon default in its payment to suffer imprisonment in jail for the period of thirty days. He perfected an appeal to the Supreme Court of the District, but having subsequently withdrawn it, and having refused to pay the fine imposed upon him, he was committed to the custody of the Marshal, to the end that the sentence might be carried into effect. [541]

The contention of the petitioner is that he is restrained of his liberty in violation of the Constitution. The various grounds of this contention will be considered, so far as it is necessary to do so, after we shall have ascertained the precise nature of the offense of which the petitioner was found guilty.

The information shows that one Franz Krause, Louis Naecker, August Naecker, Charles Arndt, Louis Naecker, Jr., Herman Feige, Gustave A. Bruder, Fritz Boetcher, Herman Arndt, Julius Schultz, Louis Brandt, Casper Windus, Ernest Arndt, and Christian Feige were, during the months of July and August, 1887, residents of this District, each pursuing the calling of a musician;

That, during those months, there was in the District an association or organization of musicians, by the name of "The Washington Musical Assembly, No. 4308, K. of L.," containing one hundred and fifty members, and a

branch of a larger association known as "The Knights of Labor of America," extending throughout the United States, and having a membership of five hundred thousand persons, of which ten thousand were residents of this District;

That, during the period named, Edward C. Linden, Louis P. Wild, John N. Pistorio, James C. Callan (the appellant), Joseph B. Caldwell, George N. Sloan, John Fallon, Anton Fischer and Frank Pistorio were members of the said local assembly, each pursuing the calling of a musician;

That, on the 17th of July, 1887, said local association imposed upon Franz Krause, one of its members, two fines, one of $25 and the other of $50, which he refused to pay upon the ground that they were illegal; and

That said Linden, Wild, Pistorio, Callan, Caldwell, Sloan, Fallon, Fischer, with sundry other persons, whose names were unknown, did, on the 7th day of August, 1887, unlawfully and maliciously combine, conspire and confederate together to extort from Krause the sum [542] of $75 on account of said fines; to prevent the parties first above named—Krause, Naecker, and others—and each of them, from pursuing their calling and trade anywhere in the United States; and to "boycott," injure, molest, oppress, intimidate, and reduce to beggary and want, not only said persons and each of them, but any person who should work with or for them, or should employ them or either of them.

The information charges that the manner in which the defendants, so conspiring, proposed to effect said result, was to refuse to work as musicians, or in any other capacity, with or for the persons first above named, or with or for any person, firm or corporation, working with or employing them; to request and procure all other members of said organizations, and all other workmen and tradesmen, not to work as musicians, or in any capacity, with or for them, or either of them; or for any person, firm or corporation that employed or worked with them or either of them, and to warn and threaten every person, firm or corporation that employed or proposed to employ the said persons, or either of them, that if they did not forthwith cease to so employ them and refuse to employ them, and each of them, such person, firm or corporation, so warned and threatened, would be deprived of any custom or patronage, as well from the persons so combining and conspiring as from all other members of said organization in and out of the District.

The information further charges that, on the 8th day of August, 1887, the said persons, among whom was the appellant, in execution of the purpose of said conspiracy, combination and confederacy, sent and delivered to each member of "The Washington Musical Assembly, No. 4308, K. of L.," and to divers other persons in the District, whose names are unknown, a certain printed circular of the tenor following:

"SANCTUARY WASHINGTON MUSICAL ASSEMBLY, 4308, K. OF L.,

"WASHINGTON, D. C., *August* 8, 1887.

"Dear Sir and Brother: In accordance with a resolution of this assembly and in compliance with the constitution and by-laws of the order, you are hereby notified that the following named members of this assembly are hereby [543] suspended for having performed with F. Krause in direct violation of the official notice of said Krause's suspension from this assembly. You will, therefore, not engage or perform, directly or indirectly, with any of them—Louis Naecker, August Naecker, Charles Arndt, Louis Naecker, Jr., Herman Feige, Gus. A. Bruder, Fritz Boetcher, Herman Arndt, Julius Schultz, Louis Brandt, Casper Windus, Ernest Arndt, Christian Feige.

"By order of the Assembly.

"[SEAL.] E. C. LINDEN, JR.,
Recording Sec'y."

To this information the defendants interposed a demurrer, which was overruled. They united in requesting a trial by jury. That request was denied, and a trial was had before the court, without the intervention of a jury, and with the result already stated.

It is contended by the appellant that the Constitution of the United States secured to him the right to be tried by a jury, and, that right having been denied, the police court was without jurisdiction to impose a fine upon him, or to order him to be imprisoned until such fine was paid. This precise question is now, for the first time, presented for determination by this court. If the appellant's position be sustained, it will follow that the statute (Rev. Stat. Dist. Col. § 1064) dispensing with a petit jury, in prosecutions by information in the police court, is inapplicable to cases like the present one.

The third article of the Constitution provides that "the trial of all crimes, except in cases of impeachment, shall be by jury; and such trial shall be held in the State where the said crime shall have been committed; but when not committed within any State, the trial shall be at such place or places as the Congress may by law have directed." The Fifth Amendment provides that no person shall "be [548] deprived of life, liberty or property without due process of law." By the Sixth Amendment it is declared that "in all criminal prosecutions the accused shall enjoy the right to a speedy and public trial, by an impartial jury of the State and district wherein the crime shall have been committed, which district shall have been previously ascertained by law, and to be informed of the nature and cause of the accusation; to be confronted with the witnesses against him; to have compulsory process for obtaining witnesses in his favor, and to have the assistance of counsel for his defense."

The contention of the appellant is that the offense with which he is charged is a "crime" within the meaning of the third article of the Constitution, and that he was entitled to be tried by a jury; that his trial by the police court, without a jury, was not "due process of law" within the meaning of the Fifth Amendment; and that, in any event, the prosecution against him was a "criminal prosecution," in which he was entitled by the Sixth Amendment, to a speedy and public trial by an impartial jury.

The contention of the government is that the Constitution does not require that the right of trial by jury shall be secured to the people of the District of Columbia; that the original

provision, that when a crime was not committed within any State "the trial shall be at such place or places as the Congress may by law have directed," had, probably, reference only to offenses committed on the high seas; that, in adopting the Sixth Amendment, the people of the States were solicitous about trial by jury in the States and nowhere else, leaving it entirely to Congress to declare in what way persons should be tried who might be accused of crime on the high seas, and in the District of Columbia, and in places to be thereafter ceded for the purposes, respectively, of a seat of government, forts, magazines, arsenals, and dockyards; and, consequently, that that amendment should be deemed to have superseded so much of the third article of the Constitution as relates to the trial of crimes by a jury.

Upon a careful examination of this position [549] we are of opinion that it cannot be sustained without violence to the letter and spirit of the Constitution.

The third article of the Constitution provides for a jury in the trial of "all crimes, except in cases of impeachment." The word "crime," in its more extended sense, comprehends every violation of public law; in a limited sense, it embraces offenses of a serious or atrocious character. In our opinion, the provision is to be interpreted in the light of the principles which, at common law, determined whether the accused, in a given class of cases, was entitled to be tried by a jury. It is not to be construed as relating only to felonies, or offenses punishable by confinement in the penitentiary. It embraces as well some classes of misdemeanors, the punishment of which involves or may involve the deprivation of the liberty of the citizen. It would be a narrow construction of the Constitution to hold that no prosecution for a misdemeanor is a prosecution for a "crime" within the meaning of the third article, or a "criminal prosecution" within the meaning of the Sixth Amendment. And we do not think that the amendment was intended to supplant that part of the third article which relates to trial by jury. There is no necessary conflict between them. *Mr. Justice* Story says that the amendment "in declaring that the accused shall enjoy the right to a speedy and public trial by an impartial jury of the State or district wherein the crime shall have been committed (which district shall be previously ascertained by law), and to be informed of the nature and cause of the accusation, and to be confronted with the witnesses against him, does but follow out the established course of the common law in all trials for crimes." Story, Const. § 1791. And as the guarantee of a trial by jury, in the third article, implied a trial in that mode and according to the settled rules of the common law, the enumeration, in the Sixth Amendment, of the rights of the accused in criminal prosecutions is to be taken as a declaration of what those rules were, and is to be referred to the anxiety of the people of the States to have in the supreme law of the land, and so far as the agencies of the General Government were concerned, a full and dis- [550] tinct recognition of those rules, as involving the fundamental rights of life, liberty, and property. This recognition was demanded and secured for the benefit of all the people of the United States, as well those permanently or temporarily residing in the District of Columbia, as those residing or being in the several States. There is nothing in the history of the Constitution or of the original amendments, to justify the assertion that the people of this District may be lawfully deprived of the benefit of any of the constitutional guarantees of life, liberty, and property—especially of the privilege of trial by jury in criminal cases. In the Draft of a Constitution reported by the Committee of Five on the 6th of August, 1787, in the convention which framed the Constitution, the 4th section of article XI read that "the trial of all criminal offenses (except in cases of impeachment) shall be in the States where they shall be committed; and shall be by jury." 1 Elliott's Deb. 2d ed. p. 262. But that article was, by unanimous vote, amended so as to read: "The trial of all crimes (except in cases of impeachment) shall be by jury; and such trial shall be held in the State where the said crimes shall have been committed; but when not committed within any State, then the trial shall be at such place or places as the Legislature may direct." Id. p. 300. The object of thus amending the section, Mr. Madison says, was "to provide for trial by jury of offenses committed out of any State." 3 Madison Papers, p. 144. In *Reynolds* v. *United States*, 98 U. S. 154 [25: 246], it was taken for granted that the Sixth Amendment of the Constitution secured to the people of the Territories the right of trial by jury in criminal prosecutions; and it had been previously held in *Webster* v. *Reid*, 52 U. S. 11 How. 437, 460 [13: 761, 770], that the Seventh Amendment secured to them a like right in civil actions at common law. We cannot think that the people of this District have, in that regard, less rights than those accorded to the people of the Territories of the United States.

It is next insisted that the constitutional guarantee of trial by jury in all criminal prosecutions—even supposing it to exist for the people of the District—has not been denied. Passing by so much of the argument as rests upon the slight difference in phraseology between the third ar- [551] ticle and the Sixth Amendment—the former declaring that the trial of all crimes "shall be" by jury, and the latter that the accused shall "enjoy the right" to trial in that mode—we come to the consideration of the main proposition advanced on behalf of the government, upon this branch of the case. It is this: that the requirements of the Constitution are fully met, where the accused is accorded, at some stage of the prosecution against him, the right of trial by jury. Such right, it is argued, is sufficiently recognized in the following sections of the Revised Statutes of the District of Columbia, defining and regulating the power and jurisdiction of the police court:

"Sec. 1073. Any party deeming himself aggrieved by the judgment of the police court may appeal to the supreme court.

"Sec. 1074. In all appeals the party applying for appeal shall enter into recognizance, with sufficient surety to be approved by the judge, for his appearance at the criminal term of the supreme court then in session, or at the next term thereof if the criminal term be not then in session, there to prosecute the appeal

and to abide by the judgment of the supreme court.

"Sec. 1075. Upon such recognizance being given all further proceedings in police court shall be stayed."

"Sec. 1077. Upon the failure of any party appealing from the judgment of the police court to the supreme court to enter into recognizance, as provided for in section ten hundred and seventy-four, he shall be committed to jail to await his trial upon his appeal, and the trial shall be had in the supreme court as though such recognizance had been entered into."

"Sec. 773. Appeals from the police court shall be tried on the information filed in the court below, certified to supreme court, by a jury in attendance thereat, as though the case had originated therein, and the judgment in the supreme court shall be final in the case."

These provisions undoubtedly secure the right of appeal from the police court to the Supreme Court of the District, and a trial by jury in the latter court. But the fact remains that [552] the accused may, under the statute, be tried in the court of original jurisdiction, upon the issue of guilt or innocence; and by its judgment, unless he gives security for his appearance in another court, he may be deprived of his liberty. The police court is not, in such cases, an examining court merely, but a trial court, in the fullest sense of those words.

According to many adjudged cases, arising under Constitutions which declare, generally, that the right of trial by jury shall remain inviolate, there are certain minor or petty offenses that may be proceeded against summarily, and without a jury; and, in respect to other offenses, the constitutional requirement is satisfied if the right to a trial by jury in an appellate court is accorded to the accused. *Byers* v. *Commonwealth*, 42 Pa. 89, 94, affords an illustration of the first of the above classes. It was there held that while the founders of the Commonwealth of Pennsylvania brought with them to their new abode the right of trial by jury, and while that mode of trial was considered the right of every Englishman, too sacred to be surrendered or taken away, "summary convictions for petty offenses against statutes were always sustained, and they were never supposed to be in conflict with the common-law right to a trial by jury." So, in *State* v. *Glenn*, 54 Md. 573, 600, 605, it was said that "in England, notwithstanding the provision in the Magna Charta of King John, art. 46, and in that of 9 Hen. 3, chap. 29, which declares that no freeman shall be taken, imprisoned, or condemned but by lawful judgment of his peers, or by the law of the land, it has been the constant course of legislation in that kingdom, for centuries past, to confer summary jurisdiction upon justices of the peace for the trial and conviction of parties for minor and statutory police offenses. * * * And when it is declared that the party is entitled to a speedy trial by an impartial jury, that must be understood as referring to such crimes and accusations as have, by the regular course of the law and the established modes of procedure, as theretofore practiced, been the subjects of jury trial. It could never have been intended to embrace every species of accusation involving either criminal or penal consequences." So, [553] also, in New Jersey, where the Constitution guaranteed that "the right of trial by jury shall remain inviolate," the court said: "Extensive and summary police powers are constantly exercised in all the States of the Union for the repression of breaches of the peace and petty offenses, and these statutes are not supposed to conflict with the constitutional provisions securing to the citizen a trial by jury. * * * This constitutional provision does not prevent the enforcement of the by-laws of a municipal corporation without a jury trial." *McGear* v. *Woodruff*, 33 N. J. L. 213. In *State* v. *Conlin*, 27 Vt. 318, 323, the court sustains the right of the Legislature to provide for the punishment of minor offenses, having reference to the internal police of the State, "with fine only, or imprisonment in the county jail for a brief and limited period." See also *Williams* v. *Augusta*, 4 Ga. 509.

The doctrines of many of the cases are thus summarized by Mr. Dillon in his work on Municipal Corporations (Vol. I, § 433): "Violations of municipal by-laws proper, such as fall within the description of municipal police regulations, as, for example, those concerning markets, streets, water works, city officers, etc., and which relate to acts and omissions that are not embraced in the general criminal legislation of the State, the Legislature may authorize to be prosecuted in a summary manner, by and in the name of the corporation, and need not provide for a trial by jury. Such acts and omissions are not crimes or misdemeanors to which the constitutional right of trial by jury extends."

The same author says, in respect to the other class of cases above referred to: "It is, however, the prevailing doctrine, that although the charge or matter in the municipal or local courts be one in respect of which the party is entitled to a trial by jury, yet if by an appeal, clogged with no unreasonable restrictions, he can have such a trial as a matter of right in the appellate court, this is sufficient, and his constitutional right to a jury trial is not invaded by the summary proceeding in the first instance." Vol. I, § 439. See also *Emporia* v. *Volmer*, 12 Kan. 622, 630. Perhaps the strongest expressions in this direction are to be found in *Jones* v. *Robbins*, 8 Gray, 329, 341, in which it was said, [554] on behalf of a majority of the Supreme Judicial Court of Massachusetts: "And we believe it has been generally understood and practiced here and in Maine, and perhaps in other States having a similar provision, that as the object of the clause is to secure a benefit to the accused, which he may avail himself of or waive, at his own election; and as the purpose of the provision is to secure the right, without directing the mode in which it shall be enjoyed, it is not violated by an Act of legislation which authorizes a single magistrate to try and pass sentence, provided the Act contains a provision that the party shall have an unqualified and unfettered right of appeal, and a trial by jury in the appellate court, subject only to the common liability to give bail, or to be committed to jail, to ensure his appearance and to abide the judgment of the court appealed to."

Somewhat different views have been expressed by the District Court of the United States for the Southern District of New York. Charles A. Dana having been charged by information in the Police Court of the District of Columbia

with having published a libel, and having been arrested in New York, the warrant to authorize his being brought here was refused and he was discharged, upon the ground that, if brought to this District, he would be tried in a manner forbidden by the Constitution. *Mr. Justice* Blatchford said in *Re Dana*, 7 Ben. 1: "Even if it were to be conceded, that notwithstanding the provision in the Constitution that 'the trial of all crimes, except in cases of impeachment,' shall be by jury, Congress has the right to provide for the trial, in the District of Columbia, by a court without a jury, of such offenses as were, by the laws and usages in force at the time of the adoption of the Constitution, triable without a jury, it is a matter of history, that the offense of libel was always triable, and tried, by a jury. It is, therefore, one of the crimes which must, under the Constitution, be tried by a jury. The Act of 1870 provides that the information in this case shall not be tried by a jury, but shall be tried by a court. It is true that it gives to the defendant, [555] after judgment, if he deems himself aggrieved thereby, the right to appeal to another court, where the information must be tried by a jury. But this does not remove the objection. If Congress has the power to deprive the defendant of his right to a trial by jury, for one trial, and to put him if convicted, to an appeal to another court, to secure a trial by jury, it is difficult to see why it may not also have the power to provide for several trials, by a court, without a jury, on several successive convictions, before allowing a trial by a jury. In my judgment, the accused is entitled, not to be first convicted by a court and then to be acquitted by a jury, but to be convicted or acquitted in the first instance by a jury."

Without further reference to the authorities, and conceding that there is a class of petty or minor offenses, not usually embraced in public criminal statutes, and not of the class or grade triable at common law by a jury, and which, if committed in this District, may, under the authority of Congress, be tried by the court and without a jury, we are of opinion that the offense with which the appellant is charged does not belong to that class. A conspiracy such as is charged against him and his codefendants is by no means a petty or trivial offense. "The general rule of the common law," the Supreme Judicial Court of Massachusetts said in *Commonwealth* v. *Hunt*, 4 Met. 111, 121, "is that it is a criminal and indictable offense for two or more to confederate and combine together, by concerted means, to do that which is unlawful or criminal, to the injury of the public, or portions or classes of the community, or even the rights of an individual." In *State* v. *Burnham*, 15 N. H. 401, it was held that "combinations against law or against individuals are always dangerous to the public peace and to public security. To guard against the union of individuals to effect an unlawful design is not easy, and to detect and punish them is often extremely difficult." Hawkins, in discussing the nature of conspiracies as offenses against public justice, and referring especially to the Statute of 21 Edw. I, relating to confederacies to procure the indictment of an innocent person, says that "notwithstanding the injury intended [556] to the party against whom such a confederacy is formed may perhaps be inconsiderable, yet the association to pervert the law, in order to procure it, seems to be a crime of a very high nature, and justly to deserve the resentment of the law." 1 Hawk. P. C. chap. 27, § 3. So in *Reg.* v. *Parnell*, 14 Cox, Cr. Cas. 508, 514, it was observed that an "agreement to effect an injury or wrong to another by two or more persons is constituted an offense, because the wrong to be effected by a combination assumes a formidable character. When done by one alone it is but a civil injury, but it assumes a formidable or aggravated character when it is to be effected by the powers of the combination." Tomlin says that "the word conspiracy was formerly used almost exclusively for an agreement of two or more persons falsely to indict one, or to procure him to be indicted, of felony," but that "now it is no less commonly used for the unlawful combinations of journeymen to raise their wages, or to refuse working, except on certain stipulated conditions." Toml. Law Dict. title *Conspiracy*. See also *Commonwealth* v. *Carlisle*, Brightly, 40; 3 Whart. Cr. L. § 2322; 2 Archb. Cr. Pr. & Pl. Pom. ed. note, p. 1830.

These authorities are sufficient to show the nature of the crime of conspiracy at common law. It is an offense of a grave character, affecting the public at large, and we are unable to hold that a person charged with having committed it in this District is not entitled to a jury, when put upon his trial. The jurisdiction of the police court, as defined by existing statutes, does not extend to the trial of infamous crimes or offenses punishable by imprisonment in the penitentiary. But the argument made in behalf of the government implies that if Congress should provide the police court with a grand jury, and authorize that court to try, without a petit jury, all persons indicted—even for crimes punishable by confinement in the penitentiary—such legislation would not be an invasion of the constitutional right of trial by jury, provided the accused, after being tried and sentenced in the police court, is given an unobstructed right of appeal to, and trial by jury in, another court to which the case may be taken. We cannot assent to that interpretation of the Constitution. Except in that class or [557] grade of offenses called petty offenses, which, according to the common law, may be proceeded against summarily in any tribunal legally constituted for that purpose, the guarantee of an impartial jury to the accused in a criminal prosecution, conducted either in the name, or by or under the authority, of the United States, secures to him the right to enjoy that mode of trial from the first moment, and in whatever court, he is put on trial for the offense charged. In such cases a judgment of conviction, not based upon a verdict of guilty by a jury, is void. To accord to the accused a right to be tried by a jury in an appellate court, after he has been once fully tried, otherwise than by a jury, in the court of original jurisdiction, and sentenced to pay a fine or be imprisoned for not paying it, does not satisfy the requirements of the Constitution. When, therefore, the appellant was brought before the Supreme Court of the District, and the fact was disclosed that he had been adjudged guilty of the crime of conspiracy charged in the information in this case,

without ever having been tried by a jury, he should have been restored to his liberty.

For the reasons stated, the judgment is reversed, and the cause remanded with directions to discharge the appellant from custody.

---

[411] FRANK RATTERMAN, Treasurer of HAMILTON COUNTY, OHIO, *Appt.*,
v.
WESTERN UNION TELEGRAPH COMPANY.

WESTERN UNION TELEGRAPH COMPANY, *Appt.*,
v.
FRANK RATTERMAN, Treasurer of HAMILTON COUNTY, OHIO.

(See S. C. Reporter's ed. 411-428.)

Tax on telegraph company—interstate commerce—apportionment of tax—injunction.

1. Where the subjects of taxation can be separated, so that that which arises from interstate commerce can be distinguished from that which arises from commerce wholly within the State, the court will act upon this distinction, and will restrain the tax on interstate commerce, while permitting the State to collect that upon commerce wholly within its own territory.

2. The telegraph is an instrument of commerce.

3. A single tax, assessed under the statutes of Ohio, upon the receipts of a telegraph company which were derived partly from interstate commerce, and partly from commerce within the State, but which were returned and assessed in gross and without separation or apportionment, is not wholly invalid, but is invalid only in proportion to the extent that such receipts were derived from interstate commerce.

4. The collection of the taxes on that portion of the receipts derived from interstate commerce should be enjoined, and the treasurer should be permitted to collect the other tax upon property of the company and upon the receipts derived from commerce entirely within the limits of the State.

[Nos. 1360, 1361.]

Argued March 21, 1888. Decided May 14, 1888.

CROSS appeals from a decree of the Circuit Court of the United States for the Southern District of Ohio, on certificate of division in opinion in reference to the validity of a tax, assessed under the statutes of Ohio, upon the receipts of a telegraph company, derived partly from interstate commerce and partly from commerce within the State, but which were assessed in gross and without separation or apportionment. *Affirmed.*

The facts are fully stated in the opinion.

Messrs. Wm. M. Ramsey, Willard Brown, Charles W. Wells and **Lawrence Maxwell, Jr.**, for the Telegraph Company:

Under section 693, U. S. Rev. Stat. an appeal may be taken without respect to the amount involved.

Dow v. *Johnson*, 100 U. S. 158 (25: 632); *Waterville* v. *Van Slyke*, 116 U. S. 699 (29: 772).

Section 699, sub. 4, Rev. Stat. gives this court jurisdiction without regard to the sum or value in dispute.

Bowman v. *Chicago & N. W. R. Co.* 115 U. S. 611, 615 (29: 502, 504).

The tax is invalid as a regulation of interstate commerce.

Philadelphia & S. Steamship Co. v. *Pennsylvania*, 122 U. S. 326 (30: 1200); *Fargo* v. *Michigan*, 121 U. S. 230 (30:888); *W. U. Tel. Co.* v. *Texas*, 105 U. S. 460 (26: 1067).

It is not a tax on property; as such it would be invalid under the Constitution of Ohio.

State v. *Hipp*, 38 Ohio St. 225; *State* v. *Frame*, 39 Ohio St. 399, 414; *W. U. Tel. Co.* v. *Mayer*, 28 Ohio St. 521; *Gloucester Ferry Co.* v. *Pennsylvania*, 114 U. S. 196 (29: 158); *Paul* v. *Virginia*, 75 U. S. 8 Wall. 168 (19: 357); *Pensacola Tel. Co.* v. *W. U. Tel. Co.* 96 U. S. 1, 12 (24: 708, 711).

The entire law falls.

W. U. Tel. Co. v. *Texas, supra; State* v. *Perry County*, 5 Ohio St. 497, 506; *Warren* v. *Charlestown*, 2 Gray, 84; *Allen* v. *Louisiana*, 103 U. S. 80, 84 (26: 318, 319); *W. U. Tel. Co.* v. *Mayer*, 28 Ohio St. 521.

The Western Union Telegraph Company is one of the postal agencies of the Federal Government. It is entitled, as such postal agent, to carry on its operations within the State of Ohio, and the State cannot prohibit it from so doing nor tax it for the privilege.

McCulloch v. *Maryland*, 17 U. S. 4 Wheat.

NOTE.—*Interstate Commerce.*

The question as to the extent of the exclusive power conferred upon Congress by article 1, section 8, of the Federal Constitution "to regulate commerce * * * among the several States," and the consequent inhibition of any interference with that subject by the States, while always one of the most important sources of conflict between the Federal and State jurisdictions, has attained additional prominence through the action of Congress in asserting authority to directly control common carriers engaged in interstate commerce, through the enactment of the Act of February 4, 1887, "to Regulate Commerce."

Among recent cases on this subject the most important, outside of the United States Supreme Court, are probably those of Stockton v. Baltimore & N.Y. R. Co., before *Mr. Justice* Bradley, sitting as judge of the Circuit Court for the District of New Jersey, and Decker v. Baltimore & N. Y. R. Co., before *Circuit Judge* Wallace, in the Southern District of New York, reported in 1 Interstate Commerce Rep. 411, 434. The authorities upon the power of Congress to regulate interstate commerce are collected and reviewed in these cases, and the rules applicable to the question, as enunciated by the decisions of the United States Supreme Court, are restated.

These cases hold: (1) that the Act of Congress, approved June 16, 1886, entitled "An Act to Authorize the Construction of a Bridge across the Staten Island Sound, Known as Arthur Kill," etc., is valid and constitutional under the power of Congress to regulate commerce among the States; (2) that in the pursuit of business authorized by the Government of the United States and under its protection, corporations of other States cannot be prohibited or obstructed by any State; (3) that in carrying on foreign and interstate commerce, corporations, equally with individuals, are within the protection of the commercial power of Congress, and cannot be molested in another State by state burdens or impediments; (4) that the power of Congress is supreme over the whole subject of interstate commerce, unimpeded and unembarrassed by state lines or state laws; (5) that the power to regulate commerce between the States extends not only to the control of the navigable waters of the country and the lands under them, for the purpose of navigation, but for the purpose of erecting piers, bridges and all other instrumentalities of commerce which in the judgment of Congress may be necessary or expedient; and (6) that Congress can lawfully confer upon a private corporation the capacity to occupy navigable waters within a State and appropriate the soil under them for the purposes of interstate commerce, without the consent of the State.

The question of indirect interference with inter-

436 (4: 608); *Osborn* v. *Bank of U. S.* 22 U. S. 9 Wheat. 738, 867 (6: 204, 234).

A tax on internal receipts is invalid.

Union Pac. R. R. Co v. *Peniston*, 85 U. S. 18 Wall. 5 (21: 787).

Complainant is a general postal agent of the government.

Pensacola Tel. Co. v. *W. U. Tel. Co.* 96 U. S. 1, 9 (24: 708, 710).

Messrs. **David K. Watson,** *Atty-Gen. of Ohio, Wm. A. Davidson, County Solicitor, Hamilton County,* and **Thomas McDougall,** for Frank Ratterman, Treasurer:

The constitutionality of a state tax is to be determined by the subject upon which the burden is laid.

State Freight Tax Case, 82 U. S. 15 Wall. 272 (21: 160); *Adler* v. *Whitbeck*, 7 West. Rep. 201, 44 Ohio. St. 539; *Philadelphia & S. Steamship Co.* v. *Pennsylvania*, 122 U. S. 336 (30: 1201).

The State may tax business.

People v. *Thurber*, 13 Ill. 554; *State* v. *Hipp*, 38 Ohio St. 199; *W. U. Tel. Co.* v. *Mayer*, 28 Ohio St. 521; *Delaware R. R. Tax*, 85 U. S. 18 Wall. 231 (21: 896).

The States have authority to tax the estate, real and personal, of all their corporations, including carrying companies.

W. U. Tel. Co. v. *Mayer, supra; State Tax on Railway Gross Receipts*, 82 U. S. 15 Wall. 284 (21: 164); *Delaware R. R. Tax*, 85 U. S. 18 Wall. 206 (21: 888); *Erie R. Co.* v. *Pennsylvania*, 88 U. S. 21 Wall. 492 (22: 595); *Kneeland* v. *Milwaukee*, 15 Wis. 691; *Fargo* v. *Michigan*, 121 U. S. 230 (30: 888); *Philadelphia & S. Steamship Co.* v. *Pennsylvania*, 122 U. S. 326 (30: 1200); *Moran* v. *New Orleans*, 112 U. S. 69 (28: 653); *Welton* v. *Missouri*, 91 U. S. 275 (23: 347); *Cook* v. *Pennsylvania*, 97 U. S. 566 (24: 1015); *State Tonnage Tax Cases*, 79 U. S. 12 Wall. 204 (20: 370); *Webber* v. *Virginia*, 103 U. S. 344 (26:565); *Peete* v. *Morgan*, 86 U. S. 19 Wall. 581 (22: 201); *Cannon* v. *New Orleans*, 87 U. S. 20 Wall. 577 (22: 417); *Inman Steamship Co.* v. *Tinker*, 94 U. S. 238 (24: 118); *People* v. *N. Y. Tax Comrs.* 67 U. S. 2 Black, 620 (17: 451); *Bank Tax Case*, 69 U. S. 2 Wall. 200 (17: 793); *Society for Savings* v. *Coite*, 73 U. S. 6 Wall. 594 (18: 897); *Provident Sav. Inst.* v. *Massachusetts*, Id. 611 (18: 907).

The Legislature of Ohio intended to tax the business done wholly within the State. Its authority to tax the receipts from that business cannot be questioned.

Philadelphia & S. Steamship Co. v. *Pennsylvania*, 122 U. S. 339 (30: 1202); *Fargo* v. *Michigan*, 121 U. S. 241 (30: 893); *W. U. Tel. Co.* v. *Texas*, 105 U. S. 465 (26: 1068).

Mr. Justice **Miller** delivered the opinion of the court: [412]

These are cross appeals from a decree of the Circuit Court for the Southern District of Ohio, Western Division.

The suit was begun by a bill of complaint, filed by the Western Union Telegraph Company against Frank Ratterman, Treasurer of Hamilton County, in the State of Ohio. As the bill is not very long, it is here presented in full:

"To the Judges of the Circuit Court of the United States for the Southern District of Ohio, Western Division:

---

state commerce, through state legislation on the subject of taxation, has frequently arisen and has been passed upon in the following recent cases:

A state tax upon gross receipts of railroads for carriage of freight or passengers into, out of, or through, the State is a tax upon commerce among the States, and therefore void. Fargo v. Stevens (Michigan), 121 U. S. 230 (30: 888); S. C. 1 Interstate Com. Rep. 51; Pickard v. Pullman Southern Car Co. (Tennessee) 117 U. S. 34 (29: 785). A state tax (Indiana) upon earnings of a sleeping car company engaged in transporting passengers from one State to another is void. State v. Woodruff Sleeping & Parlor Coach Co, 13 West. Rep. 311; S.C. 1 Interstate Com. Rep. 798.

A state tax (Pennsylvania) upon a steamship company upon gross receipts from transportation between different States and to and from foreign countries, is unconstitutional. Philadelphia & S. M. Steamship Co. v. Pennsylvania, 122 U. S. 326 (30: 1200); S. C. 1 Interstate Com. Rep. 308.

The capital stock of a foreign ferry company engaged in interstate traffic is not taxable by a State. Gloucester Ferry Co. v. Pennsylvania, 114 U. S. 196 (29: 158); S. C. 1 Interstate Com. Rep. 382 and note.

A state statute, intended to regulate or to tax, or to impose any other restriction upon the transmission of persons or property or telegraphic messages from one State to another, is not within that class of legislation which the States may enact in the absence of legislation by Congress; and such statutes are void even as to that part of such transmission which may be within the States. Wabash, St. L. & P. R. Co. v. Illinois, 118 U. S. 557 (30: 244); S. C. 1 Interstate Com. Rep. 31.

A state license tax upon commercial travelers, the agents of merchants residing out of the State, is invalid. Robbins v. Shelby County Taxing Dist. (Tennessee) 120 U. S. 489 (30: 694); S. C. 1 Interstate Com. Rep. 45; Corson v. Maryland, 120 U. S. 502 (30: 699); S. C. 1 Interstate Com. Rep. 50; *Re* Hennick (Dist. of Columbia), 7 Cent. Rep. 357, 5 Mackey, 489; S. C. 1 Interstate Com. Rep. 66; State v. Pratt (Vermont), 4 New Eng. Rep. 357, 59 Vt. 590; S. C. 1 Interstate Com. Rep. 299; Alabama v. Agee, 2 Interstate Com. Rep. 21.

Other recent decisions upon the subject of interstate commerce are as follows:

Intercourse by telegraph between the States is interstate commerce, and a State has no authority to regulate it; hence, an Indiana statute regulating the mode in which messages sent by telegraph companies doing business in that State shall be delivered in other States, is void. Western Union Tel. Co. v. Pendleton, 122 U. S. 347 (30: 1187); S. C. 1 Interstate Com. Rep. 306.

Section 1553 of the Iowa Code, as amended in 1886, forbidding any common carrier to bring within that State any intoxicating liquors from any other State, without first having the certificate therein required, is a regulation of commerce among the States and void. Bowman v. Chicago & N. W. R. Co. 125 U. S. 465 (31: 700); S. C. 1 Interstate Com. Rep. 823.

Transportation of property from one State to another is interstate commerce, whether the carriers engaged in moving it or the vehicles on which it is borne cross the line of the State or not. *Ex parte* Koehler (U. S. C. C. Oreg.); 1 Interstate Com. Rep. 29.

In the absence of interference by Congress a State may carry on works of a local character, although they necessarily affect interstate commerce. Ouachita & M. R. Packet Co. v. Aiken, 121 U. S. 444 (30: 976); S. C. 1 Interstate Com. Rep. 379. See also Gloucester Ferry Co. v. Pennsylvania, *supra*.

Issuing policies of life insurance is not interstate commerce. List v. Pennsylvania, 10 Cent. Rep. 586; S. C. 1 Interstate Com. Rep. 784.

The only limitation upon the power of a State to exclude a foreign corporation from doing business within its limits, or to exact conditions for allowing such corporation to do business there, arises where the corporation is in the employ of the Federal Government or where its business is strictly commerce, interstate or foreign. Pembina Consolidated Silver M. & M. Co. v. Pennsylvania, 125 U. S. 181 (31: 650); S. C. 2 Interstate Com. Rep. 24.

On the subject generally, see the Interstate Commerce Reports, *passim*.

"The Western Union Telegraph Company, a corporation duly organized and existing under the laws of the State of New York and a citizen of said State, brings this its bill against Frank Ratterman, Treasurer of Hamilton County, Ohio, and a citizen of the State of Ohio.

"And thereupon your orator complains and says:

"That its principal office is, and during the times hereinafter mentioned was, in the City of New York; that during said time it had been and now is engaged in the business of receiving and transmitting for hire telegraph messages between different points in the United States, and in the carrying on of said business has offices in the City of Cincinnati and at other points in the County of Hamilton and in the State of Ohio, and has been engaged in the transmission of messages between said offices and other points both within and without the State of Ohio.

"That prior to 1869 your orator accepted in writing the provisions of the Act of Congress of July 4, 1866, 14 U. S. Stat. at L. 221; that your orator's wires, poles, batteries, office furniture and other property in the State of Ohio have been and are taxed like other property in said State; that your orator's telegraph lines cross nearly all of the States of the Union and occupy portions of British America, and that a [413] large amount of the commercial transactions, business, and intercourse of the people is carried on by means of their wires.

"That in the month of May, 1887, your orator, under protest, delivered to the auditor of said county a statement, as required by Revised Statutes of Ohio, section 2778, showing the entire receipts of your orator in said county for the year next preceding, which said gross receipts amounted to the sum of $175,210.88, and were principally for business between points in the State of Ohio and points outside the State of Ohio—that is to say, the receipts of your orator for messages and business pertaining to commerce between the States, and not for messages between different points within the State of Ohio; that thereupon said auditor assessed a tax thereon amounting to five thousand two hundred and six and $\frac{90}{100}$ dollars.

"Your orator says that said tax is illegal and void and in violation of the Constitution of the United States.

"Your orator has offered to the defendant and is ready and willing to pay to him the taxes chargeable against its personal property within said county, but the defendant refuses to accept payment thereof unless your orator also at the same time pays said total assessment for all of said gross receipts; and, unless restrained, the defendant will impose and enforce the penalties for nonpayment of said tax provided for by Revised Statutes of Ohio, section 2843, to the interference, stoppage, and destruction of your orator's business.

"Wherefore your orator prays that the defendant may be required to accept payment of so much of said tax assessment as covers the property of your orator in the said county, and that he may be enjoined by preliminary injunction and by final decree from levying or collecting the balance of said assessment.

"Your orator prays that a writ of subpœna may issue against the defendant, and that your orator may have such other and further relief as it is in equity and good conscience entitled to."

To this bill a general demurrer was filed, which was overruled by the court. The record then proceeds as follows:

"And thereupon it was agreed by and be- [414] tween the complainant and the defendant that the cause be submitted to the court on the bill without further pleading to the same by the defendant, upon the following facts:

"That of the entire receipts mentioned in the bill $142,154.18 were for business done by the plaintiff between its offices in said county and points outside of the State of Ohio—that is, for messages and business pertaining to commerce between the States and not for messages between different points within the State of Ohio, —and that the balance of said receipts, to wit, $33,056.70 was for business between the offices of the plaintiff in said county and other points within the State of Ohio; and that if said receipts had been so separated and apportioned, and said tax had been separately assessed on the basis of such separation and apportionment the amount of said total tax of $5,206.90 apportionable to said receipts for interstate commerce would be $3,931.51, and the amount apportionable to said receipts for business between the offices of the complainant in said county and other points within the State of Ohio would have been $910.40; and that the remainder of said sum of $5,206.90, viz., $364.99, was for tax assessed upon the personal property of the said complainant within the said County of Hamilton aforesaid, namely, upon its instruments, wires, poles and other chattel property which were returned by said complainant to the auditor of said county at a valuation of $18,059.

"That Exhibit 'A,' hereto annexed and made a part of this stipulation, is a copy of the return made by complainant to the auditor of said county in pursuance of the law of the State of Ohio, and that said complainant made no other return and furnished no other information to said auditor at the time of said return, save what is contained in said return.

"That Exhibit 'B,' hereto annexed and made a part hereof, is a copy of the return of the chattel property of said complainant made at the same time to said auditor.

"It is further agreed that the auditor of said county placed on the tax duplicate of said county said sums of $175,210.88, and $18,059 as the personal property of said complainant, to be assessed for taxation in said County of Hamilton, and that the rate of taxation assessed thereupon was the same as was assessed against the personal property listed for taxation by the citizens of said county.

"It is further agreed that complainant, prior to December 20, 1887, offered to pay the tax properly assessable against said return of $18,059 for personal property, but the defendant refused to accept payment of said assessment of $5,206.90 unless the whole were paid. The plaintiff did not disclose to said auditor at the time it made said return what portion, if any, of the gross receipts of its said offices in said county was for interstate commerce.

"It is further agreed that neither said auditor

nor said Treasurer had any actual knowledge that any portion of the returns of said gross receipts was for interstate commerce business, but said officers knew that plaintiff's said business included interstate commerce.

"And the only knowledge said auditor and said Treasurer had of the business of said Company and what said receipts were derived from was from the returns hereto annexed, marked Exhibit 'A,' and from their knowledge as aforesaid of the plaintiff's business.

"The cause being thus submitted to the court on the foregoing stipulation of facts and the argument of counsel, the court is of the opinion that said receipts and tax may be separated and apportioned, and that said tax, so far as so separated and apportioned to said receipts derived from the interstate commerce, is unconstitutional and void, but valid apportionable to said receipts derived from state business.

"It is thereupon ordered by the court, adjudged and decreed that the defendant is hereby forever enjoined from collecting on said assessment of $5,206.90 more than the sum of $1,275.39, and an injunction is refused as to the balance of said tax. It is further ordered that the defendant pay the costs of this suit."

The judges of the circuit court, upon this state of facts, made the following certificate of a difference of opinion:

"This is to certify that at the hearing of the [416] above entitled cause before Hon. Howell E. Jackson, circuit judge, and George R. Sage, district judge, said judges differed in opinion upon the following question of law, to wit:

"Whether a single tax, assessed under the Revised Statutes of Ohio, section 2778, upon the receipts of a telegraph company, which receipts were derived partly from interstate commerce and partly from commerce within the State, but which were returned and assessed in gross and without separation or apportionment, is wholly invalid, or invalid only in the proportion and to the extent that said receipts were derived from interstate commerce.

"And the district judge being of the opinion that such a tax is wholly invalid, and the circuit judge being of the opinion that it is invalid only to the extent and in the proportion that the receipts upon which it is based were derived from interstate commerce, said question is hereby certified to the Supreme Court of the United States for its opinion.

"HOWELL E. JACKSON, *Circuit Judge.*
"GEO. R. SAGE, *District Judge.*"

The case has been very fully argued before us upon all the matters properly presented by the record, and it seems probable from the amicable nature of the proceedings and the agreement as to a statement of facts upon which the case was to be tried, without any answer being filed to the bill, that the purpose was to obtain the judgment of this court upon the general subject of the liability of the Corporation to taxation upon the amount of its receipts, and that the certificate of a difference of opinion has been used for that purpose.

With regard to the question which is certified to us as dividing the opinions of the judges of the circuit court, we do not think that there is any difficulty, and can hardly see how it arose in the present case. That question is "whether a single tax, assessed under the Revised Statutes of Ohio, section 2778, upon the receipts of a telegraph company, which receipts were derived partly from interstate commerce and partly from commerce within the State, but which were returned and assessed in gross and without separation or apportionment, is wholly invalid, or invalid only in the proportion and to the extent that said receipts were derived from interstate commerce."

We do not think this particular question is material in this case, because the state of facts [424] agreed upon by the parties makes this separation, and presents the matter to the court freed from the point raised by the question that the tax was not separable. Nor do we believe, if there were allegations either in the bill or answer setting up that part of the tax was from interstate commerce and part from commerce wholly within the State, that there would have been any difficulty in securing the evidence of the amount of receipts chargeable to these separate classes of telegrams, by means of the appointment of a referee or master to inquire into that fact and make report to the court. Neither are we of opinion that there is any real question, under the decisions of this court, in regard to holding that so far as this tax was levied upon receipts properly appurtenant to interstate commerce that it was void, and that so far as it was only upon commerce wholly within the State that it was valid.

This precise question was adjudged in the case of the *State Freight Tax*, 82 U. S. 15 Wall. 232 [21:146]. That was a case in which a statute of the State of Pennsylvania was examined which provided for a tax upon every ton of freight transported by any railroad or canal in that State, at certain rates,—two cents for one class of freight, three cents for another, and five cents for still another class. The payment of this tax was resisted by the Reading Railroad Company upon the ground that it was levied on interstate commerce. The company made returns to the accounting officers of the Commonwealth, in which they stated separately the amount of freight whose transportation was wholly within the State, and also the amount of the transportation of freight brought into or carried out of that State. This court held that the tax upon the former class, being upon commerce wholly within the State, was valid under the law of Pennsylvania by which it was imposed, but that the latter classes, being commerce among the States, were not subject to such taxation.

This ruling shows that where the subjects of taxation can be separated so that that which arises from interstate commerce can be distinguished from that which arises from commerce wholly within the State, the court will act upon this distinction, and will restrain the tax on [425] interstate commerce while permitting the State to collect that arising upon commerce solely within its own territory.

In *Pensacola Tel. Co.* v. *Western Union Tel. Co.* 96 U. S. 1 [24:708], it was decided by this court that the telegraph was an instrument of commerce; that telegraph companies were subject to the regulating power of Congress in respect to their foreign and interstate business, and that such a company occupies the same relation to commerce as a carrier of messages

that a railroad company does as a carrier of goods.

In *Western Union Tel. Co.* v. *Texas*, 105 U. S. 460 [26: 1067], the same question presented in this case was before the court—that of the power of the State to tax telegraphic messages received and delivered by the same Corporation —which is now before us. In that case no distinction was made by the statute between what we now call interstate messages and those exclusively within the State. This court, therefore, in reviewing the decision of the Supreme Court of the State of Texas, which had allowed no deduction for taxes on messages sent out of the State, or by government officers on government business, said: "It follows that the judgment, so far as it includes the tax on messages sent out of the State, or for the government on public business, is erroneous. The rule that the regulation of commerce which is confined exclusively within the jurisdiction and territory of a State, and does not affect other nations or States or the Indian tribes,—that is to say, the purely internal commerce of a State,—belongs exclusively to the State, is as well settled as that the regulation of commerce which does affect other nations or States or the Indian tribes belongs to Congress. Any tax, therefore, which the State may put on messages sent by private parties, and not by the agents of the Government of the United States, from one place to another, exclusively within its own jurisdiction, will not be repugnant to the Constitution of the United States. Whether the law of Texas, in its present form, can be used to enforce the collection of such a tax is a question entirely within the jurisdiction of the courts of the State, and as to which we have no power of review."

[426] The court reversed the judgment of the Supreme Court of Texas, and remanded the cases with instructions for such further proceedings as justice might require. Evidently, the purpose of this was to permit the Supreme Court of that State, if it could separate the taxes upon the two classes of telegrams, to do so, and to render judgment accordingly.

In the recent case of the *Western Union Tel. Co.* v. *Attorney-General of Massachusetts*, 125 U. S. 530 [31: 790], decided at this term, a tax was levied upon that Corporation, apportioned under the laws of Massachusetts upon the taxable value of its capital stock. The ratio which should have been allotted to that Commonwealth may be supposed to have been properly apportioned to it, ascertaining that portion by means of the length of the lines of the Company in relation to the entire mileage of its lines in the United States. The payment of the tax was resisted, however, partly upon the ground that it was levied upon interstate commerce, but mainly because it was asserted to be a violation of the rights conferred on the Company by the Act of July 24, 1866, now title LXV, sections 5263 to 5269 of the Revised Statutes. It was alleged that the defendant company, having accepted the provisions of that law, was entirely exempt from taxation by the State. This court, however, held that this exemption only extended under that law to so much of the lines of the Telegraph Company as were, in the language of section 5263, "through and over any portion of the public domain of the United States, over and along any of the military or post roads of the United States which have been or may hereafter be declared such by law, and over, under, or across the navigable streams or waters of the United States."

It was shown in that case that, of the 2,833.05 miles of the lines of the defendant corporation within the boundaries of Massachusetts, more than 2,334.55 miles came within the terms of that section, being over or along post roads, made such by the United States, or over, under, or across its navigable streams or waters, leaving only 498.50 miles not within such description, on which the Company offered to pay the proportion of the tax assessed against it according to mileage by the state authorities.

We refer to this now only for the purpose of [427] showing how easily the subject of taxation which is forbidden by the Constitution may be separated from that which is permissible in this class of cases. The court held in that case that this tax, being in effect levied upon the capital stock or property of the Company in the State of Massachusetts, which was ascertained upon the basis of the proportion which the length of its lines in that State bore to their entire length throughout the whole country, and not upon its messages or upon the receipts for such messages, was a valid tax. The question of interstate commerce, as affecting the tax in that action, was very little pressed by counsel for the Company, but they relied upon the privilege granted by section 5263, already cited, to companies which accepted its provisions, and upon the fact that a large proportion of the lines of the defendant telegraph company were over or along post roads, or over, under, or across the navigable streams or waters of the United States.

In the present case counsel for the Telegraph Company have argued that this statute secures the Corporation from taxation of any kind whatever, and especially as to receipts arising from messages sent over its lines; but that question does not arise in this action, because there is no allegation or averment, either in the bill itself or in the statement of facts, that any part of the lines of the Telegraph Company in the State of Ohio is built over or along a post road, or comes within the provisions of section 5263. The only reference to this subject is in the following allegation of the bill: "That prior to 1869 your orator accepted in writing the provisions of the Act of Congress of July 4, 1866, 14 U. S. Stat. at L. 221." Under this allegation the complainant can, of course, claim no benefit from the provisions of that section, for it does not appear that any part of the Company's line comes within the description of this section of the Revised Statutes.

Under these views, we answer the question, in regard to which the judges of the circuit court divided in opinion, by saying that a single tax, assessed under the Revised Statutes of Ohio, upon the receipts of a telegraph company which were derived partly from interstate commerce and partly from commerce within the [428] State, but which were returned and assessed in gross and without separation or apportionment, is *not* wholly invalid, but is invalid only in proportion to the extent that such receipts were derived from interstate commerce. Concur-

ring, therefore, with the circuit judge in his action, enjoining the collection of the taxes on that portion of the receipts derived from interstate commerce, and permitting the Treasurer to collect the other tax upon property of the Company and upon receipts derived from commerce entirely within the limits of the State, this decree is *affirmed*.

---

[457]

GEORGE BENSON, *Appt.*,

v.

MARTIN T. McMAHON, Marshal of the United States for the SOUTHERN DISTRICT OF NEW YORK, ET AL.

(See S. C. Reporter's ed. 457-471.)

Habeas corpus—questions considered—commissioner—extradition—forgery.

1. Upon appeal from a judgment on a writ of *habeas corpus* issued to the Marshal requiring him to produce a prisoner held by him by order of the United States Commissioner, by whom he was committed, for the purpose of being delivered up as a fugitive from justice,—*Held*, that this court is not bound to consider questions as to the admission of evidence before the commissioner which are unimportant in regard to the sufficiency of the proceedings. The writ does not operate as a writ of error.

2. The questions to be considered are: Had the commissioner jurisdiction to hear and decide upon the complaint, and was there sufficient legal ground for his action in committing the prisoner?

3. The proceeding before the commissioner is not a final trial, but a preliminary examination.

4. Under the Treaty between this country and Mexico, a person may be extradited from this country to Mexico for the crime of forgery of an instrument, which is made an offense by the laws of Mexico, he having been held in Mexico for the offense.

5. Where an instrument is required to be in writing, the term "writing" includes printing as well as script.

[No. 1420.]

Argued May 1, 1888. Decided May 14, 1888.

APPEAL from a judgment of the Circuit Court of the United States for the Southern District of New York, dismissing a writ of *habeas corpus* and remanding the prisoner to the custody of the Marshal. *Affirmed.*

The facts are fully stated in the opinion.

Mr. **Peter Mitchell**, for appellant:

An appeal lies to this court from the decision of the circuit court dismissing a writ of *habeas corpus*.

Carper v. *Fitzgerald*, 121 U. S. 87 (30:882); Act of March 3, 1885, chap. 353, 23 Stat. at L. 437.

In extradition cases the whole subject of foreign intercourse is committed to the Federal Government.

People v. *Curtis*, 50 N. Y. 321; *Ex parte Windsor*, 10 Cox, Cr. Cas. 121; *Re Eno*, Spear, Law of Extradition, 276; Clark, Extradition, 131, 134; 7 Legal News, 360, 361; 10 Quebec Law Rep. 194; *Re Tully*, 20 Fed. Rep. 816.

Forgery, at the common law, is the false making or materially altering, with intent to defraud, of a writing.

2 Bish. Cr. L. 7th ed. § 523; 1 Barb. Cr. L. 3d ed. 173; 4 Black. Com. 247; Prin. Cr. L. Sc. by Alison; 3 Chit. Cr. L. 1022.

A theater ticket is only a license.

Mendenhall v. *Klinck*, 51 N. Y. 246; *Wood* v. *Leadbitter*, 13 Mees. & W. 838; *Purcell* v. *Daly*, 19 Abb. N. C. 301; *Rex* v. *Jones*, 1 Leach, Cr. Cas. 204-206.

If the instrument be invalid on its face, it cannot be the subject of forgery, because it has no legal tendency.

Cunningham v. *People*, 4 Hun, 457; *People* v. *Martin*, 36 Hun, 462; *People* v. *Shall*, 9 Cow. 778; *People* v. *Fitch*, 1 Wend. 198; *People* v. *Wilson*, 6 Johns. 320; *People* v. *Stearns*, 21 Wend. 409; *People* v. *Harrison*, 8 Barb. 560; *People* v. *Mann*, 75 N. Y. 484.

Definition of a seal at common law.

Warren v. *Lynch*, 5 Johns. 239; 3 Coke, Inst. 169; Perkins, 129, 134; Brooke, Abr. *Faits*, 17, 30; 2 Leon, 21; *Meredith* v. *Hinsdale*, 2 Cal. 362; *Mill Dam Foundery* v. *Hovey*, 21 Pick. 417.

It was error to admit the requisition, the documentary evidence, and the Penal and Criminal Codes of Mexico.

Re Henrich, 5 Blatchf. 414, 425; *Re McPhun*, 30 Fed. Rep. 60; 1 Greenl. Ev. 12th Redf. ed. § 488, note 1, p. 534; *Leonard* v. *Columbia Steam Nav. Co.* 84 N. Y. 48; *Chanoine* v. *Fowler*, 3 Wend. 173; *Hill* v. *Packard*, 5 Wend. 375, 393; *U. S.* v. *Glass Ware*, 4 Law Rep. 36.

There is a fatal variance between the complaint and the proof.

1 Whart. Cr. L. 7th ed. § 256; East, P. C. 514; *Rex* v. *Jenks*, 2 Leach, Cr. Cas. 774; *Commonwealth* v. *Ray*, 3 Gray, 441.

Before a man can be punished his case must be plainly and unmistakably within the statute, and if there be any fair doubt whether the statute embraces it, that doubt is to be resolved in favor of the accused.

U. S. v. *Morris*, 39 U. S. 14 Pet. 464 (10:543); *U. S.* v. *Wiltberger*, 18 U. S. 5 Wheat. 76 (5:37); *U. S.* v. *Sheldon*, 15 U. S. 2 Wheat. 119 (4:199); 1 Bish. Cr. L. § 134, 145.

Messrs. **S. Mallet-Prevost** (by special leave of court) and **DeLancey Nicoll**, for the Mexican Government:

The complaint need not be drawn with the formal precision and nicety of an indictment for final trial.

Re Henrich, 5 Blatchf. 414; Spear, Extradition, 250; 1 Bish. Cr. Pro. 231; *People* v. *Hicks*, 15 Barb. 158; *Payne* v. *Barnes*, 5 Barb. 465.

Authentication in regard to original papers may be made by oral proof given here.

Re McPhun, 30 Fed. Rep. 57; *Re Wadge*, 15 Fed. Rep. 865; *S. C.* 16 Fed. Rep. 333, 21 Blatchf. 300.

Whether the witness has the qualifications required is a question of fact, and not reviewable by this court.

Jones v. *Tucker*, 41 N. H. 547; *Dole* v. *Johnson*, 50 N. H. 458; *Re Henrich*, 5 Blatchf. 417; *Re Kaine*, 10 N. Y. Leg. Obs. 257; *Re Heilbronn*, 12 N. Y. Leg. Obs. 65; *Ex parte Van Aernam*, 3 Blatchf. 160; Whart. Cr. Pl. & Pr. § 57.

The fabricated ticket was the subject of forgery at common law.

4 Bl. Com. 24; 2 East, Pl. 852; 3 Chit. Cr. L. 1022, 1023; *Rex* v. *Parkes*, 2 Leach, Cr. Cas. 775; 2 Russ. Cr. 709; 2 Bish. Cr. L. § 528; 1 Whart. Cr. L. §§ 653, 680, 682; Barb. Cr. L. 2d ed. §§ 114, 115.

A writing void on its face is a paper in respect to which forgery cannot be predicated without the averment of some extrinsic fact, showing now it may become pernicious.

Archb. Cr. Pr. 574, note; *Rex* v. *Martin*, 1 Moody, Cr. Cas. 483; *Reg.* v. *Houseman*, 8 Car. & P. 180; *Reg.* v. *Vaughan*, Id. 276; *Reg.* v. *Boardman*, 2 Moody & Rob. 147; *Rex* v. *Jones*, 1 Leach, Cr. Cas. 204; *Mitchell's Case*, Foster, Cr. Cas. 119; *People* v. *Shall*, 9 Cow. 784; *People* v. *Fitch*, 1 Wend. 198; *People* v. *Wilson*, 6 Johns. 320; *People* v. *Harrison*, 8 Barb. 560; *Cunningham* v. *People*, 4 Hun, 455; *People* v. *Martin*, 36 Hun, 462; *People* v. *Savage*, 5 N. Y. Cr. Rep. 543.

But where the writing, though incomplete and uncertain, can be shown to be valid, possessing legal efficacy, and therefore capable of being used for the purpose of defrauding, it is the subject of forgery provided averment and proof of such extrinsic facts are made.

Reg. v. *Boult*, 2 Car. & K. 604; *Reg.* v. *Moah*, Dears. & B. Cr. Cas. 550; *Drew* v. *Peer*, 93 Pa. 234; *Wood* v. *Leadbitter*, 13 Mees. & W. 850; *Taylor* v. *Waters*, 7 Taunt. 374; *Burton* v. *Scherpf*, 1 Allen, 133; *Magoverning* v. *Staples*, 7 Lans. 145.

An engraved or printed instrument, or an engraved or printed name, affixed to an instrument by a person, is his act.

People v. *Rhoner*, 4 Park. Cr. Cas. 166; Whart. Cr. L. § 675; *Commonwealth* v. *Ray*, 3 Gray, 441; *Reg.* v. *Smith*, Dears. & Bell, Cr. Cas. 567; *Reg.* v. *Rinaldi*, 9 Cox, Cr. Cas. 391; *Henshaw* v. *Foster*, 9 Pick. 312; *Saunderson* v. *Jackson*, 2 Bos. & P. 238.

If a person is in the habit of printing his name, such printing the name, by way of signature, is tantamount to writing it.

Chit. Cont. 10th Am. ed. 72; *Schneider* v. *Norris*, 2 Maule & S. 286; *Wheeler* v. *Lynde*, 1 Allen, 402.

[458] *Mr. Justice* **Miller** delivered the opinion of the court:

This is an appeal from a judgment of the Circuit Court of the United States for the Southern District of New York upon a writ of *habeas corpus*, in which that court remanded the prisoner to the custody of the Marshal of the district.

The proceedings were originally instituted by a complaint, made before Samuel H. Lyman, a United States Commissioner for the Circuit Court of that district, by one Juan N. Navarro, Consul-General of the Republic of Mexico at the City of New York, against George Benson, whom he charged with being guilty of the crime of forgery, committed in Mexico, and therefore liable to extradition under the Treaty of December 11, 1861, between the United States and Mexico, to be there tried for that offense. The case was heard quite elaborately before Commissioner Lyman, who rendered the following judgment: "After a full and fair examination of the law and the facts in the case, I find that the evidence produced against the said Benson is sufficient in law to justify his commitment for the crime of forgery for the purpose of being delivered up as a fugitive from justice to the Republic of Mexico, pursuant [459] to the provisions of the said treaty. Wherefore I have committed the said Benson, pursuant to the provisions of said treaty, to the custody of the United States Marshal, to be by him held in the proper jail until a warrant for the surrender of the said Benson shall issue according to the stipulation of the said treaty, or he shall be otherwise dealt with according to law."

A writ of *habeas corpus* was thereupon allowed by *Justice* Blatchford, of the Supreme Court of the United States, directed to Martin T. McMahon, the Marshal in whose custody the prisoner, Benson, was held by order of the commissioner, requiring him to produce said prisoner before the Circuit Court of the United States for that district on February 21, 1888, at 11 o'clock in the forenoon; and also a writ of *certiorari* to Commissioner Lyman, directing him to return at the same time the "cause of imprisonment of George Benson, and true copies of the proceedings, complaints, warrants, depositions, trials, examinations, determinations, commitments, and record" had before him.

To this the Marshal made return that he held the prisoner by virtue of a commitment of Commissioner Lyman, and the commissioner returned into the court a transcript of all the proceedings had before him, including the testimony and exhibits. Upon the hearing in the circuit court it was "Ordered, that the writ of *habeas corpus* be and the same is hereby discharged; that the petitioner remain in the custody of the Marshal of the United States for the Southern District of New York, pending such application on appeal as petitioner may be advised to make to a justice of the Supreme Court of the United States, pursuant to the 34th Rule of that court; or until the further order of this court, upon notice by said complainant after twenty days from the date of this order."

Thereupon the petitioner, George Benson, obtained the allowance of an appeal from this judgment of the circuit court to this court, by *Mr. Justice* Blatchford. The matter has been argued very fully before us by counsel for the prisoner and for the Mexican Government.

This proceeding was instituted before the commissioner under title LXVI of the Revised Statutes of the United States, concerning extradition. The first section reads as follows: [460]

"Sec. 5270. Whenever there is a treaty or convention for extradition between the Government of the United States and any foreign government, any justice of the Supreme Court, circuit judge, district judge, commissioner, authorized so to do by any of the courts of the United States, or judge of a court of record of general jurisdiction of any State, may, upon complaint made under oath, charging any person found within the limits of any State, district, or Territory, with having committed within the jurisdiction of any such foreign government any of the crimes provided for by such treaty or convention, issue his warrant for the apprehension of the person so charged, that he may be brought before such justice, judge or commissioner, to the end that the evidence of criminality may be heard and considered. If, on such hearing, he deems the evidence sufficient to sustain the charge under the provisions of the proper treaty or convention, he shall certify the same, together with a copy of all the testimony taken before him, to the Secretary of State, that a warrant may issue upon

the requisition of the proper authorities of such foreign government, for the surrender of such person according to the stipulations of the treaty or convention; and he shall issue his warrant for the commitment of the person so charged to the proper jail, there to remain until such surrender shall be made."

There is no evidence in this record, at least there is no copy of any demand or requisition made by the Mexican authorities upon our government, for the extradition of this prisoner. The proceedings, therefore, up to this time rest upon the initiative authorized by the statutes upon that subject; the Mexican Government, however, being represented by counsel, and the correspondence with its officers, which was introduced into the record, showing their interest in the matter and their purpose to have this prisoner brought to that country for trial.

The treaty under which this right to arrest the prisoner and detain him for extradition is [461] asserted was concluded at Mexico, December 11, 1861, and proclaimed by the President of the United States June 20, 1862. 12 U. S. Stat. at L. 1199. It has the usual provisions, that the contracting parties shall on requisitions made in their name deliver up to justice persons who, being accused of the crimes enumerated in article 3, committed within the jurisdiction of the requiring party, shall seek an asylum, or shall be found within the territories of the other. The enumeration of crimes in that article is as follows:

"Murder (including assassination, parricide, infanticide, and poisoning); assault with intent to commit murder; mutilation; piracy; arson; rape; kidnapping, defining the same to be the taking and carrying away of a free person by force or deception; forgery, including the forging or making, or knowingly passing or putting in circulation, counterfeit coin or bank notes, or other paper current as money, with intent to defraud any person or persons; the introduction or making of instruments for the fabrication of counterfeit coin or bank notes, or other paper current as money; embezzlement of public moneys; robbery, defining the same to be the felonious and forcible taking from the person of another of goods or money to any value, by violence, or putting him in fear; burglary, defining the same to be breaking and entering into the house of another with intent to commit felony; and the crime of larceny, of cattle or other goods and chattels, of the value of twenty-five dollars or more, when the same is committed within the frontier States or Territories of the contracting parties."

As the case appears before us on the transcript of the evidence produced before Commissioner Lyman, and before the circuit court on the writ of *habeas corpus*, it is considerably confused but very full and elaborate. Several questions in regard to the introduction of evidence which were raised before the commissioner, some of them concerning the sufficiency of the authentication of papers and depositions taken in Mexico, and as to the testimony of persons supposed to be expert in the law of that country regarding the subject, are found in the record, which we do not think require notice here. The writ of *habeas corpus*, directed to the Marshal of the Southern District of New York, does not operate as a writ of error, and many of the orders and decisions [462] made by the commissioner at the hearing which took place before him become unimportant in the examination of the sufficiency of the proceedings under which he ordered the the prisoner into custody. The main question to be considered upon such a writ of *habeas corpus* must be, Had the commissioner jurisdiction to hear and decide upon the complaint made by the Mexican consul; and also, was there sufficient legal ground for his action in committing the prisoner to await the requisition of the Mexican authorities?

In regard to the jurisdiction of the commissioner to hear the complaint no doubt can be entertained. The offense set out in three or four different forms in the petition of Navarro, the Mexican consul-general, is distinctly that of forgery on the part of Benson; the particular forgery charged is that of the name of Henry E. Abbey, and the time, place and circumstances are detailed with sufficient particularity to comply with the language of the treaty. The Revised Statutes, after providing for the hearing before the justice, or other officer to whom that duty is committed, to the end that the evidence of criminality may be heard and considered, proceed to enact, that if, on such hearing, such officer "deems the evidence sufficient to sustain the charge under the provisions of the proper treaty or convention, he shall certify the same, together with a copy of all the testimony taken before him, to the Secretary of State, that a warrant may issue upon the requisition of the proper authorities of such foreign government, for the surrender of such person, according to the stipulations of the treaty or convention."

The subject of what proof shall be required for the delivery upon requisition of parties charged with crime is considered in article I of the treaty, in regard to which it is provided "that this shall be done only when the fact of the commission of the crime shall be so established as that the laws of the country in which the fugitive or the person so accused shall be found would justify his or her apprehension and commitment for trial if the crime had been there committed."

Taking this provision of the treaty, and that of the Revised Statutes above recited, we are of [463] opinion that the proceeding before the commissioner is not to be regarded as in the nature of a final trial by which the prisoner could be convicted or acquitted of the crime charged against him, but rather of the character of those preliminary examinations which take place every day in this country before an examining or committing magistrate for the purpose of determining whether a case is made out which will justify the holding of the accused, either by imprisonment or under bail, to ultimately answer to an indictment, or other proceeding, in which he shall be finally tried upon the charge made against him. The language of the treaty, which we have cited, above quoted, explicitly provides that "the commission of the crime shall be so established as that the laws of the country in which the fugitive or the person so accused shall be found would justify his or her apprehension and commitment for trial if the crime had been there committed." This describes the proceedings in these preliminary ex-

aminations as accurately as language can well do it. The Act of Congress conferring jurisdiction upon the commissioner, or other examining officer, it may be noted in this connection, says that if he deems the evidence sufficient to sustain the charge under the provisions of the treaty he shall certify the same, together with a copy of all the testimony, and issue his warrant for the commitment of the person so charged.

We are not sitting in this court on the trial of the prisoner, with power to pronounce him guilty and punish him or declare him innocent and acquit him. We are now engaged simply in an inquiry as to whether, under the construction of the Act of Congress and the treaty entered into between this country and Mexico, there was legal evidence before the commissioner to justify him in exercising his power to commit the person accused to custody to await the requisition of the Mexican Government. Omitting much, therefore, that under this view of the case is immaterial, both in the argument of counsel and in the record of the case as it comes before us, the following facts appear to be well established:

[464] Mr. Henry E. Abbey, a noted theatrical manager in this country, had brought Adelina Patti, the wonderful songstress, from Europe to the United States under an arrangement that she would also sing in Mexico. Benson made the acquaintance of Abbey here, and also became intimate with his agent, whose name was Marcus Meyer. Through the latter he learned that arrangements had been made for the appearance of Patti at the Teatro Nacional in the City of Mexico, in the month of December, 1886. After obtaining the particulars of the engagement and contract for the use of that theater from Abbey's agent, Benson hastened to the City of Mexico, where he represented himself as Meyer and as the agent of Mr. Abbey. He succeeded in imposing upon the parties having control of the theater so far as to make them believe that he had full authority to conduct the arrangements for the concerts and operas in which Patti was to appear, which were advertised in the newpapers of that city. He accordingly proceeded to fix the date of such performances, to arrange the prices and issue the tickets therefor, which he sold and obtained the money for to the amount of some twenty-five or thirty thousand dollars. He escaped with this money, fled from Mexico, and went to Europe. Of course all the persons who had bought the tickets, so issued by him, were defrauded of the amount paid for them, as well as great injury done to Mr. Abbey and the owners of the theater in regard to the performances to be held there.

The specific offense charged against Benson arising out of this transaction is the forgery of these tickets of admission, of which the originals are produced before us with their translations. [Copies of these tickets are given below.]

[465] About the only contest made by the counsel for the prisoner is, that these are not forgeries, mainly because they are printed matter and are not in writing, and because neither the name of Mr. Abbey, nor of anybody purporting to be responsible therefor, is found in writing upon them, using the word "writing," as de-

COPY OF TICKETS PRODUCED, EXCEPT AS TO STAMP AND COLOR.

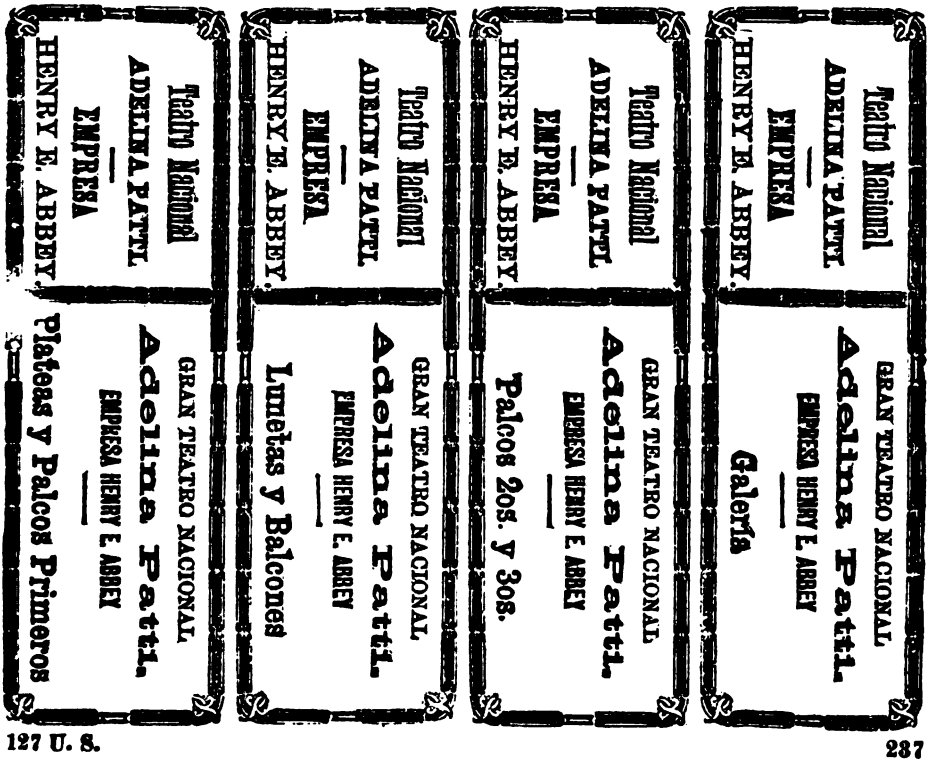

fendant's counsel does, as meaning script or signatures made by the use of a pen. It is therefore contended that these tickets are not forgeries; but the fraudulent intent with which they were issued, the actual loss and deception to the parties who bought them, and the injury to Mr. Abbey and the others concerned, are not controverted. It is said, however, that this is only a cheat at common law, and it is very strenuously [466] argued that the real meaning of the word "forgery" in this treaty is to be ascertained by the definition of that offense according to the common law of England.

The first idea that occurs to the mind in reference to this suggestion is, that the common law of England can hardly be said to be the only criterion by which to construe the language of a treaty between Mexico and the United States. The former government cannot be supposed to have had that common law exclusively in mind as governing the true construction of a treaty concluded between itself and this country, neither of which owes any allegiance to England.

Another circumstance in connection with this matter is, that this court has frequently decided that there are no common-law crimes of the United States. In very few of the States were there common-law crimes remaining as subjects of punishment at the time when this treaty was made. Almost every State in the Union has recast her criminal law by the enactment of statutes in such a mode that the common law is now only appealed to as an aid in the definition of crimes. By the Roman civil law, which perhaps pervades or did pervade the jurisprudence of the larger portion of the civilized nations of the earth at the time of the making of this treaty, forgery was looked upon as one of the subdivisions of the *crimen falsi*, which included forgery, perjury, the alteration of the current coin, dealing with false weights and measures, etc. 1 Bouv. L. Dict. 411. In support of this view it may be noted that the term corresponding to the word "forgery" which is used in the Spanish draft of the treaty is "la falsificacion."

It certainly does not appear from this that the Mexican authorities intended to be bound in the treaty by any very restricted use of the word "forgery" when the question concerned an offense of that character committed in Mexico. It is for an offense against Mexican law that the prisoner is held to answer. As he is not now upon final trial, but the only question is whether he has committed an offense for which, according to this treaty, he should be extradited to that country and there tried, [467] we do not see that in this application to set the prisoner at large, after he has been once committed by an examining court having competent authority, and after having been held to answer in Mexico for the offense charged, that this court is bound to examine with very critical accuracy into the question as to whether or not the act committed by the prisoner is technically a forgery under the common law. Especially is this so when the wickedness of the act, the fraudulent intent with which it was committed and the final success by which the fraud was perpetrated, are undoubted.

But we are not satisfied that the crime of forgery, even at common law, is limited to the production by means of a pen of the resemblance of some man's genuine signature which was produced with a pen. This view of the subject would exclude from the definition of this crime all such instruments as government bonds, bank notes, and other obligations of great value, as well as railroad tickets, where the signature of the officer which makes them binding and effectual is impressed upon them by means of a plate or other device representing his genuine signature. It would also exclude from its definition all such instruments charged as forgeries where the similitude of the signer's name is produced by a plate used by the forger. It can hardly be possible that these are not forgeries within the definition of the common law; and if they are, they show that it is not necessary that the name which appears upon the false instrument shall be placed thereon by means of a pen or by the actual writing of it in script, but that the crime may be committed as effectually if it is done by an engraved plate or type so arranged as to represent or forge the name as made by the actual use of a pen. It is difficult to perceive how the question as to whether the forgery was committed by printing, or by stamping, or with an engraved plate, or by writing with a pen, can change the nature of the crime charged.

Mr. Bishop in the second volume of his work on criminal law discusses this subject with his usual philosophical acumen. He says:

"Sec. 525. Looking at the writing as a representation addressed to the eye, reason teaches us that whether it is made with the pen, with a [468] brush, with printers' type and ink, with any other instrument, or by any other device whatever—whether it is in characters which stand for words or in characters which stand for ideas, in the English language, or in any other language,—is quite immaterial, provided the representation conveys to any mind the substance of what the law requires to constitute the writing whereof forgery may be committed. This statement of the doctrine is in broader terms than are to be found in the books, yet there is no decision contrary to what is thus said; and, beyond doubt, the tribunals will hold the law as thus stated whenever the occasion requires.

"Sec. 526. Thus Mr. Hammond remarks: 'The question upon this branch of the inquiry remains, whether seals, or rather their impressions, with other similar subjects, are upon a similar footing with writings [here employing the word in its restricted sense]; and in all probability it will be found that they are, though no positive authority has sanctioned this notion.'"

This author also quotes from the fifth report of the English Criminal Law Commission, made in 1840, p. 69 *et seq.*, in which is found the following language, speaking of forgery:

"The offense extends to every writing used for the purpose of authentication; as in the case of a will, by which a testator signifies his intentions as to the disposition of his property, or of a certificate by which an officer or other authorized person assures others of the truth of any fact, or of a warrant by which a magistrate signifies his authority to arrest an offender. The crime is not confined to the falsifica-

tion of mere writings; it plainly extends to seals, stamps, and all other visible marks of distinction by which the truth of any fact is authenticated, or the quality or genuineness of any article is warranted; and, consequently, where a party may be deceived and defrauded from having been, by false signs, induced to give credit where none was due."

While the views of counsel for the prisoner are unsupported by any well considered judicial decision, there is high authority for holding the contrary. The great increase in [469] the use of printing for all forms of instruments, such as deeds, bonds, tickets, tokens for the payment of goods, etc., have seemed to demand that where, either by the common law or by statute, such instruments are required to be in writing, the term "writing" should be held to include printing as well as script.

In *Henshaw* v. *Foster*, 9 Pick. 312, reference was made to the provision of the Constitution of the State of Massachusetts which declared that "every member of the House of Representatives shall be chosen by written votes." A party offered his ballot, which was rejected, and he thereupon sued the inspectors of the election for their refusal to receive his vote. They declined to accept it upon the ground that the ballot was printed, and was not therefore "written" within the meaning of the Constitution. The court however, in a very well considered opinion, decided that the printed vote came within the meaning of the law requiring votes to be in writing.

In the subsequent case of *Commonwealth* v. *Ray*, 8 Gray, 441, the defendant was indicted for forgery, and the question was whether the instrument which he presented constituted a forgery at common law. The court said: "It is objected that the crime of forgery cannot be committed by counterfeiting an instrument wholly printed or engraved, and on which there is no written signature personally made by those to be bound. The question is whether the writing, the counterfeiting of which is forgery, may not be wholly made by means of printing or engraving, or must be written by the pen by the party who executes the contract. In the opinion of the court, such an instrument may be the subject of forgery, when the entire contract, including the signature of the party, has been printed or engraved. The cases of forgery generally are cases of forged handwriting. The course of business, and the necessities of greater facilities for dispatch, have introduced, to some extent, the practice of having contracts and other instruments wholly printed or engraved, even including the name of the party to be bound, * * * It has never been considered any objection to contracts required by the Statute of Frauds to be in writing that they were printed."

Then after speaking of the cases in which a [470] signature made by the pen is necessary to the execution of a contract, the court proceeds: "But if an individual or a corporation do in fact elect to put into circulation contracts or bonds in which the names of the contracting parties are printed or lithographed, as a substitute for being written with the pen, and so intended, the signatures are to all intents and purposes the same as if written. It may be more difficult to establish the fact of their signatures; but if shown, the effect is the same. Such being the effect of such form of executing like contracts, it would seem to follow that any counterfeit of it, in the similitude of it, would be making a false writing purporting to be that of another, with the intent to defraud."

It was, therefore, held in that case that, although he did not personally aid in the manual operation of engraving or lithographing the spurious instrument, yet it being conceded that it was done by his procuration, the defendant was responsible. That was the case of a railroad ticket, and the applicability of the decision to the matter now before us is unquestionable.

The case of *People* v. *Rhoner*, 4 Park. Cr. Rep. 166, is strikingly like the present one in almost every particular. There the prisoner had been committed by a justice of the peace on the preliminary examination, upon a charge of having in his possession, knowingly, counterfeited notes of the Austrian National Bank, with intent to defraud. He was brought before the Supreme Court in the State of New York by a writ of *habeas corpus*, and the same question which is raised here was there presented. It was said that every part of these bank notes upon which the charge was founded, which appeared to be complete and entirely filled up, including the signature of the cashier or director, was evidently a print or impression from an engraved plate. The argument was there pressed, as in this case, that these notes could not be forgeries for that reason, nor could they be the subject of forgery. The whole question was very fully reviewed by *Judge* Sutherland in his opinion, in which he held that "the word 'instrument' includes not only 'written instruments' and 'writings,' but also engraved or printed instruments, be- [471] ing or purporting to be the act of another; indeed, all and every kind of instrument by the forging of which any person may be affected, bound, or in any way injured in his person or property. I do not see why an engraved or printed instrument, or an engraved or printed name, affixed to an instrument by a person is not his act, and may not purport to be the act of another."

The same principle is reaffirmed by the Supreme Court of Massachusetts in the case of *Wheeler* v. *Lynde*, 1 Allen, 402.

We are of opinion that the decision of Commissioner Lyman, committing the prisoner to the custody of the Marshal to await the requisition of the Mexican Government, was justified, and *the judgment of the Circuit Court dismissing the writ of* habeas corpus *is accordingly affirmed.*

STATE OF WISCONSIN, *Plff.*, [265]
v.
PELICAN INSURANCE COMPANY OF NEW ORLEANS.

(See S. C. Reporter's ed. 265-300.)

Jurisdiction of supreme court—corporation is a citizen—suit by State—judicial power—suits for penalties—effect of judgments—nature of action—extent of jurisdiction—action for penalty for failure of insurance company to file report.

1. By the Constitution, this court has original jurisdiction of suits brought by a State against citizens of another State, and of controversies between two States.
2. A corporation created by a State is a citizen of the State, within the meaning of the provisions of the Constitution and Statutes of the United States which define the jurisdiction of the federal courts.
3. The mere fact that a State is the plaintiff is not a conclusive test that the controversy is one in which this court is authorized to grant relief against another State or her citizens.
4. The grant of judicial power was not intended to confer upon the courts of the United States jurisdiction of a suit or prosecution by one State, of such a nature that it could not, on the settled principles of public and international law, be entertained by the judiciary of the other State.
5. The rule that the courts of no country execute the penal laws of another applies not only to prosecutions and sentences for crimes and misdemeanors, but to all suits in favor of the State for the recovery of pecuniary penalties for any violations of statutes for the protection of its revenue, or other municipal laws, and to all judgments for such penalties.
6. The provisions of the Constitution and of the Act of Congress, by which the judgments of one State are to have faith and credit given to them in another State, establish a rule of evidence, rather than of jurisdiction; they do not affect the jurisdiction of the court in which the judgment is rendered or of that in which it is offered in evidence.
7. The nature of a cause of action is not changed by recovering judgment upon it; and a court to which a judgment is presented for enforcement may ascertain whether the claim is really one that the court is authorized to enforce.
8. The original jurisdiction of this court over controversies between a State and citizens of another State, or of a foreign country does not extend to a suit by a State to recover penalties for a breach of her own municipal law.
9. This court cannot entertain an original action to compel an insurance corporation of one State to pay to another State the amount of a judgment recovered by the latter, for a penalty imposed by its statute upon such insurance corporation for doing business in such State, without having first deposited with the proper officer of the State the statement of its property and business required by such statute.

[No. 8 Orig.]

Argued April 25, 1887. Decided May 14, 1888.

ACTION of debt by the State of Wisconsin against a corporation of Louisiana, upon a judgment recovered by said State against said corporation for a penalty imposed by the statute of Wisconsin upon an insurance company of another State for doing business in that State, without having deposited in the office of the State Commissioner of Insurance the annual statement of its business and property as required by such statute. The action is an original one commenced in the first instance in this court. The answer sets up that the cause of action on which the judgment was recovered was the penalty above mentioned, and alleges that this court has not jurisdiction of a controversy of this nature between a State and a citizen of another State. The plaintiff demurred to the answer, and this court gave judgment for the defendant on the demurrer.

Statement by *Mr. Justice* **Gray**:

This was an action of debt, commenced in this court by the State of Wisconsin against a corporation of Louisiana. The declaration was as follows:

"The plaintiff, the State of Wisconsin, and one of the States of the United States, now comes and complains of the defendant, the Pelican Insurance Company of New Orleans, a corporation duly organized and existing under the laws of the State of Louisiana, in a plea of debt:

"For that, whereas, the plaintiff, the said State of Wisconsin, on the 16th day of September, in the year 1886, at the County of Dane, in the said State of Wisconsin, and in and before the Dane County Circuit Court, in said State—such court being then and there a court of general jurisdiction under the laws of said State—and by the consideration and judgment of the said court, recovered against the said defendant, the said Pelican Insurance Company, [266] a judgment in favor of the said plaintiff for the sum of eight thousand five hundred dollars damages, together with the further sum of forty-five dollars and thirty-nine cents for costs and disbursements, amounting in all to the sum of eight thousand five hundred and forty-five dollars and thirty-nine cents; which said judgment still remains in that court in full force and effect, and not in anywise modified, reversed, set aside, appealed from, or otherwise vacated; and the said plaintiff, the said State of Wisconsin, hath not obtained any satisfaction upon the said judgment, but, on the contrary, the whole thereof, together with interest thereon from said date of such judgment, remains wholly unpaid and owing; whereby an action hath accrued unto the said plaintiff, the said State of Wisconsin, to demand and have from and of the said defendant the said sum of eight thousand five hundred and forty-five dollars and thirty-nine cents, with interest.

"Wherefore the said plaintiff, the said State of Wisconsin, saith that the plaintiff is injured and hath sustained damage to the said amount of eight thousand five hundred and forty-five dollars and thirty-nine cents, with interest, and therefore it brings this suit."

Annexed to the declaration was a copy of the record of the judgment therein described, which showed that it was rendered on default of the defendant, after service of summons on three persons, each of whom was stated in the officer's return to be a resident and a citizen of Wisconsin and an agent of the defendant, upon a complaint alleging that the defendant had done business in the State for thirty months, without having itself, or by any officer, agent or other person in its behalf, prepared or deposited in the office of the commissioner of insurance of the State annual statements of its business, as required by the provision of section 1920 of the Revised Statutes of Wisconsin, and that the defendant had thereby become indebted to the plaintiff in the sum of $15,000, according to that provision.

By that section of the Revised Statutes of Wisconsin, it is enacted that the president or vice president and secretary of each fire insur- [267] ance corporation doing business in the State shall, annually, within the month of January, prepare and deposit in the office of the commissioner of insurance a statement, verified by their oaths, of the business of the corporation during the year, and of the condition thereof on the 31st day of December then next preceding, exhibiting various items, enumerated in the statute, as to its capital stock, property or assets, liabilities, income and expenditures, and any other items or facts which the commissioner of insurance may require, and that "for any failure to make and deposit such annual statement, or to promptly reply in writing to any inquiry addressed by the commissioner of in-

surance in relation to the business of any such corporation, or for willfully making any false statement therein, every such corporation or officer so failing or making such false statement shall forfeit five hundred dollars, and for neglecting to file such annual statement an additional five hundred dollars for every month that such corporation shall continue thereafter to transact any insurance business in this State until such statement be filed."

By the Statute of Wisconsin of 1885, chap. 395 (which took effect April 12, 1885), § 1, it is "made the duty of the commissioner of insurance to prosecute to final judgment, in the name of the State, or to compromise, settle or compound, every forfeiture incurred by an insurance corporation, by its failure to comply with, or for its violation of, any law of the State, of which he may be credibly informed;" and by § 2, "one half of every sum collected, paid or received by virtue of § 1 of this Act shall be paid into the state treasury, and the remainder shall belong to the commissioner of insurance, who shall pay all expenses incurred in prosecuting all actions brought to enforce the payment of such forfeitures, both in and out of the State, and shall pay all expenses incident to the collection of such forfeitures."

In the present action in this court, the defendant filed several pleas, the first of which was as follows:

"The defendant is a civil corporation, organized under the terms of the Revised Statutes of the State of Louisiana, sections 638-688, both [268] inclusive, and is authorized to effect fire insurances, and is subject to suit and required to determine its domicil in the city aforesaid, and to maintain and designate an officer of that Company to receive there citations and other judicial writs and notices. This duty has been fulfilled from the date of the organization, and the charter of the Company has been recorded and published, as those statutes require, in the office of the recorder of mortgages and a city paper, for the time defined in the statute. No other designation has been made or required of the defendant. The section six hundred and eighty-seven of the Revised Statutes of the United States defines the original jurisdiction of this court, and designates as subjects for the exercise of that jurisdiction, where a State is the complainant, citizens of States other than of the plaintiff or complainant; and, that there should be no error on the subject, the first section of the Fourteenth Amendment to the Constitution of the United States exactly describes all of those who are citizens. They are natural persons born or naturalized within the limits of the United States; and having a residence in any State determines the State in which he may have privilege or immunity as a citizen. Moreover, the complaint of the plaintiff discloses that this defendant is a fire insurance company, without political character or interstate relations, and had its origin and domicil in New Orleans, and that the said Corporation had offended the State of Wisconsin by imputed and alleged disobedience or inattention to her statute laws, and had incurred heavy forfeitures and penalties by such offenses to the sum stated in the demand, and for the collection of which fines and forfeitures this suit has been commenced in this court. But the defendant says that the statute of the United States, above cited, further defines the cause for the exercise of original jurisdiction, that the controversy should be of a civil nature. It excludes from cognizance of this court the punitive statutes and divers litigations arising out of the internal and peculiar or peevish regulations, accompanied with fines, forfeitures and arbitrary exactions, which a State may impose upon citizens or corporations of other States from a just cause, or from caprice or captiousness. The controversy must be of a civil nature, and not of the punitive nature, as shown by this record. Wherefore this defendant submits to this court that the complaint of this plaintiff does not show a cause within the original jurisdiction of the court, nor within the terms of the statutes of the United States."

To this plea the plaintiff filed a general demurrer, upon which the case was set down for argument.

Messrs. **Samuel Shellabarger**, *J. M. Wilson* and *H. W. Chynoweth*, for plaintiff:

The plea is bad for duplicity or multifariousness.

Rhode Island v. *Massachusetts*, 39 U. S. 14 Pet. 211 (10:423); *Lord* v. *Tyler*, 14 Pick. 164; *Dunning* v. *Owen*, 14 Mass. 157; *Hooper* v. *Jellison*, 22 Pick. 250.

The present action is in no sense penal.

Biddle v. *Wilkins*, 26 U. S. 1 Pet. 692 (7:318); *Pennington* v. *Gibson*, 57 U. S. 16 How. 65 (14: 847); Freem. Judg.; *Johnson* v. *Butler*, 2 Iowa, 535; *Taylor* v. *Root*, 4 Keyes, 335; *Thatcher* v. *Gammon*, 12 Mass. 268; *Spencer* v. *Brockway*, 1 Ohio, 259; *Indiana* v. *Helmer*, 21 Iowa, 370; *Healy* v. *Root*, 11 Pick. 390.

This Corporation is a citizen of another State, within section 2, article 3, and section 687 of the Revised Statutes.

Paul v. *Virginia*, 75 U. S. 8 Wall. 178 (19: 359); *Louisville, C. & C. R. R. Co.* v. *Letson*, 43 U. S. 2 How. 497 (11: 353); *Marshall* v. *Baltimore & O. R. R. Co.* 57 U. S. 16 How. 314 (14: 953); *Covington Drawbridge Co.* v. *Shepherd*, 61 U. S. 20 How. 233 (15:898); *Ohio & M. R. R. Co.* v. *Wheeler*, 66 U. S. 1 Black, 297 (17: 133); *National Steamship Co.* v. *Tugman*, 106 U. S. 120 (27:88); *Pennsylvania* v. *Wheeling & B. Bridge Co.* 54 U. S. 13 How. 518 (14:249); *Wisconsin* v. *Duluth*, 96 U. S. 379 (24:668); *Pennsylvania* v. *Quicksilver Min. Co.* 77 U. S. 10 Wall. 553 (19:998); *New England Mut. L. Ins. Co.* v. *Woodworth*, 111 U. S. 146 (28:381); *Lafayette Ins. Co.* v. *French*, 59 U. S. 18 How. 404 (15:451); *Baltimore & O. R. R. Co.* v. *Harris*, 79 U. S. 12 Wall. 65 (20:354); *Ex parte Sholleberger*, 96 U. S. 369 (24:853); *Baltimore & O. R. R. Co.* v. *Koontz*, 104 U. S. 5-10 (26:643, 644); *St. Clair* v. *Cox*, 106 U. S. 350 (27:222).

A corporation of one State doing business in another State is suable where its business is done, if the laws make provision to that effect.

Lafayette Ins. Co. v. *French*, 59 U. S. 18 How. 404 (15:451); *Baltimore & O. R. R. Co.* v. *Harris*, 79 U. S. 12 Wall. 65 (20:354).

Mr. **John A. Campbell**, for defendant:

Section 687 of the Revised Statutes of the United States invests this court with original jurisdiction of controversies of a civil nature, between a State and citizens of other States or aliens.

Chisholm v. *Georgia*, 2 U. S. 2 Dall. 419 (1: 440).

In a case between a State and its citizens in which a State is enforcing its penal laws, the supreme court cannot take original jurisdiction.

Cohens v. *Virginia*, 19 U. S. 6 Wheat. 264 (5: 257); *Houston* v. *Moore*, 16 U. S. 3 Wheat. 433 (4:428); *Respublica* v. *Cobbet*, 3 U. S. 3 Dall. 467 (1:683); *U. S.* v. *Lathrop*, 17 Johns. 4; *Halsey* v. *McLean*, 12 Allen, 438; *First Nat. Bank* v. Price, 33 Md. 487; *Dane* v. *Dane Mfg. Co.* 14 Gray, 488; *Duffies* v. *State*, 7 Wis. 672; *Flash* v. *Conn*, 109 U. S. 371 (27:966); Whart. Conf. L. § 833; Taylor, Law Corp. 764, 765.

Penal laws of foreign countries are strictly local.

Story, Confl. L. §§ 619-621; Westlake, Internat. L. § 403.

The *lex loci* must needs govern all criminal jurisdiction, from the nature of the thing and the purpose of the jurisdiction.

Foelix, Droit Internat. § 565, p. 572; 1 Martens, Cours de Pub. Droit, 104; 2 Calvo, Droit Int. 315, §§ 1162-1182.

Penal laws have no extraterritorial force.

Whart. Confl. L. 2d ed. §§ 833, 656, 4; *De Brimont* v. *Penniman*, 10 Blatchf. 436; *Commonwealth* v. *Green*, 17 Mass. 515; *Hill* v. *Frazier*, 22 Pa. 320; *Sims* v. *Sims*, 75 N. Y. 466; *Campbell* v. *State*, 23 Ala. 44; *Miller* v. *White*, 50 N. Y. 137.

The statute upon which the plaintiff in this court recovered its judgment in its court of general jurisdiction is a penal statute.

Harris, Cr. L. 4.

Mr. Justice **Gray**, after stating the case, delivered the opinion of the court:

This action is brought upon a judgment recovered by the State of Wisconsin in one of her own courts against the Pelican Insurance Company, a Louisiana corporation, for penalties imposed by a statute of Wisconsin for not
7] making returns to the insurance commissioner of the State, as required by that statute. The leading question argued at the bar is whether such an action is within the original jurisdiction of this court.

The ground on which the jurisdiction is invoked is not the nature of the cause, but the character of the parties, the plaintiff being one of the States of the Union, and the defendant a corporation of another of those States.

The Constitution of the United States, as originally established, ordains in art. 3, sec. 2, that the judicial power of the United States shall extend "to controversies between two or more States, between a State and citizens of another State, between citizens of different States, between citizens of the same State claiming lands under grants of different States, and between a State, or the citizens thereof, and foreign States, citizens or subjects;" and that in all cases "in which a State shall be party" this court shall have original jurisdiction. The Eleventh Article of Amendment simply declares that "the judicial power of the United States shall not be construed to extend to any suit, in law or equity, commenced or prosecuted against one of the United States by citizens of another State, or by citizens or subjects of any foreign State."

By the Constitution, therefore, this court has original jurisdiction of suits brought by a State against citizens of another State, as well as of controversies between two States; and it is well settled that a corporation created by a State is a citizen of the State, within the meaning of those provisions of the Constitution and Statutes of the United States which define the jurisdiction of the federal courts. *Kansas Pac. R. Co.* v. *Atchison, T. & S. F. R. Co.* 112 U. S. 414 [28:794]; *Paul* v. *Virginia*, 8 Wall. 168, 178 [19:357, 359]; *Pennsylvania* v. *Wheeling & B. Bridge Co.* 13 How. 518 [14:249].

Yet, notwithstanding the comprehensive words of the Constitution, the mere fact that a State is the plaintiff is not a conclusive test that the controversy is one in which this court is authorized to grant relief against another State or her citizens; and a consideration of the cases in which it has heretofore had occasion to pass upon the construction and effect of these provisions of the Constitution may throw light on the determination of the question before us.

As to "controversies between two or more [288]
States:" The most numerous class of which this court has entertained jurisdiction is that of controversies between two States as to the boundaries of their territory, such as were determined before the Revolution by the King in council, and under the Articles of Confederation (while there was no national judiciary) by committees or commissioners appointed by Congress. Story, Const. § 1681; *New Jersey* v. *New York*, 3 Pet. 461 [7:741]; *S. C.* 5 Pet. 284 [8:127]; 6 Pet. 323 [8:414]; *Rhode Island* v. *Massachusetts*, 12 Pet. 657, 724, 736, 759 [9: 1233, 1260, 1265, 1274]; *S. C.* 13 Pet. 23 [10:41]; 14 Pet. 210 [10:423]; 15 Pet. 233 [10:721]; 4 How. 591, 628 [11:1116, 1132]; *Missouri* v. *Iowa*, 7 How. 660 [12:861], and 10 How. 1 [13:303]; *Florida* v. *Georgia*, 17 How. 478 [15:181]; *Alabama* v. *Georgia*, 23 How. 505 [16:556]; *Virginia* v. *West Virginia*, 11 Wall. 39 [20:67]; *Missouri* v. *Kentucky*, Id. 395 [20:116]. See also *Georgia* v. *Stanton*, 6 Wall. 50, 72, 73 [18: 721, 723, 724].

The books of reports contain but few other cases in which the aid of this court has been invoked in controversies between two States.

In *Fowler* v. *Lindsey* and *Fowler* v. *Miller*, actions of ejectment were pending in the Circuit Court of the United States for the District of Connecticut between private citizens for lands over which the States of Connecticut and New York both claimed jurisdiction; and a writ of *certiorari* to remove those actions into this court as belonging exclusively to its jurisdiction was refused, because a State was neither nominally nor substantially a party to them. 3 Dall. 411 [1:658]. Upon a bill in equity afterwards filed in this court by the State of New York against the State of Connecticut to stay the actions of ejectment, this court refused the injunction prayed for, because the State of New York was not a party to them, and had no such interest in their decision as would support the bill. *New York* v. *Connecticut*, 4 Dall. 1, 3 [1: 715].

This court has declined to take jurisdiction of suits between States to compel the performance of obligations which, if the States had been independent nations, could not have been enforced judicially, but only through the political departments of their governments. Thus,

in *Kentucky* v. *Dennison*, 24 How. 66 [16:717], where the State of Kentucky, by her governor, [289] applied to this court in the exercise of its original jurisdiction for a writ of mandamus to the Governor of Ohio to compel him to surrender a fugitive from justice, this court, while holding that the case was a controversy between two States, decided that it had no authority to grant the writ. And in *New Hampshire* v. *Louisiana*, and *New York* v. *Louisiana*, 108 U. S. 76 [27:656], it was adjudged that a State, to whom, pursuant to her statutes, some of her citizens, holding bonds of another State, had assigned them in order to enable her to sue on and collect them for the benefit of the assignors, could not maintain a suit against the other State in this court. See also *Cherokee Nation* v. *Georgia*, 5 Pet. 1, 20, 28, 51, 75 [8:25, 32, 34, 43, 51].

In *South Carolina* v. *Georgia*, 93 U. S. 4 [23:782], this court, speaking by *Mr. Justice* Strong, left the question open, whether "a State, when suing in this court for the prevention of a nuisance in a navigable river of the United States, must not aver and show that it will sustain some special and peculiar injury therefrom, such as would enable a private person to maintain a similar action in another court;" and dismissed the bill, because no unlawful obstruction of navigation was proved. P. 14 [785].

As to "controversies between a State and the citizens of another State:" The object of vesting in the courts of the United States jurisdiction of suits by one State against the citizens of another was to enable such controversies to be determined by a national tribunal, and thereby to avoid the partiality, or suspicion of partiality, which might exist if the plaintiff State were compelled to resort to the courts of the State of which the defendants were citizens. Federalist, No. 80; *Chief Justice* Jay, in *Chisholm* v. *Georgia*, 2 Dall. 419, 475 [1:440, 464]; Story, Const. §§ 1638, 1682. The grant is of "judicial power," and was not intended to confer upon the courts of the United States jurisdiction of a suit or prosecution by the one State, of such a nature that it could not, on the settled principles of public and international law, be entertained by the judiciary of the other State at all.

By the law of England and of the United States, the penal laws of a country do not reach [290] beyond its own territory, except when extended by express treaty or statute to offenses committed abroad by its own citizens; and they must be administered in its own courts only, and cannot be enforced by the courts of another country. Wheat. Internat. L. 8th ed. §§ 113, 121.

Chief Justice Marshall stated the rule in the most condensed form, as an incontrovertible maxim: "The courts of no country execute the penal laws of another." *The Antelope*, 10 Wheat. 66, 123 [6:268, 282].

The only cases in which the courts of the United States have entertained suits by a foreign State have been to enforce demands of a strictly civil nature. *The Sapphire*, 11 Wall. 164 [20:127]; *King of Spain* v. *Oliver*, 2 Wash. 429, and Pet. C. C. 217, 276. The case of *The Sapphire* was a libel in admiralty, filed by the late Emperor of the French, and prosecuted by the French Republic after his deposition, to recover damages for a collision between an American ship and a French transport; and *Mr. Justice* Bradley, delivering the judgment of this court sustaining the suit, said: "A foreign sovereign, as well as any other foreign person, who has a demand of a civil nature against any person here, may prosecute it in our courts." P. 167 [130]. The case of *The King of Spain* v. *Oliver*, although a suit to recover duties imposed by the revenue laws of Spain, was not founded upon those laws, or brought against a person who had broken them, but was in the nature of an action of assumpsit against other persons alleged to be bound by their own contract to pay the duties; and the action failed because no express or implied contract of the defendants was proved. Pet. C. C. 286-290.

The rule that the courts of no country execute the penal laws of another applies not only to prosecutions and sentences for crimes and misdemeanors, but to all suits in favor of the State for the recovery of pecuniary penalties for any violation of statutes for the protection of its revenue, or other municipal laws, and to all judgments for such penalties. If this were not so, all that would be necessary to give ubiquitous effect to a penal law would be to put the claim for a penalty into the shape of a judgment. Whart. Confl. L. § 833; Westlake, Internat. L. 1st ed. § 388; Piggott, Foreign Judg. 209, 210. [29

Lord Kames, in his Principles of Equity, cited and approved by *Mr. Justice* Story in his Commentaries on the Conflict of Laws, after having said, "The proper place for punishment is where the crime is committed, and no society takes concern in any crime but what is hurtful to itself;" and recognizing the duty to enforce foreign judgments or decrees for civil debts or damages, adds: "But this includes not a decree decerning for a penalty; because no court reckons itself bound to punish, or to concur in punishing, any delict committed *extra territorium*." 2 Kames, Equity, 3d ed. 326, 366; Story, Confl. L. §§ 600, 622.

It is true that if the prosecution in the courts of one country for a violation of its municipal law is *in rem*, to obtain a forfeiture of specific property within its jurisdiction, a judgment of forfeiture, rendered after due notice, and vesting the title of the property in the State, will be recognized and upheld in the courts of any other country in which the title to the property is brought in issue. *Rose* v. *Himely*, 4 Cranch, 241 [2:608]; *Hudson* v. *Guestier*, Id. 293 [2:625]; *Bradstreet* v. *Neptune Ins. Co.* 3 Sumn. 600, 605; Piggott, Foreign Judg. 264. But the recognition of a vested title in property is quite different from the enforcement of a claim for a pecuniary penalty. In the one case, a complete title in the property has been acquired by the foreign judgment; in the other, further judicial action is sought to compel the payment by the defendant to the plaintiff of money in which the plaintiff has not as yet acquired any specific right.

The application of the rule to the courts of the several States and of the United States is not affected by the provisions of the Constitution and of the Act of Congress, by which the judgments of the courts of any State are to have such faith and credit given to them in every court within the United States as they have by law or usage in the State in which

they were rendered. Const. art. 4, sec. 1; Act May 26, 1790, chap. 11, 1 Stat. at L. 122; Rev. Stat. § 905.

Those provisions establish a rule of evidence, rather than of jurisdiction. While they make the record of a judgment, rendered after due notice in one State, conclusive evidence in the courts of another State, or of the United States, of the matter adjudged, they do not affect the jurisdiction, either of the court in which the judgment is rendered, or of the court in which it is offered in evidence. Judgments recovered in one State of the Union, when proved in the courts of another government, whether State or national, within the United States, differ from judgments recovered in a foreign country in no other respect than in not being re-examinable on their merits, nor impeachable for fraud in obtaining them, if rendered by a court having jurisdiction of the cause and of the parties. *Hanley* v. *Donoghue*, 116 U. S. 1, 4 [29:535, 536.]

In the words of *Mr. Justice* Story, cited and approved by *Mr. Justice* Bradley speaking for this court, "The Constitution did not mean to confer any new power upon the States, but simply to regulate the effect of their acknowledged jurisdiction over persons and things within their territory. It did not make the judgments of other States domestic judgments to all intents and purposes, but only gave a general validity, faith and credit to them as evidence. No execution can issue upon such judgments without a new suit in the tribunals of other States. And they enjoy not the right of priority or lien which they have in the State where they are pronounced, but that only which the *lex fori* gives to them by its own laws in their character of foreign judgments." Story, Confl. L. § 609; *Thompson* v. *Whitman*, 18 Wall. 457, 462, 463 [21:897, 899.]

A judgment recovered in one State, as was said by *Mr. Justice* Wayne, delivering an earlier judgment of this court, "does not carry with it, into another State, the efficacy of a judgment upon property or persons, to be enforced by execution. To give it the force of a judgment in another State, it must be made a judgment there; and can only be executed in the latter as its laws may permit." *McElmoyle* v. *Cohen*, 13 Pet. 312, 325 [10:177, 183.]

The essential nature and real foundation of a cause of action are not changed by recovering judgment upon it; and the technical rules, which regard the original claim as merged in the judgment, and the judgment as implying a promise by the defendant to pay it, do not preclude a court, to which a judgment is presented for affirmative action (while it cannot go behind the judgment for the purpose of examining into the validity of the claim), from ascertaining whether the claim is really one of such a nature that the court is authorized to enforce it. *Louisiana* v. *New Orleans*, 109 U. S. 285, 288, 291 [27:936-938]; *Louisiana* v. *St. Martin's Parish*, 111 U. S. 716 [28:574]; *Chase* v. *Curtis*, 113 U. S. 452, 464 [28:1038, 1042]; *Boynton* v. *Ball*, 121 U. S. 457, 466 [30:985, 986].

The only cases cited in the learned argument for the plaintiff, which tend to support the view that the courts of one State will maintain an action upon a judgment rendered in another State for a penalty incurred by a violation of her municipal laws, are *Spencer* v. *Brockway*, 1 Ohio, 259, in which an action was sustained in Ohio upon a judgment rendered in Connecticut upon a forfeited recognizance to answer for a violation of the penal laws of that State; *Healy* v. *Root*, 11 Pick. 389, in which an action was sustained in Massachusetts upon a judgment rendered in Pennsylvania in a *qui tam* action on a penal statute for usury; and *Indiana* v. *Helmer*, 21 Iowa, 370, in which an action by the State of Indiana was sustained in the courts of Iowa upon a judgment rendered in Indiana in a prosecution for the maintenance of a bastard child.

The decision in each of those cases appears to have been mainly based upon the supposed effect of the provisions of the Constitution and the Act of Congress as to the faith and credit due to a judgment rendered in another State, which had not then received a full exposition from this court; and the other reasons assigned are not such as to induce us to accept those decisions as satisfactory precedents to guide our judgment in the present case.

From the first organization of the courts of the United States, nearly a century ago, it has always been assumed that the original jurisdiction of this court over controversies between a State and citizens of another State, or of a foreign country, does not extend to a suit by a [294] State to recover penalties for a breach of her own municipal law. This is shown both by the nature of the cases in which relief has been granted or sought, and by Acts of Congress and opinions of this court more directly bearing upon the question.

The earliest controversy in this court, so far as appears by the reports of its decisions, in which a State was the plaintiff, is that of *Georgia* v. *Brailsford*.

At February Term, 1792, the State of Georgia filed in this court a bill in equity against Brailsford, Powell and Hopton, British merchants and copartners, alleging that on August 4, 1782, during the Revolutionary War, the State of Georgia enacted a law, confiscating to the State all the property within it (including debts due to British merchants or others residing in Great Britain) of persons who had been declared guilty or convicted, in one or other of the United States, of offenses which induced a like confiscation of their property within the States of which they were citizens; and also sequestering, and directing to be collected for the benefit of the State, all debts due to merchants or others residing in Great Britain, and confiscating to the State all the property belonging and debts due to subjects of Great Britain; and that by the operation of this law all the debts due from citizens of Georgia to persons who had been subjected to the penalties of confiscation in other States, and of British merchants and others residing in Great Britain, and of all other British subjects, were vested in the State of Georgia. The bill further alleged that one Spalding, a citizen of Georgia, was indebted to the defendants upon a bond, which by virtue of this law was transferred from the obligees and vested in the State; that Brailsford was a citizen of Great Britain, and resided there from 1767 till after the passing of the law, and that Hopton's and

Powell's property (debts excepted) had been confiscated by Acts of the Legislature of South Carolina; that Brailsford, Hopton and Powell had brought an action and recovered judgment against Spalding upon this bond, and had taken out execution against him, in the Circuit Court of the United States for the District of [295] Georgia, and that the parties to that action had confederated together to defraud the State. Upon the filing of the bill, this court, without expressing any opinion upon the merits of the case, granted a temporary injunction to stay the money in the hands of the marshal of the circuit court, until the title to the bond as between the State of Georgia and the defendants could be tried. 2 Dall. 402 [1: 433].

At February Term, 1793, upon a motion to dissolve that injunction, this court held that if the State of Georgia had the title in the debt (upon which no opinion was then expressed) she had an adequate remedy at law, by action upon the bond; but, in order that the money might be kept for the party to whom it belonged, ordered the injunction to be continued till the next term, and if Georgia should not then have instituted her action at common law, to be dissolved. 2 Dall. 415 [1: 438].

Such an action was brought accordingly, and was tried by a jury at the bar of this court at February Term, 1794, when the court was of opinion, and so charged the jury, that the Act of the State of Georgia did not vest the title in the debt in the State at the time of passing it, and that by the terms of the Act the debt was not confiscated, but only sequestered, and the right of the obligees to recover it revived on the treaty of peace; and the jury returned a verdict for the defendants. 3 Dall. 1 [1: 483.]

It thus appears that in *Georgia* v. *Brailsford* the State did not sue for a penalty, or upon a a judgment for a penalty, imposed by her municipal law, but to assert a title, claimed to have absolutely vested in her, not under an ordinary act of municipal legislation, but by an act of war, done by the State of Georgia as one of the United States (the Congress of which had not then been vested with the power of legislating to that effect) to assist them against their common enemy by confiscating the property of his subjects; and that the only point decided by this court, except as to matters of procedure, was that the title had not vested in the State of Georgia by the act in question.

In *Pennsylvania* v. *Wheeling & B. Bridge Co.* 54 U. S. 13 How. 518 [14: 249], this court, upon a bill in equity by the State of Pennsylvania against a corporation of Virginia, ordered the [296] taking down or heightening of a bridge built by the defendant over the Ohio River, under a statute of Virginia, which the court held to have obstructed the navigation of the river, in violation of a compact of the State, confirmed by Act of Congress. P. 561 [267]. See also *Willamette Iron Bridge Co.* v. *Hatch*, 125 U. S. 1, 15, 16 [31: 629, 634, 635.] All the judges who took part in the decision in the *Wheeling Bridge Case* treated the suit as brought to protect the property of the State of Pennsylvania. *Mr. Justice* McLean, delivering the opinion of the majority of the court, said: "In the present case, the State of Pennsylvania claims nothing connected with the exercise of its sovereignty. It asks from the court a protection of its property on the same ground and to the same extent as a corporation or individual may ask it." 13 How. 560, 561 [14: 266, 267.] So *Chief Justice* Taney, who dissented from the judgment, said: "She proceeds, and is entitled to proceed, only for the private and particular injury to her property which this public nuisance has occasioned." Id. 589 [279.] And *Mr. Justice* Daniel, the other dissenting judge, took the same view. Id. 596 [282].

Mississippi v. *Johnson*, 4 Wall. 475 [18: 437], and *Georgia* v. *Stanton*, 6 Wall. 50 [18: 721], were cases of unsuccessful attempts by a State, by a bill in equity against the President or the Secretary of War, described as a citizen of another State, to induce this court to restrain the defendant from executing, in the course of his official duty, an Act of Congress alleged to unconstitutionally affect the political rights of the State.

Texas v. *White*, 7 Wall. 700 [19: 227]; *Florida* v. *Anderson*, 91 U. S. 667 [23: 290], and *Alabama* v. *Burr*, 115 U. S. 413 [29: 435], were suits to protect rights of property of the State. In *Texas* v. *White* the bill was maintained to assert the title of the State of Texas to bonds belonging to her, and held by the defendants, citizens of other States, under an unlawful negotiation and transfer of the bonds. In *Florida* v. *Anderson* the suit concerned the title to a railroad, and was maintained because the State of Florida was the holder of bonds secured by a statutory lien upon the road, and had an interest in an internal improvement fund pledged to secure the payment of those bonds. In *Alabama* v. *Burr* the object of the suit was to indemnify the State of Alabama against a pecu- [297] niary liability which she alleged that she had incurred by reason of fraudulent acts of the defendants; and upon the facts of the case the bill was not maintained.

In *Pennsylvania* v. *Quicksilver Min. Co.* 10 Wall. 553 [19: 998], an action brought in this court by the State of Pennsylvania was dismissed for want of jurisdiction, without considering the nature of the claim, because the record did not show that the defendant was a corporation created by another State.

In *Wisconsin* v. *Duluth*, 96 U. S. 379 [24: 668], the bill sought to restrain the improvement of a harbor on Lake Superior, according to a system adopted and put in execution under authority of Congress, and was for that reason dismissed, without considering the general question whether a State, in order to maintain a suit in this court, must have some proprietary interest that has been affected by the defendant.

The cases heretofore decided by this court in the exercise of its original jurisdiction have been referred to, not as fixing the outermost limit of that jurisdiction, but as showing that the jurisdiction has never been exercised, or even invoked, in any case resembling the case at bar.

The position that the jurisdiction conferred by the Constitution upon this court, in cases to which a State is a party, is limited to controversies of a civil nature, does not depend upon mere inference from the want of any precedent to the contrary, but has express legislative and judicial sanction.

By the Judiciary Act of September 24, 1789, chap. 20, § 13, it was enacted that "the supreme court shall have exclusive jurisdiction of controversies of a civil nature, where a State is a party, except between a State and its citizens; and except also between a State and citizens of other States, or aliens, in which latter case it shall have original but not exclusive jurisdiction." 1 Stat. at L. 80. That Act, which has continued in force ever since, and is embodied in § 687 of the Revised Statutes, was passed by the first Congress assembled under the Constitution, many of whose members had taken part in framing that instrument, and is contemporaneous and weighty evidence of its true meaning. *Ames* v. *Kansas*, 111 U. S. 449, 463, 464 [28:482, 488].

[298] In *Chisholm* v. *Georgia*, 2 Dall. 419 [1:440], decided at August Term, 1793, in which the judges delivered their opinions *seriatim*, *Mr. Justice* Iredell, who spoke first, after citing the provisions of the original Constitution, and of § 13 of the Judiciary Act of 1789, said: "The Constitution is particular in expressing the parties who may be the objects of the jurisdiction in any of these cases, but, in respect to the subject matter upon which such jurisdiction is to be exercised, uses the word 'controversies' only. The Act of Congress more particularly mentions *civil* controversies, a qualification of the general word in the Constitution, which I do not doubt every reasonable man will think was well warranted, for it cannot be presumed that the general word 'controversies' was intended to include any proceedings that relate to criminal cases, which, in all instances that respect the same government only, are uniformly considered of a local nature, and to be decided by its particular laws." Pp. 431, 432 [445]. None of the other judges suggested any doubt upon this point; and *Chief Justice* Jay, in summing up the various classes of cases to which the judicial power of the United States extends, used "demands" (a word quite inappropriate to designate criminal or penal proceedings) as including everything that a State could prosecute against citizens of another State in a national court. P. 475 [464].

In *Cohens* v. *Virginia*, 6 Wheat. 264 [5:257], decided at October Term, 1821, *Chief Justice* Marshall, after showing that the Constitution had given jurisdiction to the courts of the Union in two classes of cases, in one of which, comprehending cases arising under the Constitution, laws and treaties of the United States, the jurisdiction depended on the character of the cause, and in the other, comprehending controversies between two or more States, or between a State and citizens of another State, the jurisdiction depended entirely on the character of the parties, said: "The original jurisdiction of the supreme court, in cases where a State is a party, refers to those cases in which, according to the grant of power made in the preceding clause, jurisdiction might be exercised in consequence of the character of the party, and an original suit might be instituted [299] in any of the federal courts; not to those cases in which an original suit might not be instituted in a federal court. Of the last description is every case between a State and its citizens, and perhaps every case in which a State is enforcing its penal laws. In such cases, therefore, the supreme court cannot take original jurisdiction." Pp. 398, 399 [289, 290].

The soundness of the definition, given in the Judiciary Act of 1789, of the cases coming within the original jurisdiction of this court by reason of a State being a party, as "controversies of a civil nature," was again recognized by this court in *Rhode Island* v. *Massachusetts*, decided at January Term, 1838. 12 Pet. 657, 722, 731 [9:1233, 1259, 1263].

The statute of Wisconsin, under which the State recovered in one of her own courts the judgment now and here sued on, was in the strictest sense a penal statute, imposing a penalty upon any insurance company of another State, doing business in the State of Wisconsin without having deposited with the proper officer of the State a full statement of its property and business during the previous year. Wis. Rev. Stat. § 1920. The cause of action was not any private injury, but solely the offense committed against the State by violating her law. The prosecution was in the name of the State, and the whole penalty, when recovered, would accrue to the State, and be paid, one half into her treasury, and the other half to her insurance commissioner, who pays all expenses of prosecuting for and collecting such forfeitures. Wis. Stat. 1885, chap. 395. The real nature of the case is not affected by the forms provided by the law of the State for the punishment of the offense. It is immaterial whether, by the law of Wisconsin, the prosecution must be by indictment or by action; or whether, under that law, a judgment there obtained for the penalty might be enforced by execution, by *scire facias*, or by a new suit. In whatever form the State pursues her right to punish the offense against her sovereignty, every step of the proceeding tends to one end, the compelling the offender to pay a pecuniary fine by way of punishment for the offense.

This court, therefore, cannot entertain an [300] original action to compel the defendant to pay to the State of Wisconsin a sum of money in satisfaction of the judgment for that fine.

The original jurisdiction of this court is conferred by the Constitution, without limit of the amount in controversy, and Congress has never imposed (if indeed it could impose) any such limit. If this court has original jurisdiction of the present case, it must follow that any action upon a judgment obtained by a State in her own courts against a citizen of another State for the recovery of any sum of money, however small, by way of a fine for any offense, however petty, against her laws, could be brought in the first instance in the Supreme Court of the United States. That cannot have been the intention of the Convention in framing, or of the people in adopting, the Federal Constitution.

Judgment for the defendant on the demurrer.

ARKANSAS VALLEY SMELTING COMPANY, *Plff. in Err.*, [379]

v.

BELDEN MINING COMPANY.

(See S. C. Reporter's ed. 379-390.)

Rights, when not assignable—contract to deliver ore, when not assignable.

1. Rights arising out of contract cannot be transferred if they are coupled with liabilities, or if they involve a relation of personal confidence such that the party whose agreement conferred those rights must have intended them to be exercised only by him in whom he actually confided.

2. A contract by a mining company, to deliver lead ore from its mines, the ore to be assayed, after delivery, by the parties and, if they could not agree, by an umpire, and the price to be ascertained and paid according to the result of the assay, no security being given for payment except the character and solvency of the parties to whom the ore was to be delivered.—*Held* to be within the above rule; and that defendant could not be compelled to accept the liability of any other person or corporation as a substitute for the liability of those with whom it contracted.

3. Assignment by operation of law, as in the case of an executor, is quite different from assignment by act of the party.

[No. 197.]

Submitted April 2, 1888. Decided May 14, 1888.

IN ERROR to the Circuit Court of the United States for the District of Colorado, to review a judgment for defendant in an action brought by a smelting company against a mining company to recover damages for the breach of a contract to deliver ore, made by defendant with other persons and assigned to plaintiff. *Affirmed.*

Statement by *Mr. Justice* **Gray:**

This was an action brought by a smelting company, incorporated by the laws of Missouri, against a mining company, incorporated by the laws of Maine, and both doing business in Colorado by virtue of a compliance with its laws, to recover damages for the breach of a contract to deliver ore, made by the defendant with Billing and Eilers, and assigned to the plaintiff. The material allegations of the complaint were as follows:

On July 12, 1881, a contract in writing was made between the defendant of the first part and Billing and Eilers of the second part, by which it was agreed that the defendant should sell and deliver to Billing and Eilers at their smelting works in Leadville 10,000 tons of carbonate lead ore from its mines at Red Cliff, at the rate of at least 50 tons a day, beginning upon the completion of a railroad from Leadville to Red Cliff, and continuing until the whole should have been delivered, and that "all ore so delivered shall at once upon the delivery thereof become the property of the second party;" and it was further agreed as follows:

"The value of said ore and the price to be [380] paid therefor shall be fixed in lots of about one hundred tons each; that is to say, as soon as such a lot of ore shall have been delivered to said second party, it shall be sampled at the works of said second party, and the sample assayed by either or both of the parties hereto, and the value of such lots of ore shall be fixed by such assay; in case the parties hereto cannot agree as to such assay, they shall agree upon some third disinterested and competent party, whose assay shall be final. The price to be paid by said second party for such lot of ore shall be fixed on the basis hereinafter agreed upon by the closing New York quotations for silver and common lead, on the day of the delivery of sample bottle, and so on until all of said ore shall have been delivered.

"Said second party shall pay said first party at said Leadville for each such lot of ore at once, upon the determination of its assay value, at the following prices," specifying, by reference to the New York quotations, the price to be paid per pound for the lead contained in the ore, and the price to be paid for the silver contained in each ton of ore, varying according to the proportions of silica and of iron in the ore.

The complaint further alleged that the railroad was completed on November 30, 1881, and thereupon the defendant, under and in compliance with the contract, began to deliver ore to Billing and Eilers at their smelting works, and delivered 167 tons between that date and January 1, 1882, when "the said firm of Billing and Eilers was dissolved, and the said contract and the business of said firm, and the smelting works at which said ores were to be delivered, were sold, assigned and transferred to G. Billing, whereof the defendant had due notice;" that after such transfer and assignment the defendant continued to deliver ore under the contract, and between January 1 and April 21, 1882, delivered to Billing at said smelting works 894 tons; that on May 1, 1882, the contract, together with the smelting works, was sold and conveyed by Billing to the plaintiff, whereof the defendant had due notice; that the defendant then ceased to deliver ore under the contract, and afterwards refused to perform the contract, and gave notice to the plaintiff that it considered the contract canceled and annulled; that all the [381] ore so delivered under the contract was paid for according to its terms; that "the plaintiff and its said assignors were at all times during their respective ownerships ready, able and willing to pay on the like terms for each lot as delivered, when and as the defendant should deliver the same, according to the terms of said contract; and the time of payment was fixed on the day of delivery of the 'sample bottle,' by which expression was, by the custom of the trade, intended the completion of the assay or test by which the value of the ore was definitely fixed;" and that "the said Billing and Eilers, and the said G. Billing, their successor and assignee, at all times since the delivery of said contract, and during the respective periods when it was held by them respectively, were able, ready and willing to and did comply with and perform all the terms of the same, so far as they were by said contract required; and the said plaintiff has been at all times able, ready and willing to perform and comply with the terms thereof, and has from time to time, since the said contract was assigned to it, so notified the defendant."

The defendant demurred to the complaint for various reasons, one of which was that the contract therein set forth could not be assigned, but was personal in its nature, and could not, by the pretended assignment thereof to the plaintiff, vest the plaintiff with any power to sue the defendant for the alleged breach of contract.

The circuit court sustained the demurrer, and gave judgment for the defendant; and the plaintiff sued out this writ of error.

Messrs. **R. S. Morrison, T. M. Patterson** and **C. S. Thomas,** for plaintiff in error:

The court below erred in holding this agreement to be nonassignable.

Devlin v. *Mayor of N. Y.* 63 N. Y. 8; *Hyde* v. *Dean of Windsor,* Cro. Eliz. 552; *Hambly* v.

Trott, Cowp. 371; *Marshall* v. *Broadhurst*, 1 Tyrw. 348; *S. C.* 1 Cromp. & J. 403; *Sibont* v. *Kirkman*, 1 Mees. & W. 418; *S. C.* Tyrw. & G. 777; *Wentworth* v. *Cock*, 10 Ad. & El. 42; *S. C.* 37 Eng. C. L. 33; Wms. Exrs. 1227; *Walker* v. *Hull*, 1 Lev. 177; *Hyde* v. *Skinner*, 2 P. Wms. 196; *Werner* v. *Humphreys*, 3 Scott, N. R. 226; *Berisford* v. *Woodroff*, Cro. Jac. 404; *S. C.* 1 Rolle, Rep. 433; *Petrie* v. *Voorhees*, 18 N. J. Eq. 285; *Woods* v. *Ridley*, 27 Miss. 119; *Pringle* v. *McPherson*, 2 Desaus. Eq. 524; *White* v. *Commonwealth*, 39 Pa. 167; *Dickinson* v. *Calahan*, 19 Pa. 227; *Robson* v. *Drummond*, 2 Barn. & Ad. 303; *British Wagon Co.* v. *Lea*, L. R. 5 Q. B. Div. 149; *Sears* v. *Conover*, 3 Keyes, 113; *Tyler* v. *Barrows*, 6 Robt. 104; *Horner* v. *Wood*, 23 N. Y. 350; *Taylor* v. *Palmer*, 31 Cal. 240; *Parsons* v. *Woodward*, 22 N. J. L. 196; *Philadelphia* v. *Lockhardt*, 73 Pa. 211; *Lafferty* v. *Rutherford*, 5 Ark. 649; *St. Louis* v. *Clemens*, 42 Mo. 69; *Groot* v. *Story*, 41 Vt. 533.

(No counsel appeared for defendant in error.)

387] *Mr. Justice* **Gray** delivered the opinion of the court:

If the assignment to the plaintiff of the contract sued on was valid, the plaintiff is the real party in interest, and as such entitled, under the practice in Colorado, to maintain this action in its own name. Rev. Stat. § 914; Colorado Code Civ. Pro. § 3; *Albany & Rensselaer Iron & Steel Co.* v. *Lundberg*, 121 U. S. 451 [30: 982]. The vital question in the case, therefore, is whether the contract between the defendant and Billing and Eilers was assignable by the latter, under the circumstances stated in the complaint.

At the present day, no doubt, an agreement to pay money, or to deliver goods, may be assigned by the person to whom the money is to be paid or the goods are to be delivered, if there is nothing in the terms of the contract, whether by requiring something to be afterwards done by him, or by some other stipulation, which manifests the intention of the parties that it shall not be assignable. But everyone has a right to select and determine with whom he will contract, and cannot have another person thrust upon him without his consent. In the familiar phrase of *Lord* Denman, "You have the right to the benefit you anticipate from the character, credit and substance of the party with whom you contract." *Humble* v. *Hunter*, 12 Q. B. 310, 317; *Winchester* v. *Howard*, 97 Mass. 303, 305; *Boston Ice Co.* v. *Potter*, 123 Mass. 28; *King* v. *Batterson*, 13 R. I. 117, 120; *Lansden* v. *McCarthy*, 45 Mo. 106. The rule upon this subject, as applicable to the case at bar, is well expressed in a recent English treatise. "Rights arising out of contract cannot be transferred if they are coupled with liabilities, or if they involve a relation of personal confidence such that the party whose agreement conferred those rights must have intended them to be exercised only by him in whom he actually confided." Pollock, Cont. 4th ed. 425.

The contract here sued on was one by which the defendant agreed to deliver ten thousand tons of lead ore from its mines to Billing and Eilers at their smelting works. The ore was to be delivered at the rate of fifty tons a day and it was expressly agreed that it should become the property of Billing and Eilers as soon as delivered. The price was not fixed by the contract, or payable upon the delivery of the ore. But, as often as a hundred tons of ore had been delivered, the ore was to be assayed by the parties or one of them, and, if they could not agree, by an umpire; and it was only after all this had been done, and according to the result of the assay, and the proportions of lead, silver, silica and iron, thereby proved to be in the ore, that the price was to be ascertained and paid. During the time that must elapse between the delivery of the ore, and the ascertainment and payment of the price, the defendant had no security for its payment, except in the character and solvency of Billing and Eilers. The defendant, therefore, could not be compelled to accept the liability of any other person or corporation as a substitute for the liability of those with whom it had contracted.

The fact that upon the dissolution of the firm of Billing and Eilers, and the transfer by Eilers to Billing of this contract, together with the smelting works and business of the partnership, the defendant continued to deliver ore to Billing according to the contract, did not oblige the defendant to deliver ore to a stranger, to whom Billing had undertaken, without the defendant's consent, to assign the contract. The change in a partnership by the coming in or the withdrawal of a partner might perhaps be held to be within the contemplation of the parties originally contracting; but, however that may be, an assent to such a change in the [389] one party cannot estop the other to deny the validity of a subsequent assignment of the whole contract to a stranger. The technical rule of law, recognized in *Murray* v. *Harway*, 56 N. Y. 337, cited for the plaintiff, by which a lessee's express covenant not to assign has been held to be wholly determined by one assignment with the lessor's consent, has no application to this case.

The cause of action set forth in the complaint is not for any failure to deliver ore to Billing, before his assignment to the plaintiff (which might perhaps be an assignable chose in action), but it is for a refusal to deliver ore to the plaintiff since this assignment. Performance and readiness to perform by the plaintiff and its assignors, during the periods for which they respectively held the contract, is all that is alleged; there is no allegation that Billing is ready to pay for any ore delivered to the plaintiff. In short, the plaintiff undertakes to step into the shoes of Billing, and to substitute its liability for his. The defendant had a perfect right to decline to assent to this, and to refuse to recognize a party, with whom it had never contracted, as entitled to demand further deliveries of ore.

The cases cited in the careful brief of the plaintiff's counsel, as tending to support this action, are distinguishable from the case at bar, and the principal ones may be classified as follows:

First. Cases of agreements to sell and deliver goods for a fixed price, payable in cash on delivery, in which the owner would receive the price at the time of parting with his property, nothing further would remain to be done by the purchaser, and the rights of the seller could

not be affected by the question whether the price was paid by the person with whom he originally contracted or by an assignee. *Sears* v. *Conover*, 3 Keyes, 113, and 4 Abb. App. Dec. 179; *Tyler* v. *Barrows*, 6 Robt. 104.

Second. Cases upon the question how far executors succeed to rights and liabilities under a contract of their testator. *Hambly* v. *Trott*, Cowp. 371, 375; *Wentworth* v. *Cock*, 10 Ad. & El. 42, and 2 Per. & Dav. 251; Williams, Exec. 7th ed. 1723-1725. Assignment by operation [390] of law, as in the case of an executor, is quite different from assignment by act of the party; and the one might be held to have been in the contemplation of the parties to this contract, although the other was not. A lease, for instance, even if containing an express covenant against assignment by the lessee, passes to his executor. And it is by no means clear that an executor would be bound to perform, or would be entitled to the benefit of such a contract as that now in question. *Dickinson* v. *Calahan*, 19 Pa. 227.

Third. Cases of assignments by contractors for public works, in which the contracts, and the statutes under which they were made, were held to permit all persons to bid for the contracts, and to execute them through third persons. *Taylor* v. *Palmer*, 31 Cal. 240, 247; *St. Louis* v. *Clemens*, 42 Mo. 69; *Philadelphia* v. *Lockhardt*, 73 Pa. 211; *Devlin* v. *Mayor of N. Y.* 63 N. Y. 8.

Fourth. Other cases of contracts assigned by the party who was to do certain work, not by the party who was to pay for it, and in which the question was whether the work was of such a nature that it was intended to be performed by the original contractor only. *Robson* v. *Drummond*, 2 Barn. & Ad. 303; *British Waggon Co.* v. *Lea*, L. R. 5 Q. B. Div. 149; *Parsons* v. *Woodward*, 22 N. J. L. 196.

Without considering whether all the cases cited were well decided, it is sufficient to say that none of them can control the decision of the present case.

Judgment affirmed.

---

[390] JAMES MOSHER, *Plff. in Err.*,

v.

ST. LOUIS, IRON MOUNTAIN AND SOUTHERN RAILWAY COMPANY.

(See S. C. Reporter's ed. 390-396.)

Railroad passenger—contract on ticket—liability of railroad—demurrer.

1. The right of a passenger to be carried upon a railroad upon a "tourist's" or "round-trip" ticket depends upon the written contract signed by him thereon, and not upon representations made by an officer of the company.

2. Where, by the contract, a stamp upon the ticket made by an agent was a condition precedent to the right to a return passage, no agent or employee of the railroad company was authorized to waive the condition.

3. Where, by the contract contained on defendant's ticket, the defendant company is not to be responsible beyond its own line, it is not responsible to the plaintiff for the failure of another company to have an agent at the further end of the route.

4. A demurrer admits only the facts alleged, and not the conclusion of law inserted in the pleading demurred to.

[No. 246.]

Argued April 20, 1888. Decided May 14, 1888.

IN ERROR to the Circuit Court of the United States for the Eastern District of Missouri, to review a judgment for defendant, upon demurrer, in an action by a passenger against a railroad corporation for putting him off one of its trains. *Affirmed.*

Reported below in 28 Fed. Rep. 826. See also 17 Fed. Rep. 880, and 5 McCrary, 462.

Statement by *Mr. Justice* **Gray:** [391

This was an action by a passenger against a railroad corporation for putting him off one of its trains. The allegations of the amended petition were in substance as follows:

On April 9, 1883, the plaintiff purchased of the defendant at St. Louis a ticket expressed on its face to be "good for one first class passage to Hot Springs, Ark., and return, when officially stamped on back hereof and presented with coupons attached," and containing a "tourist's contract," signed by the plaintiff as well as by the ticket agent, by which, "in consideration of the reduced rate at which this ticket is sold," the plaintiff agreed, "with the several companies" over whose lines the ticket entitled him to be carried, upon certain terms and conditions, of which those material to be here stated were as follows:

"1. That in selling this ticket the St. Louis, Iron Mountain and Southern Railway Company acts only as agent and is not responsible beyond its own line."

"4. That it is good for going passage only five (5) days from the date of sale, as stamped [392 on back and written below.

"5. That it is not good for return passage unless the holder identifies himself as the original purchaser to the satisfaction of the authorized agent of the Hot Springs Railroad at Hot Springs, Ark., within eighty-five (85) days from date of sale, and when officially signed and dated in ink and duly stamped by said agent this ticket shall then be good only five (5) days from such date.

"6. That I, the original purchaser, hereby agree to sign my name and otherwise identify myself as such, whenever called upon to do so by any conductor or agent of the line or lines over which this ticket reads, and on my failure or refusal that this ticket shall become thereafter void."

"12. And it is expressly agreed and understood by me that no agent or employee of any of the lines named in this ticket has any power to alter, modify or waive in any manner any of the conditions named in this contract."

Attached to the ticket were various coupons, a portion of which entitled the plaintiff to be carried from Malvern to Hot Springs and back on the Hot Springs Railroad. The plaintiff was accordingly carried as a passenger from St. Louis to Hot Springs.

On May 9, 1883, the plaintiff, desiring to return to St. Louis, "presented himself and said ticket at the business and ticket office and depot of said Hot Springs Railroad, the said business and ticket office and depot being then and there the business office of the authorized agent of said Hot Springs Railroad at said Hot Springs, during business hours and a reasonable time before the time of departure of its train for St. Louis that the plaintiff desired to take and did take," and offered to identify himself as the

original purchaser of the ticket to the satisfaction of said agent for the purpose of entitling himself to return thereon to St. Louis, and of permitting the ticket to be officially signed, dated in ink and duly stamped by said agent; but the defendant and the Hot Springs Railroad Company failed to have said agent there at any time between the time when the plaintiff so [393] presented himself and his ticket and the time of departure of the train "whereby," the petition averred, "said defendant and its agent and the agent of said Hot Springs Railroad at Hot Springs, Ark., failed and refused, without any just cause or excuse, to identify the plaintiff as the original purchaser of said ticket, or to officially sign, date in ink, and stamp said ticket."

The plaintiff thereupon boarded the train of the Hot Springs Railroad at Hot Springs, and was carried thereby to Malvern, where, on the same day, he boarded a regular passenger train of the defendant for St. Louis, and, upon the conductor thereof demanding his fare, presented his ticket, informed him of his presentation of it at the office at Hot Springs, of his offer there to identify himself, and of the absence of the agent, as aforesaid, and offered to sign his name and otherwise identify himself to the conductor, and demanded to be carried to St. Louis by virtue of said ticket; but the conductor refused, and put him off the train, and left him at a way station, where he was obliged to remain without fire or other protection against the cold until he took the midnight train of the defendant for St. Louis, first paying fare; "by reason of each and all of which wrongful and unlawful acts aforesaid of defendant, its agents and employees, the plaintiff says he has been damaged in the sum of ten thousand dollars, for which he asks judgment."

The circuit court sustained a demurrer to this petition, and gave judgment for the defendant. Its opinion, delivered upon sustaining this demurrer, and sent up with the record, is reported in 23 Fed. Rep. 326; and its opinion at a former stage of the case, in 5 McCrary, 462, and in 17 Fed. Rep. 830.

Mr. Clinton Rowell, for plaintiff in error:

Under the terms of the ticket plaintiff was not guilty of any negligence in failing to get it stamped, and he was entitled to be transported on it.

Gregory v. *Burlington & M. R. R. R. Co.* 10 Neb. 250; *Murdock* v. *Boston & A. R. R. Co.* 137 Mass. 293; *Moore* v. *Fitchburg R. R. Corp.* 4 Gray, 465; *Maroney* v. *Old Colony & N. R. Co.* 106 Mass. 153; *Lake Shore & M. S. R. Co.* v. *Greenwood*, 79 Pa. 373; *Pennsylvania R. R. Co.* v. *Spicker*, 105 Pa. 142; *Young* v. *Pennsylvania R. R. Co.* 5 Cent. Rep. 848, 115 Pa. 112; *Hufford* v. *Grand Rapids & I. R. R. Co.* 7 West. Rep. 859; *Burnham* v. *Grand Trunk R. Co.* 63 Me. 298; *Tarbell* v. *Northern Cent. R. Co.* 24 Hun, 51; *Hamilton* v. *Third Ave. R. R. Co.* 53 N. Y. 25; *Hicks* v. *Hannibal & St. J. R. R. Co.* 68 Mo. 329; *Yorton* v. *Milwaukee, L. S. & W. R. Co.* 62 Wis. 367; *Palmer* v. *Charlotte, C. & A. R. Co.* 3 S. C. 580; *Illinois Cent. R. R. Co.* v. *Johnson*, 67 Ill. 312; *Chicago & A. R. R. Co.* v. *Flagg*, 43 Ill. 364; *Evans* v. *Memphis & C. R. R. Co.* 56 Ala. 246; *Lake Erie & W. R. Co.* v. *Fix*, 88 Ind. 381; *St. Louis & S. E. R. Co.* v. *Myrtle*, 51 Ind. 566; *Kansas Pac. R. Co.* v. *Kessler*, 18 Kan. 523; *Pennsylvania R. R. Co.* v. *Connell*, 112 Ill. 295.

It was the duty of the conductor of defendant to accept and act upon the statement of plaintiff in regard to his ticket, unless he had ascertained that his statement was untrue.

Hufford v. *Grand Rapids & I. R. R. Co.* 7 West. Rep. 859; *Burnham* v. *Grand Trunk R. Co.* 63 Me. 298; *Young* v. *Pennsylvania R. R. Co.* 5 Cent. Rep. 848, 115 Pa. 112.

Mr. John F. Dillon and **Winslow S. Pierce, Jr.**, for defendant in error:

As between the conductor and passenger and the rights of the latter to travel, the ticket produced must be conclusive evidence, and he must produce it when called upon, as the evidence of his right to the seat he claims.

Frederick v. *Marquette, H. & O. R. R. Co.* 37 Mich. 342; *Lake Shore & M. S. R. Co.* v. *Pierce*, 47 Mich. 277; *Swan* v. *Manchester & L. R. R. Co.* 132 Mass. 116; *S. C.* 6 Am. & Eng. R. R. Cas. 332; *Sherman* v. *Chicago & N. W. R. Co.* 40 Iowa, 45; *Dietrich* v. *Pennsylvania R. R. Co.* 71 Pa. 432.

Mr. Justice **Gray**, after stating the case, delivered the opinion of the court:

The right of this plaintiff to be carried upon the defendant's train, without paying additional fare, does not depend upon his having been re- [394] ceived as an ordinary passenger, or upon any representations made by a ticket seller, conductor or other officer of the Company as to his right to use a ticket, but wholly upon the construction and effect of the written contract, signed by him, upon the face of the ticket (of the kind called "tourist's" or "round-trip" tickets) sold him by the defendant for a passage to Hot Springs and back, by which, in consideration of a reduced rate of fare, he agreed to the following terms:

By the fifth condition, the ticket "is not good for return passage unless the holder identifies himself as the original purchaser to the satisfaction of the authorized agent of the Hot Springs Railroad, at Hot Springs, Ark., within eighty-five days from date of sale, and when officially signed and dated in ink and duly stamped by said agent this ticket shall then be good only five days from such date."

The clear meaning of this condition is that the ticket shall not be good for a return passage at all, unless, within eighty-five days from its original date, the holder not only identifies himself as the original purchaser to the satisfaction of the agent named, but that agent signs, dates and stamps the ticket; and that, upon such identification and stamping, the ticket shall be good for five days from the new date.

The sixth condition, by which the ticket is to be void if the plaintiff does not sign his name and otherwise identify himself, whenever called upon so to do by any conductor or agent of either of the lines over which he may pass, is evidently intended as an additional precaution against the transfer of the ticket either in going or in returning, and not as an alternative or substitute for the previous condition to the validity of the ticket for a return trip.

The twelfth condition states that the plaintiff understands and expressly agrees that no agent or employee of any of the lines has any power

to alter, modify or waive any of the conditions of the contract.

By the express contract between the parties, therefore, the plaintiff had no right to a return passage under the ticket, unless it bore the stamp of the agent at Hot Springs. Such a [395] stamp was made by the contract a condition precedent to the right to a return passage, and no agent or employee of the defendant was authorized to waive that condition.

The plaintiff contends that, as there was no agent at the office at Hot Springs to whose satisfaction he could identify himself, and by whom he could have his ticket stamped, when he presented himself with his ticket at that office, within a reasonable time before he took the return train, he had the right to be carried from Hot Springs to St. Louis under his ticket, without having it stamped, and may therefore maintain this action against the defendant for the act of its conductor in expelling him from the connecting train upon the defendant's road.

If this defendant had been the party responsible for not having an agent at Hot Springs, the question thus presented would have been of some difficulty, although we are not prepared to hold that, even under such circumstances, the plaintiff's remedy would not be limited to an action for the breach of the implied contract to have an agent here, and to the expense which he thereby incurred. But this case does not require the expression of any opinion upon that question.

By the first condition of the contract contained in the plaintiff's ticket, the defendant is not responsible beyond its own line. Consequently it was not responsible to the plaintiff for failing to have an agent at the further end of the Hot Springs Railroad. The agent who was to identify the passenger and stamp his ticket there was the agent of the Hot Springs Railroad Company, and is so described in the ticket, as well as in the petition. If there was any duty to have an agent at Hot Springs, it was the duty of that company, and not of the defendant. The demurrer admits only the facts alleged, and does not admit the conclusion of law, inserted in the petition, that by reason of the facts previously set forth, and which do not support the conclusion, the defendant and its agent failed and refused, without just cause or excuse, to identify the plaintiff as the original purchaser of the ticket, or to sign, date and stamp it. *Hitchcock* v. *Buchanan*, 105 U. S. 416 [26:1078].

The omission to have an agent at Hot [396] Springs not being a breach of contract or of duty on the part of this defendant, the case is relieved of all difficulty.

The conductor of the defendant's train, upon the plaintiff's presenting a ticket bearing no stamp of the agent at Hot Springs, had no authority to waive any condition of the contract, to dispense with the want of such stamp, to inquire into the previous circumstances, or to permit him to travel on the train. It would be inconsistent alike with the express terms of the contract of the parties, and with the proper performance of the duties of the conductor, in examining the tickets of other passengers, and in conducting his train with due regard to speed and safety, that he should undertake to determine, from oral statements of the passenger or other evidence, facts alleged to have taken place before the beginning of the return trip, and as to which the contract on the face of the ticket made the stamp of the agent of the Hot Springs Railroad Company at Hot Springs the only and conclusive proof.

The necessary conclusion is that the plaintiff cannot maintain this action against the defendant for the act of its conductor in putting him off the train. *Townsend* v. *N. Y. Cent. & H. R. R. Co.* 56 N. Y. 295; *Shelton* v. *Lake Shore & M. S. R. Co.* 29 Ohio St. 214; *Frederick* v. *Marquette, H. & O. R. R. Co.* 37 Mich. 342; *Bradshaw* v. *South Boston R. R. Co.* 135 Mass. 407; *Murdock* v. *Boston & A. R. R. Co.* 137 Mass. 293, 299; *Louisville, Nashville & G. S. R. R. Co.* v. *Fleming*, 14 Lea (Tenn.) 123.

Judgment affirmed.

ST. PAUL PLOW WORKS, *Plff. in Err.*, [376
v.
WILLIAM STARLING.

(See S. C. Reporter's ed. 376-378.)

Jurisdiction as to patent case.

An action upon a contract by which the plaintiff licensed the defendant to make and sell a patented article, in which action the validity and the infringement of the patent are controverted, is a "case touching patent rights," and therefore within the appellate jurisdiction of this court under section 699, Revised Statutes, without regard to the sum or value in dispute.

[No. 1367.]

Submitted May 4, 1888. Decided May 14, 1888.

IN ERROR to the Circuit Court of the United States for the District of Minnesota, to review a judgment for the plaintiff, in an action for breach of an agreement in writing, by which the plaintiff granted to defendant the right to make and sell within a defined territory a certain kind of plow, under letters patent granted to plaintiff, and defendant agreed to make and sell the plows and pay plaintiff a royalty thereon.

On motion to dismiss for want of jurisdiction. *Denied.*

See 29 Fed. Rep. 790; 32 Fed. Rep. 290.

The facts are stated in the opinion.

Messrs. **Chas. S. Careins** and **D. S. Frackelton,** for defendant in error, for the motion:

Defendant in error caused a transcript of record to be filed in this court and printed, for the purpose of making this motion to dismiss the writ, to prevent needless and oppressive delay. The court has held this proper practice.

Clark v. *Hancock*, 94 U. S. 493 (24:146); *Thomas* v. *Wooldridge*, 90 U. S. 23 Wall. 288 (23:185).

Section 700, Rev. Stat. U. S. is the only Act providing for the review here of a civil cause where an issue of fact has been tried in the circuit court otherwise than by a jury.

Boogher v. *New York L. Ins. Co.* 103 U. S. 90 (26:310); *Kearney* v. *Case*, 79 U. S. 12 Wall. 275 (20:395).

Unless the case at bar also comes under sec

tion 699, providing for appeals without regard to amount in controversy, there is no jurisdiction in this case.

Elgin v. *Marshall*, 106 U. S. 578 (27:249); *Zeigler* v. *Hopkins*, 117 U. S. 686 (29:1020).

An action on a contract to recover license fees, agreed to be paid for the use of a patent, is not a case touching patent rights, or arising under the patent or copyright laws of the United States.

Brown v. *Shannon*, 61 U. S. 20 How. 55 (15:826); *Albright* v. *Teas*, 106 U. S. 613 (27:295); *Wilson* v. *Sandford*, 51 U. S. 10 How. 99 (13:344); *Hartell* v. *Tilghman*, 99 U. S. 547 (25:357); *Sizer* v. *Many*, 57 U. S. 16 How. 98 (14:861); *Burr* v. *Gregory*, 2 Paine, 426; *Blanchard* v. *Sprague*, 1 Cliff. 288; *Hill* v. *Whitcomb*, 1 Holmes, 317; *Goodyear* v. *Union India Rubber Co.* 4 Blatchf. 63; *Merserole* v. *Union Paper Collar Co.* 6 Blatchf. 356; *Goodyear* v. *Day*, 1 Blatchf. 565; *Brooks* v. *Stolley*, 3 McLean, 523; *Pulte* v. *Derby*, 5 McLean, 328; Curt. Pat. § 496; Walk. Pat. § 388.

The writ of error cannot be sustained on the ground that the court went into the question of the validity of the patent.

Kinsman v. *Parkhurst*, 59 U. S. 18 How. 289 (15:385); *White* v. *Lee*, 14 Fed. Rep. 789; *Rogers* v. *Riessner*, 30 Fed. Rep. 525; *Bartlett* v. *Holbrook*, 1 Gray, 114; *Marston* v. *Swett*, 66 N. Y. 206; S. C. 82 N. Y. 526; *Burr* v. *Duryee*, 2 Fish. Pat. Cas. 285; *Baltimore Car Wheel Co.* v. *North Baltimore Passenger R. Co.* 21 Fed. Rep. 50; Walk. Pat. § 307.

Messrs. **John B. & W. H. Sanborn,** for plaintiff in error, in opposition:

The pleadings put in issue the validity of the patents and the novelty and utility of both. The court tried and decided all these issues. Under this state of facts, this case was one arising under the patent laws of the United States.

Brooks v. *Stolley*, 3 McLean, 523; *Littlefield* v. *Perry*, 88 U. S. 21 Wall. 205 (22:577); *Bloomer* v. *Gilpin*, 4 Fish. Pat. Cas. 54; *Magic Ruffle Co.* v. *Elm City Co.* 13 Blatchf. 157; *Woodworth* v. *Weed*, 1 Blatchf. 165; *Wilson* v. *Sherman*, Id. 538; *Woodworth* v. *Cook*, 2 Blatchf. 160; *Pulte* v. *Derby*, 5 McLean, 336; *Day* v. *Hartshorn*, 3 Fish. Pat. Cas. 32; *Goodyear* v. *Congress Rubber Co.* 3 Blatchf. 449; *Blanchard* v. *Sprague*, 1 Cliff. 288.

The plaintiff in error was not estopped to contest the validity of the patent.

Brown v. *Lapham*, 27 Fed. Rep. 77; *Burr* v. *Duryee*, 2 Fish. Pat. Cas. 275, 284; *Moody* v. *Taber*, 1 Ban. & Ard. Pat. Cas. 41-43; *Bostock* v. *Goodrich*, 25 Fed. Rep. 819; *Bell* v *McCullough*, 1 Fish. Pat. Cas. 380; *Wood* v. *Wells*, 6 Fish. Pat. Cas. 385.

Mr. Justice **Gray** delivered the opinion of the court:

The original action was brought in the Circuit Court of the United States for the District of Minnesota by a citizen of Nebraska against a corporation of Minnesota, for breach of an agreement in writing, dated December 17, 1877, by which the plaintiff granted to the defendant the right to make and sell within a defined territory a certain kind of plough, under letters patent granted August 18, 1874, to the plaintiff [377] for an improvement in ploughs (of which he alleged in his complaint that he was the first and original inventor), and the defendant agreed to make such ploughs in a good and workmanlike manner, and to advertise and sell them at a price not exceeding the price of similar implements sold by other manufacturers, and to render accounts semi-annually and pay the plaintiff a royalty of $2.50 for each plough sold.

The defendant, in its answer, admitted the agreement sued on, but denied any breach; denied that the plaintiff was the original and first inventor of any improvement in ploughs, and averred that his alleged improvement had been described in six earlier patents specified; admitted that the defendant had made and sold ploughs according to the method described in letters patent granted March 9, 1880, to one Berthiaume, and averred that those ploughs were constructed upon an entirely different principle from the plaintiff's. The plaintiff filed a general replication, denying the allegations of the answer.

A jury trial having been duly waived in writing, the case was tried by the court, which, upon facts set forth in detail, found that the defendant had made 960 ploughs under the Berthiaume patent, and 350 other ploughs; that all those ploughs infringed the plaintiff's patent, and that the plaintiff's invention was not anticipated by either of the six other patents set up in the answer; and concluded that the plaintiff was entitled to a royalty of $2.50 on each plough sold by the defendant, amounting to $3,275; overruled a motion for a new trial and gave judgment for the plaintiff accordingly. 29 Fed. Rep. 790; 32 Fed. Rep. 290.

The defendant sued out this writ of error, which the original plaintiff now moves to dismiss for want of jurisdiction, because the judgment below was for less than $5,000.

The decision of this motion depends upon § 699 of the Revised Statutes, by which a writ of error or appeal may be allowed from any final judgment or decree of the circuit court, without regard to the sum or value in dispute, "in any case touching patent rights." This section substantially re-enacts the corresponding provision of the Patent Act of 1870, in which [378] the words were "in any action, suit, controversy or case, at law or in equity, touching patent rights." Act July 8, 1870, chap. 230, § 56, 16 Stat. at L. 207. The language applied to this subject in the Patent Act of 1836, under which the cases of *Wilson* v. *Sandford*, 51 U. S. 10 How 99 [13:344] and *Brown* v. *Shannon*, 61 U. S. 20 How. 55 [15:826] were decided, was that used in that Act in defining the jurisdiction of the circuit court in patent cases, namely, "actions, suits, controversies and cases, arising under any law of the United States, granting or confirming to inventors the exclusive rights to their inventions or discoveries." Act July 4, 1836, chap. 357, § 17, 5 Stat. at L. 124. Similar words were used in the Patent Act of 1861 in defining the jurisdiction of this court. Act Feb. 18, 1861, chap. 37, 12 Stat. at L. 130. But in the Act of 1870, as in the Revised Statutes, Congress, while using similar language in defining the jurisdiction of the circuit court, substituted (it must be supposed, purposely) the new phrase, "touching patent rights," in defining the jurisdiction of this court.

The present case was an action upon a contract by which the plaintiff licensed the defendant to make and sell a patented article, and not a suit for infringing the plaintiff's patent. But the questions whether that patent was valid, and whether it had been infringed, were put in issue by the pleadings and decided by the circuit court. Whether, within the meaning of other statutes, and in the light of previous decisions, this case should be considered as "arising under" the patent laws of the United States, is a question not before us. See *Dale Tile Mfg. Co.* v. *Hyatt*, 125 U. S. 46 [31: 683] and cases there cited. It is sufficient for the decision of this motion, that we have no doubt that a case in which the validity and the infringement of a patent are controverted is a "case touching patent rights," and therefore within the appellate jurisdiction of this court, under § 699 of the Revised Statutes, without regard to the sum or value in dispute.

Motion to dismiss for want of jurisdiction denied.

---

[678] WILLIAM L. POWELL, *Plff. in Err.*,
v.
COMMONWEALTH OF PENNSYLVANIA.

(See S. C. Reporter's ed. 678-699.)

Police power of State—legislative power—statute, when conclusive—oleomargarine law—power of the judiciary—Pennsylvania statute.

1. A statute which is a legitimate exercise of the police power of the State, for the protection of the health of the people, and for the prevention of fraud, is not inconsistent with the Fourteenth Amendment of the Constitution of the United States. That Amendment was not designed to interfere with the exercise of the police power by the States.

2. Whether the manufacture of oleomargarine, or imitation butter, involves such danger to the public health as to require its entire suppression, rather than its regulation in such manner as to permit the manufacture and sale of articles of that class that do not contain noxious ingredients, is a question of fact and of public policy, which belongs to the legislative department to determine.

3. The legislative determination of such question is conclusive upon the courts, unless it appears upon the face of the statute, or from facts of which the courts must take judicial cognizance, that the statute infringes rights secured by the fundamental law.

4. Although legislation on this subject may be unwise, or unnecessarily oppressive to those manufacturing or selling wholesome oleomargarine as an article of food, yet the courts cannot interfere without usurping powers committed to another department of government; the appeal must be to the Legislature or to the ballot box, not to the judiciary.

5. The judiciary department is bound not to give effect to statutory enactments which are plainly forbidden by the Constitution; if the incompatibility of the Constitution and the statute is clear and palpable the courts must give effect to the former.

6. The Pennsylvania Statute of May 21, 1885, to prevent adulteration of dairy products, etc., is not repugnant to the clause of the Fourteenth Amendment forbidding the denial by the State to any person of the equal protection of the laws, nor as depriving any person of his property without just compensation, and is valid.

[No. 914.]

Argued Jan. 4, 1888. Decided April 9, 1888.

IN ERROR to the Supreme Court of the State of Pennsylvania, to review a judgment sustaining the validity of a Statute of Pennsylvania relating to the manufacture and sale of oleomargarine butter. *Affirmed.*

Reported below, 5 Cent. Rep. 890, 114 Pa. 265.

The facts are fully stated in the opinion.

Messrs. **Lyman D. Gilbert**, *W. B. Rodgers* and **D. T. Watson**, for plaintiff in error:

It is the law in Pennsylvania that the question whether or not any given act is within the police power of the State is one which the judiciary cannot determine, but it rests wholly with the Legislature.

Powell v. Commonwealth, 5 Cent. Rep. 890.

The trial court said that you could not introduce the proof of facts, and, upon the finding of a jury one way or another, have the constitutionality of the law decided. And yet, the supreme court had directly affirmed and sanctioned that very practice.

Seely v. *Pittsburgh*, 82 Pa. 360; *Washington Ave.* 69 Pa. 352; *Craig* v. *Philadelphia*, 89 Pa. 265.

Under the settled doctrine of this court, whether a state statute, called a police law, has a real or substantial relation to the public health, peace or morals is a judicial question.

Slaughter House Cases, 83 U. S. 16 Wall. 87 (21:412); *Munn* v. *Illinois*, 94 U. S. 145 (24:91); *Sinking Fund Cases*, 99 U. S. 718 (25:501); *Marbury* v. *Madison*, 5 U. S. 1 Cranch, 137, 167 (2:60, 70).

Whatever affects the peace, good order, morals and health of the community comes within the police power of the State.

People v. *Marx*, 99 N. Y. 377; *Re Jacobs*, 98 N. Y. 98.

What are the subjects of its exercise is clearly a judicial question.

Lakeview v. *Rose Hill Cemetery Co.* 70 Ill. 191; *Austin* v. *Murray*, 16 Pick. 121; Cooley, Const. Lim. 4th ed. 719; *Watertown* v. *Mayo*, 109 Mass. 315.

All laws passed by the Legislature are subject to review by the courts.

McCulloch v. *Maryland*, 17 U. S. 4 Wheat. 316, 421 (4:579, 605); *Hepburn* v. *Griswold*, 75 U. S. 8 Wall. 603 (19:513); *Legal Tender Cases*, 79 U. S. 12 Wall. 457 (20: 287); *Marbury* v. *Madison*, 5 U. S. 1 Cranch, 137 (2:60).

Oleomargarine butter is not injurious to the public health, morals or safety, and therefore its manufacture and sale cannot be prohibited under the guise of the police laws.

Boston Beer Co. v. *Massachusetts*, 97 U. S. 33 (24:992); *Northwestern Fertilizing Co.* v. *Hyde Park*, Id. 667 (24:1038); *Munn* v. *Illinois*, 94 U. S. 145 (24:91).

This court will assume this proof could have been made.

Scotland County v. *Hill*, 112 U. S. 186 (28:693).

The fact that oleomargarine butter is most extensively used, what its ingredients are and whether wholesome or not, would seem to be matters of which this court will inform itself.

Brown v. *Piper*, 91 U. S. 42 (23:201); *Re Jacobs*, 98 N. Y. 112.

Acts which can only be justified on the ground that they are police regulations must be clearly necessary to the safety, comfort or well being of society, or imperatively required by the public necessity.

2 Kent, Com. 13th ed. 340, note 2; *State* v. *Noyes*, 47 Me. 189; *People* v. *Jackson & M. Pl. Road Co.* 9 Mich. 307.

This Pennsylvania Act which prohibits the manufacture and sale of oleomargarine is not a valid exercise of the police power of the State.

The Fourteenth Amendment says that no State shall deny to any one the equal protection of the laws.

Ex parte Virginia, 100 U. S. 340 (25:677); *Strauder* v. *West Virginia*, Id. 303 (25:664); *Virginia* v. *Rives*, Id. 313 (25:667); *Neal* v. *Delaware*, 103 U. S. 370 (26:567), *Civil Rights Cases*, 109 U. S. 23 (27:843), *Yick Wo* v. *Hopkins*, 118 U. S. 356 (30:220), *Barbier* v. *Connolly*, 113 U. S. 27, 31 (28:923, 924), *Boyd* v. *U. S.* 116 U. S. 616 (29:746).

Such legislation is in conflict with the doctrine of equity, and is a denial of equal privileges to all.

Slaughter House Cases, 83 U. S. 16 Wall. 62 (21:164), *Charles River Bridge* v. *Warren Bridge*, 36 U. S. 11 Pet. 607 (9:847), *Case of Monopolies*, 11 Coke Rep. 84 b., Cooley, Prin. Com. Law, 295, *Butchers' Union S. H. & L. S. L. Co.* v. *Crescent City L. S. L. & S. H. Co.* 111 U. S. 746, 754, 761 (28:585, 588).

This Act deprives Powell of his avocation or calling in life. Is the manner of this deprivation "due process of law?"

Murray v. *Hoboken L. & I. Co.* 59 U. S. 18 How. 272 (15:372), *Davidson* v. *New Orleans*, 96 U. S. 102 (24:618), *Hagar* v. *Reclamation Dist.* 111 U. S. 707 (28:571), *Hurtado* v. *California*, 110 U. S. 531 (28:232); *Dartmouth College* v. *Woodward*, 17 U. S. 4 Wheat. 518 (4:629).

The Act deprives the plaintiff in error of his property without due process of law.

Barbier v. *Connolly*, 85 U. S. 18 Wall. 133 (21:850), *Boston Beer Co.* v. *Massachusetts*, 97 U. S. 25 (24:989), 2 Kent, Com. 320; *Wynehamer* v. *People*, 13 N. Y. 378, 433, *Slaughter* v. *People*, 24 N. Y. 384, 385, *Fisher* v. *Rose* v. *C. & M. R. R. Co.* 51 N. H. 511, 1 Bl. Com. 8; *People* v. *Gilson*, *Roy & M. Const. Co.* 80 U. S. 13 Wall. 166 (20:557), *People* v. *Orr*, 90 N. Y. 48, *State* v. *Livingston*, 77 Mo. 110, *People* v. *Marx*, 99 N. Y. 377.

Mr. [illegible] W. [illegible] and **Wayne MacVeagh**, for defendant in error.

What is meant by "due process of law?"

[illegible] 96 U. S. [illegible] (24:[illegible]); [illegible] v. [illegible] 125 U. S. [illegible] (31:[illegible]).

[illegible] 59 U. S. [illegible] How. [illegible] (15:[illegible]); [illegible] 27 U. S. [illegible] (7:[illegible]).

This Act did not deprive the plaintiff in error of his liberty without due process of law.

1 Sharswood's Blackstone, 127, note 8; Cooley, Const. Lim. 86–92; *Thorpe* v. *Rutland & B. R. R. Co.* 27 Vt. 140; Lieber's Civil Liberty, 161; *Braddee* v. *Brownfield*, 2 Watts & S. 285; *Calder* v. *Bull*, 3 U. S. 3 Dall. 388 (1:649).

The court cannot impute to the Legislature any other but public motives for their acts.

Sunbury & U. R. R. Co. v. *Cooper*, 33 Pa. 278; *People* v. *Draper*, 15 N. Y. 545; Cooley, Const. Lim. 187; *Soon Hing* v. *Crowley*, 113 U. S. 710 (28:1147); *License Cases*, 46 U. S. 5 How. 583 (12:291).

The Act did not deprive the plaintiff in error of his property without due process of law.

Boston Beer Co. v *Massachusetts*, 97 U. S. 25 (24:989); *Weil* v. *Calhoun*, 25 Fed. Rep. 865, 872; *Bartemeyer* v. *Iowa*, 85 U. S. 18 Wall. 129 (21:929); *State* v. *Smyth*, 14 R. I. 100; *Commonwealth* v. *Evans*, 132 Mass. 11; *State* v. *Newton*, 45 N. J. L. 469; *People* v. *Cipperly*, 1 Cent. Rep. 804, 101 N. Y. 634; reversing the Supreme Court of New York in 37 Hun, 319.

The Act did not deprive the plaintiff in error of the equal protection of the laws.

It is to be sustained as a valid exercise of the police power of the State.

Thorpe v. *Rutland & B. R. R. Co.* 27 Vt. 140; *Commonwealth* v. *Alger*, 7 Cush. 85; *Mayor of N. Y.* v. *Miln*, 36 U. S. 11 Pet. 102 (9:648); *License Cases*, 46 U. S. 5 How. 504 (12:256); *Munn* v. *Illinois*, 94 U. S. 125 (24:84).

There are so many laws whose constitutionality has been declared or conceded, which are analogous in character to the present law, that a reference to a few of them may be useful.

Specht v. *Commonwealth*, 8 Pa. 312; *Waldo* v. *Commonwealth*, 9 W. N. C. 200; *Board of Health* v. *Legal*, 1 Phila. Rep. 20; *Respublica* v. *Duquet*, 2 Yeates, 493; *Byers* v. *Commonwealth*, 42 Pa. 89; *Wright* v. *Commonwealth*, 77 Pa. 470, *Commonwealth* v. *Schenkhart*, 3 Phila. 20; *Commonwealth* v. *Wilson*, 9 W. N. C. 291; *Dobbs* v. *State*, 39 Ark. 353; *Mayor of N. Y.* v. *Williams*, 15 N. Y. 502, *Mitchell* v. *Williams*, 27 Ind. 62; *State* v. *Crosby*, Id. 12; *Tinsley* v. *State*, 16 Wis. 564, *Crowley* v. *People*, 14 Ill. 295; *Wynehamer* v. *Newman*, supra.

[illegible] **Harlan** delivered the opinion of [illegible]

[illegible] Supreme Court of Pennsylvania [illegible] a statute [illegible]

[illegible] Assembly of Pennsylvania [illegible] the [illegible]

[illegible] 127 U. S.

of butter or cheese, not the legitimate product of the dairy, and not made exclusively of milk or cream, but into which oil, lard, or fat, not produced from milk or cream, entered as a component part, or into which melted butter or any oil thereof had been introduced to take the place of cream. Laws Pa. 1878, p. 87; 1883, p. 43.

But this legislation, we presume, failed to accomplish the objects intended by the Legislature. For, by a subsequent Act, approved May 21, 1885, and which took effect July 1, 1885, entitled "An Act for the Protection of the Public Health and to Prevent Adulteration of Dairy Products and Fraud in the Sale Thereof," it was provided, among other things, as follows:

"Sec. 1. That no person, firm, or corporate body shall manufacture out of any oleaginous substance or any compound of the same, other than that produced from unadulterated milk, or of cream from the same, any article designed to take the place of butter or cheese produced from pure unadulterated milk or cream from the same, or of any imitation or adulterated butter or cheese, nor shall sell or offer for sale, or have in his, her or their possession, with intent to sell the same, as an article of food.

[680] "Sec. 2. Every sale of such article or substance, which is prohibited by the first section of this Act, made after this Act shall take effect is hereby declared to be unlawful and void, and no action shall be maintained in any of the courts in this State to recover upon any contract for the sale of any such article or substance.

"Sec. 3. Every person, company, firm, or corporate body who shall manufacture, sell, or offer or expose for sale or have in his, her or their possession with intent to sell, any substance, the manufacture and sale of which is prohibited by the first section of this Act, shall, for every such offense, forfeit and pay the sum of one hundred dollars, which shall be recoverable with costs by any person suing in the name of the Commonwealth as debts of like amounts are by law recoverable; one half of which sum, when so recovered, shall be paid to the proper county treasurer for the use of the county in which suit is brought and the other half to the person or persons at whose instance such a suit shall or may be commenced and prosecuted to recovery.

"Sec. 4. Every person who violates the provisions of the first section of this Act shall be deemed guilty of a misdemeanor, and upon conviction shall be punished by a fine of not less than one hundred dollars, nor more than three hundred, or by imprisonment in the county jail for not less than ten nor more than thirty days, or both such fine and imprisonment for the first offense, and imprisonment for one year for every subsequent offense."

The plaintiff in error was indicted, under the last statute, in the Court of Quarter Sessions of the Peace in Dauphin County, Pennsylvania. The charge in the first count of the indictment is that he unlawfully sold, "as an article of food, two cases, containing five pounds each, of an article designed to take the place of butter produced from pure, unadulterated milk or cream from milk, the said article so sold, as aforesaid, being an article manufactured out of certain oleaginous substances and compounds of the same other than that produced from unadulterated milk or cream from milk, and said article so sold, as aforesaid, being an imitation butter." In the second count the charge is that [681] he unlawfully had in his possession, "with intent to sell the same, as an article of food, a quantity, viz., one hundred pounds, of imitation butter, designed to take the place of butter produced from pure, unadulterated milk or cream from the same, manufactured out of certain oleaginous substances, or compounds of the same other than that produced from milk or cream from the same."

It was agreed, for the purposes of the trial, that the defendant, on July 10, 1885, in the City of Harrisburg, sold to the prosecuting witness, as an article of food, two original packages of the kind described in the first count; that such packages were sold and bought as butterine, and not as butter produced from pure, unadulterated milk or cream from unadulterated milk; and that each of said packages was, at the time of sale, marked with the words, "Oleomargarine Butter," upon the lid and side in a straight line, in roman letters half an inch long.

It was also agreed that the defendant had in his possession one hundred pounds of the same article, with intent to sell it as an article of food.

This was the case made by the Commonwealth.

The defendant then offered to prove by Prof. Hugo Blanck that he saw manufactured the article sold to the prosecuting witness; that it was made from pure animal fats; that the process of manufacture was clean and wholesome, the article containing the same elements as dairy butter, the only difference between them being that the manufactured article contained a smaller proportion of the fatty substance known as butterine; that this butterine existed in dairy butter in the proportion of from 8 to 7 per cent, and in the manufactured article in a smaller proportion, and was increased in the latter by the introduction of milk and cream; that this having been done, the article contained all the elements of butter produced from pure unadulterated milk or cream from the same except that the percentage of butterine was slightly smaller; that the only effect of butterine was to give flavor to the butter and that it had nothing to with its wholesomeness; that the oleaginous substances in the manufac- [682] tured article were substantially identical with those produced from milk or cream; and that the article sold to the prosecuting witness was a wholesome and nutritious article of food, in all respects as wholesome as butter produced from pure unadulterated milk or cream from unadulterated milk.

The defendant also offered to prove that he was engaged in the grocery and provision business in the City of Harrisburg, and that the article sold by him was part of a large and valuable quantity manufactured prior to the 21st of May, 1885, in accordance with the laws of this Commonwealth relating to the manufacture and sale of said article, and so sold by him; that for the purpose of prosecuting that business large investments were made by him in the purchase of suitable real estate, in the erec-

tion of proper buildings, and in the purchase of the necessary machinery and ingredients; that in his traffic in said article he made large profits; and, if prevented from continuing it, the value of his property employed therein would be entirely lost, and he be deprived of the means of livelihood.

To each offer the Commonwealth objected upon the ground that the evidence proposed to be introduced was immaterial and irrelevant.

The purpose of these offers of proof was avowed to be: (1) To show that the article sold was a new invention, not an adulteration of dairy products, nor injurious to the public health, but wholesome and nutritious as an article of food, and that its manufacture and sale were in conformity to the Acts of May 22, 1878, and May 24, 1883. (2) To show that the statute upon which the prosecution was founded was unconstitutional, as not a lawful exercise of police power, and also because it deprived the defendant of the lawful use "of his property, liberty, and faculties, and destroys his property without making compensation."

The court sustained the objection to each offer, and excluded the evidence. An exception to that ruling was duly taken by the defendant.

A verdict of guilty having been returned, and motions in arrest of judgment and for a [683] new trial having been overruled, the defendant was adjudged to pay a fine of $100 and costs of prosecution, or give bail to pay the same in ten days, and be in custody until the judgment was performed. That judgment was affirmed by the Supreme Court of the State. 114 Pa. 265.

This case, in its important aspects, is governed by the principles announced in *Mugler* v. *Kansas*, 123 U. S. 623 [31: 205].

It is immaterial to inquire whether the acts with which the defendant is charged were authorized by the Statute of May 22, 1878, or by that of May 24, 1883. The present prosecution is founded upon the Statute of May 21, 1885; and if that statute be not in conflict with the Constitution of the United States, the judgment of the Supreme Court of Pennsylvania must be affirmed.

It is contended that the last statute is void in that it deprives all coming within its provisions of rights of liberty and property without due process of law, and denies to them the equal protection of the laws; rights which are secured by the Fourteenth Amendment of the Constitution of the United States.

It is scarcely necessary to say that if this statute is a legitimate exercise of the police power of the State for the protection of the health of the people, and for the prevention of fraud, it is not inconsistent with that amendment; for it is the settled doctrine of this court that, as government is organized for the purpose, among others, of preserving the public health and the public morals, it cannot devest itself of the power to provide for those objects; and that the Fourteenth Amendment was not designed to interfere with the exercise of that power by the States. *Mugler* v. *Kansas*, 123 U. S. 663 [31: 211]; *Butchers' Union, S. H. & L. S. L. Co.* v. *Crescent City L. S. L. & S. H. Co.* 111 U. S. 746, 751 [28:585, 587]; *Barbier* v. *Connolly*, 113 U. S. 27 [28:923]; *Yick Wo.* v. *Hopkins*, 118 U. S. 356 [30:220].

The question, therefore, is whether the prohibition of the manufacture out of oleaginous substances, or out of any compound thereof other than that produced from unadulterated milk or cream from unadulterated milk, of an article designed to take the place of butter or cheese produced from pure unadulterated milk [684] or cream from unadulterated milk, or the prohibition upon the manufacture of any imitation or adulterated butter or cheese, or upon the selling or offering for sale, or having in possession with intent to sell, the same, as an article of food, is a lawful exercise by the State of the power to protect, by police regulations, the public health.

The main proposition advanced by the defendant is that his enjoyment upon terms of equality with all others in similar circumstances of the privilege of pursuing an ordinary calling or trade, and of acquiring, holding, and selling property, is an essential part of his rights of liberty and property, as guaranteed by the Fourteenth Amendment. The court assents to this general proposition as embodying a sound principle of constitutional law. But it cannot adjudge that the defendant's rights of liberty and property, as thus defined, have been infringed by the statute of Pennsylvania, without holding that, although it may have been enacted in good faith for the objects expressed in its title, namely, to protect the public health and to prevent the adulteration of dairy products and fraud in the sale thereof, it has, in fact, no real or substantial relation to those objects. *Mugler* v. *Kansas*, 123 U. S. 623, 661 [31: 205, 210]. The court is unable to affirm that this legislation has no real or substantial relation to such objects.

It will be observed that the offer in the court below was to show by proof that the particular articles the defendant sold, and those in his possession for sale, in violation of the statute, were, in fact, wholesome or nutritious articles of food. It is entirely consistent with that offer that many, indeed, that most kinds of oleomargarine butter in the market contain ingredients that are or may become injurious to health. The court cannot say, from anything of which it may take judicial cognizance, that such is not the fact. Under the circumstances disclosed in the record, and in obedience to settled rules of constitutional construction, it must be assumed that such is the fact. "Every possible presumption," *Chief Justice* Waite said, speaking for the court in *Sinking Fund Cases*, 99 U. S. 718 [25:501] "is in favor of the validity of a statute, and this continues until the contrary is shown beyond a rational doubt. One branch of the government cannot encroach [685] on the domain of another without danger. The safety of our institutions depends in no small degree on a strict observance of this salutary rule." See also *Fletcher* v. *Peck*, 10 U. S. 6 Cranch, 128 [3:175]; *Dartmouth College* v. *Woodward*, 17 U. S. 4 Wheat. 518, 625 [4:629, 656]; *Livingston County* v. *Darlington*, 101 U. S. 407 [25:1015].

Whether the manufacture of oleomargarine, or imitation butter, of the kind described in the statute, is, or may be, conducted in such a way, or with such skill and secrecy, as to baffle ordinary inspection, or whether it involves such danger to the public health as to require, for

the protection of the people, the entire suppression of the business, rather than its regulation in such manner as to permit the manufacture and sale of articles of that class that do not contain noxious ingredients, are questions of fact and of public policy which belong to the legislative department to determine. And as it does not appear upon the face of the statute, or from any facts of which the court must take judicial cognizance, that it infringes rights secured by the fundamental law, the legislative determination of those questions is conclusive upon the courts. It is not a part of their functions to conduct investigations of facts entering into questions of public policy merely, and to sustain or frustrate the legislative will, embodied in statutes, as they may happen to approve or disapprove its determination of such questions. The power which the Legislature has to promote the general welfare is very great, and the discretion which that department of the government has, in the employment of means to that end, is very large. While both its power and its discretion must be so exercised as not to impair the fundamental rights of life, liberty, and property, and while, according to the principles upon which our institutions rest, "the very idea that one man may be compelled to hold his life, or the means of living, or any material right essential to the enjoyment of life, at the mere will of another, seems to be intolerable in any country where freedom prevails, as being the essence of slavery itself," yet, "in many cases of mere administration, the responsibility is purely political, no appeal lying except to the ultimate tribunal of the public judgment, exercised either in the pressure of public opinion or by means of the suffrage." *Yick Wo* v. *Hopkins*, 118 U. S. 370 [30:226]. The case before us belongs to the latter class. The Legislature of Pennsylvania, upon the fullest investigation, as we must conclusively presume, and upon reasonable grounds, as must be assumed from the record, has determined that the prohibition of the sale, or offering for sale, or having in possession to sell, for purposes of food, of any article manufactured out of oleaginous substances or compounds other than those produced from unadulterated milk or cream from unadulterated milk, to take the place of butter produced from unadulterated milk or cream from unadulterated milk, will promote the public health, and prevent frauds in the sale of such articles. If all that can be said of this legislation is that it is unwise, or unnecessarily oppressive to those manufacturing or selling wholesome oleomargarine, as an article of food, their appeal must be to the Legislature, or to the ballot-box, not to the judiciary. The latter cannot interfere without usurping powers committed to another department of government.

[686]

It is argued, in behalf of the defendant, that if the statute in question is sustained as a valid exercise of legislative power, then nothing stands in the way of the destruction by the legislative department of the constitutional guarantees of liberty and property. But the possibility of the abuse of legislative power does not disprove its existence. That possibility exists even in reference to powers that are conceded to exist. Besides, the judiciary department is bound not to give effect to statutory enactments that are plainly forbidden by the Constitution. This duty, the court has said, is always one of extreme delicacy; for, apart from the necessity of avoiding conflicts between coordinate branches of the government, whether state or national, it is often difficult to determine whether such enactments are within the powers granted to or possessed by the Legislature. Nevertheless, if the incompatibility of the Constitution and the statute is clear or palpable, the courts must give effect to the former. And such would be the duty of the court if the State Legislature, under the pretense of guarding the public health, the public morals, or the public safety, should invade the rights of life, liberty, or property, or other rights, secured by the supreme law of the land.

[687]

The objection that the statute is repugnant to the clause of the Fourteenth Amendment forbidding the denial by the State to any person within its jurisdiction of the equal protection of the laws is untenable. The statute places under the same restrictions, and subjects to like penalties and burdens, all who manufacture, or sell, or offer for sale, or keep in possession to sell, the articles embraced by its prohibitions; thus recognizing and preserving the principal of equality among those engaged in the same business. *Barbier* v. *Connolly*, 113 U. S. 27 [28: 923]; *Soon Hing* v. *Crowley*, Id. 703 [28: 1145] *Missouri Pac. R. Co.* v. *Humes*, 115 U. S. 519 [29: 465];

It is also contended that the Act of May 21, 1885, is in conflict with the Fourteenth Amendment in that it deprives the defendant of his property without that compensation required by law. This contention is without merit, as was held in *Mugler* v. *Kansas*.

Upon the whole case, we are of opinion that there is no error in the judgment, and it is, therefore, *affirmed*.

Mr. Justice **Field**, dissenting:

The plaintiff in error was indicted in one of the courts of Pennsylvania for selling as an article of food two cases of oleomargarine butter, containing five pounds each, and was sentenced to pay a fine of $100. The case being taken to the Supreme Court of the State, the judgment was affirmed, and to review it the case is brought to this court.

The statute, under which the conviction was had, was passed on the 21st of May, 1885, and went into effect on the first of July following. It declares in its first section: "That no person, firm, or corporate body shall manufacture out of any oleaginous substance, or any compound of the same, other than that produced from unadulterated milk or cream from the same, any article designed to take the place of butter or cheese produced from pure, unadulterated milk, or cream from the same, or of any imitation or adulterated butter or cheese, nor shall sell or offer for sale, or have in his, her, or their possession with intent to sell the same as an article of food."

[688]

In another section the Act made a violation of these provisions a misdemeanor punishable by a fine of not less than $100, nor more than $300, or by imprisonment in the county jail for not less than ten or more than thirty days, or both such fine and imprisonment for the first offense, and imprisonment for one year for every subsequent offense.

The Act, it is to be observed, is not designed to prevent any deception in the manufacture and sale of the article of oleomargarine butter, or any attempt to pass it off as butter made of milk or cream. The title would indicate that the Act was intended for the protection of the public health, and to prevent the adulteration of dairy products, and fraud in the sale thereof. It is probable that the original draft of the Act had such a purpose, and that the title was allowed to remain after its body was changed. Be this as it may, the Act is one prohibiting the manufacture or sale, or keeping for sale, of the article, though no concealment is attempted as to its character, nature, or ingredients. Its validity is rested simply upon the fact that it has pleased the Legislature of the Commonwealth to declare that the article shall not be manufactured or sold or kept for sale within its limits. On the trial the defendant offered to prove by competent witnesses that the article manufactured was composed of ingredients perfectly healthy, and was as wholesome and nutritious as butter produced from pure milk or cream. But the court refused to allow the evidence, on the ground that it was immaterial and irrelevant. It was sufficient, in its judgment, that the Legislature had passed the Act, to render a disregard of its provisions a public offense.

The defendant also offered to prove that the article sold by him was a part of a large and valuable quantity manufactured prior to the passage of the Act of May 21, 1885, in accordance with the laws of the Commonwealth relating to the manufacture and sale of the article; but this offer was also rejected on the same ground, as immaterial and irrelevant. The case is therefore to be considered as if the proof offered had been received. *Scotland County* v. *Hill*, 112 U.S.183, 186 [28: 692, 693].

[689] Two questions are thus distinctly presented; first, whether a State can lawfully prohibit the manufacture of a healthy and nutritious article of food designed to take the place of butter, out of any oleaginous substance, or compound of the same, other than that produced from pure milk or cream, and its sale when manufactured; and, second, whether a State can, without compensation to the owner, prohibit the sale of an article of food, in itself healthy and nutritious, which has been manufactured in accordance with its laws.

These questions are not presented in the opinion of the court as nakedly and broadly as here stated, but they nevertheless truly indicate the precise points involved, and nothing else. Upon first impressions one would suppose that it would be a matter for congratulation on the part of the State, that in the progress of science a means had been discovered by which a new article of food could be produced, equally healthy and nutritious with, and less expensive than, one already existing, and for which it could be used as a substitute. Thanks and rewards would seem to be the natural return for such a discovery, and the increase of the article by the use of the means thereby encouraged. But not so thought the Legislature of the Commonwealth of Pennsylvania. By the enactment in question it declared that no article of food to take the place of butter shall be manufactured out of any other oleaginous matter than that which is produced from pure milk or cream, or be sold within its limits or kept for sale under penalty of fine and imprisonment.

If the first question presented can be answered, as it has been by the court, in the affirmative, I do not see why it is not equally within the competency of the Legislature to forbid the production and sale of any new article of food, though composed of harmless ingredients, and perfectly healthy and nutritious in its character; or even to forbid the manufacture and sale of articles of prepared food now in general use, such as extracts of beef and condensed milk, and the like, whenever it may see fit to do so, its will in the matter constituting the only reason for the enactment. The doctrine asserted is nothing less than the competency of the Legislature to prescribe out of different [690] articles of healthy and nutritious food, what shall be manufactured and sold within its limits, and what shall not be thus manufactured and sold. I have always supposed that the gift of life was accompanied with the right to seek and produce food, by which life can be preserved and enjoyed, in all ways not encroaching upon the equal rights of others. I have supposed that the right to take all measures for the support of life, which are innocent in themselves, is an element of that freedom which every American citizen claims as his birthright. I admit that previous to the adoption of the Fourteenth Amendment of the Federal Constitution, the validity of such legislation was to be determined by the Constitution of the State, and that its tribunals were the authoritative interpreters of its meaning. This court could exercise no appellate jurisdiction over the judgments of the state courts in matters of purely local concern. Their judgments in such cases were final and conclusive. If the legislation of the State thus sustained was oppressive and unjust, the remedy could be found only in subsequent legislation, brought about by the influence of wiser views and a more enlightened policy on the part of the people. From the structure of our dual government, in which the United States exercise only such powers as are expressly delegated to them by the Constitution, or necessarily implied, all others not prohibited to the States being reserved to them respectively, or to the people, the great mass of matters of local interest were necessarily subject to state regulation, and whether that was wisely or unwisely enacted, it was not a question which could come under the consideration of this court. The government created by the Constitution was not designed for the regulation of matters purely local in their character. The States required no aid from any external authority to manage their domestic affairs. It was only for matters which affected all the States or which could not be managed by them in their individual capacity, or managed only with great difficulty and embarrassment, that a general and common government was desired. Only such powers of internal regulation were, therefore, conferred as were essential to the successful and efficient working of the govern- [691] ment established, to facilitate intercourse and commerce between the people of different States, and to secure to them equality of protection in the several States; and only such restraints

were placed upon the action of the States as would prevent conflict with its authority, secure the fulfillment of contract obligations, and insure protection against punishment by legislative decree or by retrospective legislation. By the first section of the Fourteenth Amendment, which had its origin in the new conditions and necessities growing out of the late civil war, further restraints were placed upon the power of the States in some particulars, a disregard of which subjected their action to review by this court. That section is as follows:

"All persons born or naturalized in the United States, and subject to the jurisdiction thereof, are citizens of the United States and of the State wherein they reside. No State shall make or enforce any law which shall abridge the privileges or immunities of citizens of the United States; nor shall any State deprive any person of life, liberty, or property without due process of law; nor deny to any person within in its jurisdiction the equal protection of the laws."

It is the clause declaring that no State shall "deprive any person of life, liberty, or property without due process of law" which applies to the present case. This provision is found in the Constitutions of nearly all the States, and was designed to prevent the arbitrary deprivation of life and liberty, and the arbitrary spoliation of property. As I said on a former occasion, it means that neither can be taken, or the enjoyment thereof impaired, except in the course of the regular administration of the law in the established tribunals. It has always been supposed to secure to every person the essential conditions for the pursuit of happiness and is therefore not to be construed in a narrow or restricted sense. *Ex parte Virginia*, 100 U. S. 366 [25: 686].

By "liberty," as thus used, is meant something more than freedom from physical restraint or imprisonment. It means freedom not merely to go wherever one may choose, but to do such acts as he may judge best for his interests not inconsistent with the equal rights of [692] others; that is, to follow such pursuits as may be best adapted to his faculties, and which will give to him the highest enjoyment. As said by the Court of Appeals of New York, in *People* v. *Marx*, 99 N. Y. 386, "the term 'liberty,' as protected by the Constitution, is not cramped into mere freedom from physical restraint of the person of the citizen, as by incarceration, but is deemed to embrace the right of man to be free in the enjoyment of the faculties with which he has been endowed by his Creator, subject only to such restraints as are necessary for the common welfare;" and again, *In the matter of Jacobs:* "Liberty, in its broad sense, as understood in this country, means the right not only of freedom from actual servitude, imprisonment, or restraint, but the right of one to use his faculties, in all lawful ways, to live and work where he will, to earn his livelihood in any lawful calling, and to pursue any lawful trade or vocation." 98 N.Y. 98.

With the gift of life there necessarily goes to everyone the right to do all such acts, and follow all such pursuits, not inconsistent with the equal rights of others, as may support life and add to the happiness of its possessor. The right to pursue one's happiness is placed by the Declaration of Independence among the inalienable rights of man, with which all men are endowed, not by the grace of emperors or kings, or by force of legislative or constitutional enactments, but by their Creator; and to secure them, not to grant them, governments are instituted among men. The right to procure healthy and nutritious food, by which life may be preserved and enjoyed, and to manufacture it, is among these inalienable rights, which, in my judgment, no State can give and no State can take away except in punishment for crime. It is involved in the right to pursue one's happiness. This doctrine is happily expressed and illustrated in *People* v. *Marx*, cited above, where the precise question here was presented. That case arose upon an indictment for a violation of a provision of an Act of the Legislature of New York, entitled "An Act to Prevent Deception in the Sale of Dairy Products," a section of which was almost identical in language with the first section of the Act of the Legislature [693] of Pennsylvania under consideration. The defendant was convicted by the Court of General Sessions of New York. The conviction was affirmed by the general term of the supreme court, and from that decision an appeal was taken to the court of appeals, where the judgment was reversed. The court was of opinion that the object and effect of the Act, notwithstanding its title, was not to supplement existing provisions against fraud and deception by means of imitation of dairy butter, but to prohibit the manufacture and sale of any article which could be used as a substitute for it, however openly and fairly the character of the substitute might be avowed and published, to drive the substituted article from the market and protect those engaged in the manufacture of dairy products against the competition of cheaper substances capable of being applied to the same uses as articles of food. At the trial, and on the argument of the appeal, the ground was taken that, if such were the case, the manufacture or sale of any oleaginous compound, however pure and wholesome, as an article of food, if it was designed to take the place of dairy butter, was by that Act made a crime, and the court said: "The result of the argument is, that if, in the progress of science, a process is discovered of preparing beef tallow, lard, or any other oleaginous substance, and communicating to it a palatable flavor, so as to render it serviceable as a substitute for dairy butter, and equally nutritious and valuable, and the article can be produced at a comparatively small cost, which will place it within the reach of those who cannot afford to buy dairy butter, the ban of this statute is upon it. Whoever engages in the business of manufacturing or selling the prohibited product is guilty of a crime; the industry must be suppressed; those who could make a livelihood by it are deprived of that privilege; the capital invested in the business must be sacrificed, and such of the people of the State as cannot afford to buy dairy butter must eat their bread unbuttered." And after referring to the State Constitution, which provides that no member of the State shall be disfranchised, or be deprived of any of the rights and privileges secured to any citizen thereof, unless by the law of the land, or the judgment [694]

of his peers; and to the clause which declares that no person shall be deprived of life, liberty, or property without due process of law; and to the first section of the article of the Fourteenth Amendment of the Federal Constitution, the court said: "These constitutional safeguards have been so thoroughly discussed in recent cases that it would be superfluous to do more than refer to the conclusions which have been reached, bearing upon the question now under consideration. Among these, no proposition is now more firmly settled than that it is one of the fundamental rights and privileges of every American citizen to adopt and follow such lawful industrial pursuit, not injurious to the community, as he may see fit." And, referring to various decisions as to the meaning of liberty, among which was one that the right to liberty embraces the right of man "to exercise his faculties and to follow a lawful vocation for the support of life," the court said: "Who will have the temerity to say that these constitutional principles are not violated by an enactment which absolutely prohibits an important branch of industry for the sole reason that it competes with another, and may reduce the price of an article of food for the human race? Measures of this kind are dangerous even to their promoters. If the argument of the respondent in support of the absolute power of the Legislature to prohibit one branch of industry for the purpose of protecting another, with which it competes, can be sustained, why could not the oleomargarine manufacturers, should they obtain sufficient power to influence or control the legislative councils, prohibit the manufacture or sale of dairy products? Would arguments then be found wanting to demonstrate the invalidity under the Constitution of such an Act? The principle is the same in both cases. The numbers engaged upon each side of the controversy cannot influence the question here. Equal rights to all are what are intended to be secured by the establishment of constitutional limits to legislative power, and impartial tribunals to enforce them."

The answer made to all this reasoning, and this decision, is that the Act of Pennsylvania was passed in the exercise of its police power; meaning by that term its power to provide for the health of the people of the State. [695] Undoubtedly, this power of a State extends to all regulations affecting not only the health, but the good order, morals, and safety of society; but a law does not necessarily fall under the class of police regulations, because it is passed under the pretense of such regulation, as in this case by a false title, purporting to protect the health and prevent the adulteration of dairy products, and fraud in the sale thereof. It must have in its provisions some relation to the end to be accomplished. If that which is forbidden is not injurious to the health or morals of the people, if it does not disturb their peace or menace their safety, it derives no validity by calling it a police or health law. Whatever name it may receive, it is nothing less than an unwarranted interference with the rights and the liberties of the citizen. *In the matter of Jacobs*, the law passed was entitled "An Act to Improve the Public Health by Prohibiting the Manufacture of Cigars and Preparation of Tobacco in any Form in Tenement Houses in Certain Cases, and Regulating the Use of Tenement Houses in Certain Cases." It prohibited the manufacture of cigars or preparation of tobacco in any form on any floor or in any part of any floor in any tenement house, if such floor or part of such floor was occupied by any person as a home or residence for the purpose of living, sleeping, cooking, or doing any household work therein; and declared that every person who was guilty of a violation of the Act, or of having caused another person to commit such violation, should be deemed guilty of a misdemeanor, and punished by a fine of not less than $10 or more than $100, or by imprisonment of not less than ten days or more than six months, or by both such fine and imprisonment. The tenement house used had four floors and seven rooms on each floor, and each floor was occupied by one family, living independently of the others, and doing its cooking in one of the rooms thus occupied. Jacobs was engaged in one of his rooms in preparing tobacco and making cigars, but there was no smell of tobacco in any part of the house except in that room. For this violation of the Act he was arrested. A writ of *habeas corpus* sued out in the court below for his discharge was [696] dismissed at the special term of the supreme court. On appeal to the general term this order was reversed, and the case was taken to the court of appeals. There the claim was made that the Legislature passed this Act in the exercise of its police power; but the court said in answer: "Generally it is for the Legislature to determine what laws and regulations are needed to protect the public health and secure the public comfort and safety; and when its measures are calculated, intended, convenient, and appropriate to accomplish these ends, the exercise of its discretion is not subject to review by the courts; but they must have some relation to these ends. Under the mere guise of police regulations, personal rights and private property cannot be arbitrarily invaded, and the determination of the Legislature is not final and conclusive. If it passes an Act ostensibly for the public health and thereby destroys or takes away the property of a citizen, and interferes with his personal liberty, then it is for the courts to scrutinize the Act and see whether it really relates to and is convenient and appropriate to promote the public health. It matters not that the Legislature may, in the title to the Act, or in its body, declare that it is intended for the improvement of the public health. Such a declaration does not conclude the courts, and they must yet determine the fact declared and enforce the supreme law." And the court concluded an extended consideration of the subject by declaring that, when a health law is challenged in the courts as unconstitutional, on the ground that it arbitrarily interferes with personal liberty and private property without due process of law, the court must be able to see that it has in fact some relation to the public health, that the public health is the end aimed at, and that it is appropriate and adapted to that end; and as it could not see that the law in question forbidding the cigar maker from plying his trade in his own room in the tenement house, when allowed to follow it elsewhere, was designed to promote the public health, it pronounced the law unconstitutional and void.

If the courts could not in such cases examine into the real character of the Act, but must accept the declaration of the Legislature as conclusive, the most valued rights of the citizen [697] would be subject to the arbitrary control of a temporary majority of such bodies, instead of being protected by the guarantees of the Constitution. In the recent prohibition cases from Kansas this court, after stating that it belonged to the legislative department to determine primarily what measures are appropriate or needful for the protection of the public morals, the public health, or the public safety, added: "It does not at all follow that every statute enacted ostensibly for the promotion of these ends is to be accepted as a legitimate exercise of the police powers of the State. There are of necessity limits beyond which legislation cannot rightfully go. * * * The courts are not bound by mere form, nor are they to be misled by mere pretenses. They are at liberty—indeed, are under a solemn duty—to look at the substance of things, whenever they enter upon the inquiry whether the Legislature has transcended the limits of its authority. If, therefore, a statute purporting to have been enacted to protect the public health, the public morals, or the public safety has no real or substantial relation to those objects, or is a palpable invasion of rights secured by the fundamental law, it is the duty of the courts to so adjudge, and thereby give effect to the Constitution." *Mugler* v. *Kansas*, 123 U. S. 623, 661 [31: 205, 210].

In *Watertown* v. *Mayo*, 109 Mass. 315, 319, the Supreme Court of Massachusetts, speaking of the police power of the State, said: "The law will not allow rights of property to be invaded under the guise of a police regulation for the preservation of the health, or protection against a threatened nuisance, and when it appears that such is not the real object and purpose of the regulation the courts will interfere to protect the rights of citizens." It would seem that under the Constitutions of the States no Legislature should be permitted, under the pretense of a police regulation, to encroach upon any of the just rights of the citizen intended to be secured thereby. Be this as it may, certain it is that no State can, under any pretense or guise whatever, impair any such rights of the citizen which the fundamental law of the United States has declared shall neither be destroyed nor abridged. Were this not so, the protection which the Constitution designed [698] to secure would be lost, and the rights of the citizen would be subject to the control of the State Legislatures, which would in such matters be practically omnipotent. What greater invasion of the rights of the citizen can be conceived, than to prohibit him from producing an article of food, conceded to be healthy, and nutritious, out of designated substances, in themselves free from any deleterious ingredients? The prohibition extends to the manufacture of an article of food out of any oleaginous substances, or compounds of the same, not produced from milk or cream, to take the place of butter or cheese. There are many oleaginous substances in the vegetable as well as the animal world, besides milk and cream, but out of none of them shall any citizen of the United States within the limits of Pennsylvania be permitted to produce such an article of food for public consumption. Only out of pure milk or cream shall that article be made, notwithstanding the vast means for its production furnished by the vegetable as well as by the animal kingdom. The full force of the doctrine asserted will be apparent if the extent is considered to which it may be applied. The prohibition may be extended to the manufacture and sale of other articles of food, of articles of raiment and fuel, and even of objects of convenience. Indeed, there is no fabric or product, the texture or ingredients of which the Legislature may not prescribe by inhibiting the manufacture and sale of all similar articles not composed of the same materials.

The answer to the second question is equally conclusive against the decision of the court. In prohibiting the sale of the article which had been manufactured by the defendant pursuant to the laws of the State, the Legislature necessarily destroyed its mercantile value. If the article could not be used without injury to the health of the community, as would be the case perhaps if it had become diseased, its sale might not only be prohibited but the article itself might be destroyed. But that is not this case. Here the article was healthy and nutritious, in no respect injuriously affecting the health of any one. It was manufactured pursuant to the laws of the State. I do not, therefore, think the State could forbid its sale or [699] use; clearly not without compensation to the owner. Regulations of its sale and restraints against its improper use undoubtedly could be made, as they may be made with respect to all kinds of property; but the prohibition of its use and sale is nothing less than confiscation. As I said in *Bartemeyer* v. *Iowa*, 85 U. S. 18 Wall. 137 [21: 932], with reference to intoxicating liquors, so I say with reference to this property, I have no doubt of the power of the State to regulate its sale, when such regulation does not amount to the destruction of the right of property in it. "The right of property in an article involves the right to sell and dispose of such article as well as to use and enjoy it. Any Act which declares that the owner shall neither sell it nor dispose of it, nor use and enjoy it, confiscates it, depriving him of his property without due process of law. Against such arbitrary legislation by any State the Fourteenth Amendment affords protection. But the prohibition of sale in any way or for any use is quite a different thing from a regulation of the sale or use so as to protect the health and morals of the community." The fault which I find with the opinion of the court on this head is that it ignores the distinction between regulation and prohibition.

HAY WALKER, JR., ET AL., *Plffs. in Err.*, v. [699] COMMONWEALTH OF PENNSYLVANIA.

(See S. C. Reporter's ed. 699.)

The case of Powell v. Commonwealth of Pennsylvania, *ante*, followed, in holding the Pennsylvania Statute of May 21, 1885, relating to the manufacture and sale of oleomargarine butter to be a valid law.

[No. 1303.]

Submitted Jan. 4, 1888. Decided April 9, 1888.

IN ERROR to the Supreme Court of the State of Pennsylvania, to review a judgment sustaining the validity of the Pennsylvania Statute relating to oleomargarine butter. *Affirmed.*

Messrs. **Weiss & Gilbert, W. B. Rodgers** and **D. T. Watson,** for plaintiffs in error.

Messrs. **A. H. Wintersteen** and **Wayne Mac Veagh,** for defendant in error.

For points and authorities of counsel in this case, see next preceding case.

Mr. Justice **Harlan** delivered the opinion of the court:

The questions presented in this case do not differ, in any material respect, from those determined in *Powell* v. *Commonwealth of Pennsylvania,* just decided. The principles announced in that case necessarily require an affirmance of the judgment below. *It is so ordered.*

---

[579] TALMADGE E. BROWN, *Appt.,*
v.
DISTRICT OF COLUMBIA.

(See S. C. Reporter's ed. 579–589.)

Board of public works of District of Columbia—power of—ratification of contract—disallowance—judgment, when a bar.

1. The board of public works of the District of Columbia consisted of five members, who were the joint agents of the District in the management of its streets and alleys; and a contract with the board, to be binding upon the District, must have been ratified by a majority of the members of the board.

2. Where a corporate power resides in a select body, or has been delegated to a committee or agents, then, in the absence of special provision otherwise, a minority of the select body, or of the committee or agents, are powerless to bind the majority, or to do any valid act.

3. *Held,* under the circumstances of this case, that the alleged contract, sued on, for paving certain streets, has not been rendered valid by reason of any recognition of said contract, nor by the ratification thereof by Congress.

4. In the disposition of claims by the board of audit, a disallowance of them is the same as their rejection.

5. *Held* further, in this case, that the judgment of the Supreme Court of the District of Columbia, in a suit brought by William W. Ballard and others against the District (described in the opinion) is a bar to the first count of the petition.

[No. 224.]

Submitted April 13, 1888. Decided May 14, 1888.

APPEAL from a judgment of the Court of Claims, dismissing the petition of the appellant, who sued to recover damages for breach of an alleged contract, and for work performed and materials furnished in paving certain streets in the District of Columbia. *Affirmed.*

Reported below in 19 Ct. Cl. 445.

The facts are stated in the opinion.

Messrs. **C. C. Cole** and **Fillmore Beall,** for appellant:

The contract sued upon is a valid contract, binding upon the parties.

Moore v. *U. S.* 1 Ct. Cl. 90; *Adams* v. *U. S.* Id. 192; *Driscoll* v. *U. S.* 13 Ct. Cl. 15–37; *Garfielde* v. *U. S.* 11 Ct. Cl. 322, 592; *Cobb* v. *U. S.* 7 Ct. Cl. 473; *Neal* v. *U. S.* 14 Ct. Cl. 280; *Garfielde* v. *U. S.* 93 U. S. 243 (23:779); *Tayloe* v. *Merchants F. Ins. Co.* 50 U. S. 9 How. 390 (13:187); *Hamilton* v. *Lycoming Mut. Ins. Co.* 5 Pa. 339 and cases cited; *Mactier* v. *Frith,* 6 Wend. 103; *Pratt* v. *Hudson River R. R. Co.* 21 N. Y. 305; *Bronson* v. *Chappell,* 79 U. S. 12 Wall. 681 (20:436).

It became valid and binding by reason of the fact that it was afterwards recognized by the parties and was performed in part by the defendant.

Brown, Stat. Fr. §§ 447, 448 and notes; Fremont, Stat. Fr. §§ 461–476; Lind. Stat. Fr. §§ 359–365; Danolds, Stat. Fr. § 65; Gibbons Stat. of Frauds, §§ 416–423; *Neal* v. *U. S.* 14 Ct. Cl. 280.

It became valid by the ratification thereof by Congress.

Act June 20, 1874, 18 Stat. 116; Act June 11, 1878, 20 Stat. 102; Act June 16, 1880, 20 Stat. 286; Joint Res. Dec. 21, 1874, 18 Stat. 223; *Neitzey* v. *Dist. of Columbia,* 17 Ct. Cl. 111.

Messrs. **A. H. Garland,** *Atty-Gen.,* and **Robert A. Howard,** *Asst. Atty-Gen.,* for appellee.

Mr. Justice **Lamar** delivered the opinion of the court:

This is an appeal from a judgment of the Court of Claims dismissing the petition of the appellant, Talmadge E. Brown, who sued in that court to recover a judgment against the District of Columbia, appellee, for $200,000, in satisfaction of his claim for damages for breach of an alleged contract, and for work and labor performed and materials furnished in the paving of certain streets in the Cities of Washington and Georgetown.

The petition was filed November 16, 1880, and contains four counts, the first of which is in substance as follows: That from 1869 to [580] 1874, inclusive, petitioner, William W. Ballard, and Edward L. Marsh, all of whom were citizens of the United States, were in partnership under the name of the Ballard Pavement Company, their business consisting in grading, paving, etc., streets, sidewalks, etc.; that on or about December 10, 1872, said company made and completed a contract with the District of Columbia, whereby said company became bound to pave with wood pavement such streets, or parts of streets, in the Cities of Washington and Georgetown, in the said District of Columbia, as the board of public works of said District should designate from time to time, to the amount of 75,000 square yards, said work to be assigned and completed during 1873, and at the price of $3.50 per square yard, and also to do such grading, hauling, filling, and setting of curbing on the streets paved by said company, and at the board prices, as the said board of public works should order or direct; that by the terms of said contract the said work was to be paid for as the same progressed; that at the time the said board of public works of the said District of Columbia made and entered into said contract with said pavement company the said board had full power and authority to make the same in the manner and form the same was made; and that said contract was in the words and figures following, to wit:

"*The Ballard Pavement Company, Washington, D. C.:*

"Your proposition of this date, as follows:

"'The Ballard Pavement Company hereby make proposals for the following work, with accompanying conditions:

"'We will put down preserved wood pavement as follows: The Ballard block, the Perry block, or the wedge-shaped block, such as laid by Filbert & Taylor, in this city, as the contractors may elect, either to stand five inches high, for three dollars and fifty cents per square yard; and we hereby ask for seventy-five thousand square yards, contractors to have during the year 1873 within which to complete this work, the board not to stop the work without a gross violation of the contract on the part of the contractors, the streets to be designated by [581] the board at such times as the company shall be ready to commence work, said work to be paid for as the same progresses.

"'We also hereby apply for a separate and a further contract for so much of the grading, hauling, and filling as is not embraced in the contract for paving, and for setting the curbing on the streets, to be paved by us at board prices, subject to the conditions of the paving contract.'

"Is this day accepted.

"By order of the Board:

CHARLES S. JOHNSON,
"*Ass't Secretary.*"

The petition then alleges that in pursuance of said contract, and in part execution and performance thereof, said board of public works designated nine different pieces of work to be done by the company; all of which was done by it, to an aggregate amount of about 35,000 square yards, and that said company was prepared and ready to do all the rest of the 75,000 square yards specified in said contract, but that said board of public works failed and refused to designate any more work to be done by the company, whereby said company was damaged in the sum of $100,000; that said contract of December 10, 1872, was in effect ratified and confirmed, and the right of action thereon recognized and approved, by virtue of several Acts and resolutions of Congress, among which are the Act of June 20, 1874 [18 Stat at L. 116], Resolution of December 21, 1874 [18 Stat. at L. 223], Act of March 3, 1875, Joint Resolution of March 14, 1876 [19 Stat. at L. 211], Act of June 11, 1878 [20 Stat. at L. 102], and the Act of June 16, 1880 [21 Stat. at L. 284]; and that the claims herein made were never rejected by the board of audit. The petition then alleges that on the 20th day of June, 1874, said W. W. Ballard, and E. L. Marsh, for a full and valuable consideration, sold and assigned in writing all and singular their respective rights, interests, and claims in and to the cause of action herein set forth, whereby the plaintiff, Talmadge E. Brown, became the sole owner of said claim and cause of action, and is now the owner thereof, and has made no assignment or transfer of the same or any part thereof to any one, but still owns and holds the whole thereof in his own right.

[582] The matters set up in the second, third, and fourth counts of the petition (which are, as claimant states, "only different forms of statement for the same claim") have relation to the work done by the pavement company under the alleged contract of December 10, 1872, amounting in value to $129,569.85, for which they received certificates of the auditor of the board that they afterwards sold in the market for about 50 cents on the dollar, realizing therefrom only $69,784.92. The second count relates to the work actually done, and avers that only one half thereof has been paid for. The third count sets up the doing of the work, and the issuance of auditor's certificates therefor, under such circumstances as are claimed constituted the company an agent for the District to dispose of the certificates at their value, which was 50 cents on the dollar. And the fourth count sets up the doing of the work, the issuance and delivery to the pavement company of auditor's certificates, which are claimed to have been chattels and a commodity only, and which were worth 50 per cent of their face value. It is to recover from the District of Columbia the other half of the value of these auditor's certificates that the claimant brings this action on these three counts.

To this petition the District of Columbia interposed a general denial, and also a special plea to the first count thereof, which set up a former adjudication of the matters involved in said first count in the Supreme Court of the District of Columbia. Replication was filed, issue was joined, and the case having been heard before the Court of Claims, that court, upon the evidence, found in favor of the District of Columbia and rendered judgment dismissing the claimant's petition. The separate findings of fact of the court below are seventeen in number, and are too lengthy to be incorporated in this opinion. The material facts will be referred to as we proceed.

The decision of the Court of Claims was based upon three grounds: (1) That the contract sued on was not a contract made with the board of public works of the District of Columbia, and was not one in writing as contemplated in § 37 of the Act of February 21, 1871, 16 Stat. at L. 419, 427; (2) that the claim set up in the first count of the petition was *res adjudicata*, it having been once adjudicated by the [583] Supreme Court of the District of Columbia adversely to the Ballard Pavement Company, of which the plaintiff below is the successor; and (3) that under the Act of June 16, 1880, § 8, 21 Stat. at L. 284, 286, the Court of Claims was prohibited from taking jurisdiction of the claim set up in said first count, because that claim had been once rejected by the board of audit of the District of Columbia.

The decision of the court was clearly right, and the principles on which the learned judge based his conclusion are clear and undeniable.

The appellant contends that the alleged contract sued upon meets the requirements of § 37, of the Act of February 21, 1871, which provides that "all contracts made by the said board of public works shall be in writing, and shall be signed by the parties making the same, and a copy thereof shall be filed in the office of the secretary of the District;" and that the contract sued upon being a formal proposition in writing, and an acceptance thereof in writing, signed by the secretary of the board, whose authority to sign the same is not denied, and whose genuine signature thereto is admitted, was a valid contract binding upon the parties.

Numerous authorities are cited to show that the written acceptance by one party of a writ-

ten proposal made to him by another party creates a contract of the same force and effect as if formal articles of agreement had been written out and signed by said parties. The legal principle asserted is sound, but the fallacy of the argument lies in the assumption that the proposition of the pavement company was in fact submitted to the board, and that the latter did in fact authorize the letter to be written by Secretary Johnson accepting the said proposition. Are these assumptions borne out by the evidence adduced at the trial? Upon this point we quote from the 2d, 3d, 4th, 5th, and 6th findings of facts:

"In the early part of that month (December, 1872,) the said William W. Ballard and the claimant were in the City of Washington, and they had verbal negotiations with Alexander R. Shepherd, then and afterwards a member and vice-president of the board of public works of [584] the District of Columbia, which negotiations led them to write and send to that board a paper, a copy of which is given in the letter signed 'Charles S. Johnson, ass't secretary.' [This letter is quoted in the early part of this decision.] The said Charles S. Johnson was a clerk in the employment of the board of public works and was styled 'assistant secretary.'

"The journal of said board does not show that said proposition was ever before the board, nor does any acceptance thereof by the board appear otherwise than by the statement of said letter; nor does it appear that said Johnson was authorized by said board to write said letter, unless it should be inferred from his being a clerk of the board and styled assistant secretary; nor does it appear that the board or any member of it, except Alexander R. Shepherd, either saw or knew of said letter before or on the said 10th of December, 1872; nor can the original proposition, as drawn up by the claimant and said Ballard, be anywhere found among the papers or files of the board or of the District of Columbia, though searched for there; nor can any copy of said Johnson's letter be found in the books or files of the board or of the said District, though searched for there and though it was the practice of the court to keep press copies of the letters that went out of its office.

"In all the transactions hereinafter set forth, connected with the matter of paving streets by the said company, it does not appear that any member of the company was before the said board, at any meeting thereof, in relation to that work. Their intercourse in regard to it was almost wholly with said Alexander R. Shepherd. It took place sometimes at his store and sometimes at the office of the board. When it took place at his store, it does not appear that any other member of the board was present; when it took place at the office of the board, if other members of the board were present, and any member of the company spoke to them about the matter of that work, they would refer him to said Shepherd. When the company desired work to be designated for them to do they called on said Shepherd, supposing that whenever he said anything about the work in the District he represented the [585] board of public works—was the mouthpiece of the board. The said company, after receiving said Johnson's letter, proceeded to make preparations for laying down wooden pavement on streets in the District of Columbia, and made a contract for three million feet of lumber, estimated by them to be sufficient to make 75,000 square yards of pavement. In the spring of the year 1873 the company notified the board, through said Shepherd, that they were ready to proceed with the work of paving streets, and requested that such work should be designated for them to do, but none was designated until the latter part of June or beginning of July, when some parts of streets were designated and the company entered on the work of paving them. After doing so, and before they were allowed to receive any certificates of measurement showing work to have been done, they were required to enter into a written contract embracing the work, and to give bond for its performance. They at first declined to sign such a contract, claiming that the terms contained in it were different from those of their proposition of December 10, 1872, but they afterwards signed the following contracts."

The findings set out in full the contracts, and further show that the company entered into five of such contracts with the board of public works, the first bearing date July 5 and the last December 19, 1873; that all the work done by the company and every yard of pavement laid by it were done and laid under one of those several contracts; that every engineer's certificate of measurement gave on its face the number of one of those contracts as that under which the work named in the certificate had been done; that the company signed a receipt for every such certificate, and that upon those certificates the company received the auditor's certificates, which they voluntarily sold in the market for about 50 cents on the dollar.

In the face of these facts, found almost wholly from the evidence on the part of the claimant, we are of the opinion that we would not be justified in finding that the alleged contract of December 10, 1872—the one sued on here—was such as the statute prescribes, or that it was a valid contract in any respect.

By the 37th § of the Act approved February [586] 21, 1871, the board of public works is provided for, to consist of five persons, whose duties and powers it is said shall embrace the regulation and repair of the streets and highways of the District of Columbia. In *Barnes* v. *District of Columbia*, 91 U. S. 540 [23:440], this court held that, under that Act, the board of public works was not an independent body, acting for itself, but was a part of the municipal corporation of the District of Columbia, to which was given the exclusive control of the streets and alleys; that in those matters the board acts as the representative of the Corporation, or is "like an ordinary agent of the Corporation." We have seen from the findings in the trial below that the board had made no contract with the company on the 10th of December, 1872. It consisted of five members. Those members were the joint agents of the District of Columbia in the management of its streets and alleys, and a contract with the board to be binding upon the District must have been ratified by a majority of the members of the board.

The rule on this subject has been well stated by Dillon in his work on Municipal Corporations, § 283, as follows:

"As a *general rule*, it may be stated that not only where the corporate power resides in a *select body*, as a city council, but where it has been delegated to a *committee* or *agents*, then in the absence of special provisions otherwise, a *minority* of the select body, or of the committee or agents, are powerless to bind the majority or do any valid act. If all the members of the select body or committee, or if all of the agents are assembled, or if *all* have been duly notified, and the minority refuse or neglect to meet with the others, a majority of those present may act, provided those present constitute a majority of the whole number. In other words, in such a case, a major part of the whole is necessary to constitute a quorum, and a majority of the quorum may act. If the major part withdraw so as to leave no quorum, the power of the minority to act is, in general, considered to cease."

It is said, however, by appellant's counsel that if the alleged contract of December 10, [587] 1872, was not originally binding on the District of Columbia, it became valid and binding by reason of the fact that it was afterwards recognized by the parties, was performed in part by the District in designating the streets whereon the work should be done, by approving and accepting said work, and by the part performance of the contract on the part of the pavement company. In our apprehension no action of the board gives the slightest ground for this position. The refusal of the board to accept any of the work, or to allow any certificate of its amount to be given until after other contracts, entirely different in terms, were duly entered into, and bonds were given for their faithful performance, negatives any suggestion of recognition or ratification by the District of Columbia of the alleged contract of December 10, 1872, or of any acquiescence in its part performance. This claim is utterly inconsistent with the conduct of the company. The very fact that it entered into these other contracts, different in terms from the alleged contract of December 10, 1872, and accepted the certificates of the board issued for the work done under those contracts (and those alone), proves that it did not regard the verbal negotiations with Shepherd, and the unauthorized letter of Johnson thus disavowed by the board, as binding upon the District of Columbia.

The counsel for appellant further urge that notwithstanding all this, the alleged contract sued on has been rendered valid by reason of the recognition of such contracts and the ratification thereof by Congress, citing the several Acts of June 20, 1874, June 11, 1878, June 16, 1880, and the Joint Resolution of December 21, 1874.

We have not been referred to any particular section of any one of these acts that would work a confirmation or ratification of a transaction such as forms the basis of this suit. Nor does a close study of them disclose any such provision. On the contrary, by the Act of June 16, 1880, § 8, 21 Stat. at L. 284, 286, the Court of Claims is prohibited from taking jurisdiction of this claim as set up in the first count. That section provides that "No claim shall be presented to or considered by the Court of Claims under the provisions of this Act which was rejected by the board of audit."

Now, it is shown by the record in this case [588] that this identical claim (differing only in amount) was presented to the board of audit, and was disallowed by that board. The substance and the effect of the petition submitting such claim to the board of audit is substantially the same as that in the first count of the petition in this case. This is conclusively shown by the 15th finding:

"Upon the jacket wherein this petition and exhibit were inclosed this indorsement was made:

"'OFFICE BOARD OF AUDIT,
Washington, August 3, 1874.
"'CLASS 4, No. 239.

"'Claims against the board of public works for which no evidence of indebtedness has been issued.

"'Claims damages for breach of contract in the sum of $75,000.'

"And on the opposite side of said jacket was written:

"'The within claim against the board of public works has been examined and not allowed.'

"The board of audit kept a record of claims allowed and disallowed, in which appear the following:

"'RECORD OF CLAIMS, CLASS 4.

Date.	No. of claim.	Name.	Description of work.	Certificate No.	Claimed.	Allowed.	Disallowed.
1874. Aug.	3,239	Ballard Pavement Company.	Breach of contract.	....	75,000	....	75,000

"And the members of the board of audit reported said claim to Congress in a list of disallowed claims."

The interest of the claimant in this case is the same as that of the Ballard Pavement Company, which presented the claim to the board of audit. He is the successor of that company. True in that petition damages were claimed only to the extent of $75,000 for breach of the alleged contract of December 10, 1872, while here the claim for damages is laid at $100,000. That, however, is an immaterial matter. The cause of [589] action in each instance is the *breach of contract*, and the mere fact that in one instance the damages are laid at $75,000, while in the other at $100,000, does not change its identity.

The suggestion that the claim was not *rejected* by the board of audit within the meaning of section 8 of the Act of June 16, 1880, *supra*, but was only *disallowed*, may be dismissed with the remark that the two words when used with reference to the disposition of claims are synonymous.

We think, therefore, that there was no jurisdiction in the Court of Claims to entertain this branch of the case.

We also concur with the court in holding that the judgment of the Supreme Court of the District of Columbia, in a suit brought on the 6th of January, 1875, by William W. Ballard,

Edward L. Marsh, and the claimant, Talmadge E Brown, against the District of Columbia, to recover damages alleged to have been sustained by them under the said proposition and said Johnson's letter sued on in this case, is a bar to the first count of the petition. *Gould* v. *Evansville & C. R. R. Co.* 91 U. S. 526 [23:416].

In no view that has been presented or that seems capable of presentation, can the alleged contract be considered binding upon the District of Columbia.

The judgment of the Court of Claims is affirmed.

---

[597] GUSTAV FALK ET AL., *Plffs. in Err.*,
v.
GEORGE MOEBS.

(See S. C. Reporter's ed. 597-607.)

Promissory note, when that of corporation—liability of treasurer, as indorser—parol evidence to explain.

1. A promissory note, signed "Peninsular Cigar Co., Geo. Moebs, Sec. & Treas." payable to the order of "Geo. Moebs, Sec. & Treas." and indorsed "Geo. Moebs, Sec. & Treas." is a note of the corporation, and is payable to and indorsed by the corporation, and an action cannot be maintained against Geo. Moebs personally, as indorser.
2. There being no ambiguity in the indorsement, but it being *in form* that of the Peninsular Cigar Company, evidence to explain away or modify the terms of such indorsement is inadmissible.

[No. 243.]

Argued April 20, 1888. Decided May 14, 1888.

IN ERROR to the Circuit Court of the United States for the Eastern District of Michigan, to review a judgment in favor of defendant in an action upon promissory notes on which he was sought to be charged personally, as indorser. *Affirmed.*

The facts are fully stated in the opinion.

Messrs. **Carlos E. Warner** and *Levi T. Griffin*, for plaintiffs in error:

The indorsement imports an individual obligation of Moebs, the indorser.

Carpenter v. *Farnsworth*, 106 Mass. 561; *Slawson* v. *Loring*, 5 Allen, 340; 1 Dan. Neg. Inst. § 415; *Chadsey* v. *McCreery*, 27 Ill. 253; *Robinson* v. *Kanawha Valley Bank*, 7 West. Rep. 193, 44 Ohio St. 441; *Tucker Mfg. Co.* v. *Fairbanks*, 98 Mass. 101; *Moss* v. *Livingston*, 4 N. Y. 208: *Toledo Agricultural Works* v. *Heisser*, 51 Mo. 128.

Written evidence, showing the intention of the parties, was admissible.

Brown v. *Langley*, 4 Man. & G. 466; *Salmon* v. *Webb*, 3 H. L. Cas. 510; *Maillard* v. *Page*, L. R. 5 Exch. 312; *Davis* v. *Brown*, 94 U. S. 423 (24: 204); *Wade* v. *Wade*, 36 Tex. 529; *Haile* v. *Peirce*, 32 Md. 327; *Detroit* v. *Robinson*, 38 Mich. 108; *Singer Mfg. Co.* v. *Haines*, 36 Mich. 385; *Lee* v. *Dick*, 35 U. S. 10 Pet. 482, 493 (9: 503, 507).

Messrs. Don M. Dickinson and **Elliott G. Stevenson**, for defendant in error:

The notes sued upon do not establish a personal liability as against the defendant.

Garton v. *Union City Nat. Bank*, 34 Mich. 279; *Bank of Genesee* v. *Patchin Bank*, 19 N. Y. 312; *Vater* v. *Lewis*, 36 Ind. 288; *Babcock* v. *Beman*, 1 E. D. Smith, 593; *Arlington* v. *Hinds*, 1 D. Chip. (Vt.) 431; *Bank of Manchester* v. *Slason*, 13 Vt. 339; *Farmers & M. Bank* v. *Day*, Id. 36.

The capacity in which the party acted in signing his name to the instrument must appear alone upon the face of the instrument itself.

Evans v. *Wells*, 22 Wend. 325; *Pentz* v. *Stanton*, 10 Wend. 271; *Newhall* v. *Dunlap*, 14 Me. 180; *Kean* v. *Davis*, 21 N. J. L. 683; *Vermont Cent. R. R. Co.* v. *Clayes*, 21 Vt. 36; *White* v. *Miners Nat. Bank*, 102 U. S. 658 (26: 250); *Martin* v. *Cole*, 104 U. S. 30 (26: 647); *Metcalf* v. *Williams*, Id. 93 (26: 665); *Briggs* v. *Partridge*, 64 N. Y. 363; *Snelling* v. *Howard*, 51 N. Y. 377; *Stackpole* v. *Arnold*, 11 Mass. 27; *Eastern R. R. Co.* v. *Benedict*, 5 Gray, 566; *Williams* v. *Robbins*, 16 Gray, 77; *Daniels* v. *Burnham*, 2 La. 243; *Beckham* v. *Drake*, 9 Mees. & W. 79.

Mr. Justice **Lamar** delivered the opinion of the court:

The plaintiffs in error, Gustav Falk and Arnold Falk, who are citizens of the State of New York, brought suit in the Circuit Court of the United States for the Eastern District of Michigan against the defendant in error, George Moebs, upon nine certain promissory notes made by the Peninsular Cigar Company of Detroit, upon which they sought to charge Moebs personally as indorser. All of the notes were in form like the following, differing only as to amounts and the time of payment:

"$1,061.24. DETROIT, MICH., *Aug.* 4, 1880.

"Four (4) months after date we promise to pay to the order of Geo. Moebs, Sec. &. Treas., ten hundred sixty-one & $\frac{24}{100}$ dollars, at Merchants & Manufacturers' National Bank, value received.

"PENINSULAR CIGAR CO.,
"GEO. MOEBS, *Sec. & Treas.*

"Endorsed: 'Geo. Moebs, Sec. &. Treas.'"

The first count of plaintiffs' declaration was special, and alleged in substance that on July 6, 1880, defendant was the secretary and treasurer of a body corporate known as the Peninsular Cigar Company, then engaged in the business of manufacturing, buying and selling cigars and tobacco in the City of Detroit; that plaintiffs were then doing business as tobacco merchants in New York City; that the defendant, as secretary and treasurer of said Peninsular Cigar Company, applied to plaintiffs for the purchase of certain merchandise, and offered in payment therefor the notes of said Peninsular Cigar Company, and it was then agreed between the plaintiffs and defendant that plaintiffs were thereafter to sell and deliver the merchandise so applied for, and any other goods which defendant, in behalf of said company, might thereafter apply for, and that in payment therefor the defendant should execute and deliver to the plaintiffs the notes of the said Peninsular Cigar Company, payable to the order of the said defendant, and by him personally indorsed to said plaintiffs; that said defendant thereafter ordered from the plaintiffs certain merchandise of the value of $7,449, and, in accordance with said agreement and in payment for said merchandise, the defendant, upon the several dates indicated and speci- [598]

fied in the several promissory notes heretofore mentioned, and with the intent and design of binding, charging, and obligating himself as an indorser upon said notes with the liability of an indorser as defined by the law merchant, made, executed, and delivered to the plaintiffs said nine promissory notes.

To this special count were added the common counts in assumpsit, with a notice thereunder written that the plaintiffs would, under the money counts, give in evidence nine certain promissory notes, copies of which were set out, and in which notice it was stated that said notes would constitute the sole bill of particulars of the plaintiffs' demand.

To the special count in the declaration the defendant demurred, and to the common counts he pleaded the general issue. The demurrer to the special count was sustained, and the plaintiffs at the next term of said court brought the cause on for trial upon the issue framed upon the common counts in the declaration. Upon the trial, which was had before said court and a jury, the plaintiffs offered in evidence the notes referred to, and also the dep-
[599] osition of Arnold Falk, one of said plaintiffs, which it was claimed tended to show that it was the intention of the defendant to bind himself personally in making the said indorsement upon said notes; but this evidence was excluded on the ground that it was not evidence of the personal liability of the defendant. Upon the ruling of the court excluding this evidence error is alleged. Error is not assigned in regard to the judgment of the court sustaining the demurrer to the special count of plaintiffs' declaration in the original assignment of errors annexed to and accompanying the writ of error. It is, however, assigned for error in the brief filed in this court by plain-
[601] tiffs in error that such judgment is erroneous, and oral argument has been addressed to us on that point.

For the purposes of this decision we do not deem it necessary to review *seriatim* all the errors assigned. In our opinion the first question to be considered is: Does the indorsement on the notes involved in this case, *in terms*, purport to be that of the Peninsular Cigar Company, or does it purport to be the personal indorsement of Moebs? In other words, can it be clearly ascertained from these instruments themselves who is, in law, the indorser of them? Is the indorsement plain and clear, or is it ambiguous?

It is contended on behalf of the plaintiffs in error that the indorsement *in terms*, is that of Moebs personally; or, at most, that it is ambiguous and may be construed to be either that of the Peninsular Cigar Company, or the personal indorsement of Moebs. They, therefore, contend that the correspondence leading up to the making of these notes (and which is embraced in the deposition of Arnold Falk, before mentioned) should be considered and read with the notes and the indorsement upon them, not so much for the purpose of varying the terms of the contract embraced in the notes, as for the purpose of elucidating that contract, and for the purpose of showing who was in fact the indorser;—not for the purpose of showing what is the true construction of the language of the contracting party, but who *is* the contracting party. On the other hand, it is insisted with equal earnestness by the defendant in error, that the indorsement is unambiguous, and is in plain terms that of the Peninsular Cigar Company, and is not the personal indorsement of Moebs. He therefore contends that the evidence contained in the said deposition of Arnold Falk was rightfully rejected; and that to have admitted it as legal evidence would have been in effect to allow a contract in writing to be changed and modified, in an action at law, by extrinsic evidence, contrary to the rule of law which forbids such change or modification.

Upon this question it may be said that the authorities are not entirely harmonious. Indeed, there is much conflict among them. We do not find it essential, or even useful, to dis- [602]
cuss minutely every authority cited by the respective parties to this controversy, some of which are believed to have little relevancy to the subject under consideration. A discussion of a few of the leading ones which are believed to embody all the principles involved in this case, and to control it, will perhaps be sufficient.

Hitchcock v. *Buchanan*, 105 U. S. 416 [26: 1078] is a case much in point on this subject. Indeed, it was considered by the learned district judge below (who, nevertheless, disapproved of the ruling therein and dissented from the opinion of the court below) as practically controlling this case adversely to the plaintiffs in error. In that case a bill of exchange, as follows:

"$5,477.13. OFFICE OF BELLEVILLE NAIL MILL CO., Belleville, Ills., Dec. 15, 1875.

"Four months after date, pay to the order of John Stevens, Jr., cashier, fifty-four hundred and seventy-seven $\frac{13}{100}$ dollars, value received, and charge same to account of Belleville Nail Mill Co.

"WM. C. BUCHANAN, *Pres't.*
"JAMES C. WAUGH, *Sec'y.*

"To J. H. Pieper, Treas., Belleville, Illinois."

was held to be the bill of the company and not that of the individual signers; and it was also held that a declaration thereon against the latter as drawers, setting forth the instrument, and alleging it to be their bill of exchange, was bad on demurrer.

In *Carpenter* v. *Farnsworth*, 106 Mass. 561, a check drawn on the Boston National Bank, a copy of which is as follows:

"BOSTON NATIONAL BANK, Boston, September 9, 1879.

$19.20. "Pay to L. W. Chamberlain or J. E. Carpenter or order nineteen and twenty one-hundredths dollars.

ÆTNA MILLS

"I. D. FARNSWORTH, *Treasurer.*"

was held to be the check of the Ætna Mills, and therefore binding upon the corporation, and not the treasurer, Farnsworth, personally.

In *Sayre* v. *Nichols*, 7 Cal. 535, a draft, of [603]
which the following is a copy:

"$3,000. No. 2123.

"ADAMS & CO.'S EXPRESS AND BANKING HOUSE,
Mormon Island, Feb. 21, 1855.

"Pay to A. G. Sayre, or order, three thousand dollars, value received, and charge same to account of this office.

"C. P. NICHOLS,
"per G. W. COREY, *Agts.*

"To Messrs. Adams & Co., Sacramento.

"Endorsed: 'A. G. Sayre, G. W. C.'"

was held to be the draft of Adams & Co., and not the personal draft of the persons who signed it as agents in this case.

In *Garton* v. *Union City Nat. Bank*, 34 Mich. 279, it was said: "A promissory note made payable to C. T. Allen, cashier, or order, indicates that it was made to him not as an individual, but as a bank officer, and that it was a contract with the bank; and in a suit upon it by the bank no indorsement by such cashier is necessary to the admission of the note in evidence."

To the same effect see *Mott* v. *Hicks*, 1 Cow. 513, and cases there cited; *Bank of Genesee* v. *Patchin Bank*, 19 N. Y. 312, and authorities cited in Story on Agency, § 154.

In 1 Parsons on Notes and Bills, 92, it is said: "If the agent sign the note with his own name alone, and there is nothing on the face of the note to show that he was acting as agent, he will be personally liable on the note, and the principal will not be liable. And although it could be proved that the agency was disclosed to the payee when the note was made, and that it was the understanding of all parties that the principal, and not the agent, should be held, this will not generally be sufficient, either to discharge the agent or to render the principal liable *on the note*," citing *Stackpole* v. *Arnold*, 11 Mass. 27. That case was an action against the defendant as maker of three promissory notes. The notes were signed by another per-
[604] son in his own name, and there was nothing on the face of them to indicate any agency, or that the defendant had any connection with them. At the trial the person who signed the notes testified that they were given for premiums upon policies of insurance procured by him in the office kept by the plaintiff, at the request and for the use of the defendant, on property belonging to him, and that the witness acted merely as the factor of the defendant, and intended to bind him by the premium notes. The judge instructed the jury that "if they believed the notes to have been made and signed for and in behalf of the defendant, the verdict ought to be for the plaintiff." It was held that the evidence was improperly admitted, and the instruction was erroneous.

The converse of the rule laid down in the last two cases cited would seem to be identical with that contended for on behalf of the defendant in error.

On the other hand, authorities to sustain the view of the case contended for on behalf of the plaintiffs in error are not wanting, either in number or in pertinence.

In *Kean* v. *Davis*, 21 N. J. L. 683, a bill of exchange of the following purport, addressed to William Thomson, Esq., Somerville, New Jersey, and indorsed—"The Elizabethtown and Somerville Railroad Company, by John Kean, president:"

"$500.00. ELIZABETHTOWN, *Sept.*, 1841.

"Six months after date, please pay to the order of the Elizabethtown and Somerville Railroad Company, five hundred dollars, value received, and charge as ordered.

"Your obed't serv't, JOHN KEAN,
"*President Elizabethtown and Somerville R. R. Co.*"

was held to be ambiguous on its face, not clearly showing whether John Kean individually or the railroad company was the drawer, and proof was admitted, in the language of the court, "not to aid in the construction of the instrument, but to prove whose instrument it is." To the same effect see *Chadsey* v. *McCreery*, 27 Ill. 253; *Vater* v. *Lewis*, 36 Ind. 288; *Hood* v. *Hallenbeck*, 7 Hun, 362.

Mechanics Bank v. *Bank of Columbia*, 18 U. [605]
S. 5 Wheat. 326 [5:100], is also claimed to be an authority in favor of the position taken by the plaintiffs in error. This was an action of assumpsit brought by the Bank of Columbia against the Mechanics' Bank of Alexandria on the following check:

"No. 18. MECHANICS' BANK OF ALEXANDRIA, June 25, 1817.

"*Cashier of the Bank of Columbia*,

"Pay to the order of P. H. Minor, Esq., ten thousand dollars.

"$10,000. WM. PATON, Jr."

It was contended by the defendants that the check on its face was the individual check of Paton, and that evidence could not be received to show that it was in fact the check of the bank, and signed by Paton as cashier. On the other hand, the plaintiffs contended that the check upon its face did not purport to be the private check of Paton, but the check of the bank, drawn by him as cashier, and that the presumption was, that it was an official act. The court, however, decided that the check was ambiguous upon its face, that the marks indicating it to be the check of the bank predominated, and that the only ground upon which it could be contended that the check was the private check of Paton was that it had not below his name the initials for *cashier*. It was accordingly held that in such case testimony was admissible to explain the ambiguity and establish who was in fact the drawer of the check. The court say:

"But the fact that this appeared on its face to be a private check is by no means to be conceded. On the contrary, the appearance of the corporate name of the institution on the face of the paper at once leads to the belief that it is a corporate and not an individual transaction, to which must be added the circumstances that the cashier is the drawer and the teller the payee, and the form of ordinary checks deviated from by the substitution of *to order* for *to bearer*. The evidence, therefore, on the face of the bill, pre-
dominates in favor of its being a bank transac- [606]
tion. Applying, then, the plaintiff's own principle to the case, and the restriction as to the production of parol or extrinsic evidence

could have been only applicable to himself. But it is enough for the purposes of the defendant to establish that there existed, on the face of the paper, circumstances from which it might reasonably be inferred that it was either one or the other. In that case, it became indispensable to resort to extrinsic evidence to remove the doubt."

The reasoning of the court in this last case leads irresistibly to the conclusion that, had the check under consideration been signed by Paton with the word "cashier" appended, there would then have been no ambiguity in it, but it would have been clearly and unequivocally the check of the bank. And in this view the case seems to be not necessarily an authority in favor of the plaintiffs in error, but rather an authority against them, and in favor of the defendant in error.

In Daniel on Negotiable Instruments, § 415, it is said: "If a note be payable to an individual, with the mere suffix of his official character, such suffix will be regarded as mere *descriptio personæ*, and the individual is the payee," citing *Chadsey* v. *McCreery*, *Vater* v. *Lewis*, *supra*, and *Buffum* v. *Chadwick*, 8 Mass. 108. Continuing, he says, "In New York a different doctrine prevails," citing *Babcock* v. *Beman*, 11 N. Y. 200. But in § 416 the rule laid down would seem to be in favor of the contention of the defendant in error; for it is there said: "Where a note is payable to a corporation by its corporate name, and is then indorsed by an authorized agent or official, with the suffix of his ministerial position, it will be regarded that he acts for his principal, who is disclosed on the paper as the payee, and who, therefore, is the only person who can transfer the legal title," citing *Northampton Bank* v. *Pepoon*, 11 Mass. 288, and *Elwell* v. *Dodge*, 33 Barb. 336.

Many more authorities are cited and might be dwelt upon almost *ad infinitum*. A discussion of all of them would greatly protract this opinion, and would subserve no beneficial result. In all this vast conflict—we had almost [607] said *anarchy*—of the authorities bearing on the question under consideration, it is not easy to lay down any general rule on the subject which would be in harmony with all of them. It seems to us, however, that the case of *Hitchcock* v. *Buchanan*, *supra*, controls the case at bar. Both involve the same principles, and the decision in this, to be consistent with that of the former, must sustain the contention of the defendant in error. Neither do we think that the case of *Mechanics Bank* v. *Bank of Columbia*, *supra*, when considered in the light of the facts upon which it is based, in anywise conflicts with this conclusion.

We conclude therefore, that the notes involved in this controversy, upon their face, are the notes of the corporation. In the language of the court below, they were "drawn by, payable to, and indorsed by, the corporation." There is no ambiguity in the indorsement, but, on the contrary, such indorsement is, *in terms*, that of the Peninsular Cigar Company.

This being true, it follows that the court below was right in excluding from the jury the evidence offered to explain away and modify the terms of such indorsement. *White* v. *Miners Nat. Bank*, 102 U. S. 658 [26:250]; *Martin* v. *Cole*, 104 U. S. 30 [26:647]; *Metcalf* v. *Williams*, Id. 93 [26:635].

Entertaining these views, we find it unnecessary to consider any of the other questions presented and argued by counsel; as what we have said practically disposes of the case adversely to the plaintiffs in error.

The judgment of the court below is accordingly affirmed.

WILLIAM H. ROBERTSON, Late Collector of the PORT OF NEW YORK, *Plff. in Err.*, [607

v.

RICHARD F. DOWNING ET AL.

(See S. C. Reporter's ed. 607-614.)

Duty Act—construction—regulation—time of protest—Acting Secretary.

1. Charges for transportation of goods imported from one country, which on their passage may pass through another country, should not be added to the invoice value of the article to make their dutiable value, under section 2907, Revised Statutes, and section 14 of the Act of June 22, 1874.
2. A regulation of a department of the government is not to control the construction of an Act of Congress when its meaning is plain.
3. But when there has been a long acquiescence in such a regulation, and by it rights of parties for many years have been determined and adjusted, it is not to be disregarded without the most cogent and persuasive reasons.
4. The time to protest begins to run when the duties have been finally liquidated, and not from a previous liquidation which has been abandoned.
5. The acknowledgment of the Acting Secretary, who decided the appeal, is sufficient to show whether any appeal was taken, and also the affirmance of the decision of the Collector.

[No. 267.]

Argued April 27, 1888. Decided May 14, 1888.

IN ERROR to the Circuit Court of the United States for the Southern District of New York, to review a judgment in favor of plaintiffs, in an action to recover back an excess of duties exacted. *Affirmed.*

The facts are stated in the opinion.

Mr. **G. A. Jenks**, *Solicitor-Gen.*, for plaintiff in error.

(No counsel appeared for defendants in error.)

Mr. Justice **Field** delivered the opinion of [608] the court:

The plaintiffs below, the defendants in error here, in March, 1882, imported into the United States at the Port of New York 5,179 packages of steel rods from Mulheim, in Germany. They were shipped at the Port of Antwerp, in Belgium, to which place they were brought by rail from Mulheim, where they were made. Antwerp is distant from the frontier of Germany between forty and fifty miles, and from Mulheim two hundred miles. The appraisers added to the invoice price of the articles at Mulheim eleven marks per ton to make the dutiable value of the articles, and four marks per ton for the charges incurred in their transportation to Antwerp. Upon their appraised value, including these charges, the defendant, who was at the time Collector of the Port of New York, on the 5th of May, 1882, ascer-

tained and liquidated the duties. Subsequently, a reliquidation was made, by which two and [609] one-half per cent was deducted from the eleven marks. This reliquidation was completed on the 24th of May, 1882. Two days afterwards the plaintiffs made a formal protest against including in the dutiable value of the goods any sum for charges or otherwise in addition to the value stated in the invoice; but adding that they should pay the amount exacted, in order to get the goods, and then claim to have it refunded.

On the trial the plaintiffs put in evidence letters from the Acting Secretary of the Treasury, against the objection of the government, to show that an appeal was taken to the Secretary from the decision of the Collector, and that it was affirmed. The counsel of the government excepted to their admission. The following are the letters:

"TREASURY DEPARTMENT,
OFFICE OF THE SECRETARY,
Washington, D. C., August 14, 1882.

"*Collector of Customs, New York.*

"Sir: The department is in receipt of your letter of the 27th ultimo, submitting the appeal (1996,2050 H) of Messrs. Downing, Sheldon & Co., from your assessment of duty on additions made by the appraiser to the invoice and entered value of certain steel wire rods imported by them per Hermann, March 9, 1882.

"The appraiser reports that an addition was made by him for charges under the department's decision of July 20, 1880 (S. S. H 4617), for the reason that the invoice did not state that the price of the merchandise was 'free on board,' and that an addition for value was also made by him to make the usual market value of the merchandise.

"Your assessment of duty thereon is hereby affirmed.

"Very Respectfully, H. F. FRENCH,
Acting Secretary."

[610] "TREASURY DEPARTMENT,
OFFICE OF SECRETARY,
Washington, D. C., August 12, 1882.

"Messrs. DOWNING, SHELDON & CO. (care of Kausche & Downing, P. O. box 3550, N. Y.)

"Gentlemen: This department is in receipt of your appeal (No. 2050 H), dated May 25, 1882, from the decision of the Collector of the Port of New York, assessing duty on certain merchandise, imported per Hermann, March 9, 1882.

"In reply, you are informed that the case has been disposed of by instructions this day addressed to the Collector of customs at the port mentioned, to whom you are referred for particulars.

"Respectfully, H. F. FRENCH,
Acting Secretary."

The decision of the Secretary was made August 12, 1882. The plaintiffs paid the amount of duties exacted, and in October following brought the present action. The jury found in their favor for $130.96. The court, by consent of parties, reduced this sum to $47.64, and judgment for that amount, besides costs, was entered. This reduction was made, as we infer from the record, so as to cover only the increased duties exacted by reason of the addition for charges on transportation to Antwerp.

The question of importance presented is whether, under the statute, charges for transportation of goods imported from one country, which on their passage may pass through another country, should be added to the invoice value of the articles to make their dutiable value under section 2907 of the Revised Statutes, and section 14 of the Act of June 22, 1874. Section 2907 provides that "in determining the dutiable value of merchandise, there shall be added to the cost, or to the actual wholesale price or general market value at the time of exportation in the principal markets of the country from whence the same has been imported into the United States, the cost of transportation, shipment and transhipment, with all the expenses included, from the place of growth, pro- [611] duction, or manufacture, whether by land or water, to the vessel in which shipment is made to the United States; the value of the sack, box, or covering of any kind in which such merchandise is contained; commission at the usual rates, but in no case less than two and a half per centum; and brokerage, export duty and all other actual or usual charges for putting up, preparing and packing for transportation or shipment."

Section 14 of the Act of June 22, 1874, 18 Stat. at L. 189, provides "that wherever any statute requires that, to the cost or market value of any goods, wares, and merchandise imported into the United States, there shall be added to the invoice thereof, or, upon the entry of such goods, wares and merchandise, charges for inland transportation, commissions, port duties, expenses of shipment, export duties, cost of packages, boxes, or other articles containing such goods, wares, and merchandise, or any other incidental expenses attending the packing, shipping, or exportation thereof from the country or place where purchased or manufactured, the omission, without intent thereby to defraud the revenue, to add and state the same on such invoice or entry shall not be cause of a forfeiture of such goods, wares, and merchandise, or of the value thereof; but in all cases where the same, or any part thereof, are omitted, it shall be the duty of the collector or appraiser to add the same, for the purposes of duty, to such invoice or entry, either in items or in gross, at such price or amount as he shall deem just and reasonable (which price or amount shall, in the absence of protest, be conclusive), and to impose and add thereto the further sum of one hundred per centum of the price or amount so added; which addition shall constitute a part of the dutiable value of such goods, wares, and merchandise, and shall be collectible as provided by law in respect to duties on imports."

In the execution of these statutes the Treasury Department has heretofore uniformly construed them to apply, so far as inland transportation is concerned, only to such transportation where the place of the growth, production, or manufacture of the article is in the same country as the port from which the vessel sails on [612] which the shipment is made, and not where such transportation is through other countries to reach a place of shipment. Thus, in a decision rendered September 12, 1882, where goods were forwarded from Brodenbach, in Austria, to Hamburg, transhipped to Hull, and

then placed on the import vessel, the journey to the United States being continuous, the appellants claimed that no charges accruing after the goods left Austria should be added to make dutiable value, and the Treasury Department sustained the claim, observing as follows:

"This claim seems to be well founded, in view of the long established practice in such cases, and of articles 434–444 of the Regulations of 1874, which provide in substance that in the case of merchandise imported from an interior country through the ports of another country, or from the country of its production, manufacture, or procurement *via* another country, no charges shall be added for transportation accruing after the departure of the merchandise from the country of production, if the collector shall be satisfied that the merchandise was exported from such country with a *bona fide* intention of having it transported to the United States."

A decision by the department, made some years before, also illustrates the construction when the two places, that of production and that of shipment, though separated from each other by water, belong to the same country. The charges for railroad and steamboat transportation of goods from Dundee, in Scotland, to Liverpool, in England, were added to the invoice price to make the dutiable value of the articles imported into this country. The importers objected to these charges, and cited article 441 of the Regulations of 1874, referred to in the above decision, in support of their claim; but the Treasury Department held that the regulation was applicable only where the goods were transported to some port of another country from the country of production for shipment to the United States, by a practically continuous voyage, and was not applicable to shipments from Scotland through England, which are, to all intents and purposes, the same country.

[613] This construction of the Treasury Department we think a sound one. It places articles which are the growth, product, or manufacture of countries whose ports of easy shipment are found in other countries through which the goods must be carried, on a basis of equality with the products of those countries which have convenient ports of shipment. To preserve this equality the shippers are not obliged to confine their shipments to their own ports, when ports of other countries would be equally or more convenient to them. This construction of the department has been followed for many years, without any attempt of Congress to change it, and without any attempt, as far as we are advised, of any other department of the government to question its correctness, except in the present instance. The regulation of a department of the government is not of course to control the construction of an Act of Congress when its meaning is plain. But when there has been a long acquiescence in a regulation, and by it rights of parties for many years have been determined and adjusted, it is not to be disregarded without the most cogent and persuasive reasons. *U. S.* v. *Hill*, 120 U. S. 169, 182 [30: 627, 632]; *U. S.* v. *Philbrick*, Id. 52, 59 [30: 559, 561]; *Brown* v. *U. S.* 113 U. S. 568, 571 [28: 1079, 1080].

The technical objections taken by the government counsel we do not think tenable. The duties were not finally liquidated until the 24th of May, 1882. The time to protest did not begin to run until then. The previous liquidation on the 5th of May was necessarily abandoned by the corrections subsequently made. The letters of the Acting Secretary were sufficient evidence of the appeal from the decision of the Collector. The question was not as to the contents of the appeal, but whether any appeal was taken. The acknowledgment of the Acting Secretary, who decided the matter appealed, was sufficient for that purpose, and also of the affirmance of the decision of the Collector. The bill of exceptions also states when the decision of the Secretary was made. Of course that presupposes the receipt by him of the appeal. The date of "May 25th," in the letter of August 12, 1882, was evidently a misprint for "May 27th." But, if it were not so, the Treasury Department not having seen fit to place its decision upon the ground that the appeal was too early, we must assume that there was good reason for its action. [614

Judgment affirmed.

FANNIE B. ALLEN, *Appt.*, [589

v.

HENRY F. GILLETTE.

(See S. C. Reporter's ed. 589–596).

Trustee, purchase by—executors and administrators—judicial sale—devisee, mortgage by.

1. A trustee or person acting in a fiduciary character for the benefit of others cannot become a purchaser at his own sale, or acquire any interest therein without the express consent, or under a special permission given by a court of competent jurisdiction.

2. This rule applies to executors and administrators, who are not permitted to derive a personal benefit from the manner in which they transact the business or manage the assets of the estates intrusted to them; but whatever advantage is derived by them from a purchase at an undervalue is for the common benefit of the estate.

3. A trustee may purchase the trust property at a judicial sale brought about by a third party, which he has taken no part in procuring, and over which he could not have had control. This is the rule in Texas.

4. The disposition which a single creditor may make of his debt against the estate, or which a devisee may make of his interest therein, cannot interfere with the executor's control of the estate for the payment of debts, or for partition among devisees.

5. Where a devisee mortgaged her interest in the lands of the estate, a sale under the mortgage does not withdraw from the estate any lands subject to debts, or to partition among the devisees; and the executor occupies no relation of trust or confidence to the transaction.

[No. 277.]

Argued May 3, 1888. Decided May 14, 1888.

APPEAL from a decree of the Circuit Court of the United States for the Eastern District of Texas, dismissing a suit to redeem land from sale under a deed of trust. *Affirmed.*

The facts are stated by the court.

Messrs. **J. T. Brady** and *H. F. Ring*, for appellant:

The relationship between Mrs. Allen and Gillette was that of trustee and *cestui que trust.* 2 Pom. Eq. 482; *Ex parte Lacey*, 6 Ves. Jr. 627.

The trustee may not purchase the trust property for his own benefit when it is sold under a judicial decree.

Erskine v. *De La Baum*, 3 Tex. 417; *Howards* v. *Davis*, 6 Tex. 174; *Marsh* v. *Hubbard*, 50 Tex. 203; *Connolly* v. *Hammond*, 51 Tex. 635; *Michoud* v. *Girod*, 45 U. S. 4 How. 560 (11:1101); *Stephen* v. *Beall*, 89 U. S. 22 Wall. 339 (22:788); *Wormley* v. *Wormley*, 21 U. S. 8 Wheat. 441 (5:656).

A trustee buying a debt or incumbrance against the estate held by him in trust can only be allowed the amount actually paid therefor, with interest.

Lewin, Law of Trust, 289; *Darcy* v. *Hall*, 1 Vern. 49; *Van Epps* v. *Van Epps*, 9 Paige, 237; *Torrey* v. *Bank of Orleans*, 9 Paige, 649; *Dickinson* v. *Codwise*, 1 Sandf. Ch. 214; *Settembre* v. *Putnam*, 30 Cal. 490; *Hall* v. *Van Ness*, 49 Pa. 457; *Campbell* v. *Campbell*, 21 Mich. 438; *King* v. *Cushman*, 41 Ill. 31; *Harrold* v. *Lane*, 53 Pa. 269; *Heath* v. *Page*, 63 Pa. 108; *Holmes* v. *Campbell*, 10 Minn. 401.

Mr. T. N. Waul, for appellee:

This case is to be decided by the *lex loci rei sitæ*.

Hinde v. *Vattier*, 30 U. S. 5 Pet. 401 (8:170); *Van Ness* v. *Pacard*, 27 U. S. 2 Pet. 137 (7:374); *Wheaton* v. *Peters*, 33 U. S. 8 Pet. 591 (8:1055); *Kendall* v. *U. S.* 37 U. S. 12 Pet. 524 (9:1181); *Pennsylvania* v. *Wheeling & B. Bridge Co.* 54 U. S. 13 How. 518 (14:249); *Neves* v. *Scott*, Id. 272 (14:142); *U. S.* v. *Eckford*, 73 U. S. 6 Wall. 484 (18:920); *Brine* v. *Hartford F. Ins. Co.* 96 U. S. 627 (24:858); *Orvis* v. *Powell*, 98 U. S. 177 (25:238).

The acts of the husband were those of the wife's trustee, fixed by law with the control of the separate property.

2 Bish. Mar. Wom. § 399; *Mitchell* v. *Mitchell*, 35 Miss. 108; *Mobley* v. *Leophart*, 47 Ala. 259; *Bolling* v. *Mock*, 35 Ala. 727; *O'Brien* v. *Foreman*, 46 Cal. 80; *Cravens* v. *Booth*, 8 Tex. 248.

While the law extends its protection to the rights of a married woman, it does not permit her to act fraudulently or inequitably to the injury of others.

Chubb v. *Johnson*, 11 Tex. 469; *Allen* v. *Urquhart*, 19 Tex. 480; *Berry* v. *Donley*, 26 Tex. 737; *Baily* v. *Trammell*, 27 Tex. 328; *Fitzgerald* v. *Turner*, 43 Tex. 79; *Ryan* v. *Maxey*, Id. 192.

590] *Mr. Justice* **Lamar** delivered the opinion of the court:

This is a suit in equity in the Circuit Court of the United States for the Eastern District of Texas. The bill sets forth that complainant, Fannie B. Allen, a citizen of Kentucky, is the granddaughter of James Morgan, who died in 1866 seized and possessed of an estate of 70,000 acres of land, and a homestead in Galveston, with some personal property. The land was unproductive and scattered throughout the State. The deceased devised his property to seven grandchildren, of whom complainant was the oldest, and who in 1866 married at the age of seventeen years.

By the terms of the will, Henry F. Gillette, George Ball, both of Texas, and W. H. N. Smith, of North Carolina, were appointed executors. They were authorized, after probating said will and filing inventory and appraisement of the property, to administer the estate without any accountability to any judge or court. Gillette and Ball on being duly qualified entered upon the management of the estate.

On the 13th day of June, 1872, complainant and her husband, H. A. Allen, gave their note for $1,200, payable six months from date, with 12 per cent interest, to the Banking and Insurance Company of Galveston, to secure the payment of which note they also executed a deed of trust on all complainant's interest in the various tracts of land described in said deed belonging to the estate. Complainant and her husband being unable to pay said note when it became due, the deed of trust was foreclosed, her interest in said estate was sold thereunder, and the said defendant, Gillette, became the purchaser of said interest at the foreclosure sale.

The complainant alleges, at length, that, being poor and in needy circumstances, arising [591] from the failure and refusal of said defendant to settle up the said estate so as to let her have her portion thereof, or to render it available to relieve her pressing necessities, she was induced by the advice of said defendant to borrow said money from the bank and to execute the said note and deed of trust, which she would not have done but for defendant's promise to make her said interest in the estate available, so as to pay off said note, and thus prevent the sale under the deed of trust. She further alleges that, by withholding from her information as to the condition and value of the estate and making no reports to the court, the defendant obtained an undue advantage over her, and was thereby enabled to bid in her interest for much less than it was worth at the time of the sale. After alleging other circumstances of wrongful conduct and dereliction of duty, she states that, owing to enforced absence from Texas, to her poverty, and to the ignorance in which she was kept as to the real facts relative to her father's estate, it was not until a few months before this suit was commenced that she, by accident, discovered that she had any lawful claim to recover of said defendant her interest in the lands purchased by him.

The bill closes with the prayer that she be allowed to redeem said land from the said defendant, Gillette, by paying said purchase money, and that, in the event of her being unable to redeem it within such reasonable time as the court might direct, then that the land be resold for her benefit, paying the defendant the amount of his advances and interest; that the said defendant be required to answer, under oath, each and every allegation of the bill, and to make a full account of all his actings and doings as executor of Morgan's estate.

The defendant denies the allegation that the note and mortgage were executed by said complainant at his (defendant's) suggestion, by his advice, or with his approval, and alleges, in specific detail, that each and all the statements in the bill as to his (defendant's) conversations, actions or privity with said complainant and her husband, or said company, in any manner leading to or connected with said loan, note, and trust deed, are wholly untrue and unfounded; and avers that he was entirely igno- [592] rant of the borrowing of the said money and of the execution of said note and deed of trust,

and of any and all negotiations with reference thereto, or of any purpose of the kind on their part, until long afterwards, when he happened to see in a newspaper an advertisement of the sale to be made under the trust deed by complainant and her husband. The answer proceeds to give a full recital of the circumstances of defendant's purchase of said interest, declaring that having failed in his efforts to prevent said sale or to secure any better price to be paid, and that having ascertained that the property would be inevitably sold, he attended and purchased said interest, bidding the amount of said debts and expenses of the sale, and that said husband of complainant was present at the sale repeating his assurance, previously given, of satisfaction at the purchase of defendant in his own personal right and for his own benefit, and without trust or liability to complainant. Defendant further alleges that the price was entirely adequate to the value of the interest at that time, and denies the allegations of complainant to the contrary; alleges that said lands were appraised at twenty-five cents per acre; that the indebtedness of the estate exceeded $20,000; that if settlement had been forced it would not have yielded sufficient to pay the indebtedness; and that the policy of paying off the debts gradually, by inducing creditors to accept lands in settlement and selling in small parcels on time, thus saving all the lands they possibly could for division among the grandchildren of Morgan, was known to and approved by the relations and friends of the other six minor children. He denies all concealment of the condition and indebtedness of the estate from complainant and her husband, who was a young man of good business qualifications, fully able, so far as defendant knows and believes, to maintain his family in comfort by economy and industry; and in specific detail shows how he (the defendant) acted in good faith, with all reasonable diligence, in the discharge of his trust to the creditors and devisees of the estate.

The case was set for hearing upon bill and answer, and the exhibits to the bill and answer respectively. Upon the trial, the court held that the complainant was not entitled to the relief prayed for in her bill; that no fraud was [593] shown to have been committed, and that the defendant acted in the purchase with good faith; and rendered a decree against complainant, dismissing her bill with costs.

The complainant in this case prayed that the defendant be required to answer upon oath, fully and distinctly, each allegation of the bill. He did answer, and repelled every allegation of suggestion or knowledge on the subject of complainant's transactions with the bank, or of any approval of them after he was informed of them. His answer is corroborated by the circumstances and facts developed. There is not in those circumstances the slightest trace of fraud, false representation, or unfair dealing on his part in making the purchase, or of inadequacy of the price paid. It is, perhaps, worthy of remark, that counsel for complainant, both in oral argument and printed brief, was particular to call especial attention of the court to the fact that it is not alleged "that the defendant was guilty of fraud of any kind, either express, implied, or constructive;" nor is it claimed that the facts alleged in the bill show fraud of any kind on the part of the defendant. The theory of his case is, that, on account of the fiduciary relation of the defendant, the law conclusively presumes that he made the purchase for the benefit of the complainant as the *cestui que trust;* and that he thereby acquired only the right of holding the property as a trust mortgagee, and was entitled to realize what he had paid for it in the same manner as a mortgagee realizes from his investment. This is the whole extent of the claim; —not that the purchase shall be set aside and declared void for fraud of any kind, either express or implied, but that it should be upheld and made to operate as a resulting trust for the benefit of the complainant.

It must be conceded that, as a general rule of equity jurisprudence, a trustee or person acting in a fiduciary character for the benefit of others cannot become a purchaser at his own sale, or acquire any interest therein without the express consent, or under a special permission given by a court of competent jurisdiction. The cases cited by counsel for appellant abundantly support this doctrine. It applies to executors and administrators, who [594] are not permitted to derive a personal benefit from the manner in which they transact the business or manage the assets of the estates intrusted to them; but whatever advantage is derived by them from a purchase at an undervalue is for the common benefit of the estate.

In this case the precise nature of the trust, as well as the character and limits of the relations of the executor to the estate, are fixed with precision by the terms of the will, which is as follows:

"I do hereby constitute and declare the children of Son Kosinsko Morgan and his wife Caroline, to wit, Fannie, Belle, Charles W., P. May, Maria Orphelia, and Nellie Latham, and Ellen Lee, the daughter of my daughter Othelia Lee, my residuary legatees, and to them in equal shares I will, devise, and bequeath all my estate and property, both real and personal, wherever the same may be after all just debts against my estate and expenses accruing in the settlement thereof shall have been paid and discharged.

"I hereby constitute and appoint George Ball, of Galveston County, and H. F. Gillette, of Harris, both of the State of Texas, and Mr. Wm. H. N. Smith, of Murfreesborough, North Carolina, the executors of this my last will and testament (and to qualify without bond), with power, jointly or either two of them, to do all such acts and things, to sell any property necessary for the liquidation of debts, and to take all such steps and measures as may be necessary or expedient in the discharge or execution of the trust hereby reposed in them, and in payment and discharge of all the provisions and bequests herein contained, and in the administration of the estate and property devised and disposed of by virtue of this testament; and finally, it is my special desire that when this my last will and testament shall have been proven and recorded and an inventory and appraisement of my estate recorded in the probate court, neither such court nor any other shall have anything further to do with the administration of my estate; but my said executors,

George Ball, H. F. Gillette, and W. H. N. Smith, or any two of them who shall qualify and act, shall have full control of my estate under the will, without accountability to any judge or court further than before expressed by the will."

[595]

It is clear that, with the exception of the exemption of the executors from accountability to the court in the details of administration, the trust created by this will is the same that attaches by operation of law to any executor; to wit, a trust to pay the debts of the estate and then to deliver over the remainder of the lands for partition among the devisees or heirs.

The subject matter of the trust in this case is the whole estate in its entirety: (1) for the common benefit of all the creditors; and (2) for the common benefit of all the heirs or devisees. Respecting these creditors or devisees in their separate and individual capacity, he is not the representative or guardian of their person or property, and can exercise no legal control over either. The disposition which a single creditor may make of his debt against the estate, or the sale or other disposition which an individual devisee may make of his individual interest in said estate, cannot interfere with the executor's control of the estate for the payment of the debts of the creditors, on the one hand, or for its ultimate partition among the devisees, on the other; and both are, therefore, matters entirely outside of his trust and his office.

We have already taken it as true that fraud is out of the question in this case, and that the defendant had no agency in the borrowing of the money and incumbering her separate interest as above described by the complainant. She had, in conjunction with her husband, absolute authority to contract that debt, and to convey her interest in the lands of the estate in trust to the bank, with a power, in case of default of payment, to sell said property. Having this right free from any power of interference on the part of the executor, Gillette, it must follow that the debt was a legal one, the incumbrance a valid one, and the sale under it by the trustee in the deed equally valid and legal. Up to this point the defendant occupies no relation of trust or confidence to the transaction. With no legal power over any of the contracting parties, with no right to interfere with the trustee, to whom full power by the deed is lawfully given to sell the incumbered interest at public auction, he has no trusteeship in regard to it, no duty to perform in respect to it. The debt itself, incurred by complainant, constitutes no part of the liabilities of the estate which he, as executor, represents. The sale, when made, touched that estate nowhere, did not diminish its assets in the least, nor withdraw from it any lands subject to the debts of creditors, and to the ultimate partition of the devisees and their assigns.

[596]

There is nothing in the transaction, from its inception to its final consummation, that imposed upon the defendant any duty incompatible with his right as a purchaser at the sale.

The principle that a trustee may purchase the trust property at a judicial sale brought about by a third party, which he had taken no part in procuring, and over which he could not have had control, is upheld by numerous decisions of this court and of other courts of this country. *Prevost* v. *Gratz*, 1 Pet. C. C. 378; *Twin-Lick Oil Co.* v. *Marbury*, 91 U. S. 587 [23: 328]; *Chorpenning's Appeal*, 32 Pa. 315; *Fisk* v. *Sarber*, 6 Watts & S. 18.

It is true that the rule upon this subject as stated by some text writers is more stringent than that stated in these cases. 1 Perry, Tr. § 205; Hill, Tr. 250. We think, however, that the language employed by them does not present a thorough and perfect generalization of the essential principles pervading the decisions upon this subject. They are in manifest conflict with the uniform current of decisions of the Supreme Court of Texas, which are our guides in this case. *Erskine* v. *De Le Baum*, 3 Tex. 417; *Howards* v. *Davis*, 6 Tex. 174: *Scott* v. *Mann*, 33 Tex. 725; *Goodgame* v. *Rushing*, 35 Tex. 722.

From all of which we are of the opinion that *the decree of the court below was correct, and it is accordingly affirmed.*

Ex Parte:

In the Matter of SIMEON COY AND WILLIAM F. A. BERNHAMER, *Petitioners, Appts.* [731]

(See S. C. Reporter's ed. 731-764.)

Criminal offense under election laws—conspiracy to induce election officers to omit duty—authority of Congress—habeas corpus—*jurisdiction.*

*1. The Acts of Congress and the statutes of Indiana make it a criminal offense for an inspector of elections, or other election officer, at which an election for a member of Congress is held, to whom is committed the safekeeping and delivery to the board of canvassers of the poll books, the tally sheets, and the certificates of the votes, to fail or omit to perform this duty of safekeeping and delivery.

2. In an indictment in a court of the United States for a conspiracy to induce these officers to omit such duty, that the documents mentioned might come to the hands of improper persons who tampered with and falsified the returns, it is not necessary to allege or prove that it was the intention of these conspirators to affect the election of the member of Congress who was voted for at that place, the returns of which were in the same poll books, tally sheets, and certificates with those for state officers.

3. The authority of Congress to protect the poll books which contain the vote for a member of Congress, from the *danger* which might arise from the exposure of these papers to the chance of falsification or other tampering, is beyond question, and this danger is not removed because the purpose of the conspirators was to falsify the returns as to state officers found in the same poll books and certificates, and not those of the member of Congress.

4. The writ of *habeas corpus*, in case of a person held a prisoner by sentence of court, can only release the prisoner when it is shown that the court had no jurisdiction to try and punish him for the offense. The inquiry in such case is not whether there is in the indictment such specific allegation of the details of the charge as would make it good on demurrer, but whether the indictment describes a *class of offenses* of which the court has jurisdiction, and alleges the defendant to be guilty. If the record of the case in which judgment of imprisonment is pronounced contains no charge of such offense, he should be discharged.

5. The prisoners in the present case are specifically charged with an offense against the election laws of Indiana and of the United States, by a conspiracy to violate those laws; and this court holds that the District Court of the United States for

*Head notes by *Mr. Justice* MILLER.

Indiana had jurisdiction to try and punish them for that offense, and the judgment of the circuit court refusing the writ of *habeas corpus* is accordingly affirmed.

[No. 1395.]

Argued April 16, 17, 1888. Decided May 14, 1888.

APPEAL from a judgment of the Circuit Court of the United States for the District of Indiana, denying a writ of *habeas corpus* on the application of the petitioners, who were restrained of their liberty under the sentence and judgment of that court. *Affirmed.*

The facts are fully stated in the opinion.

See also opinion by Harlan, *J.*, 31 Fed. Rep. 794.

Messrs. **Cyrus F. McNutt,** *John G. McNutt, Finley A. McNutt* and **Daniel W. Voorhees,** for appellants:

Penal laws are to be construed strictly.

Ex parte Clarke and *Ex parte Siebold*, 100 U. S. 399 and 371 (25:715, 717); Lieber's Hermeneutics, 144; *Forrest* v *Forrest*, 10 Barb. 46; *Edrich's Case*, 5 Coke, 118; *Elam* v. *Rawson*, 21 Ga. 139; *U. S.* v. *Coy*, 32 Fed. Rep. 540.

Bishop on Statutory Crimes lays down rules governing the construction of criminal statutes.

Sec. 193, note 8, citing *U. S.* v. *Wiltberger*, 18 U. S. 5 Wheat. 76 (5:37); *State* v. *Stephenson*, 2 Bailey, L. 334, 335; *Commonwealth* v. *Loring*, 8 Pick. 370; *U. S.* v. *Wigglesworth*, 2 Story, 369.

The 5th canon of construction is laid down thus (see sec. 220): "In strict construction no case is to be brought within the statute unless completely within its words."

See also *People* v. *Peacock*, 98 Ill. 172; *U. S.* v. *Morrisey*, 32 Fed. Rep. 152; *Ex parte Perkins*, 29 Fed. Rep. 900.

The indictment must stand or fall, as it is found sufficient or insufficient in its averment of the conspiracy.

The Hoppet v. *U. S.* 11 U. S. 7 Cranch, 391 (3:381); *Boyd* v. *U. S.* 116 U. S. 634 (29:752); *U. S.* v. *Cruikshank*, 92 U. S. 542, 557-559, 562-564, 569 (23:588, 593, 595, 597).

In the prosecution of persons under strictly criminal statutes the rules of strict construction have been steadily adhered to by this court.

U. S. v. *Carll*, 105 U. S. 611 (26:1135); *U. S.* v. *Fox*, 95 U. S. 670, 672 (24:538, 539); *U. S.* v. *An Open Boat*, 5 Mason, 142; *U. S.* v. *Cruikshank, supra.*

Messrs. **Emory B. Sellers,** *Dist. Atty. of Indiana*, and **A. H. Garland,** *Atty-Gen.*, for the United States:

Congress may adopt state laws regulating elections, where representatives in Congress are chosen.

Ex parte Siebold, 100 U. S. 371 (25:717); *Ex parte Clarke*, Id. 399 (25:715); *U. S.* v. *Gale*, 109 U. S. 66 (27:857); *Ex parte Yarbrough*, 110 U. S. 651 (28:274).

That these state officers are amenable to state laws also is nothing to the purpose.

Moore v. *Illinois*, 55 U. S. 14 How. 20 (14:309); *Fox* v. *Ohio*, 46 U. S. 5 How. 432 (12:222); *U. S.* v. *Marigold*, 50 U. S. 9 How. 560 (13:257); *U. S.* v. *Arjona*, 120 U. S. 487 (30:731); *U. S.* v. *Jones*, 109 U. S. 519 (27:1017).

These election papers are in the nature of joint property of the State and the United States, and while the State can punish under her laws, so can the United States.

Bish. Stat. Cr. §§ 64, 67, 82, 118 a; *Scott* v. *State*, 22 Ark. 369; *U. S.* v. *Bader*, 16 Fed. Rep. 116; *U. S.* v. *Jackson*, 25 Fed. Rep. 548; *U. S.* v. *Baldridge*, 11 Fed. Rep. 552; *U. S.* v. *Fox*, 95 U. S. 670-673 (24:538-540).

Mr. Justice **Miller** delivered the opinion of the court: [732]

This is an appeal from the Circuit Court of the United States for the District of Indiana.

The case in that court arose upon an application for a writ of *habeas corpus* made on behalf of Simeon Coy and William F. A. Bernhamer, whose petition alleged that they were restrained of their liberty and detained in the custody of Edward Hawkins, the Marshal of the United States for the District of Indiana, and Isaac King, Sheriff of Marion County in that State, who claimed to hold the prisoners under the authority of a judgment of the United States District Court. The petition sets forth the nature of the proceedings by which they were indicted and tried in that court, wherein they were found guilty of the charges specified in the indictment. The sentence of the court was "that the said William F. A. Bernhamer make his fine to the United States in the sum of one thousand dollars, and that he be imprisoned in the state prison north (of said State) for the period of one year; and that the said Simeon Coy make his fine to the United States in the sum of one hundred dollars, and that he be imprisoned in the said state prison for the period of eighteen months." The prisoners were thereupon committed to the charge of the marshal, in whose custody they were at the time when this petition was filed.

The petitioners also presented a copy of the indictment, attached to their petition, which they say charges no offense against the United States, and that the federal district court and the grand jury thereof had no jurisdiction in [733] the premises. They allege that the action of said grand jury in returning the indictment, and of the court and the marshal thereof in taking them into custody and restraining them of their liberty under and by virtue of the judgment, order and commitment of said court, are wholly void, and the imprisonment of the petitioners unlawful.

To this petition, praying for a writ of *habeas corpus*, a demurrer was filed by the attorney of the United States for said district on behalf of the marshal and the sheriff. Upon the hearing of that demurrer it was sustained by the circuit court, which refused to issue the writ [734] as prayed in the petition. From this judgment the prisoners took an appeal to the supreme [735] court, which was allowed, and the same has been very fully argued in this court, both on their behalf and on the part of the government.

The record presented to us is very simple, [736] there being no other statement of the proceedings had upon the indictment than is contained [737] in that instrument itself, and the judgment of the court upon the trial. As the circuit court refused to grant the writ of *habeas corpus* there [738] is no return by the marshal and the sheriff, so that we have none of the facts or evidence in [739] the case except as they are detailed in the indictment. The only question raised by the petitioners, supported by several points in regard [740]

to the statutes applicable thereto, is that the district court which tried the indictment had [11] no jurisdiction. This proposition is founded, not upon any want of jurisdiction of the person, but upon the broad statement that the in- [12] dictment presents no crime or offense under the laws of the United States.

[13] The indictment itself is of considerable length, although consisting of but one count. It reads as follows:

"The grand jurors of the United States, within and for the District of Indiana, impaneled, sworn and charged in said court, at the term aforesaid, to inquire for the United States, within and for the District of Indiana aforesaid, upon their oath present that Simeon Coy, Henry Spaan, John H. Councilman, Charles N. Metcalf, John E. Sullivan, Albert T. Beck, George W. Budd, Stephen Mattler, William F. [14] A. Bernhamer, and John L. Reardon, late of said district, at the district aforesaid, on the third day of November, in the year of our Lord one thousand eight hundred and eighty-six, unlawfully, knowingly and feloniously did then and there conspire, confederate and combine and agree together, and with one Samuel E. Perkins, to commit an offense against the United States in this, to wit: The grand jurors aforesaid, impaneled and sworn as aforesaid, do charge and present that on the 2d day of November, in the year of our Lord one thousand eight hundred and eighty-six, an election for a representative in the Congress of the United States from the Seventh Congressional District of the State of Indiana, was lawfully had and held in and for said Seventh Congressional District of Indiana; that the County of Marion in said State, and the City of Indianapolis, situated in said county, are, and on said 2d day of November, in the year of our Lord one thousand eight hundred and eighty-six, were in and constituted parts of said congressional district, and that at said election for representative in Congress, so held in said district and in said county and city, a representative in Congress was lawfully voted for at each and every voting precinct of said district and of said county and city, including the precincts hereafter particularly named; that at said election one Allen Hisey served and was the lawful inspector of the election at and for the second precinct of the thirteenth ward of said City of Indianapolis, and at said election said John H. Councilman served and was the lawful inspector of election at and for the second precinct of the fourth ward of said City of Indianapolis, and that at said election said Stephen Mattler served as and was the lawful inspector of election at and for the third precinct of the thirteenth ward of said City of Indianapolis, and that at said election one Lorenz Schmidt served as and was the lawful inspector of election at and for the first precinct of the twenty-third ward of said City of Indianapolis, and one Joel A. Baker served as and was the lawful inspector of election at and for the sixth precinct of Center Township in said County of Marion, and one Joseph Becker served as and was the lawful inspector of election at and for the second precinct of the eleventh ward of the City of [15] Indianapolis aforesaid, and one Andrew Oehler served as and was the lawful inspector of election at and for the first precinct of the seventeenth ward of said City of Indianapolis, and one John Edwards served as and was the lawful inspector of election at and for the second precinct of the eighteenth ward of said City of Indianapolis.

"That at and after the close of the election aforesaid, and until delivery was made to the clerk of said county and to the board of canvassers of said county, each of said inspectors had in his lawful possession the ballots, tally papers, poll lists and certificate of the board of judges of election of and for the precinct of which he was and had been inspector as aforesaid; said ballots, poll lists, tally papers and certificates each contained evidence in respect to said election of representative in Congress, and said grand jurors aforesaid do charge and present that at said district, on said third day of November, in the year of our Lord one thousand eight hundred and eighty-six, said defendants Simeon Coy, Henry Spaan, John H. Councilman, Charles N. Metcalf, John E. Sullivan, Albert T. Beck, George W. Budd, Stephen Mattler, William F. A. Bernhamer, and John L. Reardon, intending to obtain unlawful possession of said papers and election returns so in the custody of said inspectors, and feloniously to mutilate, alter, forge and change the said poll lists, tally papers and certificates of the judges of election, did unlawfully and feloniously conspire, confederate, combine and agree together, and with said Samuel E. Perkins, unlawfully and by false and deceitful speeches, statements, assertions and promises, and by other unlawful means to the grand jurors unknown, to counsel, assist, aid, procure and induce said Allen Hisey, Lorenz Schmidt, John H. Councilman, Stephen Mattler, Joel H. Baker, Joseph Becker, Andrew Oehler, and John Edwards, inspectors as aforesaid, and each of them, unlawfully to omit, neglect, fail and refuse to perform the duties imposed by the laws of the State of Indiana upon them and each of them safely to guard, keep and preserve from harm and danger the papers, poll lists, tally papers and certificates of the judges of election so deposited with them, the said inspectors, and each of them re- [746] spectively, until lawfully delivered to the board of canvassers of said County of Marion, and to the clerk of said county, and that to effect the object of said conspiracy the said Samuel E. Perkins unlawfully advised, persuaded and procured the said Allen Hisey, inspector as aforesaid, unlawfully and negligently to deliver to him, the said Samuel E. Perkins, the poll lists, tally papers and certificates of the judges of election deposited with him, the said Allen Hisey, for return to the board of canvassers of said county, before the same had been returned to the said board of canvassers; and said Samuel E. Perkins and Simeon Coy unlawfully persuaded, advised and procured the said Stephen Mattler unlawfully and negligently to deliver, and he, the said Stephen Mattler, consented to and did then and there unlawfully and negligently deliver to said Perkins and Coy the poll lists, tally papers and certificate of the board of judges of election deposited with him, the said Stephen Mattler, for return to the board of canvassers of said county, before the same had been returned to and canvassed by said board of canvassers; and the said John E.

Sullivan and George W. Budd unlawfully received and took from Lorenz Schmidt the poll lists, tally paper and certificate of the board of judges of election deposited with said Lorenz Schmidt as aforesaid for return to the board of canvassers aforesaid; and the said John H. Councilman, negligently and in disregard of his duty, parted with and surrendered to a person or persons, to the grand jurors unknown, the poll list, tally paper and certificate of the judges of election deposited with him, the said John H. Councilman, for return to the board of canvassers; and the said Simeon Coy unlawfully received, procured and took from Andrew Oehler, inspector as aforesaid, the poll list, tally paper and certificate of the judges of election deposited with him, the said Andrew Oehler, as aforesaid, to be returned to the board of canvassers of said county; and the said defendants, Simeon Coy, Henry Spaan, John E. Sullivan, and others of the defendants, to the grand jurors unknown, advised, persuaded and procured the said Joel A. Baker unlawfully and negligently to surrender and deliver to [747] some person or persons, to the grand jurors unknown, the poll list, tally paper and certificate of the judges of election deposited with him for return to the said board of canvassers; and said defendants, Simeon Coy, Henry Spaan, John E. Sullivan, and other defendants, to the grand jurors unknown, advised, procured and persuaded said John Edwards, inspector as aforesaid, to unlawfully and negligently deliver and to surrender to some person or persons, to the grand jurors as aforesaid unknown, the poll list, tally paper and certificate of the judges of election deposited with him, the said John Edwards, as aforesaid, to be returned to the said board of canvassers; and said Simeon Coy, John H. Councilman, Henry Spaan, Charles N. Metcalf, John E. Sullivan, Albert T. Beck, George W. Budd, Stephen Mattler, William F. A. Bernhamer and John L. Reardon procured the election of said William F. A. Bernhamer as chairman of the board of canvassers of said election in and for said County of Marion, in said State and district, and said William F A. Bernhamer, as such chairman, refused to accept the poll list, tally paper and certificate of the judges of election deposited with said John H. Councilman as inspector as aforesaid, when first presented by said John H. Councilman to said board of canvassers, and until the said tally paper and certificate of the judges of election had been unlawfully altered and forged; and further to effect the object of said conspiracy, said Simeon Coy sent one William H. Eden to said Joseph Becker, inspector as aforesaid, and to other inspectors, to the grand jurors unknown, with direction, instruction and request to said Joseph Becker and other inspectors, respectively, not forthwith to return and deliver the returns of said election contained in sealed bags to the clerk of the Circuit Court of the County of Marion aforesaid, but to unlawfully bring the same to him, the said Simeon Coy; the said Simeon Coy, Samuel E. Perkins, Henry Spaan, Charles N. Metcalf, John E. Sullivan, George W. Budd, Albert T. Beck, John L. Reardon and said persons to the grand jurors unknown, to whom said tally papers, poll lists and certificates of judges of election were so unlawfully surrendered and delivered by said John H. Councilman, John Edwards, Allen Hisey, Lo- [748] renz Schmidt, Andrew Oehler, Stephen Mattler, Joseph Becker and Joel H. Baker, respectively, as aforesaid, not being then and there officers of said election, and not being then and there persons authorized by law to have the possession and custody of said poll lists, tally papers and certificates of the judges of election aforesaid, contrary to the form of the statutes of the United States in such case made and provided, and against the peace and dignity of the United States of America.

"EMORY B. SELLERS,

"*Attorney for the U. S. for the District of Indiana.*"

The essence of this indictment is that whereas, by the law of the State of Indiana it was the duty of these inspectors to take the certified lists of the voters, with the returns of the judges, and safely keep them until they delivered them to the county clerk or to the board of canvassers who were to examine and count the votes of all the precincts in the county, they were persuaded by the defendants, who influenced them in various ways, to deliver up the certificates, poll lists and tally papers to other persons who had no authority to take charge of them, and who thus had an opportunity of opening, examining, and falsifying those documents. It is the omission of this duty, which was imposed upon these inspectors by the law of Indiana, of safely keeping these papers confided to their care, that constitutes the foundation of this proceeding.

The provisions of the statutes of Indiana upon this subject may be found in the following sections of the Revised Statutes of that State:

"Sec. 4712. CERTIFICATE OF JUDGES. 34. When the votes shall be counted, the board of judges shall make out a certificate, under their hands, stating the number of votes each person has received, and designating the office; which number shall be written in words; and such certificate, together with one of the lists of voters and one of the tally papers, shall be deposited with the inspector, or with one of the judges selected by the board of judges.

"Sec. 4715. BOARD OF CANVASSERS. 37. The inspectors of each township or precinct, or [749] the judges of election to whom the certificates, poll books and tally papers shall have been delivered, as provided for in this Act, shall constitute a board of canvassers, who shall canvass and estimate the certificates, poll lists and tally papers returned by each member of said board; for which purpose they shall assemble at the court house on the Thursday next succeeding such election, between the hours of ten A. M. and six o'clock P. M."

The Acts of Congress which are supposed to make the conduct of persons interfering with these election returns a criminal offense are to be found in the following sections of the Revised Statutes of the United States:

"Sec. 5440. If two or more persons conspire either to commit any offense against the United States, or to defraud the United States in any manner or for any purpose, and one or more of such parties do any act to effect the object of the conspiracy, all the parties to such conspiracy shall be liable to a penalty of not less than one thousand dollars and not more than ten

thousand dollars, and to imprisonment not more than two years."

"Sec. 5511. If, at any election for representative or delegate in Congress, any person knowingly personates and votes, or attempts to vote, in the name of any other person, whether living or dead, or fictitious; or votes more than once at the same election for any candidate for the same office; or votes at a place where he may not be lawfully entitled to vote; or votes without having a lawful right to vote; or does any unlawful act to secure an opportunity to vote for himself, or any other person; or by force, threat, intimidation, bribery, reward, or offer thereof, unlawfully prevents any qualified [750] voter of any State, or of any Territory, from freely exercising the right of suffrage, or by any such means induces any voter to refuse to exercise such right, or compels or induces by any such means any officer of an election in any such State or Territory to receive a vote from a person not legally qualified or entitled to vote; or interferes in any manner with any officer of such election in the discharge of his duties; or by any such means or other unlawful means, induces any officer of an election or officer whose duty it is to ascertain, announce or declare the result of any such election, or give or make any certificate, document or evidence in relation thereto, to violate or refuse to comply with his duty or any law regulating the same; or knowingly receives the vote of any person not entitled to vote, or refuses to receive the vote of any person entitled to vote, or aids, counsels, procures or advises any such voter, person or officer to do any act hereby made a crime, or omit to do any duty the omission of which is hereby made a crime, or attempt to do so, he shall be punished by a fine of not more than five hundred dollars, or by imprisonment not more than three years, or by both, and shall pay the costs of the prosecution."

The charge in the indictment, which is supposed to be justified by this section, is that the defendants conspired to interfere with the officers of the election in the discharge of their duties; that they did by unlawful means induce them to violate and refuse to comply with their duty in regard to the custody and safekeeping of the election returns, and that they persuaded and induced these officers, or attempted so to do, to omit their duty in regard thereto.

Section 5512, although mainly relating to the registration of voters, makes it an offense for any "officer or other person who has any duty to perform in relation to such registration or election, in ascertaining, announcing or declaring the result thereof, or in giving or making any certificate, document or evidence in relation thereto, who knowingly neglects or refuses to perform any duty required by law, or violates any duty imposed by law, or does any act unauthorized by law relating to or affecting [751] such registration or election or the result thereof, or any certificate, document or evidence in relation thereto, or if any person aids, counsels, procures or advises, any such voter, person or officer to do any act hereby made a crime, or to omit any act the omission of which is hereby made a crime, every such person shall be punishable as prescribed in the preceding section."

Section 5515 makes it an offense for any officer of an election, at which any representative or delegate in Congress is voted for, "who withholds, conceals or destroys any certificate of record so required by law respecting the election of any such representative or delegate; or who neglects or refuses to make and return such certificate as required by law; or who aids, counsels, procures or advises, any voter, person, or officer to do any act by this or any of the preceding sections made a crime, or to omit to do any duty the omission of which is by this or any of such sections made a crime, or attempts to do so."

These statutes of the United States, first prescribing a punishment for a conspiracy to commit an offense against its laws, supplemented or preceded by federal laws made for the security and protection of the elections held for representatives and delegates to Congress, confer authority to punish a conspiracy to prevent or interfere with that security, by proceedings in the federal courts. The difficulty and delicacy of the position arises from the circumstance that Congress, instead of passing laws for the election of such members and delegates from the States and Territories under the supervision of its own officers and at times when no other elections are held, has remitted to the States the duty of providing for such elections. It follows that in all cases where a member of Congress is elected from a State, that he is voted for at an election held under the laws of the State, which provide for holding other elections at the same time and place, under the direction of the same officers, at which ballots are cast for a great number of state and local officers. The same judges, inspectors, and clerks preside and conduct the election for all these different offices. The votes for members of Congress are generally put into the same box with those cast for the various state and municipal officers. They are [752] generally printed upon ballots, composed of one piece of paper, containing a long list of names, including those of the candidate for representative in Congress, state, county and municipal officers.

While the Federal Government has not thought it advisable to provide for separate elections for Congressmen, nor to interfere with the general laws for the conduct of those elections passed by the States, it has enacted the sections above referred to, and among others those for the punishment of persons who violate the election laws at an election where votes are cast for a member of Congress. In doing this they have adopted the laws of the State, and they have provided that persons who violate them at such an election, that is, where a member is voted for, shall be punished by the provisions of the statutes of the United States and by proceedings in the federal courts.

This anomalous condition makes the question of the applicability of the laws of Congress on this subject to offenses under the state statutes for the regulation of the casting, returning, and counting of votes somewhat complex; but the power, under the Constitution of the United States, of Congress to make such provisions as are necessary to secure the fair and honest conduct of an election at which a member of Congress is elected, as well as the

preservation, proper return, and counting of the votes cast thereat, and, in fact, whatever is necessary to an honest and fair certification of such election, cannot be questioned. The right of Congress to do this, by adopting the statutes of the States, and enforcing them by its own sanctions, is conceded by counsel to be established. In regard to this they say in their brief:

"It is, perhaps, since the decision in *Ex parte Clarke*, 100 U. S. 399 [25: 715] past debate that Congress has the power under the Constitution to adopt the laws of the several States, respecting the mode of electing members of Congress, and, as resulting from that power, the right to prescribe punishment for infractions of the laws so adopted. This court has held more than once that Congress has exercised this power, and has adopted these laws, and, with them, the officers created under [753] them, making them for the purposes of the election of representatives in Congress its officers, and has added new sanctions to such laws, and subjected such officers to the penalties of these sanctions. All this is conceded."

The main objection to the indictment, however, which is urged with great earnestness by counsel for appellants, is that it contains no averment that the intent and purpose of the defendants' conduct was to affect in any manner the election of a member of Congress, or to influence the returns relating to that office. The proposition is put in various forms, that since there were many state and local officers also voted for at the election in question and in those precincts, and as it is consistent with the indictment that the actions of the conspirators were directed only to the election of those persons, and not to that for the federal office of a congressional representative, the indictment is for that reason insufficient.

The charge is that the conspirators *unlawfully and feloniously* induced the election officers to omit to perform their duty in this respect, which is in general conceded to be expressive of an evil intent. But counsel demand something more than this general evil intent in tampering with the poll lists, tally papers and certificates, although it is not denied that the object of the parties accused, in inducing the election officers to violate their duty, proceeded from a criminal intent, or that it was done for the purpose of affecting the returns contained in the papers that were withheld or exposing them to the danger of mutilation and alteration. It is said, however, that since the evil intent is not shown to have been specifically aimed at the returns of the vote for congressmen, the statutes of the United States can have no force so far as the infliction of any penalty is concerned; and it is asserted that Congress had no power to provide for any punishment where no intent affecting the congressional election is averred.

It would be a very singular principle to establish, that where a man was charged with a homicide, caused by maliciously shooting into a crowd with the purpose of killing some person against whom he bore malice, but with no intent to injure or kill the individual who was [754] actually struck by the shot, he should be held excused because he did not intend to kill that particular person, and had no malice against him.

The analogy of this example to the present case is close. The persons accused did desire and intend to interfere with the election returns, and they did purpose to falsify those returns, as to some of the persons, at least, who were then voted for as candidates. It is argued on their behalf that because it is not averred in the indictment that they intended to falsify the election returns with regard to the congressional vote, or to affect those particular returns, it is to be held bad. It is also insisted that the felonious intent had relation to the action of inducing the officers to omit the duty of keeping carefully the poll books and tally sheets, and although the records of the votes for congressman might possibly also suffer along with a number of other persons who might be affected by that omission, yet because there was not in the minds of the conspirators the specific intent or design to influence the congressional election, they are not to be held liable under this statute.

The object to be attained by these Acts of Congress is to guard against the danger, and the opportunity, of tampering with the election returns, as well as against direct and intentional frauds upon the vote for members of that body. The law is violated whenever the evidences concerning the votes cast for that purpose are exposed or subjected in the hands of improper persons or unauthorized individuals to the opportunity for their falsification, or to the danger of such changes or forgeries as may affect that election, whether they actually do so or not, and whether the purpose of the party guilty of thus wresting them from their proper custody and exposing them to such danger might accomplish this result.

There are many instances when an act may be criminal in its character without there being a criminal intent. Gross carelessness, by which a person may be injured or killed, while it may reduce the offense from murder to manslaughter, or modify the penalty, does not wholly relieve the person guilty of it from criminal responsibility. Governments, both national and state, and even municipal, make laws for protection against articles, such as powder or glycerine, from accidents resulting from [755] negligence, where no intention exists to cause an injury. If persons violate these laws they become liable to the penalty prescribed, because the necessity for strict care and caution in regard to such dangerous substances requires that carelessness in regard thereto, from which damage might result, should be punished, notwithstanding there may be an absence of any criminal or felonious intent.

The case before us is eminently one of this character. Crimes against the ballot have become so numerous and so serious that the attention of all legislative bodies has been turned with anxious solicitude to the means of preventing them, and to the object of securing purity in elections and accuracy in the returns by which their result is ascertained. The Acts of Congress and of the State of Indiana now under consideration are of this class. The manifest purpose of both systems of legislation is to remove the ballot-box as well as the certificates of the return of votes cast from all possible opportunity of falsification, forgery or destruction; and to say that the mere careless

omission, or the want of an intention on the part of persons who are alleged to have acted feloniously in the violation of those laws, excuses them because they did not intend to violate their provisions as to all the persons voted for at such an election, although they might have intended to affect the result as regards some of them, is manifestly contrary to common sense and is not supported by any sound authority. It may be added that the language of the Act of Congress, in describing these offenses, clearly does not require, in regard to some of these acts of omission and failure to perform the duties imposed upon election officers, that there should be alleged or proved an intention to give an opportunity for improper tampering with the records of the votes cast.

It is also strenuously insisted by counsel for the appellants in their argument that no offense under the Act of Congress is recited in the indictment. We have already stated, however, what the indictment charges, and given extracts from those Acts and the Statutes of Indiana on that subject. While we do not think it necessary to elaborate the argument, which has been fully considered in the court below, and in several opinions on writs of error and applications [756] for *habeas corpus* in various inferior tribunals, we do not doubt that the indictment sets forth a conspiracy by the parties to this appeal to induce the inspectors of election in Indianapolis to omit the discharge of their duty and to fail to safely keep and guard the poll lists, tally papers and certificates committed to their care for the precincts at which they each presided. Nor do we doubt that the statute of Indiana imposed such a duty upon those inspectors, which they were induced to violate by the persuasion and influence of the parties to this conspiracy.

We are the less inclined to enter into these controversies, as to a narrow construction of the Statutes of Indiana and the Acts of Congress, because we think they were questions properly before the district court on the trial of the prisoners. They were questions of which that court had jurisdiction and which it was its duty to decide. When decided by that court they were not subject to review here by a writ of error, nor were they in a proper or just sense questions affecting its jurisdiction. It would be as well to say that every question concerning the sufficiency and validity of an indictment, and the evidence necessary to support it, was a matter of jurisdiction, and authorized an interference, if error took place, by a writ of *habeas corpus* for its correction. That this cannot be done has been repeatedly held in this court.

The leading case on the subject is that of *Ex parte Watkins*, 28 U. S. 3 Pet. 193 [7: 650], in which the opinion was delivered by *Chief Justice* Marshall. Watkins was committed to jail in the District of Columbia by virtue of a judgment of the Circuit Court of the United States for that District. An application for a writ of *habeas corpus* was made on his behalf upon the ground that the indictment on which he was convicted did not show any jurisdiction in that court, and that it charged no offense for which he could be punished therein. The eminent Chief Justice, after remarking upon the general proposition that a commitment by the judgment of a court of competent jurisdiction is a sufficient answer to a writ of *habeas corpus* intended to effect his discharge, said: "The judgment of a court of record whose jurisdiction is final is as conclusive on all the world as [757] the judgment of this court would be. It is as conclusive on this court as it is on other courts. It puts an end to inquiry concerning the fact, by deciding it. The counsel for the prisoner admit the application of these principles to a case in which the indictment alleges a crime cognizable in the court by which the judgment was pronounced, but they deny their application to a case in which the indictment charges an offense not punishable criminally according to the law of the land. But with what propriety can this court look into the indictment? We have no power to examine the proceedings on a writ of error, and it would be strange if, under color of a writ to liberate an individual from unlawful imprisonment, we could substantially reverse a judgment which the law has placed beyond our control. An imprisonment under a judgment cannot be unlawful, unless that judgment be an absolute nullity; and it is not a nullity if the court has general jurisdiction of the subject, although it should be erroneous. The Circuit Court for the District of Columbia is a court of record, having general jurisdiction over criminal cases. An offense cognizable in any court is cognizable in that court. If the offense be punishable by law, that court is competent to inflict the punishment. The judgment of such a tribunal has all the obligation which the judgment of any tribunal can have. To determine whether the offense charged in the indictment be legally punishable or not, is among the most unquestionable of its powers and duties. The decision of this question is the exercise of jurisdiction, whether the judgment be for or against the prisoner. The judgment is equally binding in the one case and in the other, and must remain in full force unless reversed regularly by a superior court capable of reversing it."

It may be said that this language is too broad in asserting that because every court must pass upon its own jurisdiction, that such decision is itself the exercise of a jurisdiction which belongs to it, and cannot, therefore, be questioned in any other court. But we do not so understand the meaning of the court. It certainly was not intended to say that because a federal court tries a prisoner for an ordinary common-law offense, as burglary, assault and battery, [758 or larceny, with no averment or proof of any offense against the United States, or any connection with a statute of the United States, and punishes him by imprisonment, that he cannot be released by *habeas corpus* because the court which tried him had assumed jurisdiction.

In all such cases, when the question of jurisdiction is raised, the point to be decided is, whether the court has jurisdiction of that class of offenses. If the statute has invested the court which tried the prisoner with jurisdiction to punish a well defined class of offenses, as forgery of its bonds or perjury in its courts, its judgment as to what acts were necessary under these statutes to constitute the crime is not reviewable on a writ of *habeas corpus*.

And, as the laws of Congress are only valid when they are within the constitutional power

of that body, the validity of the statute under which a prisoner is held in custody may be inquired into under a writ of *habeas corpus* as affecting the jurisdiction of the court which ordered his imprisonment. And if their want of power appears on the face of the record of his condemnation, whether in the indictment or elsewhere, the court which has authority to issue the writ is bound to release him. *Ex parte Siebold*, 100 U. S. 371 [25:717].

So, while we have attempted to answer the main argument of prisoners' counsel, that Congress had no power to punish an act not specifically intended to affect the election of a member of Congress, though the act was done with a felonious intent, and that if it had such power it has not exercised it, we thought it not necessary, under the principle laid down in *Ex parte Watkins*, to inquire into the sufficiency of the allegation of the more minute details of the offense as charged in the indictment. We are not here to consider it as on a demurrer before trial. But finding that the district court had a general jurisdiction of this class of offenses, we proceed no further in the inquiries on that subject.

In *Ex parte Parks*, 93 U. S. 23 [23:788] this question was very ably reviewed upon all the authorities. The case of Watkins was reaffirmed, and the general proposition announced [759] that it was apparent from a review of the cases that "where the prisoner is in execution upon a conviction the writ ought not to be issued, or, if issued, the prisoner should at once be remanded, if the court below had jurisdiction of the offense, and did not act beyond the powers conferred upon it. * * * The district court had plenary jurisdiction, both of the person, the place, the cause, and everything about it. To review the decision of that court by means of a writ of *habeas corpus* would be to convert that writ into a mere writ of error, and to assume an appellate power which has never been conferred upon this court."

In *Ex parte Yarbrough*, 110 U. S. 651 [28:274] the subject was again examined very fully. The court reiterated the doctrine that the writ of *habeas corpus* cannot be converted into a writ of error by which the judgment of the court passing the sentence can be reviewed. The court there said: "If that court had jurisdiction of the party and of the offense for which he was tried, and has not exceeded its powers in the sentence which it pronounced, this court can inquire no further. This principle disposes of the argument made before us on the insufficiency of the indictments under which the prisoners in this case were tried. Whether the indictment sets forth in comprehensive terms the offense which the statute describes and forbids, and for which it prescribes a punishment, is in every case a question of law, which must necessarily be decided by the court in which the case originates, and is therefore clearly within its jurisdiction. Its decision on the conformity of the indictment to the provisions of the statute may be erroneous, but if so it is an error of law made by a court acting within its jurisdiction, which could be corrected on a writ of error if such writ was allowed, but which cannot be looked into on a writ of *habeas corpus* limited to an inquiry into the existence of jurisdiction on the part of that court." Citing *Ex parte Watkins* and *Ex parte Parks*, *supra*.

We cannot better close this opinion than by a further extract from that of the court in *Ex parte Yarbrough*, p. 666 [279]: "In a republican government, like ours, where political power is [760] reposed in representatives of the entire body of the people, chosen at short intervals by popular elections, the temptations to control these elections by violence and by corruption is a constant source of danger. Such has been the history of all republics, and, though ours has been comparatively free from both these evils in the past, no lover of his country can shut his eyes to the fear of future danger from both sources."

The judgment of the Circuit Court, denying the writ of habeas corpus, *is affirmed.*

Mr. Justice **Field**, dissenting:

The petitioners and appellants were indicted in the District Court of the United States for the District of Indiana for an alleged conspiracy to commit an offense against the United States, and were convicted and sentenced to pay a fine and be imprisoned. The fine of Bernhamer was $1,000, and his imprisonment was for one year; the fine of Coy was $100 and his imprisonment was for eighteen months. The offense charged was that the accused conspired with one Perkins to induce the inspectors of an election held in Indiana, in November, 1886, at which a representative in Congress was voted for, to omit a duty imposed upon them by the laws of that State, to safely keep the poll lists of the voters, the tally papers, and the certificates of the judges of election, until they were delivered to the clerk of the county, or to its board of canvassers, by whom the votes were to be examined and counted; and, to effect the object of the conspiracy, persuaded the inspectors to deliver those papers to persons who had no authority to take charge of them.

On this appeal we can only inquire whether the circuit court erred in refusing to issue the writ; and I admit in determining upon the propriety of issuing it, the sole question that court could consider was whether the District Court of Indiana, in which the appellants were indicted, tried and convicted, had jurisdiction of the offense and of the parties accused, and to render the judgment pronounced. As was said in *Ex parte Siebold*, 100 U. S. 375 [25:718]: "The only ground on which this court, or any [761] court, without some special statute authorizing it, will give release on *habeas corpus* to a prisoner under conviction and sentence of another court, is the want of jurisdiction in such court over the person or the cause, or some other matter rendering its proceedings void." But that this court and the circuit court can exercise jurisdiction by *habeas corpus*, in cases where it is alleged that by the action of an inferior tribunal a citizen of the United States has been unlawfully deprived of his personal liberty, is well established; and they can look into the record of the inferior court, under whose judgment the parties are restrained of their liberty, to ascertain whether it had jurisdiction to hold and try them, and render the judgment. If it appear upon such examina-

tion that the inferior court had jurisdiction, the further consideration of the case is ended. The writ of *habeas corpus* cannot be made to take the place of a writ of error, so as to authorize an examination into any alleged errors of the inferior court in reaching its conclusion. But if it had no jurisdiction over the parties or of the offense with which they are charged, or to render the judgment, the circuit court and this court can interfere and discharge them. The broad doctrine laid down in *Ex parte Watkins*, 28 U. S. 3 Pet. 193 [7:650], that where no revision by a higher court of the judgment of a court in a criminal case is authorized, another court will not inquire into its jurisdiction upon *habeas corpus*, has been modified by subsequent decisions.

As in the present case no objection was made before the circuit court, or is made here, to the jurisdiction of the District Court of Indiana over the persons of the accused, or to render the judgment pronounced, if the offense charged was one of which that court could take cognizance, the sole question before us is whether the indictment charges an offense thus cognizable.

In *Ex parte Siebold* and *Ex parte Clarke*, 100 U. S. 371, 399 [25: 717, 715], it was held that Congress had the power under the Constitution to adopt the laws of the States respecting the election of officers of the States, where at such election a member of Congress is to be voted for, and that it could impose a punishment for [762] a violation of such laws. This was held in the face of the objection that it was not competent for Congress to punish a state officer for the manner in which he discharged the duties imposed upon him by the laws of the State; nor to make the exercise of its punitive power depend upon the legislation of the States. But the court at the same time held that the adoption by Congress of the laws of the State only extended so far as the election concerned representatives in Congress. Its language was: "If, for its own convenience, a State sees fit to elect state and county officers at the same time, and in conjunction with the election of representatives, Congress will not thereby be deprived of the right to make regulations in reference to the latter. We do not mean to say, however, that for any acts of officers of election, having exclusive reference to the election of state or county officers, they will be amenable to federal jurisdiction; nor do we understand that the enactments of Congress now under consideration have any application to such acts." P. 393 [725].

It would seem, therefore, essential in an indictment presented in an United States Court, for an offense cognizable by that court under these state laws, that it should aver that the violation of them was intended to affect the election of a member of Congress. How inspectors of election or other officers of a State may conduct the elections, so far as those elections relate to state officers, and what liability they may incur in such cases for the omission of duties imposed upon them by state laws, are matters entirely within the cognizance of the state tribunals. A violation of the state laws as to the election of persons to fill state offices cannot be made the subject of punishment by a federal court, nor, of course, a conspiracy to induce state officers to violate those laws. The judicial power of the United States does not extend to a case of that kind. The Constitution defines and limits that power. It declares that the power shall extend to cases in law and equity arising under the Constitution, the laws of the United States, and treaties made under their authority; to cases affecting ambassadors, other public ministers, and consuls; to cases of admiralty and maritime jurisdiction, and to various controversies to which the United [763] States or a State may be a party, or between citizens of different States, or citizens of the same State claiming lands under grants of different States, or between citizens of a State and any foreign State, citizens or subjects. Whilst the judicial power thus defined and limited may be applied to new cases as they arise under the Constitution and laws of the United States, it cannot be extended by Congress so as to include cases not enumerated in that instrument, as has been often held by this court.

The indictment in this case charges a conspiracy to induce certain election officers appointed under the laws of Indiana to commit a crime against the United States, the crime being the alleged omission by them to perform certain duties imposed by the laws of the State respecting elections. But it contains no allegation that the alleged conspiracy was to affect the election of a member of Congress; which, as said above, appears to me to be essential to bring the offense within the jurisdiction of the court. If the conspiracy was to affect the election of a state officer, no offense was committed cognizable in the District Court of the United States. If it had any other object than to affect the election of a member of Congress, it was a matter exclusively for the cognizance of the state courts.

In several States, and probably in a majority of them, numerous officers, state, county, city, and village, are elected at the same time with representatives in Congress; and according to the present decision a conspiracy to persuade the officers of election to omit any duty imposed upon them under the laws of the State, though designed merely to affect the election of an inferior magistrate of a village, is an offense against the United States, punishable in the federal courts. Thus obedience to the laws of the State in matters of even local offices, if a member of Congress is voted for at the same election, may be enforced by the courts of the United States, instead of by the proper tribunals of the State whose laws have been violated. I am not able to assent to a doctrine which leads to this result, and gives the federal courts power to intermeddle with the action of state officials in an election for local offices when- [764] ever a member of Congress may have been voted for at the same time. I agree to what is said by the court as to the temptations existing in a republican government, where political power is reposed in representatives of the entire body of the people, chosen at short intervals by popular elections, to control those elections by violence and corruption. But I do not perceive in that fact any reason why the punishment of fraud committed or designed at state elections for state officers should be transferred to the federal courts. The States are as much interested in guarding against frauds at such

elections, and in maintaining their purity, as it is possible for the General Government to be. They do not require for their protection in such matters the aid of the General Government, any more than in other domestic affairs. As observed on a former occasion, "they are invested with the sole power to regulate domestic affairs of the highest moment to the prosperity and happiness of their people, affecting the acquisition, enjoyment, transfer and descent of property; the marriage relation and the education of children; and if such momentous and vital concerns may be wisely and safely intrusted to them, I do not think that any apprehension need be felt if the supervision of elections in their respective States should also be left to them," where, I may add, it properly belongs. 100 U. S. 420 [25: 733].

I am of opinion that the writ of *habeas corpus* should have been issued in this case by the circuit court, and that its order denying the petition of the appellants should, therefore, be reversed.

---

[700] PLYANT MAHON, *Appt.*,

v.

ABNER JUSTICE, Jailor of PIKE COUNTY, KENTUCKY.

(See S. C. Reporter's ed. 700-718.)

Surrender by State of fugitives from justice—person abducted—habeas corpus—*forcible abduction—jurisdiction—right of asylum.*

1. A surrender of fugitives from justice, to the State whose laws have been violated, is the only aid provided by the laws of the United States for the punishment of depredations and violence committed in one State, by intruders and lawless bands from another State.

2. No mode is provided by which, through the courts of the United States, a person unlawfully abducted from one State to another can be restored to the State from which he was taken, if held upon any process of law for offenses against the State to which he has been carried.

3. If not thus held, he can, like any other person wrongfully deprived of his liberty, obtain his release on *habeas corpus*.

4. A person indicted for a felony in one State, forcibly abducted from another State, and brought to the State where he was indicted, by parties acting without warrant or authority of law, is not entitled, under the Constitution or laws of the United States, to release from detention under the indictment, by reason of such forcible and unlawful abduction.

5. The jurisdiction of the court in which the indictment is found is not impaired by the manner in which the accused is brought before it. There is no analogy between civil and criminal cases in this respect.

6. The laws of the United States do not recognize any right of asylum, on the part of a fugitive from justice, in any State to which he has fled.

[No. 1411.]

Argued April 23, 24, 1888. Decided May 14, 1888.

APPEAL from a judgment of the Circuit Court of the United States for the District of Kentucky, denying a motion for the discharge of the appellant upon *habeas corpus*, and ordering the Marshal to return him to the jailor of Pike County, Kentucky. *Affirmed.*

Statement by *Mr. Justice* **Field:**

On the 9th of February, 1888, the Governor of West Virginia, on behalf of that State, presented to the District Court of the United States for the District of Kentucky a petition, representing that during the month of September, 1887, a requisition was made upon him as governor aforesaid, by the Governor of Kentucky, for Plyant Mahon, alleged to have committed murder in the latter State, and to have fled from its justice, and to be then at large in West Virginia; that pending correspondence between the two Governors, and the consideration of legal questions growing out of the requisition, and during the month of December, 1887, or January, 1888, the said Plyant Mahon, while residing in West Virginia, was, in violation of her laws, and of the Constitution and laws of the United States, and without warrant or other legal process, arrested by a body of armed men from Kentucky, and by force and against his will, conveyed out of the State of West Virginia into the County of Pike, in the State of Kentucky, and there confined in the common jail of the county, where he has been ever since, and deprived of his liberty by the keeper thereof. [701

The petitioner further represented that on the 1st of February, 1888, he as Governor of West Virginia and on her behalf, made a requisition upon the Governor of Kentucky, that Plyant Mahon be released from confinement, set at large, and returned in safety to the State of West Virginia; and that the demand was, on the 4th of that month, refused on the ground, among others, that the questions involved were judicial and not executive. The petitioner, therefore, in alleged vindication of the rights of the State of West Virginia, and of every citizen thereof, and especially of the said Plyant Mahon thus confined and deprived of his liberty, to the end that due process of law secured by both the Constitution of the United States and the Constitution of the State of West Virginia, and the laws made in pursuance thereof, might be respected and enforced, prayed that the writ of *habeas corpus* be granted, directed to the keeper of the jail, commanding him to produce the body of said Plyant Mahon, together with the cause of his detention, before the judge of the court at such time and place as might be designated, and that judgment be rendered that said Plyant Mahon be discharged from said confinement and custody, and be safely returned within the jurisdiction of the State of West Virginia. At the same time another petition was presented to the court by one John A. Sheppard, representing that he was a citizen of West Virginia, and setting forth substantially the facts contained in the petition of the Governor, and praying for a like writ of *habeas corpus*. Subsequently the name of Plyant Mahon was substituted for that of John A. Sheppard, and the proceedings on the petition were conducted in his name.

The court ordered the writ to issue, directed to the Jailor of Pike County, requiring him to produce the body of Mahon before the District Court of the United States in the City of Louisville on the 20th of the month, and there to abide such order as might be made in the premises. The jailor of the county, Abner Justice, [702
made a return to the writ substantially as follows: that he held Plyant Mahon in custody and confined in the jail of Pike County by virtue of and in obedience to three writs issued by the

clerk of the criminal court of the county under its order, each for the arrest of Mahon to answer an indictment pending against him and others for the crime of willful murder, alleged to have been committed in that county, a crime for the trial of which that court had full jurisdiction, and commanding the officer arresting Mahon to deliver him to the jailor of the county; copies of which writs were annexed to the return; that under the writ of *habeas corpus* he was proceeding to the City of Louisville to produce the body of Mahon before the United States District Court there, when he was met on his way by the United States Marshal of the District of Kentucky, who, by virtue of the order of the district court, took Plyant Mahon into his custody. He further returned that three indictments against Mahon and others for willful murder were found by the grand jury of Pike County, Kentucky, and returned into the circuit court of said county at its September Term, 1882, at which time that court had jurisdiction of the crime charged; that, by order of the court, made at each subsequent term, writs were issued by the clerk thereof for the arrest of Plyant Mahon to answer the indictments, until the criminal court of the county was established by Act of the General Assembly of Kentucky in 1884, by which the jurisdiction previously vested in the circuit court was transferred to and vested in said criminal court; that, by orders of this latter court from term to term, writs were issued by the clerk thereof for the arrest of Mahon to answer the indictments; but none of them were executed upon him until January 12, 1888, when he was arrested in Pike County by the sheriff thereof, and delivered by him to the respondent, jailor of said county, in obedience to writs which were issued, and under the command and authority of which he was held by the respondent as jailor in custody in the jail of said county, when the writ of *habeas corpus* was served upon him.

The jailor subsequently, by leave of the
703] court, made a further return, in which he stated that a requisition was made by the Governor of Kentucky upon the Governor of West Virginia for the arrest and rendition to Kentucky of said Plyant Mahon as alleged in the Governor's petition; that it was accompanied by a copy of the indictments referred to, certified by the Governor of Kentucky to be authentic; that at the same time the Governor appointed one Frank Phillips as the agent of the State to receive and bring to the State of Kentucky the said Mahon, as provided by law in such cases; that on the 30th of September, 1887, the Governor of West Virginia returned said requisition to the Governor of Kentucky, informing him that an affidavit, as required by the statute of West Virginia, should accompany the requisition before the same could be complied with; that thereafter the Governor of Kentucky returned the requisition to the Governor of West Virginia, accompanied by the affidavit required; that afterwards, about the 12th of January, 1888, Frank Phillips and others, with force and arms, violently seized the said Mahon in the State of West Virginia and brought him against his will into the County of Pike in the State of Kentucky, where the writs mentioned in the respondent's original return were executed upon him by the sheriff of Pike County; that at that time no warrant for the arrest of Mahon had been issued or ordered to be issued by the Governor of West Virginia in compliance with said requisition; and afterwards, on the 30th of January, 1888, he informed the Governor of Kentucky that he declined to issue his warrant for the arrest of Plyant Mahon, in compliance with the requisition made upon him, because he had become satisfied, upon investigation of the facts, that Mahon was not guilty of the crime charged against him in the indictments; and that subsequently, on the 1st of February, 1888, the Governor of West Virginia made upon the the Governor of Kentucky a demand for the release of Mahon from the jail of the County of Pike and his safe conduct back into West Virginia, with which demand the Governor of Kentucky declined to comply, on the ground that Mahon was in the custody of the judicial department of the Commonwealth, and that the question of his release upon the grounds al-
leged in the demand was one which the courts [704]
alone could determine, and that the adjudication thereof was not one within the purview of his powers and duties as governor. The facts thus detailed were established before the court on the hearing upon the writ and are contained in its findings.

On the 3d of March the court denied the motion for the discharge of Plyant Mahon, and ordered the marshal to return him to the Jailor of Pike County. From this order an appeal was taken to the Circuit Court of the United States and there affirmed. To review the latter order the case is brought here.

Mr. **Eustace Gibson,** for appellant.

Mr. **J. Proctor Knott,** for appellee:

A State is never responsible for nor bound by the acts of unauthorized individuals.

State v. *Smith*, 1 Bailey, L. 291; *People* v. *Rowe*, 4 Park. Cr. Cas. 253; *State* v. *Ross*, 21 Iowa, 467; *Re Noyes*, 17 Alb. L. J. 407; *U. S.* v. *Lawrence*, 13 Blatchf. 306; *Ex parte Ker*, 18 Fed. Rep. 167.

If the arrest was made in violation of the laws of a foreign country, that country must vindicate its own laws by proceeding against the person who violated them.

Ex parte Scott, 9 Barn. & C. 446; *State* v. *Smith*, 1 Bailey, L. 291; *State* v. *Brewster*, 7 Vt. 118.

No irregularity in the extradition of a fugitive criminal, when brought within the jurisdiction of the court having cognizance of his crime, can be available to him as a means of escaping trial and punishment.

Dow's Case, 18 Pa. 37; *People* v. *Rowe*, 4 Park. Cr. Cas. 253; *Re Noyes*, 17 Alb. L. J. 407; *Ex parte Ker*, 18 Fed. Rep. 171.

Mr. Justice **Field** delivered the opinion of the court:

The Governor of West Virginia, in his application on behalf of the State for the writ of *habeas corpus* to obtain the discharge of Mahon and his return to that State, proceeded upon the theory that it was the duty of the United States to secure the inviolability of the territory of the State from the lawless invasion of persons from other States, and when parties had been forcibly taken from her territory and

jurisdiction to afford the means of compelling their return; and that this obligation could be enforced by means of the writ of *habeas corpus* as the court in discharging the party abducted could also direct his return to the State from which he was taken, or his delivery to persons who would see that its order in that respect was carried out.

If the States of the Union were possessed of an absolute sovereignty, instead of a limited one, they could demand of each other reparation for an unlawful invasion of their territory and the surrender of parties abducted, and of parties committing the offense, and in case of refusal to comply with the demand, could resort to reprisals, or take any other measures they might deem necessary as redress for the [705] past and security for the future. But the States of the Union are not absolutely sovereign. Their sovereignty is qualified and limited by the conditions of the Federal Constitution. They cannot declare war or authorize reprisals on other States. Their ability to prevent the forcible abduction of persons from their territory consists solely in their power to punish all violations of their criminal laws committed within it, whether by their own citizens or by citizens of other States.

If such violators have escaped from the jurisdiction of the State invaded, their surrender can be secured upon proper demand on the executive of the State to which they have fled. The surrender of the fugitives in such cases, to the State whose laws have been violated, is the only aid provided by the laws of the United States for the punishment of depredations and violence committed in one State by intruders and lawless bands from another State. The offenses committed by such parties are against the State; and the laws of the United States merely provide the means by which their presence can be secured in case they have fled from its justice. No mode is provided by which a person unlawfully abducted from one State to another can be restored to the State from which he was taken, if held upon any process of law for offenses against the State to which he has been carried. If not thus held he can, like any other person wrongfully deprived of his liberty, obtain his release on *habeas corpus*. Whether Congress might not provide for the compulsory restoration to the State of parties wrongfully abducted from its territory upon application of the parties, or of the State, and whether such provision would not greatly tend to the public peace along the borders of the several States, are not matters for present consideration. It is sufficient now that no means for such redress through the courts of the United States have as yet been provided.

The abduction of Mahon by Phillips and his aids was made, as appears from the return of the respondent to the writ, and from the findings of the court below, without any warrant or authority from the Governor of West Virginia. It is true that Phillips was appointed by the Governor of Kentucky as agent of the State to receive Mahon upon his surrender on [706] the requisition; but no surrender having been made, the arrest of Mahon and his abduction from the State were lawless and indefensible acts, for which Phillips and his aids may justly be punished under the laws of West Virginia. The process emanating from the Governor of Kentucky furnished no ground for charging any complicity on the part of that State in the wrong done to the State of West Virginia.

It is true, also, that the accused had the right while in West Virginia of insisting that he should not be surrendered to the Governor of Kentucky by the Governor of West Virginia, except in pursuance of the Acts of Congress, and that he was entitled to release from any arrest in that State not made in accordance with them; but having been subsequently arrested in Kentucky under the writs issued on the indictments against him, the question is not as to the validity of the proceeding in West Virginia, but as to the legality of his detention in Kentucky. There is no comity between the States by which a person held upon an indictment for a criminal offense in one State can be turned over to the authorities of another, though abducted from the latter. If there were any such comity, its enforcement would not be a matter within the jurisdiction of the courts of the United States. By comity nothing more is meant than that courtesy on the part of one State, by which, within her territory, the laws of another State are recognized and enforced, or another State is assisted in the execution of her laws. From its nature the courts of the United States cannot compel its exercise when it is refused; it is admissible only upon the consent of the State, and when consistent with her own interests and policy. *Bank of Augusta* v. *Earle*, 38 U. S. 13 Pet. 519, 589 [10:274, 308]; Story, Confl. L. § 30.

The only question, therefore, presented for our determination is whether a person indicted for a felony in one State, forcibly abducted from another State and brought to the State where he was indicted, by parties acting without warrant or authority of law, is entitled under the Constitution or laws of the United States, to release from detention under the indictment by reason of such forcible and unlawful abduction. Section 753 of the Revised Statutes declares that "the writ of *habeas corpus* [707] shall in no case extend to a prisoner in jail, unless where he is in custody under or by color of the authority of the United States, or is committed for trial before some court thereof; or is in custody for an act done or omitted in pursuance of a law of the United States, or of an order, process, or decree of a court or judge thereof; or is in custody in violation of the Constitution or of a law or treaty of the United States."

To bring the present case within the terms of this section it is contended that the detention of the appellant is in violation of the provisions of the 14th Amendment of the Constitution, that "no State shall make or enforce any law which shall abridge the privileges or immunities of citizens of the United States, nor shall any State deprive any person of life, liberty or property, without due process of law;" and also in violation of the clause of the Constitution providing for the extradition of fugitives of justice from one State to another, and the laws made for its execution.

As to the 14th Amendment it is difficult to perceive in what way it bears upon the subject. Assuming what is not conceded, that the fugi-

tive has a right of asylum in West Virginia, the State of Kentucky has passed no law which infringes upon that right or upon any right or privilege or immunity which the accused can claim under the Constitution of the United States. The law of that State which is enforced is a law for the punishment of the crime of murder, and she has merely sought to enforce it by her officers under process executed within her territory. She did not authorize the unlawful abduction of the prisoner from West Virginia.

As to the removal from the State of the fugitive from justice in a way other than that which is provided by the second section of the fourth article of the Constitution, which declares that "a person charged in any State with treason, felony, or other crime, who shall flee from justice, and be found in another State, shall, on demand of the executive authority of the State from which he fled, be delivered up, to be removed to the State having jurisdiction of the crime," and the laws passed by Congress to [708] carry the same into effect—it is not perceived how that fact can affect his detention upon a warrant for the commission of a crime within the State to which he is carried. The jurisdiction of the court in which the indictment is found is not impaired by the manner in which the accused is brought before it. There are many adjudications to this purport cited by counsel on the argument, to some of which we will refer.

The first of these is that of *Ex parte Scott*, 9 Barn. & C. 446. There it appeared that the prisoner, who had been indicted in the King's Bench for perjury, and for whose apprehension a warrant had been issued, was arrested by the officer, to whom the warrant was specially directed, at Brussels, in Belgium, and conveyed to England. A rule *nisi* was then obtained from the court for a writ of *habeas corpus*, and the question of her right to be released because of her illegal arrest in a foreign jurisdiction was argued before *Lord* Tenterden. He held that where a party charged with a crime was found in the country, it was the duty of the court to take care that he should be amenable to justice, and it could not consider the circumstances under which he was brought there, and that if the act complained of was done against the law of the foreign country, it was for that country to vindicate its own law, and the rule was discharged.

The next case is that of *State* v. *Smith*, which was very fully and elaborately considered by the Chancellor and the Court of Appeals of South Carolina. 1 Bailey, 283. Though this case did not arise upon the forcible arrest in another jurisdiction of the offender to answer an indictment, but to answer to a judgment, the conditional release from which he had disregarded, the principle involved was the same. Smith had been convicted of stealing a slave and sentenced to death. He was pardoned on condition that he would undergo confinement during a designated period, and within fifteen days afterwards leave the State and never return. The pardon was accepted, and the prisoner remained in confinement for the time prescribed, and within fifteen days afterwards removed to North Carolina, and remained there some years, [709] when he returned to South Carolina. The Governor of the latter State then issued a proclamation stating that the prisoner was in the State in violation of the condition of his pardon, and offering a reward for his arrest. Smith afterwards returned to North Carolina, where he was forcibly seized by parties from South Carolina, without warrant or authority from any officer or tribunal of either State, except the proclamation of the Governor of South Carolina, and was brought into the latter State and lodged in jail. He sued out a writ of *habeas corpus*, and was brought before the Chancellor of the State, and his discharge was moved on the ground that his arrest in North Carolina was illegal, and his detention equally so. The motion was refused and the prisoner remanded. The Chancellor gave great consideration to the case, and in the following extract from his opinion furnishes an answer to the principal objections urged in the case at bar to the detention of the appellant: "The prisoner," said the Chancellor, "is charged with a felonious violation of the laws of this State. It is answered, that other persons have been guilty, in relation to him, of an outrageous violation of the laws of another State, and therefore he ought be discharged. I perceive no connection between the premises and the inference. The chief argument is drawn from supposed consequences, which are likely to follow, by bringing our government into collision with others. This is less to be apprehended among the States of the Union, where the Federal Constitution makes provision for a satisfaction of a violated jurisdiction. But suppose the case of a foreign State. There is no offense in trying and, if he be guilty, convicting the subject of a foreign government who has been guilty of a violation of our laws within our jurisdiction. Or, if he had made his escape from our jurisdiction, and by any accident were thrown within it again; if he were shipwrecked on our coast, or fraudulently induced to land, by a representation that it was a different territory, with a view to his being given up to prosecution; there would seem to be no reason for exempting him from responsibility to our laws. In the case we are considering, the prisoner is found in our jurisdiction, in consequence of a lawless act of violence exercised upon him by individuals. The true cause of offense to the foreign [7 government is the lawless violation of its territory. But a similar violation of a foreign jurisdiction might be made for other purposes; and it would not be in the power of our tribunals to afford satisfaction. An individual might be kidnapped and brought within our territory for the purpose of extorting money from him, or murdering him. It would not seem to be an appropriate satisfaction to the injured government to exempt a person justly liable to punishment under our laws, where we have no means of giving up to punishment those who have violated its laws. But there is no difficulty among the States of the Union. Upon demand by the State of North Carolina, those who have violated its laws will be given up to punishment." 1 Bailey (S. C.), 292.

Subsequently the prisoner was brought before the presiding judge of the Court of Appeals of the State to answer to a rule to show cause why his original sentence should not be executed and a date fixed for his execution. He

showed for cause that he had received an executive pardon, and had performed all the conditions annexed to it, except the one which prohibited his return to the State, which, it was submitted, was illegal and void. And for further cause, he showed that he had been illegally arrested in North Carolina and brought within the jurisdiction of this State against his own consent, and it was, therefore, insisted that he was not amenable to the courts of South Carolina, but was entitled to be sent back to North Carolina, or to be discharged, and sufficient time allowed him to return thither. The judge held the grounds to be insufficient, and the defendant then moved the court to reverse his decision on substantially the same grounds, and, among them, that he was entitled to be discharged in consequence of having been illegally arrested in North Carolina and brought into the State. Upon this the court said: "The pursuit of the prisoner into North Carolina and his arrest there was certainly a violation of the sovereignty of that State, and was an act which cannot be commended. But that was not the act of the State, but of a few of its citizens, for which the Constitution of the United States has provided a reparation. It gives the Governor [711] of that State the right to demand them of the Governor of this, and imposes on the latter the obligation to surrender them; but until it is refused there can be no cause of complaint." And the motion was refused.

In the case of *State* v. *Brewster* the same doctrine was announced by the Supreme Court of Vermont. 7 Vt. 118. There it appeared that the prisoner charged with crime had escaped to Canada and was brought back against his will, and without the consent of the authorities of that Province, and he sought to plead his illegal capture and forcible return in bar of the indictment; but his application was refused, the court observing that the escape of the prisoner into Canada did not purge the offense, nor oust the jurisdiction of the court, and he being within its jurisdiction it was not for it to inquire by what means or in what manner he was brought within the reach of justice. Said the court: "If there were anything improper in the transaction it was not that the prisoner was entitled to protection on his own account. The illegality, if any, consists in a violation of the sovereignty of an independent nation. If that nation complain it is a matter which concerns the political relations of the two countries, and in that aspect is a subject not within the constitutional powers of this court."

In *State* v *Ross* the Supreme Court of Iowa declared the same doctrine, and stated the distinction between civil and criminal cases where the party is by fraud or violence brought within the jurisdiction of the court. 21 Iowa, 467. The defendants were charged with larceny, and were arrested in Missouri and brought by force and against their will, by parties acting without authority, either of a requisition from the Governor or otherwise, to Iowa, where an indictment against them had been found. In Iowa they were rearrested, and turned over to the civil authorities for detention and trial. It was contended that their arrest was in violation of law; that they were brought within the jurisdiction of the State by fraud and violence; that comity to a sister State and a just appreciation of the rights of the citizen, and a due regard to the integrity of the law, demanded that the court should under such circumstances refuse [712] its aid; and that there could be no rightful exercise of jurisdiction over the parties thus arrested. But the court answered that "the liability of the parties arresting them (the defendants) without legal warrant, for false imprisonment or otherwise, and their violation of the Penal Statutes of Missouri, may be ever so clear, and yet the prisoners not be entitled to their discharge. The offense being committed in Iowa, it was punishable here, and an indictment could have been found without reference to the arrest. There is no fair analogy between civil and criminal cases in this respect. In the one (civil), the party invoking the aid of the court is guilty of fraud or violence in bringing the defendant or his property within the jurisdiction of the court. In the other (criminal), the people, the State, is guilty of no wrong. The officers of the law take the requisite process, find the prisoners charged within the jurisdiction, and this, too, without force, wrong, fraud, or violence on the part of any agent of the State or officer thereof. And it can make no difference whether the illegal arrest was made in another State or another government."

Other cases might be cited from the state courts holding similar views. There is indeed an entire concurrence of opinion as to the ground upon which a release of the appellant in the present case is asked, namely, that his forcible abduction from another State, and conveyance within the jurisdiction of the court holding him, is no objection to his detention and trial for the offense charged. They all proceed upon the obvious ground that the offender against the law of the State is not relieved from liability because of personal injuries received from private parties, or because of indignities committed against another State. It would indeed be a strange conclusion, if a party charged with a criminal offense could be excused from answering to the government whose laws he had violated because other parties had done violence to him, and also committed an offense against the laws of another State.

The case of *Ker* v. *Illinois*, decided by this court, 119 U S. 437 [30:421], has a direct bearing upon the question presented here, whether a forcible and illegal capture in another State [713] is in violation of any rights secured by the Constitution and laws of the United States. In that case it appeared that Ker was indicted in Cook County, Illinois, for embezzlement and larceny. He fled the country and went to Peru. Proceedings were instituted for his extradition under the treaty between that country and the United States, and application was made by our government for his surrender, and a warrant was issued by the President, directed to one Julian, as messenger, to receive him from the authorities of Peru, upon his surrender, and to bring him to the United States. Julian having the necessary papers went to Peru, but without presenting them to any officer of the Peruvian Government, or making any demand on that government for the surrender of Ker, forcibly arrested him, placed him on board the United States vessel Essex, then lying in the harbor of Callao, kept him a close prisoner until the arrival of that vessel at Honolulu, in

the Hawaiian Islands, where, after some detention, he was conveyed in the same forcible manner on board another vessel, in which he was carried a prisoner to San Francisco, California. Before his arrival in that State the Governor of Illinois had made a requisition on the Governor of California, under the laws of the United States, for his delivery as a fugitive from justice. The Governor of California accordingly made an order for his surrender to a person appointed by the Governor of Illinois to receive him and take him to the latter State. On his arrival at San Francisco he was immediately placed in the custody of this agent, who took him to Cook County, where the process of the criminal court was served upon him, and he was held to answer the indictment. He then sued out a writ of *habeas corpus* before the Circuit Court of the State, contending that his arrest and deportation from Peru was a violation of the treaty between that government and ours, and that consequently his subsequent detention under the process of the state court was unlawful. The circuit court remanded him to jail, holding that whatever illegality might have attended his arrest it could not affect the jurisdiction of the court, or release him from liability to the State whose laws he had violated. He then applied to the Circuit Court of the [714] United States for a writ of *habeas corpus*, asking his release upon the same ground; but the court refused it, holding that it was not competent to look into the circumstances under which the capture and the transfer of the prisoner from Peru to the United States were made, nor to free him from the consequences of the lawful process which had been served upon him for the offense which he was charged with having committed in the State of Illinois. When arraigned on the indictment in the trial court he raised similar questions on a plea in abatement, which was held bad on demurrer; and after conviction he carried the case on a writ of error to the Supreme Court of the State, where the same conclusion was reached, and the judgment against him was affirmed. He then brought the case to this court, where it was contended that under the treaty of extradition with Peru, he had acquired by his residence in that country a right of asylum—a right to be free from molestation for the crime committed in Illinois—a right that he should be forcibly removed from Peru to the State of Illinois only in accordance with the provisions of the treaty, and that this right was one which he could assert in the courts of the United States. But the court answered that there was no language in the treaty on the subject of extradition which said in terms that a party fleeing from the United States to escape punishment for a crime became thereby entitled to an asylum in the country to which he had fled; that it could not be doubted that the Government of Peru might, of its own accord, without any demand from the United States, have surrendered Ker to an agent of Illinois, and that such surrender would have been valid within Peru; that it could not, therefore, be claimed, either by the terms of the treaty or by implication, that there was given to a fugitive from justice in one of those countries any right to remain and reside in the other; and that if the right of asylum meant anything it meant that.

So in this case, it is contended that, because under the Constitution and laws of the United States a fugitive from justice from one State to another can be surrendered to the State where the crime was committed, upon proper proceedings taken, he has the right of asylum [715] in the State to which he has fled, unless removed in conformity with such proceedings, and that this right can be enforced in the courts of the United States. But the plain answer to this contention is that the laws of the United States do not recognize any such right of asylum, as is here claimed, on the part of a fugitive from justice in any State to which he has fled; nor have they, as already stated, made any provision for the return of parties who, by violence and without lawful authority, have been abducted from a State. There is, therefore, no authority in the courts of the United States to act upon any such alleged right. In *Ker* v. *Illinois* the court said that the question of how far the forcible seizure of the defendant in another country, and his conveyance by violence, force, or fraud to this country could be made available to resist trial in the state court for the offense charged upon him, was one which it did not feel called upon to decide, for in that transaction it did not see that the Constitution, or laws, or treaties of the United States guaranteed to him any protection. So in this case we say that, whatever effect may be given by the state court to the illegal mode in which the defendant was brought from another State, no right, secured under the Constitution or laws of the United States, was violated by his arrest in Kentucky, and imprisonment there, upon the indictments found against him for murder in that State.

It follows that the judgment of the court below must be affirmed.

Mr. Justice **Bradley**, dissenting:

I dissent from the judgment of the court in this case. In my opinion the writ of *habeas corpus* was properly issued, and the prisoner, Mahon, should have been discharged and permitted to return to West Virginia. He was kidnapped and carried into Kentucky in plain violation of the Constitution of the United States, and is detained there in continued violation thereof. It is true, he is charged with having committed a crime in Kentucky. But [716] the Constitution provides a peaceable remedy for procuring the surrender of persons charged with crime and fleeing into another State. This provision of the Constitution has two objects: the procuring possession of the offender, and the prevention of irritation between the States, which might arise from giving asylum to each other's criminals, and from violently invading each other's territory to capture them. It clearly implies that there shall be no resort to force for this purpose. The Constitution has abrogated, and the States have surrendered, all right to obtain redress from each other by force. The Constitution was made to "establish justice" and "insure domestic tranquillity;" and to attain this end as between the States themselves, the judicial power was extended "to controversies between two or more States," and they were enjoined to deliver up to each other fugitives from justice when demanded, and even fugitives from service. This manifest care

to provide peaceable means of redress between them is utterly irreconcilable with any right to redress themselves by force and violence; and, of course, what is unconstitutional for the States is unconstitutional for their citizens. It is undoubtedly true that occasional instances of unlawful abduction of a criminal from one State to another for trial have been winked at; and it has been held to be no defense for the prisoner on his trial. Such precedents are founded on those which have arisen where a criminal has been seized in one country and forcibly taken to another for trial, in the absence of any international treaty of extradition. It is obvious that such cases stand on a very different ground. It is there a question between independent nations bound by no ties of mutual obligation on the subject, and at liberty to adopt such means of redress and retaliation as they please. But where an extradition treaty does exist, and a criminal has been delivered up under it, he cannot, without violating the treaty, be tried for any other crime but that for which he was delivered up. *U. S.* v. *Rauscher*, 119 U. S. 407 [30: 425]. This shows that, even when rightfully obtained for one offense, he cannot be prosecuted for another. It is true that in the same volume is found the [717] case of *Ker* v. *Illinois*, Id. 437 [30: 421] in which it was held not to be a good plea to an indictment, that the prisoner was kidnapped from Peru, with which country we had an extradition treaty. But this was because, as before said, the prisoner himself cannot set up the mode of his capture by way of defense, if the State from which he was abducted makes no complaint. Peru made none.

But this is not such a case. The State from which Mahon was abducted has interposed, not only by a formal demand for his restoration, but by suing out a *habeas corpus*. Perhaps the writ might have been sued out of this court, as the controversy had come to be a controversy between the States, Kentucky having availed herself of the fruits of the unlawful abduction by retaining the victim, and refusing to restore him on demand. The State of West Virginia, however, has elected, as she might do, to have the writ directed only to the person holding Mahon in custody. I take this to be a legal and apt remedy to settle the case by peaceable judicial means.

A requisition would not apply. That is provided for the extradition of fugitives from justice. It would apply for the delivery up of the kidnappers, but not for the restoration of their victim. It is a special constitutional remedy, addressed by the executive of one State to the executive of another, imposing a constitutional duty of extradition when properly made in a proper case. But the present case is a different one. It is not the surrender of a fugitive from justice which is sought, but the surrender of a citizen unconstitutionally abducted and held in custody. There must be some remedy for such a wrong. It cannot be that the States, in surrendering their right of obtaining redress by military force and reprisals, have no remedy whatever. It was suggested by counsel that the State of West Virginia might sue the State of Kentucky for damages. This suggestion could not have been seriously made. No; the remedy adopted was the proper one. *Habeas corpus* is not only the proper legal remedy, but a most salutary one. It is calculated to allay strife and irritation between the States by securing a judicial and peaceful decision of the controversy.

But it is contended that, although it may be within the spirit of the Constitution, it is not [718] within its letter, and special legislation is necessary to enable the courts or judges to issue a *habeas corpus*. I do not think that the conclusion follows. Congress, from the beginning, clothed the courts and judges of the United States with the general power to issue writs of *habeas corpus;* with the restriction, at first, not to extend to prisoners in jail, unless in custody under authority of the United States, etc. But in 1833, 1842, and 1867 this restriction was modified, and by the last Act removed altogether "in all cases where any person may be restrained of his or her liberty, in violation of the Constitution, or of any treaty or law of the United States." 14 Stat. at L. 385. Rev. Stat. sec. 753. And see *Ex parte Parks*, 93 U. S. 18, 22 [23: 787, 788], where the reference to 14 Stat. at L. should be p. 385 instead of p. 44. This is legislation enough. A citizen of West Virginia is deprived of his liberty contrary to the Constitution and laws of the United States. The exigency has arisen in which the law applies; and if the party himself is precluded from setting up his wrongful abduction as a defense to an indictment, and perhaps precluded from demanding his discharge on *habeas corpus*, his State has intervened for his protection, and has sued out the writ. But I think that his own application for the writ is well grounded. He is not in the situation of a criminal who has been abducted from a State which takes no interest in his case. His restoration has been demanded by his State; and *habeas corpus* may be issued either at his own instance or that of the State.

This court does not hesitate, on the plea of insufficient legislation, to issue the writ of *habeas corpus* as an appellate remedy wherever a citizen is deprived of his liberty in violation of the Constitution or laws of the United States, and is refused a discharge by other tribunals, and has no other remedy. See *Ex parte Royall*, 112 U. S. 181 [28: 690]; *Ex parte Royall*, 117 U. S. 241 [29: 868].

I think that the judgment of the circuit court should be reversed, and the prisoner restored to his liberty, with permission to return to the State of West Virginia.

I am authorized to say that *Mr. Justice* **Harlan** concurs in this opinion.

ERMANCE DE ST. ROMES, *Appt.*, [614]

v.

LEVEE STEAM COTTON-PRESS COMPANY.

Res judicata—*liability of corporation for issuing stock to a wrong party—prescription—uninterrupted period.*

(See S. C. Reporter's ed. 614–621.)

1. A dismissal of a suit for want of parties does not render the subject of controversy *res judicata.*

It leaves the merits unconsidered and undisposed of.

2. If a corporation has, by negligence, canceled a person's stock, and issued certificates therefor to a third party, who has purchased it from one not authorized to sell it, the true owner is not bound to pursue such purchaser, but may call directly upon the corporation to do him justice by replacing his stock or paying him for its value.

3. In an action for that purpose, the corporation cannot rely on the prescription of three years established by the Code of Louisiana in regard to possession of a movable. It seems that the prescription of ten years applies in such State, to such a case.

4. Where there has not been an uninterrupted period of ten years in which prescription could run between suits brought for the dividends in such case, the defense of prescription fails.

[No. 139.]

Argued Jan. 20, 1888. Decided May 14, 1888.

APPEAL from a decree of the Circuit Court of the United States for the Eastern District of Louisiana, dismissing a suit to compel defendant, the Levee Steam Cotton-Press Company, to issue to complainant a certificate for shares of its capital stock which were unlawfully canceled and transferred to other parties, and to recover the dividends. *Reversed.*

The facts are fully stated in the opinion.

Mr. **Charles Louque,** for appellant.

Mr. **Wm. A. Maury,** *Asst. Atty-Gen.*, for appellee.

Mr. Justice **Bradley** delivered the opinion of the court:

This is a suit in equity instituted in the court below on the 9th of December, 1882, by the appellant, as heir of her mother and brothers, against the appellee, to compel the latter to issue to the appellant a certificate for sixty-six shares of its capital stock, which are charged to have been unlawfully canceled and transferred to other parties without authority; and [615] to recover the dividends on said stock since the year 1853. The bill states that in 1845 the complainant's mother, widow de St. Romes, became the owner of said sixty-six shares of stock, and received two certificates therefor, one for forty-three shares and the other for twenty-three shares; but that on the 29th of July, 1853, the defendant, without authority from the widow de St. Romes, by mistake and in fraud of her rights, canceled said certificates, and has ever since refused to recognize her, her heirs or assigns, as the owners thereof; that in 1861 Madame de St. Romes sued the Company for the dividends accruing on said stock, and, by judgment rendered in June, 1868, recovered the dividends for 1848, 1849, 1852, and 1853; that in April, 1876, the present complainant, as owner of said shares, instituted a suit in the Superior District Court of New Orleans against the appellee, which was ended by a nonsuit in 1882. The bill then states the amount of dividends declared by the defendant since 1853, and prays relief as above stated.

The defendant, in its answer, admits that the widow de St. Romes was owner of stock from 1845 to 1853; but that she transferred the same through her agent on the 29th of July, 1853, and has never owned them since; that her agent was Pierre Deverges, who acted as her attorney in fact in the management of her business for many years, being held out by her to the community as such, with power to dispose of her property; that the stock in question was sold by Deverges, as the widow's agent and attorney in fact, to one Cohen on the day mentioned, and transferred to him on the books of the Company; and from that time Cohen and those claiming under him have been in possession of said stock, with right to all dividends; that to effect the sale of the stock the widow de St. Romes delivered her certificates of stock to her said agent, and he surrendered them to the defendant, and new certificates were issued to the purchaser. The answer further states that the books and papers of the defendant were destroyed by fire in 1859, and that its secretary, who superintended the transfers of its stock, and Deverges, have both been dead many years, and that the widow never assumed to assert any claim to the stock, until the suit brought by her in 1861; it states that Cohen sold the sixty-six shares to Peschier & Forstall, who sold them to A. & M. Heine, who transferred them to one H. Gally, the present owner, and that these persons have successively owned and possessed said stock in good faith, by just title, and received the dividends thereon to the present time. The answer sets up the prescription of three years and of ten years. It further states that in 1871 the widow de St. Romes instituted suit in the Superior District Court of the Parish of New Orleans against the defendant and the then owners of the stock, holding under said sale to Cohen, and claimed said stock and the dividends which accrued after 1854, which suit was finally decided by the Supreme Court of Louisiana in March, 1879; and, although the widow attempted, before the decision was announced, to withdraw the suit (then on appeal) on the pretense of an assignment of her interest therein to her son Eugene, in November, 1867, the court, under article 901 of the Code of Practice, refused to dismiss the case on that account, and gave judgment against the said widow de St. Romes on the ground of prescription. The answer sets up this judgment as *res judicata* in defense to the present suit. The answer further states that in April, 1876, the present complainant instituted suit against the defendant in the Superior Court for the Parish of New Orleans, claiming the shares and dividends now sued for; which suit was finally dismissed for want of proper parties; the answer claims that this decision also makes the case *res judicata*, and precludes the complainant from a recovery in this suit. Some further supplemental pleadings were filed in the case, but they need not be stated here.

The material questions are: (1) whether the matter in controversy is *res judicata;* (2) whether the suit is defective for want of proper parties; (3) whether the claim is prescribed; and (4) if none of these defenses can be maintained, whether the stock was transferred by authority of Madame de St. Romes.

The first question requires us to direct our attention to the suits that were brought against the defendant in relation to the stock and its dividends. The first suit was commenced in January, 1861, and terminated by the judgment of the Supreme Court of Louisiana in January, 1868. It was brought by Madame de St. Romes against the defendant to recover the dividends for the years 1848, 1849, 1852, 1853, and to be recognized as holder and owner of the stock

since 1853 and entitled to all dividends declared thereon since that time, with judgment for the same; or, in default of payment of said dividends, judgment for the value of the shares and interest thereon from 1853. The court gave judgment in the plaintiff's favor for the dividends of 1848, 1849, 1852, 1853, which accrued before the transfer of the stock, not being satisfied of Deverges' authority to collect them; but as the alleged transferee of the stock was not a party to the suit, it was held that the plaintiff could not be justly recognized as owner of the stock in question; nevertheless her right to claim it in a direct action was reserved.

It is clear that nothing was determined in this action with regard to the validity of the sale and transfer of the stock. Near the close of the proceedings on the 23d of November, 1867, Madame de St. Romes executed a transfer to her son Eugene de St. Romes of all her interest in the case then pending, and subrogated him to all her rights, claims and demands that might result against said Company. On June 9, 1868, this transfer was filed of record in the cause, and the money recovered in the suit was ordered to be paid to Eugene de St Romes.

On the 20th of June, 1871, the widow de St. Romes commenced a new action against the defendant, praying that she might be recognized as the owner of the stock; that the canceling of the certificates might be declared void and the transfer void, and that the defendant, the Levee Cotton-Press Company, be ordered to pay her all the dividends which had accrued on the stock since 1853, with legal interest. In pursuance of the decision of the court in the previous case she made the then holders of the stock parties defendant.

During the progress of this suit, in May, 1874, Eugene de St. Romes died intestate, leaving as his sole heirs his mother, his brother Victor, [618] and the present plaintiff, Ermance de St. Romes. In August, 1874, Victor also died intestate, leaving as his sole heirs his mother and his sister Ermance. On the 21st of October, 1874, the widow de St. Romes, the mother, renounced the succession of her sons in favor of her daughter Ermance.

The suit still went on in the name of the widow, and in November, 1874, the superior district court dismissed the plaintiff's demand, on the ground that it was prescribed. The widow appealed, and the supreme court affirmed the judgment. Quoting the Civil Code, the court said: "Shares or interests in banks and other companies of commerce or industry are considered as movables. Civ. Code, 466. Three years in good faith, except where the thing was let or stolen, gives a prescriptive title to movables. Civ. Code, 3472. Ten years, without title or good faith (Civ. Code, 3475). The defendants possessed under a title and personally in good faith for eighteen years before this suit was brought."

Before this judgment was rendered, the plaintiff wished to dismiss the bill, by reason of having parted with her interest to her son Eugene; but, under article 901 of the Code of Practice, the court refused to dismiss it. Still, as she had actually parted with her interest, the decision is not binding on her transferee or his heirs. So that this judgment also fails to make the present case *res judicata*. The decision of the court, however, is instructive in relation to the law of Louisiana, and may assist us in the further consideration of the case.

Whilst this suit was in progress, on the 1st of April, 1876, the present complainant, Ermance de St. Romes, commenced a suit against the defendant in the superior district court to recover the dividends on the sixty-six shares of stock which accrued after the year 1853 down to the commencement of the suit. She based her claim on the allegation that she was the owner of the said shares of stock by inheritance from her brother Eugene, who was transferee of her mother, etc. The supreme court, on appeal, dismissed the action for want of proper parties, holding that the persons having possession and claiming to be the owners of the stock should be made parties, because their adverse right could not be disposed of in a suit in [619] which they were not parties; that the groundwork of the plaintiff's action was the ownership of the stock; that if she was not owner of the stock she could not claim the dividends; that the examination of the ownership in the absence of those to whom the stock had been transferred, and who were in possession of it, and had regularly received the dividends, would be barren of any practical result. This judgment was rendered in 1882. But a dismissal of a suit for want of parties does not render the subject of controversy *res judicata*. It leaves the merits unconsidered and undisposed of. We are of opinion that the defense of *res judicata* cannot be sustained.

In the same year (1882) in which the last judgment was rendered by the Supreme Court of Louisiana the complainant filed her bill in the present suit, again without making the owners of the stock parties. She founds her claim, as in the former suit, upon her ownership of the stock, alleging that neither her mother nor her brothers ever authorized the transfer of it, and that the cancellation of the certificates was done by mistake, and was a fraud against the widow de St. Romes.

If the Supreme Court of Louisiana was right in dismissing the suit for want of proper parties, the present suit is obnoxious to the same objection. True, it has been developed in the pleadings, that the stock had been so often transferred and had become so blended with other stock that it could not now be identified, and the present owners could not be ascertained. But is not that a result of the long delay of the complainant and those from whom she derived her interest? The present suit was not commenced until nearly thirty years after the transfer of the stock by Deverges as attorney in fact of Madame de St. Romes. Even if prescription has been sufficiently interrupted to give the complainant a *locus standi* in court, notwithstanding the lapse of time, she may nevertheless be subject to other disadvantages resulting therefrom which cannot be cured.

But was the Louisiana court right in its conclusion as to necessary parties? If a corporation has by negligence canceled a person's stock, and issued certificates therefor to a third [620] party who has purchased it from one not authorized to sell it, is the true owner bound to pursue such purchaser, or may he directly call upon the corporation to do him right and jus-

tice by replacing his stock, or paying him for its value? The weight of authority would seem to be in favor of the latter alternative. See *Western Union Tel. Co.* v. *Davenport*, 97 U. S. 369 [24:1047]; *Loring* v. *Salisbury Mills*, 125 Mass. 138; *Pratt* v. *Taunton Copper Mfg. Co.* 123 Mass. 110; *Pennsylvania R. R. Co.'s Appeal*, 86 Pa. 80; *Loring* v. *Frue*, 104 U. S. 223 [26:713]; *Salisbury Mills* v. *Townsend*, 109 Mass. 115.

Then will the plea of prescription avail the defendant? The Supreme Court of Louisiana decided in the second suit brought by the widow (31 La. Ann. 224, 229), that three years' possession in good faith of a movable—which corporate stock is declared to be, Civil Code, 474 (466)—is sufficient to give good title. Civ. Code, 3506 (3472). But that decision was based on the theory that the owner was bound to pursue her stock against those who had obtained possession of it, and in obedience to that view she had made them parties; and it was in reference to such persons that the prescription of three years was allowed. It could not apply to the defendant, because the defendant never had possession of the stock. It was answerable for carelessly and negligently allowing the transferees to obtain possession of it. It follows that the Corporation cannot rely on the prescription of three years; but only on the prescription of one year, which is applicable to the commission of offenses and *quasi* offenses (and which was not pleaded); or on that of ten years, which is applicable to personal actions generally. Civ. Code, 3536 (3501), 3544 (3508). In *Case* v. *Citizens Bank*, 100 U. S. 446 [25:695], which was a suit to recover damages for refusal on the part of the Crescent City Bank to permit a transfer of shares on its books, *Mr. Justice* Clifford, delivering the opinion of the court, cited a number of Louisiana authorities, to show that in such a case as that the prescription of one year did not apply, but that the prescription of ten years did. The present case seems to belong to the same category. One of the cases referred to by *Justice* Clifford was that of *Percy* v. *White*, 7 Rob. (La.) 513, which [621] was a suit of stockholders against the directors of a bank for damages and losses sustained through their negligence, fraud and mismanagement of the affairs of the bank. The Supreme Court of Louisiana held this to be an action for damages *ex contractu* against mandataries, or agents. We have looked into the Louisiana Reports to some extent and have not been able to find any decisions contrary to the general tenor of those on which this court relied in *Case* v. *Citizens Bank*.

If, therefore, the defendant can only plead prescription of ten years, the question remains, whether it is available in this case; and it would seem to be clear that it is not. For though the transfer complained of took place in 1853, the widow de St. Romes brought her action in 1861, after the lapse of only eight years; and it was not terminated until 1868. The complainant commenced her action in the state court in 1876, after an interval of only eight years, and this action was not terminated until 1882. The present action was commenced in the same year. So that there has never been an uninterrupted period of ten years in which prescription could run. It follows that the defense of prescription fails. Civ. Code, art. 3518 (3484); *Riviere* v. *Spencer*, 2 Mart. O. S. 79, 83; *Badon* v. *Bahan*, 4 La. Ann. 467, 470; *Turner* v. *McMain*, 29 La. Ann. 298, 300.

The defendant's counsel feeling, no doubt, the uncertainty of the defenses referred to, dwelt with much emphasis and ingenuity upon the presumptive proofs of the transfer of the stock being made by Deverges with the knowledge and authority of Madame de St. Romes. It is unnecessary to say more on this subject than that the proofs referred to fail to satisfy us that any authority was given, or that the transfer was acquiesced in. The Supreme Court of Louisiana entertained the same opinion in the case brought in 1861, and very clearly expressed it, although they made no decision on the subject in consequence of what they considered a want of proper parties.

The decree of the Circuit Court is reversed and the cause remanded, with instructions to take further proceedings in conformity with this opinion.

ZENAS C. ROBBINS, *Appt.*, [622]
v.
CLARENCE H. CLARK ET AL., Extr. and Trustees of EDWARD A. ROLLINS, Deceased.

CLARENCE H. CLARK ET AL., *Appts.*,
v.
ZENAS C. ROBBINS.

(See S. C. "*Robbins* v *Rollins*," Reporter's ed. 622-633.)

Decision on the facts—subrogation—interpolated stipulation.

1. In an action to recover a certain sum of money, and, on the failure to pay the same, to have certain property, of which the plaintiff claims to be mortgagee in possession, sold to satisfy said claim, —*Held*, that the court below, on the facts of the case, was in error in allowing the complainant's claim for the payment of the two mortgages or deeds of trust mentioned in the opinion, and subrogating him to the rights of the mortgagee.

2. *Held* further, that the deed of subrogation from the Mutual Benefit Life Insurance Company to the German-American Savings Bank was unauthorized and should be declared void.

3. This court cannot interpolate a stipulation into a contract, which is not implied by anything that appears on the face of the contract, and where the surrounding circumstances do not authorize or require a construction of the contract that would import such a stipulation into it.

[Nos. 237, 861.]

Argued April 18, 19, 1888. Decided May 14, 1888.

CROSS appeals from a decree of the Supreme Court of the District of Columbia, subrogating complainant to the lien under certain mortgages or deeds of trust and adjudging a sale of the property in default of payment of a certain sum, and for other relief. *Reversed.*

The facts are fully stated in the opinion.

Messrs. **John Selden** and **George F. Edmunds**, for Zenas C. Robbins:

The written contract merged all previous negotiations, and is presumed in law to express the final understanding of the parties.

Brawley v. *U. S.* 96 U. S. 173 (24:624); *Potomac Steamboat Co.* v. *Upper Potomac Steamboat*

Co. 109 U. S. 680 (27:1073); *Van Ness* v. *Mayor, etc. of Washington*, 29 U. S. 4 Pet. 285 (7: 860).

No one can be subrogated to the benefit of a security which he has undertaken, for value, to discharge.

Sheld. Subr. §§ 24, 25, 46–47; *Reynolds* v. *Crawfordsville First Nat. Bank*, 112 U. S. 405, 413 (28:733, 736); *Richardson* v. *Traver*, Id. 423, 432 (28:804, 807).

Payment of an incumbrance by one whose duty it is to pay extinguishes it.

Herr v. *Barber*, 2 Mackey, 554; *Factor's & T. Ins. Co.* v. *Murphy*, 111 U. S. 744 (28:534); 4 Kent, Com. 102, 193; *Carpenter* v. *Longan*, 83 U. S. 16 Wall. 275 (21:315).

Messrs. **H. H. Wells** and **S. Shellabarger**, for Rollins' representatives:

It is necessary for the court to declare what is the true meaning and intention of the contract.

Merriam v. *U. S.* 107 U. S. 437 (27:531), citing many cases; *Mobile & M. R. Co.* v. *Jurey*, 111 U. S. 584 (28:527); *Nash* v. *Towne*, 72 U. S. 5 Wall. 689 (18:527).

Subrogation is the creature of justice and equity.

Clevinger v. *Miller*, 27 Gratt. 740; *Chicago* v. *Sheldon*, 76 U. S. 9 Wall. 50 (19:594).

This right of subrogation is not defeated by the fact that the person, on whose request the payment is made, had in fact no title.

Sheld. Subr. 38, and cases there cited; *Valle* v. *Fleming*, 29 Mo. 152; *Williams* v. *Williams*, 2 Dev. Eq. 69; *Richardson* v. *Traver*, 112 U. S. 423 (28:804).

The law conclusively implies interest on liquidated debts due.

U. S. v. *McKee*, 91 U. S. 451 (23:327); *Selleck* v. *French*, 1 Conn. 32; *Reid* v. *Rensselaer Glass Factory*, 3 Cow. 387; *S. C.* Id. 393; *Dodge* v. *Perkins*, 9 Pick. 368; 3 Pars. Cont. side p. 102.

Mr. Justice **Bradley** delivered the opinion of the court:

The bill in this case was filed on the 25th of October, 1883, by Edward A. Rollins, of Philadelphia, against Zenas C. Robbins, of the City of Washington, to recover $122,000, with interest, and, on the failure of Robbins to pay the same, to have certain property in Washington, of which Rollins claims to be mortgagee in possession, sold to satisfy said claim. Rollins, the complainant, claims title to the matter in suit, by purchase in November, 1880, from one Keyser, the receiver of the German-American Bank; and said bank derived title from the German-American Savings Bank of Washington by purchase in October, 1877; and the latter acquired their principal interest in the matter from John Hitz, William F. Mattingly, and Charles E. Prentiss by deeds dated in May and June, 1875—the said Hitz, Mattingly, and Prentiss having procured the said interest for the said savings bank in the manner hereafter mentioned. The transactions out of which the controversy took its rise were as follows: [623]

In 1873, the defendant Zenas C. Robbins was in possession of the property known as the Federal Building, situated on the southeast corner of 7th Street and F Street northwest, in the City of Washington, immediately opposite the Postoffice Department Building, being one hundred feet on 7th Street and 129 feet 3½ inches on F Street. Part of this property, namely, the one hundred feet front on 7th Street, and forty feet deep on F Street, he owned in fee simple; the rest of it, 89 feet 3½ inches on F Street, and 100 feet deep, lying immediately in rear of the first part, he held by leases, with contracts giving him the privilege of purchasing the fee at any time during the continuance of the leases. This leasehold portion was divided into four lots fronting on F Street, and each running back from F Street one hundred feet in depth, and he had a separate lease and contract for privilege of purchase on each; the rent of each being $60 per month, amounting to $2,880 per annum for all four lots; and the purchase prices, at which he had the privilege of purchasing the lots, were respectively $8,000, $12,000, $12,000, and $10,000—the whole amounting to $42,000. The lot owned by Robbins in fee, fronting on 7th and F Streets, was incumbered by two mortgages, or deeds of trust in the nature of mortgages, one for $10,000 held by one Daniel Low, and the other for $25,000 held by the Mutual Benefit Life Insurance Company of New Jersey. There was also a judgment lien of $10,500 on the leasehold property.

In or about August, 1873, the Board of Public Works of the City of Washington cut down the grade of the streets around Mr. Robbins's corner several feet, and rendered the buildings on his property somewhat insecure; the board, pretending that they were in danger of falling, in October, 1873, ordered them to be taken down and removed. Robbins remonstrated, and some arrangement was made for strengthening them. Robbins claimed damages against the city for the injury done to his property, and an award of $4,098 was afterwards made and paid to the bank, after it came into possession of the property as hereafter mentioned. [624]

On the 10th of September, 1873, Hitz, the president of the German-American Savings Bank, and in its interest, made a contract with Robbins to purchase the whole property, of which the following is a copy:

"WASHINGTON, D. C., *September* 10, 1873.

"Agreement between Zenas C. Robbins and John Hitz, both of the City of Washington, District of Columbia.

"The said Robbins does hereby agree to sell unto the said Hitz, his heirs or assigns, the real estate at the northwest corner of square numbered four hundred and fifty-six (456) in the City of Washington, D. C., for the sum of one hundred and seventy thousand dollars, said property fronting one hundred (100) feet on 7th Street and one hundred and twenty-nine (129) feet four and one half (4½) inches, more or less, on F Street. Forty (40) feet on F Street, at the corner of 7th Street, by one hundred (100) feet, more or less, in depth, is owned by said Robbins in fee. Twenty (20) feet on F Street, by one hundred (100) feet in depth, more or less, is a leasehold, with privilege of purchase for $10,000.00. Twenty-three (23) feet on F Street by one hundred (100) feet in depth, more or less, is a leasehold, with like privilege for $8,000. Twenty-three (23) feet on F Street by like depth is leasehold, with like privilege for $12,000. Twenty-three (23) feet four and one half (4½) inches on F Street by like depth is

leasehold, with like privilege for $12,000. Said sale is to date as October 1, 1873.

"All taxes upon said property are to be paid by said Robbins, including the taxes for the year ending June 30, 1873, and all rents up to October 1, 1873, are to be received by him, provided none of said rents are payable in advance. All rents due on said leasehold property up to said October 1, and all interest on incumbrances, are to be paid by said Robbins.

625] "All rents subsequent to said October 1 are to be received by said Hitz; said Hitz is to assume the incumbrances on said property, viz:

Deed of trust to Daniel Low	$10,000 00
" " Mutual Benefit Life Ins. Co., Newark, N. J.	25,000 00
Purchase money under Larner lease	10,000 00
" " " Gideon "	8,000 00
" " " Shanks "	12,000 00
" " " lease from executors of Jacob Gideon	12,000 00
	$77,000 00
And the balance in cash or its equivalent	93,000 00
	$170,000 00

"Any other incumbrances are to be paid by said Robbins, and the conveyance to said Hitz is to be free from any dower right in the wife of said Robbins.

"The purchase by said Hitz is conditional on his approval of the title to said property and the increase by the German-American Savings Bank of its capital stock according to law.

"Z. C. ROBBINS. [SEAL.]
"JOHN HITZ. [SEAL.]"

Robbins in his testimony says that immediately after signing this contract he went to Virginia to visit some friends, and did not return until the first of November, 1873. He says that he then found the bank in possession of all the property, and proceeds as follows:

"A few days after my return from Virginia Mr. Hitz came to me and made me this proposition: He said that if I preferred to change the sale into a lease of the property perhaps we could make a new negotiation, and he made this proposition—that he and his associates, Mr. Mattingly and Mr. Prentiss, would take the property on a ten years' lease; would pay the purchase money under the four leases; would
626] pay the incumbrances of record, amounting to $35,000; would pay me $600 a month during the term of the lease; pay all the taxes that might be assessed on the fee-simple property and leasehold estates, and would relieve me of all care and responsibility, expense, and charges of every name, nature, and description relating to the fee-simple and the leasehold estates during the whole term of the lease, provided I would embody in the lease the privilege of the purchase of my fee-simple property by the lessees for the sum of $93,000 at any time during the term of the lease. Another provision of the contract was, he gave me the option of a conveyance of the four leasehold estates by paying the several amounts of purchase money named in the leases, with eight per cent interest from the date of payment."

Thereupon the first agreement was abandoned, and the following agreement and lease, upon which the present rights and obligations of the parties depend, was entered into. We set it out at large, because it is the foundation of the whole controversy in the present suit, and almost every part of it is important in settling the rights of the litigants:

"This Indenture, made this 25th day of October, A. D. 1873, by and between Zenas C. Robbins, of the first part, and John Hitz, William F. Mattingly, and Charles E. Prentiss, of the second part, all of the City of Washington, District of Columbia.

"Whereas, the said party of the first part is seised in fee simple of all that certain parcel of land in square numbered four hundred and fifty-six (456), in the City of Washington, D. C., contained within the following metes and bounds: Beginning for the same at the northwest corner of said square and running thence east along the line of F Street forty (40) feet, and running south with this width one hundred (100) feet, it being the same that was conveyed to the said party of the first part by George S. and Juliana Gideon, executors of Jacob Gideon, deceased, by deed dated July 21, 1869, and recorded in Liber D, No. 10, folio 288 *et seq.*, of the land records of the District of Columbia;

"And whereas, the said party of the first part has a leasehold interest in a certain part of [627] lot numbered fourteen (14) in said square, particularly described in a certain indenture of lease from George S. Gideon, trustee for Catharine C. Gideon, to the said party of the first part, dated November 30, 1864, and duly recorded in Liber N, C. T., No. 52, folio 101 *et seq.*, of said land records, with the privilege of purchasing said property in fee simple for the sum of eight thousand ($8,000) dollars, and has also a leasehold interest in a certain other part of said lot numbered fourteen (14), particularly described in a certain indenture of lease from Catharine N. Shanke and John Hitz and wife to the said party of the first part, dated May 31, 1865, and duly recorded in Liber N, C. T., No. 57, folio 456, of said land records, with the privilege of purchasing said property in fee simple for the sum of twelve thousand (12,000) dollars; and has also a leasehold interest in a certain other portion of said lot fourteen (14) and a part of lot numbered fifteen (15) in said square, particularly described in a certain indenture of lease from George S. and Juliana Gideon, executors of Jacob Gideon, deceased, to the said party of the first part, dated May 31, 1865, and duly recorded in Liber N, C. T., No. 59, folio 128 *et seq.*, of said land records, with the privilege of purchasing said property in fee simple for the sum of twelve thousand ($12,000) dollars; and has also a leasehold interest in a certain part of lot numbered thirteen (13) in said square, particularly described in a certain indenture of lease from George S. Gideon, trustee for Christiana Larner, to the said party of the first part, dated November 30, 1864, and recorded in Liber N, C. T., No. 52, folio 106 *et seq.*, of said land records, with the privilege of purchasing said property in fee simple for the sum of ten thousand ($10,000) dollars, the whole of said property, fee simple, and leasehold interests, having a front on 7th Street west in said square of one hundred (100) feet and on F Street north of one hundred and twenty-nine (129) feet three and one half (3½) inches:

"*Now, therefore, this indenture witnesseth:* That the said party of the first part, for and in consideration of the rents, covenants, and agreements hereinafter reserved and contained to be paid down and performed by the said parties [628] of the second part and the survivor of them, his heirs, executors, administrators or assigns, does hereby assign, transfer, and set over unto the said parties of the second part and the survivors and survivor of them, his executors, administrators, and assigns, all said leasehold interests in said several parcels of land and said leases, and the unexpired portion of said several terms, together with all the rights and privileges and subject to the obligations in said several leases contained, and does also hereby demise, lease, and to farm let unto the said parties of the second part and the survivors and survivor of them, his executors, administrators, and their and his assigns, all of said parcels of land so held in fee simple as aforesaid by the said party of the first part for the term of ten years from and after the first day of November, A. D. 1873, and thence next ensuing, and fully to be complete and ended, they and he yielding and paying unto the said party of the first part, his heirs and assigns, the sum of six hundred (600) dollars per month on the first day of each and every month during the said term, and observing and performing all and singular the covenants and agreements set forth in these presents on their and his part to be observed and performed; and the said parties of the second part, for themselves and each of their heirs, executors, and administrators, do hereby covenant with the said party of the first part, his heirs and assigns, in manner following, to wit: That they, the said parties of the second part, and the survivors and the survivor of them, his heirs, executors, and administrators and their and his assigns, shall and will pay or cause to be paid said monthly rent as herein above stipulated, and shall and will pay and cause to be paid the incumbrances of record against said property, or any portion thereof, the same being two deeds of trust of twenty-five thousand and ten thousand dollars respectively, and shall and will exercise the said several privileges of purchasing in fee simple granted in said leases by paying or causing to be paid said several amounts of purchase money as provided in said leases, and shall and will pay or cause to be paid all taxes and assessments hereafter levied or imposed upon said property or any portion thereof; and [629] the said party of the first part, for himself, his heirs, executors, administrators and assigns, does hereby covenant with the said parties of the second part and the survivors and survivor of them, his heirs, executors, administrators, and their and his assigns, that he, the said party of the first part, his heirs or assigns, shall and will, at any time within said term of ten years, convey unto the said parties of the second part and the survivors and survivor of them and his heirs and their or his assigns, in fee simple, said parcels of land so held in fee simple as aforesaid by the said party of the first part, free and discharged from all right of dower on the part of the wife of the said party of the first part, on the payment to him, the said party of the first part, or his heirs, executors, administrators or assigns, of the sum of ninety-three thousand dollars; and, further, that he, the said party of the first part, has full and lawful right to execute these presents, and that he, his heirs, executors, administrators and assigns, will at any and all times hereafter, when requested so to do, execute and deliver any other or further assurance in law to the said parties of the second part and the survivors and survivor of them, his heirs, executors and administrators, and their and his assigns, which their or his counsel learned in the law may advise, devise or require; and it is hereby mutually understood and agreed by and between the parties hereto as follows, viz.: The said party of the first part or those claiming under or through him shall pay all taxes and assessments against or upon said property or any portion thereof up to November 1, 1873, including the *pro rata* of taxes to this date for the year ending June 30, 1874, and shall also pay or cause to be paid interest on said incumbrances amounting to $35,000 up to said first day of November, and also all rents in leasehold interests to said November 1, and shall also pay or cause to be paid any and all other incumbrances that may be upon or against said property or any part thereof. Should the said parties of the second part or those claiming under or through them be compelled to pay any sum or sums of money which under these presents ought or should be paid by the said party of the first part or those claiming under him, then the same, with interest at the rate of eight per cent per annum from the date or dates of pay [630] ment, shall be a lien upon said property. Should any one of the buildings on said parcels of land or a material portion thereof fall, either from its present condition or in attempting repairs upon the same, then, at the option of the said parties of the second part or those claiming under or through them, this indenture shall be held null and void, and any moneys expended shall be a lien upon said property and be refunded by the said party of the first part and those claiming under or through him, with interest as aforesaid. Should the said parties of the second part or those claiming under or through them fail to exercise said privileges of purchasing the said fee-simple interest in said property so held by said Robbins, within said term of ten years from November 1, 1873, then the said party of the first part, his heirs or assigns, shall be entitled to a conveyance of all of said property by refunding, within one year from the expiration of said term of ten years, all sums of money paid by the said parties of the second part or those claiming under them, with interest at the rate of eight per centum per annum, in the purchase of the fee simple or any portion of said property and in relieving the same of incumbrances created by the said party of the first part. The said parties of the second part and those claiming under or through them shall have the right and privilege of tearing down, altering or repairing any and all of the buildings on said premises, and of rebuilding or repairing, as they may deem proper. Should the German-American Savings Bank of the City of Washington increase its capital stock for the purpose of purchasing said property, then the said party of the first part is to have the privilege

of subscribing for the same to the amount of twenty thousand dollars, upon the same terms as other subscribers.

"In testimony whereof the said parties of the first and second parts have hereunto set their hands and affixed their seals on the day and year first hereinbefore written.

"(Signed) "Z. C. ROBBINS.
"JOHN HITZ.
"WM. F. MATTINGLY.
"C. E. PRENTISS."

[631] If we analyze this document, we find that, like the first agreement, it treats of the entire property, freehold as well as leasehold, and instead of providing for an absolute sale, transfers the leases of the leasehold, with privilege of purchase, and leases the fee-simple part, with like privilege of purchase; the consideration, as before, being the same amount, $170,000; namely, $93,000 for the lot held by Robbins in fee simple, $35,000 to be paid to clear off the mortgages, and $42,000 to be paid to the owners of the four leasehold lots.

Looking at the agreement in parts, we find:

1. Robbins, for and in consideration of the rents, covenants, and agreements to be paid and performed by the parties of the second part, assigns to them the leases of the four leasehold lots, with all the rights and privileges conferred thereby; and leases to them the lot held by him in fee simple for the term of ten years, at a rent of $600 per month.

2. The parties of the second part, on their side, covenant and agree to pay the said monthly rent above stipulated, and the incumbrances of record against the said property, or any portion thereof, specifying the two deeds of trust for $10,000 and $25,000; and further agree, that they will exercise the several privileges of purchasing in fee simple the leasehold lots by paying the several amounts provided in the leases, namely, [amounting in the aggregate to $42,000]; and further, to pay all taxes and assessments to be levied on the property or any portion thereof.

Suppose the paper had ended here, could there have been a doubt that the payments to be made by the parties of the second part, namely, the reserved rent, the $35,000 for clearing off the mortgages, and the $42,000 for buying in the fee (for themselves) of the leasehold property, constituted the consideration of the lease and assignment made to them by Robbins in the first clause? The parties evidently regarded the privilege of purchasing the four leased lots on F Street for $42,000 as a valuable one. It does not seem at all improbable that Robbins should demand, and that the parties of the second part should be willing to give, $35,000 (the amount of his mortgages) for this [632] privilege. This would make the four lots cost them $77,000. If Robbins's 4,000 square feet on 7th Street were worth $93,000 it is not unreasonable to suppose the 8,900 square feet fronting on F Street, and lying in the rear of the other, and almost necessary to it, should be worth $77,000. The remaining parts of the agreement are not in conflict with the construction suggested. In the next place,

3. Robbins gives to the parties of the second part the privilege of purchasing his fee-simple lot at any time during the ten years' lease for the sum of $93,000.

4. The agreement then provides that Robbins shall pay all interest, rents, taxes, and assessments up to the 1st of November, 1873; and it was further agreed, that if the second party should have to pay any sums of money which Robbins, under the agreement, ought to pay, they should be a lien on the property.

5. It was provided that if any of the buildings should fall in repairing, etc., the second party should be released from the contract and refunded the amounts paid by them.

6. It was agreed that if the second party should not exercise their option of buying Robbins's fee-simple property, he should for one year after the expiration of the ten years' term have the privilege of buying them out by refunding all payments they might have made.

Now, none of these provisional exigencies took place. The parties of the second part did not exercise their option of buying Robbins's fee-simple property; nor did he exercise his option of buying them out; and the buildings never fell. In all other respects both parties performed their respective parts of the agreement; Robbins paid all interest, taxes, rents, etc., up to November 1, 1873, and paid off the $10,500 judgment lien on the leasehold property; and the parties of the second part and their successors in interest, the German-American Savings Bank and the German-American National Bank, paid the rent of $600 per month, paid off the two mortgages or deeds of trust, amounting together to $35,000, and all interest thereon, paid the rents of the leasehold lots, and bought in the fee simple thereof from the owners, at the stipulated amount of $42,000. So that, at the close of the transaction, the parties stood as follows: Robbins owned his old [633] fee-simple lot on the corner of 7th and F Streets, and the complainant, who purchased the interest of the other parties, owned the four lots on F Street.

This is the whole case; and we can hardly entertain a doubt respecting the rights of the parties. We think that the court below was in error in sustaining and allowing against Robbins the complainant's claim for the payment of the two mortgages or deeds of trust, and subrogating him to the rights of the mortgagees, Low and the Mutual Benefit Life Insurance Company. The deed of subrogation from the latter company to the German-American Savings Bank was entirely wrong and unauthorized, and should be vacated and declared void. Had a cross bill been filed for that purpose, it should have been so decreed. Remedy can be had by an original bill.

The contract contains no stipulation whatever that the parties of the second part were in any event to have a return of the $35,000 paid in lifting the two mortgages, except in the event of Robbins availing himself of his option to have a conveyance of the whole property—an event which never took place. We cannot interpolate such a stipulation. It is not implied by anything that appears on the face of the contract; nor does anything in the surrounding circumstances authorize or require a construction of the contract that would import such a stipulation into it. The first agreement made with Hitz seems to us to have an entirely opposite effect.

On all the other points raised in the case, we

think that the views of the court below were correct.

The decision is reversed and the cause remanded, with directions to dismiss the bill of complaint with costs.

---

[634] JOHN CALHOUN, Receiver of the Consolidated Association of the Planters of Louisiana, ET AL., *Plffs. in Err.*,

v.

GEORGE ALFRED LANAUX.

(See S. C. Reporter's ed. 634-640.)

Jurisdiction of state court.

A state court has jurisdiction to entertain a suit against an association to compel the cancellation of a mortgage which has been paid, although the Circuit Court of the United States had appointed a receiver of such association, such suit not interfering in any way with the possession of the receiver.

[No. 289.]

Submitted April 19, 1888. Decided May 14, 1888.

IN ERROR to the Supreme Court of the State of Louisiana, to review a judgment reversing a judgment of the State Civil District Court, and granting a mandamus commanding the recorder to cancel a mortgage on real estate in New Orleans. *Affirmed.*

Reported below in 36 La. Ann. 974.

The facts are fully stated in the opinion.

Messrs. **Joseph P. Hornor** and *Francis W. Baker*, for plaintiffs in error:

A right, title, privilege and immunity was claimed under the Constitution and laws of the United States, and in its decision the Supreme Court of Louisiana directly passed upon this point.

Buck v. *Colbath*, 70 U. S. 3 Wall. 340 (18: 260); *Clements* v. *Berry*, 52 U. S. 11 How. 408 (13:749); *Sharpe* v. *Doyle*, 102 U. S. 686 (26: 277); *Feibelman* v. *Packard*, 109 U. S. 421 (27: 984); *Minnesota* v. *Batchelder*, 68 U. S. 1 Wall. 109 (17:551); *Ableman* v. *Booth*, 62 U. S. 21 How. 514, 524 (15:172, 176).

Mr. **B. F. Jonas**, for defendant in error:

The person who goes into the state court, submits to its jurisdiction, and nowhere asserts in any way the rights of the federal courts in the matter, cannot, after taking his chance for a decision in his favor, and getting one against him, raise in this court the point of want of jurisdiction in the state court.

Mays v. *Fritton*, 87 U. S. 20 Wall. 414 (22: 389); *National Bank of the Metropolis* v. *Kennedy*, 84 U. S. 17 Wall. 19 (21:554); *The Victory* v. *Boylan*, 73 U. S. 6 Wall. 382 (18:848); *Hamilton Mfg. Co.* v. *Massachusetts*, Id. 632 (18:904); *Grand Gulf R. R. & Bkg. Co.* v. *Marshall*, 53 U. S. 12 How. 165 (13:938); *Smith* v. *Maryland*, 59 U. S. 18 How. 71 (15:269); *Caperton* v. *Bowyer*, 81 U. S. 14 Wall. 216 (20:882); *Worthy* v. *Moore County*, 76 U. S. 9 Wall. 611 (19:565); *Salomon* v. *Graham*, 82 U. S. 15 Wall. 208 (21: 57); *Steines* v. *Franklin County*, 81 U. S. 14 Wall. 15 (20:846).

A question presented in the subordinate tribunal will not give jurisdiction unless it is also presented in the appellate tribunal.

Caperton v. *Bowyer, supra; State* v. *Louisiana Board of Liquidation*, 98 U. S. 140 (25:114); *Ocean Ins. Co.* v. *Polleys*, 38 U. S. 13 Pet. 157 (10:105); *Mississippi & M. R. R. Co.* v. *Rock*, 71 U. S. 4 Wall. 177 (18:881); *Commercial Bank* v. *Buckingham*, 46 U. S. 5 How. 317 (12:169).

This court has no jurisdiction to review the decision of a state court against a right and title under a statute of the United States, unless such right and title be specially set up and claimed by the party for himself, and not for a third party under whom he does not claim.

Long v. *Converse*, 91 U. S. 105 (23:233).

Mr. Justice **Bradley** delivered the opinion of the court:

This case arose upon a petition filed in the Civil District Court for the Parish of Orleans, January 23, 1884, by Lanaux, the defendant in error, praying for a mandamus against Eugene May, the recorder of mortgages for the same parish, commanding him to cancel and erase from the books of his office all inscriptions [635] against certain property of the petitioner in favor of the Consolidated Association of the Planters of Louisiana, particularly certain inscriptions designated in the petition as being those of a mortgage on three certain lots in New Orleans, dated June 6, 1848, given to secure the payment of a subscription for fifteen shares of the capital stock of the company, of $500 each. The State of Louisiana, through its attorney-general, the Consolidated Association of the Planters of Louisiana, through its liquidators, and Henry Denis and others, holders of bonds of the State, secured by pledge of the mortgage above mentioned, were made parties to the proceeding. The interest of the collateral parties arose in this way: The mortgage was originally given by one Lebau to secure the payment of his subscription for the fifteen shares of stock, and, with the like mortgages of other subscribers, and the other assets of the corporation, was pledged by the company to the State, as security for paying certain bonds, issued by the State in favor and aid of the company. Hence the interest of the State. The other parties were holders of these bonds of the State, and claimed to be subrogated to its rights. The petitioner alleged that by an Act of the Legislature of Louisiana, passed in 1847, and by the action of the liquidators of the company (which had become insolvent), the stockholders were called upon to contribute $102 per share, as a fund to meet the obligations of the State, payable in yearly installments of $6 each for the period of seventeen years; and that all these installments had been paid on the fifteen shares secured by the mortgage in question. The petitioner further stated that in the case of *The Association* v. *Lord*, 35 La. Ann. 425, one of the stockholders *in consimili casu*, the Supreme Court of Louisiana had decided that the payment of the said installments discharged the obligations of the stockholders both as to the subscription and mortgage. He further stated that the mortgage kept his lots out of commerce, and that he had no adequate relief except by mandamus to the recorder.

Prior to the filing of this petition, the Circuit Court of the United States for the Eastern District of Louisiana had appointed receivers [636] of the said Consolidated Association of Plant-

ers, and a copy of the petition was served on them.

The Attorney-General of Louisiana appeared and filed an exception to the proceeding by mandamus, claiming that the petitioner could only have relief by a plenary suit, *via ordinaria;* and that it was, in fact, a suit against the State, which could not lie without its consent, and that the State declined to be made a party to the proceeding.

The recorder of mortgages appeared, and contended that he could not be required to cancel the inscription of the mortgages until it had been judicially declared that they were not valid and existing securities, by proceedings *via ordinaria* by way of citation contradictorily had with the parties claiming the benefit of the mortgages.

The holders of the state bonds, Denis and others, appeared, and denied the allegations of the petition, and pleaded that the court had no jurisdiction of the demand of the relator, because receivers had been appointed to the Consolidated Association of Planters by the Circuit Court of the United States, and that court only could entertain jurisdiction of the matter.

The receivers of the association, appointed by the circuit court, did not appear, and offered no objection to the proceeding.

The cause was tried and the civil district court, for some reason not shown, dismissed the petition. The case was then appealed to the Supreme Court of Louisiana, which, on the first hearing, affirmed the judgment; but, on a rehearing, reversed it and granted a mandamus as prayed.

On the question of jurisdiction raised by the plea of the bondholders, the court said: "The point made that this court is without jurisdiction because receivers have been appointed for the Consolidated Association by the United States Circuit Court is untenable, when the object of the proceeding is to erase from the mortgage book of the State an incumbrance created by the law, and which the Circuit Court of the United States would have no authority to order."

As this presents the only federal question
637] raised in the case, we have no occasion to consider any other. If the state court had jurisdiction of the proceedings, its judgment cannot be impeached on the present writ of error, for that is the only objection made to it on federal grounds. The objection is that the court has no jurisdiction because the United States Court had appointed receivers of the association. The simple fact that the said court had appointed such receivers is the only fact disclosed in the record, so far as the proceedings in the Circuit Court of the United States are concerned, until after final judgment had been rendered in the Supreme Court of Louisiana; and this fact only appeared by the statement of the defendants Forstall and Denis in their answer. After final judgment of the supreme court was rendered, John Calhoun, who had become sole receiver, together with Denis, one of the state bondholders, presented to the supreme court a petition for an order to call on the other defendants to join them in an application for a writ of error in this court, and if they refused, then that such writ be allowed to the petitioners alone. To this petition was annexed a copy of an order of the circuit court, made December 29, 1883, in a cause in which William Cressey was complainant and the Consolidated Association of Planters were defendants, for an injunction and the appointment of receivers, enjoining the defendants from disposing of the association's assets or property; and appointing John Calhoun, T. J. Burke and George W. Nott as receivers in the cause, and directing them forthwith to take possession of all the property and assets of the said association and proceed to administer the same under the direction of the court, and collect all accounts due said association, and all parties having possession of assets, securities, books, papers, vouchers or effects of said association be ordered to deliver up the same to said receivers, and that said receivers be vested with all the rights and powers of receivers in equity in this cause.

A subsequent order, a copy of which was also annexed to the petition for writ of error, continued Calhoun and Burke as receivers, and specified more minutely their powers and duties, not materially differing from the above. By another order, made in June, 1884, a copy of which was also annexed to the petition, [638] Burke was relieved and Calhoun was continued as sole receiver.

The other defendants having declined to join in the writ of error, the court made the following order on the application for writ of error:

"*Order.*

"The exceptions filed by Forstall's Sons and Denis to the jurisdiction of the district court were filed after the general issue had been pleaded. They do not appear to have been urged in the lower court, as no evidence was offered to show jurisdiction in the Fifth Circuit Court, Eastern District of Louisiana, and were not passed upon, as the judgment of the lower court dismissed the application on a question of proceeding. On appeal no allusion was made to them, and no action of the appellate court was asked on them.

"The acceptors have taken a chance for a decision in their favor on the merits. After getting one against them they cannot be allowed the relief now sought. *Mays* v. *Fritton*, 87 U. S. 20 Wall. 414 [22: 389].

"The application for the writ is refused.

"New Orleans, March 26, 1885.

"E. BERMUDEZ, *Chief Justice.*"

We think that copies of the orders made by the circuit court, which were annexed to the petition for a writ of error, were produced in the case altogether too late to constitute any ground for importing a federal question into the cause, although we do not perceive that it would have made any difference in the result if they had been presented regularly in the court of first instance.

Taking the case, then, as it stood when the final decision of the Supreme Court of Louisiana was made, we have simply to decide whether the single fact that the circuit court had appointed receivers of the association deprived the state court of all jurisdiction of the petition for mandamus. We have seen that the Supreme Court of Louisiana decided that it did not, and we have seen the reason why they

[639] supposed it did not, namely, that the circuit court had no authority to order an erasure of a mortgage on the records of the State.

We should hesitate to concur with the state court in the opinion that the Circuit Court of the United States would have no authority to order the erasure of an incumbrance from the mortgage book of the State. The courts of the United States, in cases over which they have jurisdiction, have just as much power to effectuate justice between the parties as the state courts have. But we do not suppose that the jurisdiction of the state court in the present case depends on the incapacity of the circuit court to afford relief; but on its own inherent powers, and the fact that such jurisdiction has not been taken away by the proceedings in the federal court. We held in a number of cases, that the jurisdiction of the state courts over controversies between parties, one of whom was proceeded against under the late national bankrupt law, was not taken away by the bankruptcy proceedings; although a suit against the bankrupt might be suspended by order of the bankruptcy court until he obtained or was refused a discharge. See *Eyster* v. *Gaff*, 91 U. S. 521 [23:403]; *Claflin* v. *Houseman*, 93 U. S. 130 [23:833]; *Mays* v. *Fritton*, 87 U. S. 20 Wall. 414 [22:389]; *McHenry* v. *La Société Francaise*, 95 U. S. 58 [24:370]. In the case of *Bank of Bethel* v. *Pahquioque Bank*, 81 U. S. 14 Wall. 383 [20:840], we decided that suit might be brought in a state court against a national bank, although it had made default in paying its circulating notes, and a receiver of the bank had been appointed by the Comptroller of the Currency. *A fortiori*, a company may be sued whose assets have been placed in the hands of a receiver in an ordinary suit in chancery.

It is objected, however, that no action can be commenced against receivers without permission of the court which appointed them; and reference is made to *Barton* v. *Barbour*, 104 U. S. 128 [26:674], and *Davis* v. *Gray*, 83 U. S. 16 Wall. 203 [21:447]. This is not an action against the receivers, but against the Consolidated Association and the recorder of mortgages. The receivers were notified of the proceeding by being served with a copy of the petition, so as to give them an opportunity of objecting if they saw fit to do so. They did not appear, and [640] made no objections. The state bondholders were made parties, and they did appear. We are not concerned, however, with the proceedings, or the merits of the case, but only with the question of the jurisdiction of the court. Of this we have no doubt. Perhaps the circuit court, on application of the receivers, might have interfered to prevent the petitioner from proceeding in the state court, had they thought proper to make such an application; but they did nothing of the kind.

This was not the case of a proceeding in the state court to deprive the receivers of property in their possession as such. That would have been a different thing, and the state court would not have had jurisdiction for such a purpose. This was only a case for enforcing the right of the petitioner to have canceled on the books of the recorder a mortgage which had been satisfied and paid,—not interfering in any way with the possession of the receiver.

We are satisfied that the state court had jurisdiction of the case, and the judgment of the Supreme Court is affirmed.

J. HAIRISTON SEWALL ET AL., *Plffs. in Err.*, [719]

v.

JACOB M. HAYMAKER.

(See S. C. Reporter's ed. 719-730.)

Virginia law as to deed of wife—death of wife—assent of husband—descent to heirs—Ohio Law.

1. The acknowledgment and recording of conveyances by husband and wife, of lands in Virginia, in the mode described by the laws of that State, is essential to pass the estate of the wife in such land.
2. A deed of lands signed and acknowledged by a wife in Virginia, but not acknowledged by her husband prior to her death, became, upon her death, so far as the laws of Virginia are concerned, inoperative as a conveyance of her interest in the lands.
3. Until the husband acknowledged it, and thereby, in the only way prescribed by statute, gave his assent to her conveying away her interest, the deed was ineffectual; and such assent was of no avail after her death.
4. The land, in such case, passed to the heirs of the wife; and their title could not be devested by any subsequent act of the husband.
5. Under both the Ohio and Virginia Statutes, a deed by the husband and wife, conveying the latter's land, is inoperative to pass her title, unless the husband (she having duly acknowledged the deed) did, in her lifetime and by an acknowledgment in the form prescribed by law, signify his assent to such conveyance.

[No. 244.]

Argued April 20, 1888. Decided May 14, 1888.

IN ERROR to the Circuit Court of the United States for the Southern District of Ohio, to review a judgment in favor of defendant in an action to recover land in Ohio. *Reversed.*

The facts are stated in the opinion.

Mr. **C. B. Matthews**, for plaintiffs in error:

The deed has not been executed in accordance with the statute, and is therefore void.

Schoul. Hus. & W. § 175; *Trimmer* v. *Heagy*, 16 Pa. 484; *Dunham* v. *Wright*, 53 Pa. 167; *Glidden* v. *Strupler*, 52 Pa. 400; *Warner* v. *Crouch*, 14 Allen, 163; *Gerrish* v. *Mason*, 4 Gray, 432; *Palmer* v. *Paine*, 9 Gray, 56; *Dodge* v. *Hollinshead*, 6 Minn. 25; *Annan* v. *Folsom*, Id. 500; *Lane* v. *Soulard*, 15 Ill. 123; *Mariner* v. *Saunders*, 10 Ill. 113; *Cole* v. *Van Riper*, 44 Ill. 58; *Grapengether* v. *Fejervary*, 9 Iowa, 163; *Miller* v. *Wetherby*, 12 Iowa, 415.

This deed was not capable of being made a valid conveyance by the acknowledgment of the husband after the death of the wife.

Jackson v. *Stevens*, 16 Johns. 110; *Doe* v. *Howland*, 8 Cow. 277; *Smith* v. *Shackleford*, 9 Dana, 453; *Shoenberger* v. *Zook*, 34 Pa. 24; *Leggate* v. *Clark*, 111 Mass. 308; *Lawrence* v. *Heister*, 3 Har. & J. 371; *Dewey* v. *Campau*, 4 Mich. 565; *Dow* v. *Jewell*, 21 N. H. 470; *Kottman* v. *Ayer*, 1 Strobh. L. 552; *Stiles* v. *Probst*, 69 Ill. 382; *Rhea* v. *Rhenner*, 26 U. S. 1 Pet. 105 (7:72); *Elliott* v. *Peirsol*, Id. 328 (7:164).

The Statute of Limitations does not begin to run until the death of the husband.

Koltenbrock v. *Cracraft*, 36 Ohio St. 585; *Thompson* v. *Green*, 4 Ohio St. 217; *Clark* v. *Clark*, 20 Ohio St. 128.

(No counsel appeared for defendant in error.)

Mr. Justice **Harlan** delivered the opinion of the court:

This was an action to recover forty-two undivided one hundredth parts of a tract of land, in the County of Fayette, State of Ohio. The answer denied that the plaintiffs, or either of them, have any estate, title, or interest in or to this land, or to any part thereof. The defendant also pleaded that no cause of action accrued to the plaintiffs or to either of them against him, within twenty years prior to the filing of the petition.

The bill of exceptions shows that the plaintiffs in error, after offering in evidence a patent of the United States covering the land in controversy, made proof tending to establish the following facts: The patentee, William Green Munford, died intestate, leaving as his only heirs, Robert Munford, John Munford, Stanhope Munford, William Green Munford, Elizabeth Munford, and Mary Munford. Three of these heirs—Stanhope, William Green, and [720] Elizabeth—died early in the present century, unmarried, childless, and intestate; the other three inherited the patented lands in equal shares. Margaret Ann Munford, the only heir of Robert Munford, who also died intestate, was born in the year 1800, and in 1819 intermarried with John Sinclair. She died intestate September 13, 1837, having inherited one third of the property in controversy. Her husband died August 3, 1875. The original plaintiffs are her only heirs, and J. Hairiston Sewall is the grantee of some of the original plaintiffs for whom he was substituted as a party.

This was the case made by the plaintiffs in error who were plaintiffs below.

The defendant, to maintain the issues on his part, offered in evidence a certain deed, purporting to be a conveyance to one Cary S. Jones of the interest of John Sinclair and Margaret Ann Sinclair, his wife, in this land.

That deed is dated September 10, 1837—three days before the death of Mrs. Sinclair—and purports to be signed by the grantors—Sinclair and wife, of Gloucester County, Virginia—and to have been "signed, sealed and delivered in presence of Wm. Robins, Richard S. Jones, and Pet. R. Nelson." Attached to it are the following certificates:

"GLOUCESTER COUNTY, *to wit:*

"We, William Robins and Peyton R. Nelson, justices of the peace in the county aforesaid, in the State of Virginia, do hereby certify that Margaret Ann Sinclair, the wife of John Sinclair, parties to a certain deed bearing date on the 10th of September, 1837, and hereunto annexed, personally appeared before us, in our county aforesaid, and, being examined by us privily and apart from her husband, and having the deed aforesaid fully explained to her, she, the said Margaret Ann Sinclair, acknowledged the same to be her voluntary act and deed, and declared that she had willingly signed, sealed, and delivered the same, and that she wished not to retract it.

"Given under our hands and seals this 10th day of September, 1837.

"WM. ROBINS. [SEAL.]
"PET. R. NELSON. [SEAL.]

[721] "STATE OF VIRGINIA, *Gloucester County, to wit:*

"We, Wm. Robins—Thomas Smith, justices of the peace in the county and State aforesaid, do hereby certify that John Sinclair, a party to a certain deed bearing date the 10th day of September, 1837, and hereunto annexed, personally appeared before us in our own county aforesaid, and acknowledged the same to be his act and deed, and desired us to certify the said acknowledgment to the clerk of the counties of——, in the State of Ohio, in order that the said deed may be recorded.

"Given under our hands and seals this 14th of May, 1840.

"WM. ROBINS. [SEAL.]
"THOMAS SMITH. [SEAL.]

"STATE OF VIRGINIA, *Gloucester County, to wit:*

"I, John R. Cary, clerk of the court of the county aforesaid, in the State aforesaid, do hereby certify that Wm. Robins and Thomas Smith and Peyton R. Nelson, Esquires, whose names and seals are affixed to the within certificates of acknowledgments, were, at the time of subscribing the same, justices of the peace in and for the county aforesaid, duly commissioned and qualified, and that due faith and credit may and ought to be given to all their acts as such.

"In testimony whereof I have hereunto subscribed my name as clerk aforesaid and affixed the seal of the said county this 14th day of May, 1840, in the 64th year of the Commonwealth.

"[L. S.] JOHN R. CARY, *C. G. C.*

"STATE OF VIRGINIA, *Gloucester County, to wit:*

"I, Wm. Robins, presiding justice of the court of the county aforesaid, do hereby certify that John R. Cary, who has given the certificate below, is clerk of the said court, and that his attestation is in due form.

"Given under my hand this 14th day of May, 1840.

WM. ROBINS, Sen'r. [SEAL.]"

The plaintiffs objected to the admission of the conveyance in evidence, upon the ground that, as it was not acknowledged or proven by [722] John Sinclair until after the death of his wife, it was not sufficient and valid, as a conveyance of the latter's interest, either under the laws of Virginia where it was executed, or under the laws of Ohio, where the land is situated. This objection was overruled and the deed admitted in evidence, to which the plaintiffs excepted. The defendant offered in evidence deeds conveying to him whatever title Cary S. Jones had, and admitted that he was in possession of the premises in controversy.

No further evidence being offered, the court charged the jury that the deed of September 10, 1837, was a valid conveyance and passed to the grantee Jones all the interest of Margaret Ann Sinclair in the premises; that the defendant, by subsequent conveyances, had become the grantee of that interest; and that he was entitled to a verdict. To this charge the plaintiffs excepted.

The Act of the General Assembly of Ohio, passed February 21, 1831, entitled "An Act to Provide for the Proof, Acknowledgment, and Recording of Deeds and Other Instruments of Writing," was in force both when Mrs. Sinclair acknowledged the deed to Jones—September 10, 1837—and when it was acknowl-

edged, in 1840, by her husband. Its fifth section is in these words: "All deeds, mortgages, powers of attorney, and other instruments of writing, for the conveyance or incumbrance of any land, tenements or hereditaments, situate within this [that] State, executed and acknowledged or proved in any other State, Territory or country, in conformity with the laws of said State, Territory or country, or in conformity with the laws of this State, shall be valid as if executed within this State in conformity with the foregoing provisions of this Act." 29 Ohio Stat. 346; 1 S. & C. 458, 465.

The Statute of Virginia applicable to the case was the Act of February 24, 1819 (Rev. Code, Va. 1819, p. 361), entitled "An Act to Reduce into One the Several Acts for Regulating Conveyances and Concerning Wrongful Alienations."

Its first section provides:

"That no estate of inheritance or freehold, [723] or for a term of more than five years, in lands or tenements, shall be conveyed from one to another unless the conveyance be declared by writing sealed and delivered; nor shall such conveyance be good against a purchaser for valuable consideration, not having notice thereof, or any creditor, unless the same writing be acknowledged by the party or parties who shall have sealed and delivered it, or be proved by three witnesses to be his, her or their act, before the court of the county, city or corporation in which the land conveyed or some part thereof lieth, or in the manner hereinafter directed, and be lodged with the clerk of such court to be there recorded."

The fourth section provides:

"All bargains, sales and other conveyances whatsoever of any lands, tenements or hereditaments; whether they be made for passing any estate of freehold or inheritance, or for a term of years, and all deeds of settlement upon marriage wherein either lands, slaves, money or other personal things shall be settled or covenanted to be left or paid, at the death of the party or otherwise, and all deeds of trust and mortgages whatsoever, which shall hereafter be made and executed, shall be void, as to all creditors and subsequent purchasers 'for valuable consideration without notice,' unless they shall be acknowledged or proved and 'lodged with the clerk to be' recorded, according to the directions of this Act; but the same, as between the parties and their heirs, 'and as to all subsequent purchasers, with notice thereof, or without valuable consideration,' shall nevertheless be valid and binding."

The fifteenth section makes specific provision for the execution and acknowledgment of deeds by husband and wife. It is as follows:

"When a husband and his wife have sealed and delivered a writing, purporting to be a conveyance of any estate or interest, if she appear in court, and being examined privily and apart from her husband, by one of the judges thereof, shall declare to him that she did freely and willingly seal and deliver the said writing, to be then shewn and explained to her, and wishes not to retract it, and shall, before the said court, acknowledge the said writing, so again [724] shown to her, to be her act, such privy examination, acknowledgment and declaration shall thereupon be entered of record in such court; and if, before any two justices of the peace, for any county or corporation, in 'any State' or Territory of the United States 'or of the District of Columbia,' such married woman, being examined privily and apart from her husband, and having the writing aforesaid fully explained to her, shall acknowledge the same to be her act and deed, and shall declare that she had willingly signed, sealed and delivered the same, and that she wished not to retract it, and such privy examination, acknowledgment and declaration shall be certified, by such justices, under their hands and seals, by a certificate annexed to said writing, and to the following effect, that is to say: County or Corporation, &c: We, A. B. and C. D., justices of the peace in the county (or corporation) aforesaid, in the State (or Territory or District) of ———, do hereby certify that E. F., the wife of G. H., parties to a certain deed, bearing date on the — day of ———, and hereunto annexed, personally appeared before us in our county (or corporation) aforesaid, and being examined by us, privily and apart from her husband, and having the deed aforesaid fully explained to her, she, the said E. F., acknowledged the same to be her act and deed, and declared that she had willingly signed, sealed and delivered the same, and that she wished not to retract it. Given under our hands and seal this — day of ———. A. B. [Seal.] C. D. [Seal.]; and such certificate shall be offered for record to the clerk of the court in which such deed ought to be recorded; it shall be the duty of such clerk to record the said certificate accordingly, along with the deed to which it is annexed; and when the privy examination, acknowledgment and declaration of a married woman shall have been so taken in court and entered of record, or certified by two magistrates, and delivered to the clerk to be recorded, and the deed also shall have been duly acknowledged or proven, as to the husband, and delivered to the clerk to be recorded, pursuant to the directions of this Act, such deed shall be as effectual in law, to pass all the right, title and interest of the wife, as if she had been an unmarried woman: *Provided*, however, that no covenant [725] or warranty, contained in such deed hereafter executed, shall in any manner operate upon any *feme covert* and her heirs, further than to convey effectually, from such *feme covert* and her heirs, her right of dower, or other interest in real estate, which she may have at the date of such deed."

The first section of the Ohio Statute of 1831 (1 S. & C. 458), as modified by the subsequent Acts of January 29, 1833 (Id. 470), and February 17, 1834 (Id. 694), provides that when any man, or unmarried woman, above the age of eighteen years, "shall execute within this State, any deed, mortgage, or other instrument of writing, by which any land, tenement or hereditament shall be conveyed, or otherwise affected or incumbered in law, such deed, mortgage, or other instrument of writing, shall be signed and sealed by the grantor or grantors, maker or makers, or [and] such signing and sealing shall be acknowledged by such grantor or maker in the presence of two witnesses, who shall attest such signing and sealing and subscribe their names to such attestation, and such signing and sealing shall also be acknowledged

by such grantor or grantors, maker or makers, before a judge of the supreme court, or of the court of common pleas, a justice of the peace, notary public, mayor, or other presiding officer of an incorporated town or city, who shall certify such acknowledgment on the same sheet on which such deed, mortgage, or other instrument of writing may be printed or written; and shall subscribe his name to such certificate."

The second section of the same Act provides: "That when a husband and wife, she being eighteen years of age or upward, shall execute, within this State, any deed, mortgage, or other instrument of writing, for the conveyance or incumbrance of the estate of the wife, or her right of dower in any land, tenement or hereditament, situate within this State, such deed, mortgage, or other instrument of writing, shall be signed and sealed by the husband and wife; and such signing and sealing shall be attested and acknowledged in the manner prescribed in the first section of this Act; and, in addition thereto, the officer before whom such acknowledgment shall be made shall examine the wife, [726] separate and apart from her husband, and shall read or otherwise make known to her the contents of such deed, mortgage or other instrument of writing; and if upon such separate examination she shall declare that she did voluntarily sign, seal, and acknowledge the same, and that she is still satisfied therewith, such officer shall certify such examination and declaration of the wife, together with the acknowledgment as aforesaid, on such deed, mortgage, or other instrument of writing, and subscribe his name thereto."

Obviously, in view of the statutes of Ohio, the first inquiry must be whether the deed purporting to convey to Jones the interest of John Sinclair and wife in the lands in dispute was executed and acknowledged in conformity with the laws of Virginia, where that deed purports to have been made.

There has been no appearance in this court by the defendant; nor, in the examination of the questions presented, have we had the benefit of a brief in his behalf. But we are informed by the brief of the plaintiffs in error that it was claimed in the court below that neither the acknowledgment nor record of the Sinclair deed constituted parts of the deed itself, and that the effect of the want of acknowledgment was simply that defined by section four of the Virginia Act of 1819, namely, that the deed was valid and binding as between the parties and their heirs.

We do not understand such to have been the law of Virginia in respect either to the acknowledgment or recording of deeds made by husband and wife. In *First Nat. Bank of Harrisonburg* v. *Paul*, 75 Va. 594, 600, the question was as to the admissibility of parol evidence to show that the privy examination of a married woman was regularly taken in the form prescribed by the statute, or that the officer taking the same, by mistake or inadvertence, omitted material statements required to be set forth in the certificate of such examination. Referring to section 7 of chapter 117 of the Virginia Code of 1873—which, as we shall presently see, is substantially the same as section 15 of the Act of 1819—the court said: "It will thus be seen that the statute prescribes the necessary steps to be taken preparatory to a valid relinquishment of the claim for dower. The certificate [727] must set forth her declaration and acknowledgment as prescribed by the statute; it must be on or annexed to the deed; it must be admitted to record along with the deed, and when *all* these requirements shall have been complied with, and *not till then*, the writing operates to convey from the wife her right of dower." After observing that the object of the statute was to provide a substitute for the proceeding by fine in England, which was never in force in Virginia, whereby the rights of the wife on the one hand might be carefully guarded, and an indefeasible title secured on the other, the court proceeds: "As was said by *Judge* Tucker, *Harkins* v. *Forsyth*, 11 Leigh, 801, 'the validity of the deed is made to depend not upon the truth of the certificate, but upon its existence and its delivery to the clerk.' It is the authentic and sole medium of proving that the *feme covert* has acknowledged the deed with all the solemnities required by the statute." The Court of Appeals of Virginia, in the same case quotes with approval the following language from *Elliott* v. *Peirsol*, 26 U. S. 1 Pet. 340 [7:170]: "What the law requires to be done and appear of record can only be done and made to appear of the record itself, or an exemplification of the record. It is perfectly immaterial whether there be an acknowledgment or privy examination in fact or not—if there be no record of the privy examination—for by the express terms of the law it is not the fact of privy examination merely, but the recording of the fact which makes the deed effectual to pass the estate of a *feme covert*."

In *Rorer* v. *Roanoke Nat. Bank*, decided in 1887 (not yet in the regular reports, but reported in 4 S. E. Rep. 820, 826, 831), the court said that "all the requirements of the statute, including recordation as to both *husband and wife*, must be complied with, or else the wife's title does not pass." After an extended review of the Statutes of Virginia relating to conveyances, beginning with the Act of 1674, and including those of 1705, 1710, 1748, 1785, 1792, 1814, and 1819, the court further said: "The part of section 15, chap. 99, 1 Rev. Code 1819, prescribing the effect of acknowledgments of married women when recorded, was condensed substantially into what is now section 7, chap. 117, [728] Code 1873, which was the statute in force and applicable to the case in hand. * * * The statute is absolute; there is no room for presumptions resulting from technical rules of construction; and all its requisites must be substantially complied with, or else nothing passes by the deed of a married woman. As colony and State, such has been not only the general policy, but the unmistakable spirit and letter of the law in Virginia for over 200 years."

In view of these adjudications, it is clear that by the law of Virginia the acknowledgment and the recording of conveyances by husband and wife of lands in that Commonwealth, in the mode prescribed by her laws, is essential to pass the estate of the wife in such lands.

The question, however, remains as to the effect of the death of Mrs. Sinclair before her husband had acknowledged the deed. This question is by no means free from difficulty.

It was suggested, in a somewhat different form, but not decided, in the case of *Rorer* v. *Roanoke Nat. Bank.* It was there argued that if a married woman's deed only became effectual when duly admitted to record it would result that if the wife died between the date of her acknowledgment and the recording of the deed the instrument would be wholly void. But the court said: "Not so, however; for as between the husband and the grantee the deed would be valid and binding, though as to the wife it would be inoperative—ineffectual to pass her title—until duly recorded, for it is only then that a married woman's conveyance becomes a complete transaction. But it is useless to argue this proposition as the pretended recordation in 1875 of the deed of 1861 was prior to Mrs. Rorer's death. It is sufficient to say that, if the question were presented directly for decision, it would be an exceedingly interesting one, as the authority for recordation at a time subsequent to the execution and delivery of the deed seems to rest solely upon the presumption of the wife's continuing acquiescence; and in 2 Tuck. Bl. Com., Bk. 2, p. 268, the distinguished author significantly suggests the question whether recordation after the death of the wife would be effectual."

While it was not essential, under the Ohio [729] Statute, that the deed signed by Sinclair and wife be put upon record in Virginia, we are of opinion that upon her death the deed, previously signed and acknowledged by her, upon privy examination, but not acknowledged by the husband, prior to her death, became—so far as the laws of Virginia are concerned—inoperative as a conveyance of her interest in the lands in controversy. Until the husband acknowledged it, and thereby in the only way prescribed by statute, gave his assent to her conveying away her interest, the deed was ineffectual for any purpose. While it may not have been necessary that they should acknowledge the deed at the same time, or upon the same occasion, or before the same officer, the Statute of Virginia, upon any fair interpretation of its words, and having regard to the policy which induced its enactment, must be held to have required that the acknowledgment of the husband should occur in the lifetime of the wife, while she was capable of asking his consent to the conveyance of her lands. But that assent was of no avail after the death of the wife before the husband had, by acknowledgment of the deed, signified his willingness to have her convey to Jones, under whom the defendant claims title. Upon her death the title passed to some one. It did not pass to Jones, for the reason that there was not then in existence any completed conveyance, sufficient, under the law, to transfer her estate to a grantee. It, therefore, must have passed to her heirs, and their title could not be devested by any subsequent act of the husband. The fourth section of the Virginia Statute, declaring certain conveyances to be valid and binding as between the parties and their heirs, has no application to conveyances by a wife in which the husband does not join, during her lifetime, by an acknowledgment in the mode prescribed by law.

It results that, if the admissibility as evidence of the deed to Jones depends upon its validity, under the laws of Virginia, as a conveyance of Mrs. Sinclair's interest in these lands, the court erred in not excluding it from the jury.

Was the deed executed and acknowledged in conformity with the laws of Ohio, where the lands are situated? In other words, would the deed have conveyed the interest of Mrs. Sinclair if it had been executed and acknowledged in Ohio by the wife in her lifetime, but not acknowledged by the husband until after the [730 death of the wife? If so, it may be that, under the Ohio Statute of 1831, the deed would be good as between the heirs of Mrs. Sinclair and Jones; for that statute declares that a conveyance of lands in Ohio will be valid if acknowledged in conformity either with the laws of the State in which it is executed, or in conformity with the laws of Ohio.

Upon examining the Statutes of Ohio—the controlling provisions of which have been referred to—and, also, the decisions of the Supreme Court of that State to which our attention has been called, we find nothing to justify us in holding that a deed for land, acknowledged by the wife, but not acknowledged by the husband in the lifetime of the wife, will pass her estate in the lands conveyed. In *Ludlow* v. *O'Neil*, 29 Ohio St. 181, it was held—using the language of the syllabus—that "under the Statute of February 22, 1831, it is not indispensable to the validity of a deed executed by husband and wife that they should acknowledge it before the same officer or at the same time and place, or that their acknowledgment should be certified by a single certificate." Yet "the acknowledgment of the wife is not binding upon her until the deed is executed and acknowledged by the husband." "The husband," the court said, "can render the wife every needed protection by himself refusing to sign and acknowledge the deed. If she acknowledged it before the husband, it is presented to him with the wife's signature and acknowledgment, and he has only to refuse to acknowledge." We are of opinion that equally under the Ohio and Virginia Statutes, a deed by the husband and wife, conveying the latter's land, is inoperative to pass her title unless the husband—she having duly acknowledged the deed—should, in her lifetime, and by an acknowledgment in the form prescribed by law, signify his assent to such conveyance.

For the reasons stated the judgment is reversed, with directions to grant a new trial, and for further proceedings in conformity with law and the principles of this opinion.

Mr. Justice **Matthews** took no part in the decision of this case.

FARMERS' LOAN AND TRUST COMPANY, AND ELIJAH SMITH, Receiver and Trustee, *Appts.*, [649]

v.

HENRY L. NEWMAN, Trustee.

(See S. C. Reporter's ed. 649-661.)

Receiver of railroad—sale on foreclosure—payment of lien.

1. Where the receiver of a railroad company made an agreement with a person having a lien upon a part of the railroad, to pay such lien out of the moneys realized from such part of said railroad upon foreclosure sale, and induced the lienor to

surrender his lien, and the receiver bid in the property on such sale as an entirety,—*Held* that the lienor was entitled to be paid his lien out of the aggregate proceeds of the sale.

2. The right of the lienor thus to be paid is not to be defeated by the fact that the mortgage bondholders exercised the privilege given by the decree of sale to make payment, not in cash, but in mortgage bonds.

3. If they do not discharge, in money, such lien within a reasonable time, fixed for that purpose, the property should be again sold as an entirety, or so much thereof as shall be necessary to raise the amount of the lien.

[No. 253.]

Argued April 25, 26, 1888. Decided May 14, 1888.

APPEAL from a decree of the Circuit Court of the United States for the Western District of Missouri, setting aside a sale, made under a decree of foreclosure, of certain mortgaged railroad property, and requiring the receiver to regain possession of the property, unless the purchaser should pay a claim of the appellee within a certain named period. *Reversed.*

The facts are fully stated in the opinion.

Mr. **P. Henry Smyth,** for appellants:

It was the right of the Farmers' Loan and Trust Company to foreclose without making the intervener, Newman, a party, and to have the sale made subject to his prior claim.

Jerome v. *McCarter*, 94 U. S. 736 (24: 137); *Wabash & E. Canal* v. *Beers*, 66 U. S. 1 Black, 54 (17: 41); *Burnham* v. *Bowen*, 111 U. S. 779 (28: 597); *Farmers Loan & T. Co.* v. *Central R. R. Co. of Iowa*, 2 McCrary, 181.

It is competent for the court, if the plaintiff is entitled to a lien, to establish the same against the property, to fix a time for payment, and in default, a proper order of sale will be awarded.

Vilas v. *Page*, 9 Cent. Rep. 470, 106 N. Y. 452.

The relief granted is not prayed for in the bill, and is not consistent with the case made by the bill.

1 Dan. Ch. Pr. 5th Am. ed. 381; *Casady* v. *Woodbury County*, 18 Iowa, 120; *Hayward* v. *Eliot Nat. Bank*, 96 U. S. 615 (24:857); Story, Eq. Pl. § 40; Kerr, Inj. 619); *Shields* v. *Barrow*, 58 U. S. 17 How. 141 (15: 161).

Courts have no power to set aside their judgments and decrees at a term subsequent to that at which they are rendered and passed, unless the right to do so is preserved by motion or otherwise.

Cameron v. *McRoberts*, 16 U. S. 3 Wheat. 591 (4: 467); *McMicken* v. *Perin*, 59 U. S. 18 How. 511 (15: 506); *Bank of U. S.* v. *Moss*, 47 U. S. 6 How. 38 (12: 334); *Sibbald* v. *U. S.* 37 U.S.12 Pet.488–492 (9: 1167,1169); *Bronson* v. *Schulten*, 104 U. S. 415 (26: 799); *Schell* v. *Dodge*, 107 U. S. 630 (27: 601); *Phillips* v. *Negley*, 117 U. S. 665 (29: 1013).

Messrs. **John W. Noble,** *John C. Orrick* and **Tilton Davis,** for appellee:

The contract dated March 12, 1880, made by Elijah Smith as receiver, with Henry L. Newman, for himself and as trustee for John W. Waddell, was one for the benefit of the property then in the custody of the court, and thus within the power of the court to authorize.

Kennedy v. *St. Paul & P. R. R. Co.* 2 Dill. 448; *S. C.* 5 Dill. 519; *Miltonberger* v. *Logansport, C. & S. W. R. Co.* 106 U. S. 286 (27:117); *Barton* v. *Barbour*, 104 U. S. 126 (26:672); *Jerome* v. *McCarter*, 94 U. S. 734–738 (24:136–138); *Bank of Montreal* v. *Chicago C. & W. R. Co.* 48 Iowa, 518; *Meyer* v. *Johnston*, 53 Ala. 237–338; *First Nat. Bank* v. *Shedd*, 121 U. S. 74–86 (30:877–881; *Williamson* v. *Washington City, V. M. & G. S. R. R. Co.* 33 Gratt. 624.

The application was made on notice, and supported by the consent and request of substantially all the bondholders.

Wallace v. *Loomis*, 97 U. S. 146 (24:895); *Hale* v. *Frost*, 99 U. S. 389 (25:419); *Foedick* v. *Schall*, Id. 235–251 (25:339–342); *Miltonberger* v. *Logansport, C. & S. W. R. Co.* 106 U. S. 286, 309, 310 (27: 117, 126); *Union Trust Co.* v. *Walker*, 107 U. S. 596 (27: 490); *Union Trust Co.* v. *Souther*, Id. 594 (27:489); *Langdon* v. *Vermont & C. R. R. Co.* 53 Vt. 228; *Humphreys* v. *Allen*, 101 Ill. 490.

The trustee especially represented the bondholders in their request.

Shaw v. *Little Rock & Ft. S. R. Co.* 100 U. S. 605–612 (25:757–759); *First Nat. Bank* v. *Shedd*, 121 U. S. 74–86 (30:877–881).

The court had especially reserved the power to adjudicate this claim at the time of confirming the sale, and could subsequently act on it.

Farmers Loan & T. Co. v. *Central R. R. Co. of Iowa*, 7 Fed. Rep. 537; *Burnham* v. *Bowen*, 111 U. S. 776–783 (28:596–599).

The sale made under the foreclosure decree was of the road as an entirety, hence the whole sale had to be set aside and the whole road ordered to be resold.

Schulenberg v. *Memphis, C. & N. W. R. R. Co.* 67 Mo. 442; *Knapp* v. *St. Louis, K. C. & N. R. Co.* 74 Mo. 374; *Ireland* v. *Atchison, T. & S. F. R. R. Co.* 79 Mo. 572.

Mr. Justice **Harlan** delivered the opinion of the court: [650]

This is an appeal from a final order setting aside a sale, made under a decree of foreclosure, of certain mortgaged railroad property, as well as the confirmation thereof, and requiring the receiver, appointed in the foreclosure proceedings, to regain possession of the property, unless the purchaser, before the expiration of a named period, paid a claim of the present appellee, for $17,750, with interest thereon at the rate of 6 per cent per annum from November 30, 1880.

The origin of that claim, and the circumstances under which it was asserted in this suit, are as follows:

The Lexington, Lake and Gulf Railroad Company was a Missouri corporation, with power to construct and operate a road from Lexington to the southern boundary line of that State. Having constructed the roadbed from Lexington to Butler, in Bates County, and procured ties sufficient for its line as far south as Pleasant Hill, and having also done some dredging, and being indebted to contractors for such work and materials—its liability therefor being evidenced by two notes, one held by Monroe & Co. for $10,682.74, and the other by Lawrence Dean for $2,000, each dated October 12, 1871, and bearing interest at 10 per cent per annum from date—the company, January 16, 1872, conveyed its road, together with all its rights,

privileges, and franchises, including its depot grounds and other property, acquired and to be acquired, to Moses Chapman, in trust to secure the payment of said notes, and with authority in the trustee, upon default in paying the notes, principal and interest, on or before March 1, 1872, to sell the mortgaged property, at public auction, upon thirty days' notice of sale, for cash, and convey the same to the purchaser.

[651] On the 7th of February, 1872, the company leased its road and property (with the right to mortgage the same) to the Burlington and Southwestern Railway Company—for and in behalf of its Linneus Branch—a corporation, created under the laws of Missouri and Iowa, and whose road in Missouri was to extend from the Iowa line to Unionville, with a branch by way of Linneus to Lexington, thence to Kansas City and southwestern Missouri. The lease provided, anong other things, that the property leased and said Linneus Branch should be represented by one common stock, and, to all intents and purposes, constitute one line of road, and one common property, to be known as the Linneus Branch of the Burlington and Southwestern Railway. The lessor company, in the lease covenanted, among other things, that the leased premises were free from all liens, incumbrances, and debts, "except about the sum of $15,000 due contractors thereon."

On the first of April, 1872, the Burlington and Southwestern Railway Company placed a deed of trust upon its entire Linneus Branch and appurtenances, including the leased premises, extending from the main line of the mortgagor company at or near Unionville, by the way of Linneus and Lexington to Kansas City, and by the line of the leased premises from Lexington to Butler, to secure its bonds amounting to $1,600,000. Upon default in meeting the principal and interest of those bonds, the Farmers Loan and Trust Company, trustee in the last named deed, instituted in the court below a suit for foreclosure and sale. A final decree of foreclosure and sale was passed May 19, 1876, but, for some reason, it was not immediately executed.

On the 20th of February, 1877, Chapman, trustee in the deed of January 16, 1872, sold the mortgaged premises at public auction, after the required notice, to satisfy the debts secured by that deed, and Henry L. Newman, holding the note given to Monroe & Co., as trustee for the benefit of himself and one Waddell, became the purchaser. Chapman conveyed to Newman, as trustee, the deed being acknowledged August 22, 1877, and filed for record August 5, 1878.

On the 24th of December, 1879, Elijah Smith,
[652] receiver in the foreclosure suit, and also a holder of a large amount of bonds secured by the $1,600,000 mortgage, filed his petition in the foreclosure suit, alleging that Newman and others claimed to own that part of the mortgaged premises consisting of the graded roadbed between Lexington and Butler, and asking that they be enjoined from attempting to interfere with said premises or any part thereof. An injunction was granted, and negotiations then pending between Newman and others for the sale of what he had purchased were thereby broken off.

On the 10th of January, 1880, the Receiver, Smith, represented, by petition filed in the foreclosure suit, that a portion of the property in his custody is a line of railroad, partly constructed, "extending from Lexington, La Fayette County, Missouri, to the Town of Butler, in the County of Bates, being a portion of the property acquired by contract with the Lexington, Lake and Gulf Railroad Company;" that it was graded and bridged nearly that entire distance—82 miles; that the work was done some years ago, and was depreciating in value; that said portion of road, if completed, would be of great value to the parties in interest, and it was important to complete it "at once, and before the sale and confirmation under the decree in this case can be had;" that "said railroad and bridges are rapidly going to decay, and the field is threatened to be occupied by a rival line, which would destroy the value of said property," and that said road should at once be ironed and equipped for traffic, in order to protect, preserve, and save said property to the parties in interest. He asked authority to borrow $300,000, upon receiver's certificates, and that the indebtedness so created "be a lien upon said portion of said road before described only," and "prior to all other liens thereon, but said indebtedness to constitute no claim against any other property in the receiver's hands nor any other fund except that pertaining thereto, to wit, said part of said railroad lying south of Lexington, and such additions thereto and property as may be made or acquired by said fund so borrowed." By a subsequent petition he informed the court that it would require $500,000 to do this work, and stated other [653] reasons why he should be permitted to build and equip the line south of Lexington for traffic. He also represented that $600,000 had been expended upon that part. The application was granted after notice to the bondholders under the $1,600,000 mortgage, and with their consent. The order authorizing the Receiver to borrow $500,000 in certificates or debentures was made on March 8, 1880, and contained these provisions:

"And it is further ordered, adjudged and decreed that such certificates or debentures shall be and they are hereby adjudged to be a lien for the principal and interest thereof prior to all other liens or claims whatsoever upon that portion of said defendant's railroad before mentioned, with all of the property and appurtenances thereto belonging, to wit: * * * but upon no other property or funds in the possession of said Receiver. * * *

"And the said Receiver is further authorized and directed to settle and adjust, by payment or otherwise, any outstanding claims against the Lexington, Lake and Gulf Railroad Company which may seem to be prior in right to the claims of the Burlington and Southwestern Railway Company under the contract before mentioned, and to purchase in any outstanding or adverse lien or title to any portion or all of said property upon such terms as he may deem for the interest of the parties concerned, any right or title so acquired to be conveyed to him as receiver for the benefit of the parties in interest herein."

It is proper here to state that the certificates authorized by this order were not issued. But

a few days after the order was made, namely, on March 12, 1880, Smith, "as Receiver of the Burlington and Southwestern Railway Company, acting under authority of the Circuit Court of the United States," entered into a written agreement with Newman, representing himself and Waddell, in which it was stipulated, among other things: 1. That Newman should, by quitclaim deed, properly acknowledged and executed within twenty days, and placed in the hands of J. W. Noble in escrow, convey all the right, title and interest then held by or vested in him "in and to the railroad and property, appurtenances and franchises of what was formerly known as the Lexington, Lake and Gulf Railroad Company, extending southwardly from the Missouri River, at Lexington, Missouri, by the way of Pleasant Hill, to a point south of Butler;" such conveyance to include all the rights and interest acquired by Newman and Waddell under the trust deed to Chapman, of January 16, 1872, and the sale made under it on the 20th of February, 1877. 2. That said Receiver be substituted to all claims of every kind held by Newman and Waddell against the Lexington, Lake and Gulf Railroad Company. This agreement contained the following provisions:

[654]

"And in consideration of the premises, said party of the first part, as receiver, agrees to pay said Newman, out of the moneys coming into his hands from that part of said railroad hereinbefore mentioned, or from the sale of receiver's certificates lately authorized by said court to be issued by said Receiver, or from any earnings from that portion of said road, or arising from the sale thereof under the decree of said court, and within nine months from the eighteenth day of December, 1879, the sum of seventeen thousand seven hundred and fifty dollars, it being recognized and admitted in this settlement that the claim of said Newman to the above amount is a first and prior lien upon said portion of said railroad, paramount to the mortgage to said Farmers' Loan and Trust Company; but this agreement is not to bind the Receiver in reference to any other property or money coming into his hands, except from or pertaining to that part of the property aforesaid acquired from the Lexington, Lake and Gulf Railroad Company.

* * * * * *

"And it is further mutually agreed by and between the parties hereto that time is of the essence of this contract, and that in case said second party shall fail to comply on his part with the stipulations hereof said first party may have the right to have the same enforced specifically by the court in which said cause is pending or, at his option, declare this agreement absolutely null and void; and if said first party shall fail within said nine months from December 18, 1879, to pay said $17,750, said second party may apply to said court for the enforcement thereof, or, at his option, he may abrogate or abandon the same absolutely, and his rights in that event shall be the same as if this contract had not been made.

[655]

"And it is distinctly understood that this agreement is made by said Receiver under an order of said court, and refers to no other than said property before mentioned, and is to be paid out of no funds except such as arise from said portion of said road, and is to constitute no personal or individual claim against said Elijah Smith.

"It is further understood and agreed that when said quitclaim deed shall be delivered in escrow to said Noble that the note mentioned and described in the said trust deed to Moses Chapman, under which said Newman's claim arises, shall be delivered to said Noble also in escrow, and said trust deed shall also be delivered to him if in possession of parties, if not, as soon as practicable; and on the compliance of the Receiver with his part of this agreement said note and said trust deed shall be delivered to him, with the said quitclaim deed, as muniments of his title and as vouchers, said note to be canceled upon payment of said $17,750.00."

So far as the record discloses, all the stipulations in this agreement relating to Newman and Waddell were complied with by them. The required quitclaim deed was executed, and the same, together with said notes and trust deed, were placed in the hands of Noble, in escrow, and are now held by him in that way.

On the 30th of November, 1880, the Linneus Branch road, including said property, franchises, rights, and premises of the Lexington, Lake and Gulf Railroad Company was sold, *in gross*, by a special master in the foreclosure suit, Elijah Smith, as trustee for the bondholders, becoming the purchaser, at the price of $1,000,000, paid *entirely in mortgage bonds held by those whom he represented.*

The present suit was commenced by petition of intervention filed in the foreclosure suit, March 7, 1881, by Newman, as trustee for himself and Waddell. After referring to the efforts of Smith to have his purchase confirmed, he prays that said contract and agreement be enforced, and that before any order is made confirming and approving the sale, the Receiver be required to pay out of the proceeds of sale the sum of $17,750, with interest at the rate of 6 per cent per annum, since September 18, 1880, and for such other and further relief as may be just and proper. To this petition of intervention the complainants in the foreclosure suit filed an answer, and subsequently, July 5, 1881, obtained an order confirming the sales, approving the deed to Smith as trustee, which the master had previously submitted with his report of sale, and directing that the property be placed in his possession.

[656]

This order, however, contained the following provision: "But the said deed of conveyance and the delivery of said property to said grantee shall not be taken to affect any claim, right, interest in or lien upon or to said property sold and conveyed by said master's deed not pending in this court, or in any state court by leave of this court, but that said claim, right, interest, or lien are hereby reserved, subject to further order and decrees of this court, and the power to make further orders, decrees and directions in reference to said property in this cause is hereby expressly reserved by the court."

On the 9th of December, 1881, an amended answer was filed by the Farmers' Loan and Trust Company, and Smith, as receiver. The cause having been heard, a final decree was rendered whereby it was ordered and adjudged

that "there is justly due the intervener named the sum of seventeen thousand seven hundred and fifty dollars, with interest thereon from the 30th day of November, A. D. 1880, at the rate of six per centum per annum until paid, and that said claim to the amount aforesaid was authorized by this court to be incurred by its Receiver in this cause and was by him so incurred, and was to have been provided for and paid out of the proceeds of sale of that railroad and property described in the mortgage made to complainants by the defendant, the Burlington and Southwestern Railway Company, and which was sold on the 30th day of November, 1880, by order of this court, and the sale whereof was conditionally confirmed on July 5, 1881; that said claim not having been paid or provided for, [657] said sale of said railroad and property sold as aforesaid, as well as the confirmation thereof, is hereby set aside and for naught held, and said Receiver of this court in this cause is hereby ordered to take exclusive possession of said railroad and property, with any additions or appurtenances thereto absolutely necessary to regain his original possession of all said property in all things the same and with all the powers in him as said Receiver heretofore vested, at and upon the expiration of ninety (90) days from the date of this decree, unless within said last named period of ninety days the claim of said intervener in the sum hereinbefore determined be paid with interest and the costs of this proceeding to said H. L. Newman, trustee as aforesaid, by said Elijah Smith, as trustee for bondholders, purchaser at said sale; and if said claim be paid as aforesaid, then said sale shall stand and said order of confirmation be final as to said demand."

From that decree the present appeal is prosecuted.

From this history of the proceedings in the court below it satisfactorily appears:

1. That Newman, as trustee, had a lien upon the road south of Lexington—the same leased by the Lexington, Lake and Gulf Railway Company to the Burlington and Southwestern Railway Company for the benefit of the Linneus Branch of the latter corporation—prior and paramount to that created by the mortgage for $1,600,000.

2. That after the court passed the decree of foreclosure of May 19, 1876, the parties deemed it important to their interests that the road south of Lexington be completed for traffic before any sale took place under that decree, and to that end the Receiver, with their know- [658] ledge and consent, obtained leave to borrow money upon certificates, which should be a lien, prior to all others, upon that portion of the Burlington and Southwestern Railway acquired for its Linneus Branch under the contract of lease with the Lexington, Lake and Gulf Railroad Company of February, 1872, but upon no other property or funds in the possession of the Receiver.

3. That by the same order the Receiver was directed to settle and adjust, by payment or otherwise, any outstanding claims against the lessor company which might seem to be prior in right to the claims of the lessee company under said contract of lease, and to purchase in any outstanding or adverse lien or title to any portion or all of the property, upon such terms as he deemed best for the interests of the parties concerned, "any rights or title so acquired to be conveyed to him *as receiver, for the benefit of the parties in interest herein;*" the parties here referred to being the holders of bonds under the mortgage for $1,600,000 and the trustees in that mortgage.

4. That, under the authority of this order, the Receiver made, with Newman, as trustee, the agreement of March 12, 1880, whereby the latter agreed to convey to the former, as receiver, all his right, title and interest in the leased premises, including any rights acquired under Chapman's sale in virtue of the trust deed of January 16, 1872; and whereby, also, the Receiver agreed to pay to Newman the sum of $17,750 within nine months from December 18, 1879, such payment to be made "out of any money coming into his hands from that part of said railroad hereinbefore mentioned, or from the sale of receiver's certificates [then] lately authorized by said court to be issued by said Receiver, or from earnings from that portion of said road, *or arising from the sale thereof under the decree of said court;*" such agreement "not to bind the Receiver in reference to any other property or money coming into his hands except from or pertaining to that part of the property aforesaid acquired from the Lexington, Lake and Gulf Railroad Company."

It is not disputed that the order authorizing the Receiver to acquire by purchase for the benefit of the parties interested in the foreclo- [659] sure suit, any adverse lien upon the property decreed to be sold, was one that the court had power to make; nor is it claimed that the agreement made with Newman was beyond the authority conferred upon the Receiver by its order. And it is clear that the agreement gave Newman the right to be paid out of any proceeds arising from the sale of that part of the Linneus Branch covered by the deed of trust to Chapman and by the quitclaim to the Receiver. But, manifestly, this agreement, fairly interpreted, imposed upon the Receiver and the parties interested in the foreclosure suit the duty of obtaining from the court (as might readily have been done) such modification of the decree of sale, passed in 1876, as would enable the court and the parties to know how much was realized from a sale of that part of the road upon which Newman's prior lien rested. That result could have been reached only by selling that part separately, or by selling the mortgage property subject to that lien. Instead of having the sale made in one or the other of the forms suggested, Smith, as agent for the mortgage trustees and bondholders—having induced Newman to surrender his claim and title—bid in the property, *as an entirety*, including the leased premises upon which Newman had a paramount lien, for $1,000,000, *payable in mortgage bonds*. It is now said that there are no proceeds or moneys arising from the leased premises which can be awarded to Newman under his agreement with the Receiver. In conformity with that agreement he deposited with Mr. Noble, not only his quitclaim deed to the Receiver, but the Chapman trust deed and the note secured by it; and yet, according to the contention of the appellants, his only remedy is a separate, independent suit, asserting his

prior lien upon the part of the road covered by the Chapman deed of trust. This result has come from the failure of Smith, as agent for the mortgage trustees and bondholders, to carry out in good faith the agreement which he, as receiver, made with Newman, under the authority of the court, for the benefit of the same parties.

We are of opinion that the sale of the mortgaged property, as an entirety, without having obtained such modification of the decree of 1876 as would meet the requirements of the agreement with Newman, should, under the circumstances, be deemed an election upon the part of the appellants, and those whom they represent, not to have the mortgaged property sold in parts, or subject to Newman's prior lien, and, consequently, not to restrict his lien to that portion of the road embraced by the Chapman deed; and, therefore, he was entitled to be first paid out of the aggregate proceeds of the sale of the entire line covered by the $1,600,000 mortgage. His right thus to be paid is not to be defeated by the fact that the mortgage bondholders exercised the privilege given by the decree of sale to make payment, not in cash, but in mortgage bonds. If they do not discharge, in money, Newman's prior lien within a reasonable time fixed for that purpose, the property, covered by that mortgage, including the leased premises, should be again sold as an entirety, or so much thereof sold as may be necessary to raise the amount, principal and interest, due him, together with his costs in the court below, from the time he filed the petition of intervention.

It may be that the same result practically would be accomplished for Newman by executing the decree from which the present appeal is prosecuted. But we are of opinion that the court below erred in setting aside—even if it had the power to do so—the confirmation of the sale by the special master, and the order approving the deed made to the purchaser. The sale was confirmed, the deed to the purchaser approved, and the latter authorized to take possession, by the order of July 5, 1881. The reservations in that order did not authorize the court to set aside the confirmation of the sale and cancel the deed to the purchaser. The confirmation of the sale and the approval of the deed were, rather, subject to the power reserved, to protect and enforce, by subsequent orders, any claim or lien then pending either in that court, or, by its leave, in a state court. So far as Newman is concerned, such protection can be given, and should be given only, by an order directing the entire property, covered by the $1,600,000 mortgage, to be sold, in satisfaction of his claim or lien, without annulling the former sale or the confirmation thereof, and without withdrawing or canceling the deed made by the master to the purchaser.

To the extent indicated the decree is reversed and the cause is remanded for further proceedings consistent with this opinion.

TRAVELERS INSURANCE COMPANY OF HARTFORD, CONNECTICUT, *Plff. in Err.*, [661]

v.

SADIE P. McCONKEY.

(See S. C. Reporter's ed. 661-668.)

Accident policy—proof necessary—death by suicide or murder—self injury.

1. Where a policy provides that an insurance shall not extend to any case of death or personal injury unless the claimant under the policy establishes, by direct and positive proof, that such death or injury was caused by external violence and accidental means, it is incumbent upon the plaintiff, in a suit on such policy, to show that the death of the insured was the result not only of external and violent, but of accidental means.

2. The requirement of direct and positive proof did not make it necessary to establish the fact and circumstances of death by persons who were actually present when the insured received the injuries which caused his death; the proof on this point is none the less direct and positive because supplemented or strengthened by evidence of a circumstantial character.

3. Upon an issue as to suicide, self destruction is not to be presumed; nor, from the mere fact of death should it be presumed that the insured was murdered.

4. Where the policy provides that no claim shall be made under it where the death of the insured was caused by "intentional injuries, inflicted by the insured or any other person," a recovery cannot be had on the policy if the insured was murdered.

5. Under the provisions of such policy no valid claim can be made if the insured, either intentionally or when insane, inflicted upon himself the injuries which caused his death.

[No. 273.]

Argued May 2, 1888. Decided May 14, 1888.

IN ERROR to the Circuit Court of the United States for the Northern District of Iowa, to review a judgment against an insurance company upon an accident policy of insurance. *Reversed.*

The facts are fully stated in the opinion.

Messrs. **B. D. Lee** and *John P. Ellis*, for plaintiff in error:

The burden of proof was on claimant, upon the issue presented by the general denial, to show that insured died by accidental violence.

Freeman v. *Travelers Ins. Co.*, 4 New Eng. Rep. 621, 144 Mass. 572; Whart. & St. Med. Jur. § 914; *Quigley* v. *Merritt*, 11 Iowa, 147.

The admission in plea of justification cannot avail the plaintiff upon trial of the issue raised by general denial.

Herzman v. *Oberfelder*, 54 Iowa, 83; *Barr* v. *Hack*, 46 Iowa, 308; *Treadway* v *Sioux City & St. P. R. Co.* 40 Iowa, 526; *Heinrichs* v. *Terrell*, 65 Iowa, 25; *Mutual Ben. L. Ins. Co.* v. *Newton*, 89 U. S. 22 Wall. 37 (22:795).

It was error to give claimant, in the charge given to the jury, the benefit of a presumption which was dissipated by her own testimony in detailing the circumstances of the death.

Lilienthal v. *U. S.* 97 U. S. 237 (24:901); *Reynolds* v. *N. Y. Cent. & H. R. R. Co.* 58 N. Y. 248; *Bois* v. *Mut. Life Ins. Co.* 14 Ins. Law Jour. 237; *Accident Ins. Co.* v. *Crandal*, 120 U. S. 527 (30:740); *Mallory* v. *Travelers Ins. Co.* 47 N. Y. 52; *DeGogorza* v. *Knickerbocker L. Ins. Co.* 65 N. Y. 232; *Shank* v. *United Brethren Aid Soc.* 84 Pa. 385; *Pollock* v. *U. S. Mut. Accident Asso.* 102 Pa. 230.

As to the policy of the law and the extent which courts will recognize and enforce conditions annexed to a contract, we cite as leading cases:

U. S. v. *Robeson*, 34 U. S. 9 Pet. 319 (9:142); *Condon* v. *South Side R. R. Co.* 14 Gratt. 803; *Delaware & H. Canal Co.* v. *Pennsylvania Coal Co.* 50 N. Y. 250; *Braunstein* v. *Accidental Death Ins. Co.* 1 Best & S. 799; *Worsley* v. *Wood*, 6 T. R. 710; *Scott* v. *Avery*, 5 H. L. Cas. 811.

There is not sufficient uniformity in the definition of the term "accident" as used in policies of this class to enable it to be said that the meaning has been judicially settled; but it does not appear that if the insured should provoke an attack, death resulting therefrom could be called an accident.

Accident Ins. Co. v. *Crandal, supra; Ripley* v. *R. Pass. Assur. Co.* 2 Bigelow, Ins. Rep. 738.

The legal effect of this contract cannot be avoided.

Dwight v. *Germania L. Ins. Co.* 4 Cent. Rep. 529, 103 N. Y. 341; *Holly* v. *Metropolitan L. Ins. Co.* 7 Cent. Rep. 263, 105 N. Y. 487.

It was error on the part of the court to submit the case to the jury.

Chandler v. *Von Roeder*, 65 U. S. 24 How. 224 (16:633); *Schuylkill & D. Imp. & R. R. Co.* v. *Munson*, 81 U. S. 14 Wall. 442 (20:867); *Fresh* v. *Gilson*, 38 U. S. 16 Pet. 331 (10:983); *Anderson County* v. *Beal*, 113 U. S. 227 (28:966); *Baylis* v. *Travelers Ins. Co.* Id. 316 (28: 989).

The charge submits a question to the jury not raised by the evidence.

Ward v. *U. S.* 81 U. S. 14 Wall. 28 (20:792).

It assumes the existence of a fact of which there is no evidence.

Jones v. *Randolph*, 104 U. S. 108 (26:671); *Chicago, R. I. & P. R. R. Co.* v. *Houston*, 95 U. S. 697 (24:542).

It is based upon a theory unsupported by evidence.

Michigan Ins. Bank v. *Eldred*, 76 U. S. 9 Wall. 544 (19:763); *Davis* v. *Patrick*, 122 U. S. 138 (30:1090).

Messrs. **W. G. Thompson** and *H. B. Fouke*, for defendant in error:

Admitting that the facts in this case create a suspicion that the death of the insured was violent, and was caused either by intentional injuries or a suicidal act of the deceased, the presumption of law is against both and must be fairly proved.

Mallory v. *Travelers Ins. Co.* 47 N. Y. 52; *Penfold* v. *Universal L. Ins. Co.* 85 N. Y. 317; *Phillips* v. *Louisiana Eq. L. Ins. Co.* 5 Bigelow, Ins. Rep. 165; *S. C.* 26 La. Ann. 404; 3 Ins. Law Jour. 579; Bliss, Life Ins. 1st ed. 360, 362, 587; *Guardian Mut. L. Ins. Co.* v. *Hogan*, 80 Ill. 35; *Allen* v. *Willard*, 57 Pa. 380; Whart. Ev. § 1247, 355, 356 and notes.

Self destruction cannot be presumed, neither can murder be presumed.

Bank of U. S. v. *Dandridge*, 25 U. S. 12 Wheat. 69 (6:554); *Mutual L. Ins. Co.* v. *Terry*, 82 U. S. 15 Wall. 580 (21:236); *Phillips* v. *Louisiana Eq. L. Ins. Co.* 26 La. Ann. 404; *Mallory* v. *Travelers Ins. Co.* 47 N. Y. 52; *Greenleaf* v. *Illinois Cent. R. R. Co.* 29 Iowa, 48; *Allen* v. *Willard*, 57 Pa. 380; *Accident Ins. Co.* v. *Crandal*, 120 U. S. 527, 532 (30:740,742); *Penfold* v. *Universal L. Ins. Co.* 85 N. Y. 317, and cases cited; 1 Phil. Ev. Cow. & H. Notes, 598, 732, 604.

Mr. Justice **Harlan** delivered the opinion of the court:

This is a suit upon what is commonly called an accident policy of insurance. There was a verdict and judgment against the Insurance Company for the sum of $5,600 and costs. The case is here upon alleged errors of law committed at the trial to the prejudice of the defendant.

The policy, by its terms, insures the life of George P. McConkey, in the sum of $5,000, for the term of twelve months, commencing at noon on the 7th of November, 1882; "the said sum insured to be paid to his wife, Sadie P. McConkey, if surviving (in event of her prior death said sum shall be paid to the legal representatives of the insured), within ninety days after sufficient proof that the insured, at any time within the continuance of this policy, shall have sustained bodily injuries, effected through external, violent, and accidental means, within the intent and meaning of this contract and the conditions hereunto annexed, and such injuries alone shall have occasioned death within ninety days from the happening thereof; or if the insured shall sustain bodily injuries, by means as aforesaid, which shall, independently of all other causes, immediately and wholly disable and prevent him from the prosecution of any and every kind of business pertaining to the occupation under which he is insured, then, on satisfactory proof of such injuries, he shall be indemnified against loss of time thereby, in a sum not exceeding twenty-five dollars per week, for such period of continuous total disability as shall immediately follow the accident and injuries as aforesaid, not exceeding, however twenty-six consecutive weeks from the time of the happening of such accident." [66

The policy also contained these provisions: "*Provided* always, that this insurance shall not extend to hernia, nor to any bodily injury of which there shall be no external and visible sign, nor to any bodily injury happening directly or indirectly in consequence of disease, nor to any death or disability which may have been caused wholly, in part, or jointly, by bodily infirmities or disease existing prior or subsequent to the date of this contract, or by the taking of poison or contact with poisonous substances, or by any surgical operation or medical or mechanical treatment; nor to any case except where the injury is the proximate and sole cause of the disability or death; and no claim shall be made under this policy when the death or injury may have been caused by dueling, fighting, wrestling, lifting or by over exertion, or by suicide (felonious or otherwise, sane or insane), or by sunstroke, freezing, or intentional injuries inflicted by the insured or any other person, or when the death or injury may have happened in consequence of war, riot, or invasion, or of riding or driving races, or of voluntary exposure to unnecessary danger, hazard, or perilous adventure, or of violating the rules of any company or corporation, or when the death or injury may have happened while the insured was, or in consequence of his having been under the influence of intoxicating drinks, or while employed in mining, blasting, or wrecking, or in the manufacture, transportation, or use of gunpowder or other explosive substances (unless insured to cover such occu- [66

pation), or while engaged in or in consequence of any unlawful act; and this insurance shall not be held to extend to disappearances, nor to any case of death or personal injury, unless the claimant under this policy shall establish by direct and positive proof that the said death or personal injury was caused by external violence and accidental means."

The petition setting out the plaintiff's cause of action alleged that the insured, on or about January 2, 1882, "was accidentally shot through the heart by a pistol or gun, loaded with powder and ball, by a person or persons unknown to plaintiff, by reason of which accidental injury said George P. McConkey then and there instantly died, of which accident and death said defendant was duly and legally notified," etc.

The answer denies that the death of the insured was occasioned by bodily injuries effected through external, violent, and accidental means (or effected through external violence and accidental means), within the meaning of the contract of insurance. It alleges: (1) That his death was caused by suicide; (2) that it was caused by intentional injuries inflicted either by the insured or by some other person.

As the argument addressed to this court had special reference to the charge to the jury, the following extract from it is given, as showing the general grounds upon which the court below proceeded:

"The plaintiff exhibits the policy in evidence and gives evidence of the fact that the insured was found dead within the life of the policy, from a pistol shot through the heart. This evidence satisfies the terms of the policy with respect to the fact that the assured came to his death by 'external and violent means,' and the only question is whether the means by which he came to his death were also 'accidental.'

364] "It is manifest that self destruction cannot be presumed. So strong is the instinctive love of life in the human breast and so uniform the efforts of men to preserve their existence that suicide cannot be presumed. The plaintiff is therefore entitled to recover unless the defendant has by competent evidence overcome this presumption and satisfied the jury by a preponderance of evidence that the injuries which caused the death of the insured were intentional on his part.

"Neither is murder to be presumed by the jury; crime is never to be presumed; but if the jury find from the evidence that the insured was in fact murdered, the death was an accident as to him, the same as if he had been killed by the falling of a house or the derailment of a railway car in which he was a passenger. If the jury find that the injuries of the insured resulting in his death were not intentional on his part the plaintiff has a right to recover.

"But if the jury find that the injuries inflicted upon the assured, causing his death, whether by the assured himself or any other person, were intentional on the part of the assured, the plaintiff cannot recover in this action.

"The inquiry, therefore, before the jury is resolved into a question of suicide, because if the insured was murdered the destruction of his life was not intentional on his part.

"The defendant, in its answer, alleges that the death of the insured was caused by suicide.

"The burden of proving this allegation by a preponderance of evidence rests on the defendant. The presumption is that the death was not voluntary; and the defendant, in order to sustain the issue of suicide on his part, must overcome this presumption and satisfy the jury that the death was voluntary."

The court also said: "In order, therefore, to sustain the plea of suicide, the defendant must have given to the jury evidence sufficient to overcome the presumption to which I have referred, and to convince the jury that the injury from which the insured died was voluntary or intentional on his part."

As further illustrating the views of the learned judge who presided at the trial, it may [665] also be stated that the defendant asked the court to instruct the jury as follows: "The burden of proof is upon the plaintiff to establish, by a preponderance of credible testimony, that the deceased came to his death from injuries (or an injury) effected through external, violent, and accidental means within the intent and meaning of the contract and conditions expressed in the policy." That instruction was given with the following explanation or qualification:

"That it does clearly appear from the evidence that the insured came to his death from injuries or an injury effected through violent and external means, and that the presumption is that the means were unintentional on the part of the insured, which the court holds satisfies the contract. This presumed fact is not conclusive, and may be overcome by evidence, if such there is in the case, that the injuries were voluntary or intentional."

The defendant also asked the following instructions: "Plaintiff must establish by direct and positive proof that the death was caused by external violence and accidental means, and, failing in this, she will not be entitled to a verdict." "Plaintiff's case must not rest upon mere conjecture, but her proof must be such as to lead directly to the conclusion that the death was effected by accidental means within the meaning of the policy, and unless she have adduced proof of that character your verdict should be for the defendant." These instructions were given with the following qualifications: "The external violence appearing in the fact that the death ensued from a pistol shot through the heart, the presumption is that it was accidental—not intentional—on the part of the assured, which facts, proved and presumed, make out the plaintiff's case, unless the defendant has satisfied the jury by affirmative proof that the means of death were intentional on the part of the insured."

There is no escape from the conclusion that, [666] under the issue presented by the general denial in the answer, it was incumbent upon the plaintiff to show, from all the evidence, that the death of the insured was the result, not only of external and violent, but of accidental means. The policy provides that the insurance shall not extend to any case of death or personal injury, unless the claimant under the policy establishes, by direct and positive proof, that such death or personal injury was caused by external violence *and* accidental means. Such being the contract, the court must give effect to its provisions according to the fair meaning

of the words used, leaning, however,—where the words do not clearly indicate the intention of the parties—to that interpretation which is most favorable to the insured. *First Nat. Bank* v. *Hartford F. Ins. Co.* 95 U. S. 678 [24: 565]; *Western Ins. Co.* v. *Cropper*, 32 Pa. 355; *Reynolds* v. *Commerce F. Ins. Co.* 47 N. Y. 604; *Anderson* v. *Fitzgerald*, 4 H. L. Cas. 484, 498, 507; *Fowkes* v. *Manchester & L. L. Assur. & Loan Asso.* 3 Best & S. 925.

The requirement, however, of direct and positive proof, as to certain matters, did not make it necessary to establish the fact and attendant circumstances of death by persons who were actually present when the insured received the injuries which caused his death. The two principal facts to be established were external violence and accidental means, producing death. The first was established when it appeared that death ensued from a pistol shot through the heart of the insured. The evidence on that point was direct and positive; as much so, within the meaning of the policy, as if it had come from one who saw the pistol fired; and the proof, on this point, is none the less direct and positive because supplemented or strengthened by evidence of a circumstantial character.

Were the means by which the insured came to his death also accidental? If he committed suicide, then the law was for the Company, because the policy, by its terms, did not extend to or cover self destruction, whether the insured was at the time sane or insane. In respect to the issue as to suicide, the court instructed the jury that self destruction was not to be presumed. In *Mallory* v. *Travelers Ins. Co.* 47 N. Y. 54,—which was a suit upon an accident policy—it appeared that the death was caused either by accidental injury or by the suicidal act of the deceased. "But," the court properly said, "the presumption is against the latter. It is contrary to the general conduct of mankind; it shows gross moral turpitude in a sane person." Did the court err in saying to the jury that, upon the issue as to suicide, the law was for the plaintiff, unless that presumption was overcome by competent evidence? This question must be answered in the negative. The condition that direct and positive proof must be made of death having been caused by external, violent, and accidental means, did not deprive the plaintiff, when making such proof, of the benefit of the rules of law established for the guidance of courts and juries in the investigation and determination of facts.

[667]

Upon like grounds, we sustain the ruling to the effect that the jury should not presume, from the mere fact of death, that the insured was murdered. The facts were all before the jury as to the movements of the insured on the evening of his death, and as to the condition of his body and clothes when he was found dead, at a late hour of the night, upon the floor of his office. While it was not to be presumed, as a matter of law, that the deceased took his own life, or that he was murdered, the jury were at liberty to draw such inferences in respect to the cause of death as, under the settled rules of evidence, the facts and circumstances justified.

We are, however, of opinion that the instructions to the jury were radically wrong in one particular. The policy expressly provides that no claim shall be made under it where the death of the insured was caused by "*intentional* injuries, inflicted by the insured *or any other person.*" If he was murdered, then his death was caused by intentional injuries inflicted by another person. Nevertheless, the instructions to the jury were so worded as to convey the idea that if the insured was murdered, the plaintiff was entitled to recover; in other words, even if death was caused wholly by intentional injuries inflicted upon the insured by another person, the means used were "accidental" as to him, and therefore the Company was liable. This was error.

[668]

Upon the whole case, the court is of opinion, that, by the terms of the contract, the burden of proof was upon the plaintiff, under the limitations we have stated, to show, from all the evidence, that the death of the insured was caused by external violence and accidental means; also, that no valid claim can be made under the policy, if the insured, either intentionally or when insane, inflicted upon himself the injuries which caused his death, or if his death was caused by intentional injuries inflicted upon him by some other person.

The judgment is accordingly reversed, and the cause remanded, with directions to grant a new trial and for further proceedings consistent with this opinion.

EDWARD LELOUP, *Plff. in Err.*, [640]
v.
PORT OF MOBILE.

(See S. C. Reporter's ed. 640-649.)

License tax on telegraph company unconstitutional—interstate commerce—tax on property—void city tax.

1. Where a telegraph company is doing the business of transmitting messages between different States, and has accepted and is acting under the telegraph law passed by Congress July 24, 1866, no State within which it sees fit to establish an office can impose upon it a license tax, or require it to take out a license for the transaction of such business.

2. Telegraphic communications are commerce, as well as in the nature of postal service, and if carried on between different States, are interstate commerce, and within the power of regulation conferred upon Congress, free from the control of state regulations, except such as are strictly of a police character; and any state regulations by way of tax on the occupation or business, or requiring a license to transact such business, are unconstitutional and void.

3. A general license tax on a telegraph company affects its entire business, interstate as well as domestic or internal, and is unconstitutional.

4. The property of a telegraph company, situated within a State, may be taxed by the State as all other property is taxed; but its business of an interstate character cannot be thus taxed.

5. The Western Union Telegraph Company established an office in the City of Mobile, Alabama, and was required to pay a license tax under a city ordinance, which imposed an annual license tax of $25 on all telegraph companies, and the agent of the company was fined for the nonpayment of this tax; in an action to recover the fine, he pleaded the charter and nature of occupation of the company, and its acceptance of the Act of Congress of July 24, 1866, and the fact that its business consisted in transmitting messages to all parts of the United States, as well as in Alabama; *Held*, a good defense.

[No. 274.]

Submitted May 2, 1888. Decided May 14, 1888.

IN ERROR to the Supreme Court of the State of Alabama to review a judgment of that court, affirming a judgment of the Mobile Circuit Court in favor of plaintiff, in an action brought by the Port of Mobile, a municipal corporation, against an agent of a telegraph company, to recover a penalty imposed for the violation of an ordinance, by neglecting to pay a license tax imposed on the company. *Reversed.*

The facts are fully stated in the opinion.

Mr. **Gaylord B. Clark,** for plaintiff in error:

A State cannot legally impose a license or privilege tax such as that demanded by the Port of Mobile.

Brown v. *Maryland*, 25 U. S. 12 Wheat. 419, 439 (6: 678, 685); *Pensacola Tel. Co.* v. *W. U. Tel. Co.* 96 U. S. 1 (24: 708); *State Tax on Railway Gross Receipts*, 82 U. S. 15 Wall. 284 (21: 164); *Hall* v. *DeCuir*, 95 U. S. 485 (24: 547); *License Tax Cases*, 72 U. S. 5 Wall. 462 (18: 497;) *Osborne* v. *Mobile*, 83 U. S. 16 Wall. 479 (21: 470); *Pickard* v. *Pullman Southern Car Co.* 117 U. S. 34 (29: 785); *Robbins* v. *Shelby County Taxing Dist.* 120 U. S. 489 (30: 694); *W. U. Tel. Co.* v. *Pendleton*, 122 U. S. 347 (30: 1187); *Moran* v. *New Orleans*, 112 U. S. 69 (28: 653); *Gloucester Ferry Co.* v. *Pennsylvania*, 114 U. S. 196 (29: 158).

(No counsel appeared for defendant in error.)

[641] *Mr. Justice* **Bradley** delivered the opinion of the court:

This was an action brought in the Mobile Circuit Court, in the State of Alabama, by the Port of Mobile, a municipal corporation, against Edward Leloup, agent of the Western Union Telegraph Company, to recover a penalty imposed upon him for the violation of an ordinance of said corporation, adopted in pursuance of the powers given to it by the Legislature of Alabama, and in force in August, 1883. The ordinance was as follows, to wit: "Be it ordained by the Mobile Police Board, that the license tax for the year, from the 15th of March, 1883, to the 15th of March, 1884, be, and the same is hereby, fixed as follows: * * *

"On Telegraph Companies, $225 * * *

"Be it further ordained: For each and every violation of the aforesaid ordinance the person convicted thereof shall be fined by the recorder not less than one nor more than fifty dollars."

The complaint averred that the defendant, being the managing agent of the Western [642] Union Telegraph Company, a corporation having its place of business in the said Port of Mobile, and then and there engaged in the business and occupation of transmitting telegrams from and to points within the State of Alabama and between the private individuals of the State of Alabama, as well as between citizens of said State and citizens of other States, committed a breach of said ordinance by neglecting and refusing to pay said license to the said municipal corporation. The complainant further averred that for this breach the recorder of the Port of Mobile imposed on the defendant a fine of five dollars, for which sum the suit was brought.

The defendant pleaded that at the time of the alleged breach of said ordinance, he was the duly appointed manager, at the Port of Mobile, of the Western Union Telegraph Company. That said company "was, prior to the fifth day of June, 1867, a telegraph company duly incorporated and organized under the laws of the State of New York, and by its charter authorized to construct, maintain, and operate lines of telegraph in and between the various States of the Union, including the State of Alabama. That on said fifth day of June, 1867, the said telegraph company duly filed its written acceptance with the Postmaster-General of the United States of the restrictions and obligations of an Act of Congress entitled 'An Act to Aid in the Construction of Telegraph Lines and to Secure to the Government the Use of the Same for Postal, Military, and Other Purposes,' approved July 24, 1866. That in accordance with the authority of its said charter and the said Act of Congress, and by agreement with the railroad companies, the said telegraph company constructed its lines and was at the time of the said alleged breach of said ordinance, maintaining and operating said lines of telegraph on the various public railroads leading into or through the said Port of Mobile: to wit, the Mobile and Ohio Railroad, a railroad extending from the said Port of Mobile, in Alabama, through the States of Mississippi, Tennessee, and Kentucky, to Cairo, in the State of Illinois; the Louisville and Nashville Railroad, extending from Cincinnati, in the State of Ohio, through said Port of Mobile to New Orleans, in the State of Louisiana, with a branch extending from said [643] State of Alabama over the Pensacola and Louisville Railroad to Pensacola, in the State of Florida. That the said telegraph lines so running into or through said Port of Mobile connected with and extended beyond the termini of the said railroads over other railroads, making continuous lines of telegraph from the office of said company, in said Port of Mobile, to, through, and over all of the principal railroads, post roads, and military roads in and of the United States, and having offices for the transaction of telegraph business in the departments at Washington, in the District of Columbia, and in all the principal cities, towns, and villages in each of the United States and in the Territories thereof. That all of said railroads so leading into and through the said Port of Mobile and elsewhere in the United States are public highways, and that the daily mails of the United States are regularly carried thereon, under authority of law and the direction of the Postmaster-General, and that said railroads and each of them are post roads of the United States. That said telegraph lines are also constructed under and across the navigable streams of the United States, in the State of Alabama and in the other States of the Union, but in all cases said lines are so constructed and maintained as not to obstruct the navigation of such streams and the ordinary travel on such military and post roads. That the said telegraph company was, before and during said year, commencing March 15, 1883, and now is, engaged in the business of sending and receiving telegrams over said lines for the public between its said office in the Port of Mobile and other places in other States and Territories of the United States, and to and from foreign countries; also in sending

telegraphic communications between the several departments of the Government of the United States and their officers and agents, giving priority to said official telegraphic communications over all other business. And defendant avers that said official telegrams have been and are sent at rates which have been fixed by the Postmaster-General annually since the said 5th of June, 1867. And defendant avers that as the manager of said company and in its name and under its direction and appointment, and in no other manner or capacity, [644] was he engaged in said telegraph business at the time and the manner as alleged in said complaint."

To this plea a demurrer was filed and sustained by the court, and judgment was given for the plaintiff; and, on appeal to the Supreme Court of Alabama, this judgment was affirmed. The present writ of error is brought to review the judgment of the supreme court. That court adopted its opinion given on a previous occasion between the same parties, in which the circuit court had decided in favor of the defendant, and its decision was reversed. In that opinion the supreme court said: "The defense was that the ordinance is an attempt to regulate commerce and violative of the clause of the Constitution of the United States which confers on Congress the 'power to regulate commerce with foreign nations and among the several States.' The circuit court held the defense good and gave judgment against the Port of Mobile. Is the ordinance a violation of the Constitution of the United States? We will not gainsay that this license tax was imposed as a revenue measure—as a means of taxing the business, and thus compelling it to aid in supporting the city government. That no revenue for state or municipal purposes can be derived from the agencies or instrumentalities of commerce, no one will contend. The question generally mooted is, how shall this end be attained? In the light of the many adjudications on the subject, the ablest jurists will admit that the line which separates the power from its abuse is sometimes very difficult to trace. No possible good could come of any attempt to collate, explain and harmonize them. We will not attempt it. We confess ourselves unable to draw a distinction between this case and the principle involved in *Osborne* v. *Mobile*, 83 U. S. 16 Wall. 479 [21:470]. In that case the license levy was upheld, and we think it should be in this. *Joseph* v. *Randolph*, 71 Ala. 499."

In approaching the question thus presented, it is proper to note that, the license tax in question is purely a tax on the privilege of doing the business in which the telegraph company was engaged. By the laws of Alabama in force at the time this tax was imposed, the telegraph [645] company was required, in addition, to pay taxes to the State, county, and Port of Mobile, on its poles, wires, fixtures and other property, at the same rate and to the same extent as other corporations and individuals were required to do. Besides the tax on tangible property, they were also required to pay a tax of three-quarters of one per cent on their gross receipts within the State.

The question is squarely presented to us, therefore, whether a State, as a condition of doing business within its jurisdiction, may exact a license tax from a telegraph company, a large part of whose business is the transmission of messages from one State to another and between the United States and foreign countries, and which is invested with the powers and privileges conferred by the Act of Congress passed July 24, 1866, and other Acts incorporated in title LXV of the Revised Statutes. Can a State prohibit such a company from doing such a business within its jurisdiction, unless it will pay a tax and procure a license for the privilege? If it can, it can exclude such companies, and prohibit the transaction of such business altogether. We are not prepared to say that this can be done.

Ordinary occupations are taxed in various ways, and, in most cases, legitimately taxed. But we fail to see how a State can tax a business, occupation when it cannot tax the business itself. Of course, the exaction of a license tax, as a condition of doing any particular business is a tax on the occupation; and a tax on the occupation of doing a business is surely a tax on the business.

Now, we have decided that communication by telegraph is commerce, as well as in the nature of postal service, and if carried on between different States, it is commerce among the several States, and directly within the power of regulation conferred upon Congress, and free from the control of state regulations, except such as are strictly of a police character. In the case of *Pensacola Tel. Co.* v. *Western Union Tel. Co.* 96 U. S. 1 [24:708], we held that it was not only the right, but the duty of Congress to take care that intercourse among the States and the transmission of intelligence between them be not obstructed or unnecessarily incumbered by state legislation; and that [646] the Act of Congress passed July 24, 1866, above referred to, so far as it declares that the erection of telegraph lines shall, as against state interference, be free to all who accept its terms and conditions, and that a telegraph company of one State shall not, after accepting them, be excluded by another State from prosecuting its business within her jurisdiction, is a legitimate regulation of commercial intercourse among the States, and is also appropriate legislation to execute the powers of Congress over the postal service. In *Western Union Tel. Co.* v. *Texas*, 105 U. S. 460 [26:1067], we decided that a State cannot lay a tax on the interstate business of a telegraph company, as it is interstate commerce, and that if the company accepts the provisions of the Act of 1866 it becomes an agent of the United States, so far as the business of the government is concerned; and state laws are unconstitutional which impose a tax on messages sent in the service of the government, or sent by any persons from one State to another. In the present case, it is true, the tax is not laid upon individual messages, but it is laid on the occupation, or the business of sending such messages. It comes plainly within the principle of the decisions lately made by this court in *Robbins* v. *Shelby County Taxing Dist.* 120 U. S. 489 [30:694], and *Philadelphia & S. M. Steamship Co.* v. *Pennsylvania*, 122 U. S. 326 [30:1200].

It is parallel with the case of *Brown* v. *Maryland*, 25 U. S. 12 Wheat. 419 [6:678]. That

was a tax on an occupation, and this court held that it was equivalent to a tax on the business carried on,—the importation of goods from foreign countries,—and even equivalent to a tax on the imports themselves, and therefore contrary to the clause of the Constitution which prohibits the States from laying any duty on imports. The Maryland Act which was under consideration in that case declared that "all importers of foreign articles or commodities, etc., and all other persons selling the same by wholesale, etc., shall, before they are authorized to sell, take out a license, * * * for which they shall pay fifty dollars," etc., subject to a penalty for neglect or refusal. *Chief Justice* Taney, [647] referring to the case of *Brown* v. *Maryland* in *Almy* v. *California*, 65 U. S. 24 How. 169, 173 [16:644,646], in which it was decided that a state stamp tax on bills of lading was void, said: "We think this case cannot be distinguished from that of *Brown* v. *Maryland*. That case was decided in 1827, and the decision has always been regarded and followed as the true construction of the clause of the Constitution now in question." * * * "The opinion of the court, delivered by *Chief Justice* Marshall, shows that [the case] was carefully and fully considered by the court. And the court decided that this state law [the Maryland law under consideration in *Brown* v. *Maryland*], and the mode of imposing it, by giving it the form of a tax on the occupation of the importer, merely varied the form in which the tax was imposed, without varying the substance."

But it is urged that a portion of the telegraph company's business is internal to the State of Alabama, and therefore taxable by the State. But that fact does not remove the difficulty. The tax affects the whole business without discrimination. There are sufficient modes in which the internal business, if not already taxed in some other way, may be subjected to taxation, without the imposition of a tax which covers the entire operations of the company.

The state court relies upon the case of *Osborne* v. *Mobile*, 83 U. S. 16 Wall. 479 [21:470], which brought up for consideration an ordinance of the city, requiring every express company, or railroad company doing business in that city, and having a business extending beyond the limits of the State, to pay an annual license of $500; if the business was confined within the limits of the State, the license fee was only $100; if confined within the city, it was $50; subject in each case to a penalty for neglect or refusal to pay the charge. This court held that the ordinance was not unconstitutional. This was in December Term, 1872. In view of the course of decisions which have been made since that time, it is very certain that such an ordinance would now be regarded as repugnant to the power conferred upon Congress to regulate commerce among the several States.

[648] A great number and variety of cases involving the commercial power of Congress have been brought to the attention of this court during the past fifteen years which have frequently made it necessary to re-examine the the whole subject with care; and the result has sometimes been that in order to give full and fair effect to the different clauses of the Constitution, the court has felt constrained to recur to the fundamental principles stated and illustrated with so much clearness and force by *Chief Justice* Marshall and other members of the court in former times, and to modify in some degree certain dicta and decisions that have occasionally been made in the intervening period. This is always done, however, with great caution, and an anxious desire to place the final conclusion reached upon the fairest and most just construction of the Constitution in all its parts.

In our opinion such a construction of the Constitution leads to the conclusion that no State has the right to lay a tax on interstate commerce in any form, whether by way of duties laid on the transportation of the subjects of that commerce, or on the receipts derived from that transportation, or on the occupation or business of carrying it on, and the reason is that such taxation is a burden on that commerce, and amounts to a regulation of it, which belongs solely to Congress. This is the result of so many recent cases that citation is hardly necessary. As a matter of convenient reference we give the following list: *Case of State Freight Tax*, 82 U. S. 15 Wall. 232 [21:146]; *Pensacola Tel. Co.* v. *W. U. Tel. Co.* 96 U. S. 1 [24:708]; *Mobile County* v. *Kimball*, 102 U. S. 691 [26:238]; *W. U. Tel. Co.* v. *Texas*, 105 U. S. 460 [26:1067]; *Moran* v. *New Orleans*, 112 U. S. 69 [28:653]; *Gloucester Ferry Co.* v. *Pennsylvania*, 114 U. S. 196 [29: 158]; *Brown* v. *Houston*, Id. 622 [29:257]; *Walling* v. *Michigan*, 116 U. S. 446 [29: 691]; *Pickard* v. *Pullman Southern Car Co.* 117 U. S. 34 [29:785]; *Wabash, St. L. & P. R. Co.* v. *Illinois*, 118 U. S. 557 [30:244]; *Robbins* v. *Shelby County Taxing Dist.* 120 U. S. 489 [30:694]; *Philadelphia & S. M. Steamship Co.* v. *Pennsylvania*, 122 U. S. 326 [30:1200]; *W. U. Tel. Co.* v. *Pendleton*, Id. 347 [30:1187]; *Ratterman* v. *W. U. Tel. Co.* 127 U. S. 411 [*ante*, 229].

We may here repeat, what we have so often said before, that this exemption of interstate [649] and foreign commerce from state regulation does not prevent the State from taxing the property of those engaged in such commerce located within the State as the property of other citizens is taxed, nor from regulating matters of local concern which may incidentally affect commerce, such as wharfage, pilotage, and the like. We have recently had before us the question of taxing the property of a telegraph company, in the case of *Western Union Tel. Co.* v. *Massachusetts*, 125 U. S. 530 [31: 790].

The result of the conclusion which we have reached is, that *the judgment of the Supreme Court of Alabama must be reversed, and the cause remanded with instructions to reverse the judgment of the Mobile Circuit Court; and it is so ordered.*

EMMA C. D. NICKERSON, *Appt.*, [668]

v.

AZOR H. NICKERSON ET AL.

(See S. C. Reporter's ed. 668-677.)

Specific performance—when decreed—unreasonable delay—satisfactory proof—antenuptial agreement—insufficient evidence—trust.

1. Whether specific performance shall be decreed

in any case depends upon the circumstances of that case and rests in the discretion of the court.

2. Such discretion is not an arbitrary or capricious one, dependent upon the mere pleasure of the judge, but a sound and reasonable discretion, governed by general rules and principles.

3. In cases of this character relief should not be granted after an unreasonable delay, nor unless the proof is clear and satisfactory, both as to the existence of the agreement and as to its terms.

4. On a bill for specific performance of an antenuptial agreement, filed fifteen years after the marriage, where the allegations of the bill and the testimony of the complainant and her mother are flatly denied by the husband, and their depositions relating to the interview in which the alleged agreement was made contain strong internal evidence that the words "agreement," "promises," etc., were not used or understood by the witnesses in their technical legal sense, and their evidence in connection with all circumstances of the case, especially the lapse of time, must be regarded as establishing at most only an honest belief and expectation upon the part of the complainant and her mother, before and at the time of the marriage, superinduced by the general conduct or loose expressions of the defendant, that he intended at some time after marriage to provide his wife with a permanent home out of the proceeds of the sale of certain property then owned by him,—no such agreement is shown as can be specifically enforced.

5. Where it is alleged that an antenuptial agreement was made for the purchase of a home out of the proceeds of lands then owned by the husband, other property subsequently purchased by him cannot be reached on a bill for specific performance, unless it is proved with sufficient certainty that the latter property was purchased out of the proceeds of the former.

[No. 881.]

Submitted Jan. 6, 1888. Decided May 14, 1888.

APPEAL from a decree of the Supreme Court of the District of Columbia, dismissing a suit to declare void a conveyance and to establish certain trusts in respect to real estate and to compel a conveyance of the same. *Affirmed.*

The facts are stated in the opinion.

Messrs. **J. J. Johnson** and **W. W. Wilshire**, for appellant:

Notwithstanding the express language of the Statute of Frauds, a case may be taken out of its operation by fraud, or by a parol agreement and part performance.

Fry, Spec. Perf. ed. 1858, § 375; Bro. Stat. Fr. § 438; *Montacute* v. *Maxwell*, 1 P. Wms. 618; 1 Eq. Cas. Abr. 19; *Scott* v. *Scott*, 1 Cox, Ch. 366; *Redman* v. *Redman*, 1 Vern. 348; *Neville* v. *Wilkinson*, 1 Bro. Ch. 543, and cases cited; *Hammersley* v. *DeBiel*, 12 Clark & Fin. 45; *Maunsell* v. *White*, 4 H. L. Cas. 1039; *Surcome* v. *Pinniger*, 3 DeGex, M. & G. 571; *Barkworth* v. *Young*, 4 Drew. 1; *Jorden* v. *Money*, 5 H. L. Cas. 185; *Floyd* v. *Buckland*, Freem. Ch. 268.

A representation made by one party for the purpose of influencing another to solemnize a marriage, where the latter, relying upon such representations, solemnizes the marriage, will be sufficient to entitle him to the assistance of a court of equity for the purpose of realizing such representations.

Cookes v. *Mascall*, 2 Vern. 200; *Wanchford* v. *Fotherly*, Freem. Ch. 201; *Luders* v. *Anstey*, 4 Ves. Jr. 501; *Hodgson* v. *Hutchenson*, 5 Vin. Abr. 522; *Williams* v. *Williams*, 37 L. J. Ch. 854; *Durham* v. *Taylor*, 29 Ga. 166; *Glass* v. *Hulbert*, 102 Mass. 24; *Hatcher* v. *Robertson*, 4 Strobh. Eq. 179; *Sanford* v. *Atwood*, 44 Conn. 141; *Andrews* v. *Jones*, 10 Ala. 400; *Petty* v. *Petty*, 4 B. Mon. 215; *Southerland* v. *Southerland*, 5 Bush, 591; *Hafer* v. *Hafer*, 33 Kan. 449; *Green* v. *Green*, 34 Kan. 740.

Marriage is such an irretrievable change of situation that if procured by artifice, upon the faith that the settlement had been or that it would be executed, the other party is held to make good the agreement, and not permitted to defeat it by pleading the statute.

Hatcher v. *Robertson*, 4 Strobh. Eq. 179; *Sanford* v. *Atwood*, 44 Conn. 141; *Andrews* v. *Jones*, 10 Ala. 400; *Petty* v. *Petty*, 4 B. Mon. 215; *Lant's Appeal*, 95 Pa. 279; *Eldredge* v. *Jenkins*, 3 Story, 181; *Green* v. *Green*, 34 Kan. 740; *Porter* v. *Allen*, 54 Ga. 623; *Lowe* v. *Bryant*, 30 Ga. 528; *Cole* v. *Cole*, 41 Md. 301; *Crane* v. *Gough*, 4 Md. 316; 1 Bish. Mar. Wom. § 775.

The same equitable principle upon which courts of equity will enforce specific performance of a contract, notwithstanding the Statute of Frauds, are equally applicable for the enforcement of parol antenuptial agreements.

Williams v. *Morris*, 95 U. S. 456 (24:362); *Purcell* v. *Miner*, 71 U. S. 4 Wall. 513 (18:435); *Bradley* v. *Saddler*, 54 Ga. 682; *Houghton* v. *Houghton*, 14 Ind. 505; *Child* v. *Pearl*, 43 Vt. 224; *Tinkler* v. *Swaynie*, 71 Ind. 562; *Sweet* v. *Mitchell*, 15 Wis. 665; *Hussey* v. *Castle*, 41 Cal. 239; *Houston* v. *Townsend*, 1 Del. Ch. 422; *Demmes* v. *Worthington*, 38 Md. 298.

What constitutes part performance.

Coles v. *Pilkington*, L. R. 19 Eq. 174; *Jeston* v. *Key*, L. R. 6 Ch. 610; *Hafer* v. *Hafer*, 33 Kan. 449; *Green* v. *Green*, 34 Kan. 740; *Durham* v. *Taylor*, 29 Ga. 166; *Glass* v. *Hulbert*, 102 Mass. 24; *Hatcher* v. *Robertson*, 4 Strobh. Eq. 179; *Sanford* v. *Atwood*, 44 Conn. 141; *Wilber* v. *Paine*, 1 Ohio, 251.

The contract was executed.

Sanford v. *Atwood*, 44 Conn. 141; *Walker* v. *Walker*, 2 Atk. 98; *Mestaer* v. *Gillespie*, 11 Ves. Jr. 627.

The agreement of the appellee Nickerson created an implied trust in respect to real estate.

Story, Eq. Jur. 1195 *et seq.*, §§ 268, 272; Perry, Tr. § 208; *Hammersley* v. *DeBiel*, 12 Clark & Fin. 45; *Downes* v. *Jennings*, 32 Beav. 290; *Hunt* v. *Matthews*, 1 Vern. 408; *Walford* v. *Gray*, 11 Jur. (N. S.) 106; *Coverdale* v. *Eastwood*, L. R. 15 Eq. 122; *Saunders* v. *Cramer*, 8 Dr. & War. 87; *Laver* v. *Fielder*, 32 Beav. 1; *Moorhouse* v. *Colvin*, 15 Beav. 341.

A promise to marry, made in good faith, like an actual marriage, is a valuable consideration.

Conner v. *Stanley*, 65 Cal. 183; *Smith* v. *Allen*, 5 Allen, 458; *Wood* v. *Savage*, Walk. Ch. 471; 3 Pars. Cont. 29; 4 Kent. Com. 6th ed. 463.

Marriage is regarded as one of the strongest considerations in law, either to raise a use or found a contract, gift, or grant.

2 Pars. Cont. 71; *Holder* v. *Dickeson*, Freem. K. B. 96; *Smith* v. *Stafford*, Hob. 216; *Waters* v. *Howard*, 8 Gill. 262.

The Statute of Frauds is a personal defense, and cannot be interposed by strangers to the agreement.

Lavender v. *Hall*, 60 Ala. 214; *Cunningham* v. *Patton*, 6 Pa. 357; *McConnell* v. *Brillhart*, 17 Ill. 362; *Chicago Dock Co.* v. *Kinzie*, 49 Ill. 289; *Bohannon* v. *Pace*, 6 Dana, 194; *Sneed* v. *Bradley*, 4 Sneed (Tenn.) 301; *Ryan* v. *Tomlinson*, 39 Cal. 644; *Cowan* v. *Adams*, 10 Me. 382; *Rickards* v. *Cunningham*, 10 Neb. 417; *League*

v. *Davis*, 53 Tex. 9; *Norton* v. *Simonds*, 124 Mass. 19; *Anderson* v. *Simpson*, 21 Iowa, 404.

Messrs. **Enoch Totten, Henry Wise Garnett** and **Conway Robinson, Jr.,** for appellees:

The specific performance of contracts in equity is not a matter of absolute right.

Waters v. *Howard*, 1 Md. Ch. 112; affirmed in 8 Gill, 262; *Duvall* v. *Meyers*, 2 Md. Ch. 401.

Every agreement, to be specifically executed, must be fair, just, reasonable, *bona fide*, mutual and certain in all its parts.

Stoddert v. *Tuck*, 5 Md. 18, 28, 30.

Loose conversations are held not to be sufficient to establish a contract or agreement between the parties.

Lewis v. *Caperton*, 8 Gratt. 149; *Kesner* v. *Trigg*, 98 U. S. 51 (25:83); *Blow* v. *Maynard*, 2 Leigh, 49.

The celebration of the marriage is not such a part performance of the contract as takes it out of the statute.

Flenner v. *Flenner*, 29 Ind. 569; *Brown* v. *Conger*, 8 Hun, 627; *Crane* v. *Gough*, 3 Md. Ch. 128; *S. C.* 4 Md. 338; *Montacute* v. *Maxwell*, 1 P. Wms. 618.

A party to a parol contract or his privies can set up the Statute of Frauds against it.

Chicago Dock Co. v. *Kinzie*, 49 Ill. 293; *Bohannon* v. *Pace*, 6 Dana, 194; *Cunningham* v. *Patton*, 6 Pa. 358; *Ryan* v. *Tomlinson*, 39 Cal. 644, 645; *Rickards* v. *Cunningham*, 10 Neb. 420.

The complainant has been guilty of such laches that for this reason alone she is not entitled to any relief.

Holt v. *Rogers*, 33 U. S. 8 Pet. 433 (8:1000); *Dorsey* v. *Packwood*, 53 U. S. 12 How. 137, 138 (13:926); *McMillin* v. *McMillin*, 7 T. B. Mon. 567; *Strickland* v. *Fowler*, 1 Dev. & B. Eq. 629; *Nelson* v. *Hagerstown Bank*, 27 Md. 75; *Hertford* v. *Boore*, 5 Ves. Jr. 720.

Mr. Justice **Harlan** delivered the opinion of the court:

669] The substantial relief which the appellant, who was the plaintiff below, seeks in this suit is a decree (1) declaring void a conveyance executed May 31, 1883, by William B. Matthews, trustee, to the appellee, Lena D. Carter, by the name of Lena D. Nickerson, of lot two, in square one hundred and fourteen, in the City of Washington; (2) establishing, in behalf of the plaintiff, certain trusts in respect to said real estate; (3) and requiring Matthews and said Lena to convey the same to the plaintiff, or to trustees for the benefit of herself and the child of her marriage with the defendant, Azor H. Nickerson. Her bill asking such relief was dismissed with costs.

The case made by the bill is as follows:

The plaintiff, while on a visit to Portland, Oregon, in the year 1870, engaged herself to be married to the defendant Nickerson, then on duty in that city as an officer of the Army of the United States. Prior to such engagement, he pointed out to her blocks 145 and 146 in Couch's Addition to Portland as his property, and "promised and agreed" that after marriage he would convey them to her as a marriage portion or settlement for the benefit of herself and any children of their marriage, and erect thereon a dwelling house for their use; or, if she so elected, they would sell the blocks and invest the proceeds in other property in Portland, to be held upon like trusts, and, after having advanced in value, sold and the proceeds applied exclusively to the purchase of a house for the plaintiff and her children.

The plaintiff's mother, who resided in San Francisco, having been informed of this engagement, objected to the marriage upon the ground that the defendant was an officer of the army, without settled place of abode, or other means of support than his pay as such officer. But her objections, the bill states, were overcome by the defendant's verbal assurance to her to the following effect: That the question of support had been considered by the plaintiff and himself; that he was the owner of certain blocks of ground in the City of Portland, and that he had promised and agreed with the plaintiff that if she would marry him he would, immediately after marriage, convey them to the complainant as a marriage settlement, or would hold them as trustee for her separate benefit, [670] and if at any time sold, the proceeds should be invested in other property, to be held in like manner for the sole and separate benefit of the plaintiff and her children. Upon the strength of these promises and representations, and relying upon the good faith of the respondent Nickerson, and in consideration thereof, and for no other reason or consideration whatever, the plaintiff's mother, it is alleged, withdrew her objection, and consented to the marriage, which occurred on the 18th day of August, 1870. Without her mother's consent, the plaintiff avers, the marriage would not have taken place.

It is also alleged that the plaintiff, relying upon the love and affection of her husband, having confidence that he would, in good faith, keep and perform his agreement, and preferring that the property should be managed by him, without the complications necessarily arising from the interposition of third parties, did not require the lots to be conveyed to trustees for her benefit, but permitted the title to remain in the defendant, "subject to her equitable interests under said agreement."

About a month after the marriage the plaintiff and the defendant united in selling said blocks of ground, the proceeds being invested jointly with one John S. Walker in certain lots in Portland. Walker having died, a division of these lots was effected by judicial proceedings, which were concluded in 1878. In respect to the lots assigned in this division to the defendant, the bill alleges that they were held by him—although there were no writings between them on the subject—"for the sole and separate benefit of the complainant," and "as her trustee under the agreement, promise, and consideration" hereinbefore stated.

While the plaintiff was temporarily residing in Europe, under circumstances to be presently stated, the defendant sold the lots last described and transmitted deeds therefor to be executed by her. The bill states that, not doubting the affection of her husband or his good faith in keeping his agreement, and perceiving from the consideration mentioned in the deeds ($12,000) that the lots had sufficiently increased

[671] in value to enable him to carry out his promise to purchase a home for her and her child, the plaintiff executed the deeds—bearing the dates, respectively, of November 26, 1881, December 2, 1881, and January 10, 1882—and returned them to the defendant, with a letter "imploring him to be extremely cautious as to handling said money and in making proper reinvestments."

Instead of investing the moneys received for the lots in a house for the plaintiff and her child, the defendant, the bill charges, in execution of a purpose to deprive her of all benefit of said antenuptial agreement, invested $8,380 of the $12,000 in lot two in square one hundred and fourteen in Washington, which he caused to be conveyed to the defendant Matthews, as trustee, with power to make title to the premises as the defendant Nickerson might direct, and without the necessity of plaintiff's uniting in any conveyance that said trustee might make.

This purchase and arrangement, the bill alleges, was one step in a conspiracy formed by her husband with the defendant, Miss Carter, some time in the year 1880—and to which conspiracy the defendant Matthews subsequently became a party—for the purpose of defrauding the plaintiff of her interest in the proceeds of the sale of the Portland property, for the benefit of said Carter, to whom he was to be married after being divorced from the plaintiff; that as the initial step in that conspiracy, her husband represented to her in July, 1880, that he was much in debt, and that it would be in the line of economy if she would reside for a time in Europe, where the cost of living was slight, and the facilities for educating their daughter abundant; that, although unwilling to be separated from her husband, she assented to his wishes, and, with her daughter, sailed for Europe on the 9th of July, 1880, her husband accompanying them to the steamer, and parting from her with every manifestation of love and affection; that, immediately after her departure for Europe, the defendant went to Philadelphia, and there rented rooms for the purpose of acquiring a pretended residence as a basis of proceedings for divorce in one of the [672] courts of that city; that, after the expiration of the statutory period, to wit, on the 2d of May, 1882, while the plaintiff was still in Europe, he filed a libel for divorce, and, by means of false and perjured testimony, and without her knowledge or consent, obtained, March 31, 1883, a decree of divorce from her; that of the institution of said suit and of said pretended decree the defendants Carter and Matthews had knowledge; and that, as soon as plaintiff was informed of those proceedings she returned to this country, and, in a suit brought for that purpose, she obtained, on the 9th of June, 1883, a judgment annulling the decree of divorce as having been procured by fraud and perjury.

The bill further charges that on the 2d of April, 1883, two days after said pretended divorce, her husband and Miss Carter went to the City of Baltimore, and were there married; that, on the 31st of May, 1883, he directed Matthews to convey and he did convey to said Carter, by the name of Nickerson, his title and interest in lot two in square one hundred and fourteen, said Matthews and Carter, as well as her husband, being aware, at the time, of the pendency of the suit in Philadelphia to set aside the fraudulent decree of divorce; and that on the day last named her husband executed to said Lena a bill of sale of all his personal property in the City of Washington, including the household furniture which the plaintiff and her husband used in common prior to her going to Europe.

All of these acts, the bill charges, were in execution of a conspiracy between her husband and the defendants Matthews and Carter for the following purposes: (1) To get the plaintiff out of the country, beyond the reach and knowledge of what was going on; (2) to have the plaintiff divorced from her husband, so that he could marry the defendant Carter; (3) to defeat the trusts upon which her husband held the Portland property and the proceeds of its sale, and to place the right and title to the same in the defendant Carter.

The defendants Nickerson, Matthews and Carter, in separate answers, deny every material allegation in the bill relating to them respectively; except, that the marriage of the latter with Major Nickerson, at the time and place stated in the bill, is admitted. They also [673] severally plead, in bar of the relief sought, the Statute of Frauds of both the State of Oregon and the District of Columbia.

The Statutes of Oregon provide:

"§ 771. No estate or interest in real property other than a lease for a term not exceeding one year, nor any trust or power concerning such property, can be created, transferred, or declared otherwise than by operation of law or by a conveyance or other instrument in writing subscribed by the party creating, transferring, or declaring the same, or by his lawful agent, under written authority, and executed with such formalities as are required by law."

"§ 775. In the following cases the agreement is void unless the same, or some note or memorandum thereof, expressing the consideration, be in writing and subscribed by the party to be charged, or by his lawfully authorized agent; evidence, therefore, of the agreement shall not be received other than the writing, or secondary evidence of its contents in the cases prescribed by law:

"1. An agreement that, by its terms, is not to be performed within a year from the making thereof.

"4. An agreement made upon consideration of marriage, other than a mutual promise to marry.

"6. An agreement for the leasing for a longer period than one year, or for the sale, of real property or of an interest therein.

"7. An agreement concerning real property made by an agent of the party sought to be charged, unless the authority of the agent be in writing."

Oregon Code Proc. 1862 (1863); pp. 190, 191, title VIII, §§ 771, 775; Gen. Laws Oreg. (1845-1864), pp. 341, 342, title VIII, §§ 771, 775; Gen. Laws Oreg. (1843-1872), pp. 264, 265, title VIII, §§ 771, 775.

The statutes upon which the defendants rely as being in force in the District of Columbia, and as applicable to the case, provide:

"§ 4. No action shall be brought whereby to

[674] charge * * * any person upon any agreement made upon consideration of marriage, or upon any contract or sale of lands, tenements, hereditaments, or any interest in or concerning them, or upon any agreement that is not to be performed within the space of one year from the making thereof, unless the agreement upon which such action shall be brought, or some memorandum or note thereof, shall be in writing and signed by the party to be charged therewith, or some other person thereunto by him lawfully authorized."

"§ 7. And * * * all declarations or creations of trust and confidence, of any lands, tenements, or hereditaments shall be manifested and proved by some writing, signed by the party who is by law enabled to declare such trust, or by his last will in writing, or else they shall be utterly void and of none effect." 29 Charles II, 2 Ch. 3, §§ 4, 7; Alexander's British Stat. p. 509.

We are not permitted by the evidence in this cause to doubt that the appellee Nickerson induced his wife to go to Europe, with her child, in order that he might, in her absence and without her knowledge, procure a decree of divorce from a court having no jurisdiction to grant it; or that, without her knowledge, he obtained such decree from the court in Philadelphia—in which city he acquired a merely fictitious residence—by making it appear that his wife had deserted him, and taken up her residence in Europe against his wishes, when in fact, he induced her to go abroad, substantially directed all of her movements while away, and, in frequent letters, covering the entire period from the date of her departure up to the institution of the suit for divorce, expressed warm affection for his absent wife. Indeed, a few weeks after he commenced his suit for divorce, he inclosed to his wife a draft for one thousand marks to cover her future expenses; his letter, transmitting the draft, being couched in such language as a faithful husband would use when communicating with his wife by letter. Nor can it be doubted that before the rendition of the decree for divorce, an understanding was reached between him and Miss Carter that they would intermarry as soon as he obtained a decree divorcing him from his wife. It is difficult to conceive of a clearer case of [675] wrong and perjury than is disclosed in the record upon the part of Major Nickerson towards his wife in reference to the proceedings instituted by him for divorce. If our decision depended upon the facts just stated, we should have no hesitation in granting the relief the appellant seeks. But the court would be unmindful of its duty to administer justice according to the settled rules of law, if it permitted the feelings naturally excited by the conduct of the husband in relation to that divorce, to control its investigation of the primary question, whether there was between him and his wife, prior to and at the time of the marriage, and as the consideration of the marriage, such an agreement as that set out in the bill; and, if so, whether the agreement is of such nature, or has been so clearly established, as to authorize a court of equity to give the relief asked. It is entirely consistent with the perfidy practiced by the husband towards the wife, in the matter of the fraudulent divorce, that no such agreement as that alleged was ever made, as the consideration of their marriage. If such an agreement was not made, or supposing it to have been made, if it cannot, under the circumstances and the proof, be properly made the basis of a decree affecting the ownership of the lot conveyed by Matthews to the appellee Carter, the legal result cannot be changed by the fact that the husband, many years after the marriage, and by means of false evidence, obtained a divorce from his wife.

Even if the Statutes of Oregon, where the agreement is alleged to have been made, or the Statutes of Maryland, in force in this District, do not prevent relief being given in cases of fraud practiced by a defendant pleading the Statute of Frauds, or when part performance is relied upon to take the case out of the statute, we are constrained to hold, upon a careful scrutiny of all the evidence, that the proof of the existence of the agreement is not of that satisfactory character required by the recognized principles of equity. Whether specific performance shall be decreed in any case depends upon the circumstances of that case, and rests in the discretion of the court. *King* v. *Hamilton*, 29 U. S. 4 Pet. 328 [7: 875]; *Willard* v. *Tayloe*, 75 U. S. 8 Wall. 564 [19:503]; *Waters* v. *Howard*, 1 Md. Ch. 112; *Duvall* v. *Meyers*, 2 Md. Ch. 401. "Not, indeed," *Mr. Justice* Story [676] says, "of arbitrary or capricious discretion, dependent upon the mere pleasure of the judge, but of that sound and reasonable discretion which governs itself as far as it may by general rules and principles; but at the same time which withholds or grants relief, according to the circumstances of each particular case, when these rules and principles will not furnish any exact measure of justice between the parties." 1 Story, Eq. Jur. § 742. One of these rules is, that in cases of this character, relief should not be granted after an unreasonable delay, or unless the proof is clear and satisfactory, both as to the existence of the agreement and as to its terms.

In our judgment the proof fails to show such an agreement between Nickerson and wife as could be made the basis of a decree in her behalf. The allegations of the bill are expressly denied by the answer; and the statements of the wife in her deposition are flatly contradicted by the husband in his deposition. The only other witness in the cause in behalf of the plaintiff is her mother, and the deposition of the latter was not taken until nearly fifteen years after her daughter married the defendant. It contains a detailed account of an interview with him at the time she visited Portland, in the spring of 1870, for the purpose of personally expressing her opposition to the marriage of her daughter to Major Nickerson. In recalling what then passed between herself and him, she was not aided by any contemporaneous memorandum of what occurred. It is true that in her deposition, as well as in that of the appellant, are to be found such words and phrases as "agreement," "promised," "promised and agreed," "promise and agreement," "understood and agreed," "in consideration of marriage," and "marriage settlement and gift." But there is strong internal evidence in the deposition that these words and phrases—

if not suggested by others familiar with their import—were not used or understood by the witnesses in their technical legal sense. Their evidence, in connection with all the circumstances of the case, especially the lapse of time, should be regarded as establishing at most, only an honest belief and expectation upon the part of the appellant and her mother, before and at the time of the marriage, superinduced [677] by the general conduct or loose expressions of the defendant, that he intended, at some time after marriage, to provide his wife with a permanent home out of the proceeds of the sale of the Portland property. It is the case of a husband, who, prior to marriage, induced in the mind of his intended wife expectations in reference to real property which, after marriage, he failed to meet, but in respect to which property he did not enter—and, perhaps, intentionally refrained from entering—into any distinct and binding agreement.

She purposely forebore, as her bill shows, from having the Portland property conveyed to trustees for her benefit, and permitted the title to remain in the husband, in order that it might be easily handled, and in the belief that he would act in good faith toward her. She relied upon his honor, and has been deceived. But those facts, however strongly they appeal to our sympathy, cannot justify the court in finding, upon the meager evidence in this cause, that there was an *agreement* upon his part, in consideration of marriage to settle upon her either the property in Portland, or the property purchased with the proceeds of its sale.

There is another serious obstacle in the way of granting to the appellant the relief she seeks. It is not proved, with sufficient certainty, that any part of the proceeds of the Portland property was, in fact, applied to the purchase of the lot in square one hundred and fourteen. If it was not, there is no ground, in any view of the case, upon which a trust could be fastened upon that lot for the benefit of the appellant.

In view of what has been said it is unnecessary to consider the question, so fully discussed by counsel, and so elaborately examined in the adjudged cases, as to whether marriage itself, standing alone, can be deemed part performance of an agreement as to lands, which otherwise could not be enforced with due regard to the letter and spirit of the Statute of Frauds.

Upon the whole case, we feel bound to hold that the appellant has not established sufficient grounds for the relief asked, and *the decree must be affirmed.*

END OF REPORTED CASES IN VOL. 127.

FOLLOWING ARE MEMORANDA

OF

ALL CASES DISPOSED OF AT OCTOBER TERM, 1887,

WITHOUT OPINIONS, AND NOT ELSEWHERE OR OTHERWISE REPORTED FOR THIS TERM.

1] *Ex Parte:* In the Matter of H. S. BURDETT *et al., Petitioners.*

Mandamus—power to issue.

Where the amount in controversy in a suit in the Circuit Court of the United States is too small to come to this court by writ of error, this court has no power, by writ of mandamus, to compel the judge of that court to set aside the judgment which he rendered.

[Orig.]

Submitted April 9, 1888. Decided April 16, 1888.

Petition for a writ of mandamus to the Judges of the United States Circuit Court for the Eastern District of Michigan. The petition set forth that the petitioners commenced in said circuit court an action in replevin against Benjamin F. Doty *et al.*, for the recovery of certain goods 2] fraudulently purchased by defendants of the plaintiffs; that the value of the goods was $653.38, and that the amount actually in dispute in said action did not exceed, exclusive of interest and costs, $2,000; that said suit was commenced before the promulgation of the Act of March 3, 1887, increasing the limit of jurisdiction of the circuit courts to $2,000 and without knowledge of such Act; that defendants pleaded the general issue and the cause was placed upon the docket for trial and, it having been made to appear to the court that the amount in dispute in said cause did not exceed $2,000, said court dismissed said cause for want of jurisdiction; that afterwards said court, upon defendants' motion, made an order requiring said plaintiffs to return to defendants the property seized under the writ of replevin and defendants thereupon having waived a return of the property, said court thereupon ordered an assessment of damages by a jury for the value of said property irrespective of plaintiffs' right or ownership therein; that plaintiffs objected to said order when applied for, on the ground that said court had no authority to make the order, the cause having been previously dismissed for want of jurisdiction; that afterwards the plaintiffs moved said court to vacate said order on the grounds that the court had no jurisdiction in said cause and had dismissed the cause for want of jurisdiction, and had no power to make the order, and that the court proposed to assess the damages without allowing plaintiffs to show that defendants are not the owners of and have no interest in said property and were not damaged by its seizure; that the plaintiffs had the right to retake the property on account of the fraudulent purchase thereof and that, on the dismissal of the suit for want of jurisdiction, defendants were not entitled to a judgment beyond their actual right or interest in the property, and that the court denied plaintiffs' right to show that defendants were not the owners of the property and had no interest therein. The prayer of the petition was for a mandamus requiring the circuit court to set aside said order for a return of the property or an assessment of its value, and that a writ of prohibition be issued restraining said circuit court from further proceedings in the suit.

Mr. Levi T. Griffin, for petitioners:

The amount in dispute did not exceed $2,000. The circuit court therefore had no jurisdiction of the suit.

Act March 3, 1887; U. S. Rev. Stat. § 639 *c.*

The court, having dismissed the cause for want of jurisdiction could not retain jurisdiction, for the purpose of assessing the value of the property and rendering a judgment for its value and issuing process to collect it. The court not having possession of the property could not order it to be returned.

Parsell v. *Genesee Circuit Judge*, 39 Mich. 542; *Humphrey* v. *Bayn*, 45 Mich. 566.

The statutes of Michigan cannot confer jurisdiction upon the courts of the United States. The statute of the United States adopts the procedure of the respective States only when there is jurisdiction in the court.

Gray v. *Dean*, 136 Mass. 128; *Jordan* v. *Dennis*, 7 Met. 590; *Josslyn* v. *Phillips*, 27 Fed. Rep. 481; *Cooper* v. *New Haven Steamboat Co.* 18 Id. 588; *Mayor* v. *Cooper*, 6 Wall. 250; *Burnham* v. *Rangely*, 2 W. & M. 417.

Where there is no jurisdiction in the court to determine the litigation, the cause must be dismissed and the court can render no judgment for or against either party even for costs.

Mansfield R. Co. v. *Swan*, 111 U. S, 379.

Mail Company v. *Fernandez*, 12 Wall. 130-136, will not be found to support the order.

Under the provisions of the Michigan statute (How. Stat. § 8352) no suit is maintainable upon the replevin bond until the writ of execution issued in favor of the defendant shall be returned unsatisfied in whole or in part.

Williams v. *Vail*, 9 Mich. 162; *Phillips* v. *Waterhouse*, 40 Mich. 273.

Defendants are not entitled under the Michigan statute and decisions, to a judgment for a return of the property, or for its value, unless they are the owners of that property, or have an interest in it.

If the court is allowed to entertain jurisdiction to assess damages, then, at the same time, it would seem only equitable to permit the plaintiffs to show that the defendants have actually sustained no damages.

Darling v. *Tegler*, 30 Mich. 54; *Webber* v. *Henry*, 16 Mich. 399; Mich. Stat. 71, §§ 6754-

6759; How. Stat. §§ 8342–8347; *Scott* v. *Scott*, 50 Mich. 372.

A mandamus and the writ of prohibition should issue.

McLean v. *Wayne Circuit Judge*, 52 Mich. 257.

[773] *Mr. Justice* **Miller** announced the decision of the court as follows:

A petition on the part of H. S. Burdett and others, asking for a mandamus against the Judge of the Circuit Court of the United States for the Eastern District of Michigan, has been presented to us. The case arises out of an action of replevin in which the circuit court decided that it had no jurisdiction. A proceeding was then had to get damages for the taking of the goods in replevin, which the court entertained and rendered judgment for the damages. The amount in controversy is too small to come to this court by writ of error, and we are asked by the writ of mandamus to direct the judge of that court to set aside the judgment which he rendered. Whether there was error in that matter or not, we do not think that we have any power by writ of mandamus to compel the judge of that court to reverse his own judgment.

---

[764] WILLIAM CRAIG'S EXR., *Appt.*, *v.* THOMAS LEITENSDORFER'S ADMR.

Attachment for costs.

This court may, and should, as against persons who have intervened in a cause as grantees of a party, and who have given bonds to pay the costs, enforce the payment of such costs against such interveners and their sureties, by attachment, without remitting the payees in the bonds to another suit in another court.

[No. 1.]

Submitted April 23, 1888. Decided May 14, 1888.

Motion to require the payment of costs by persons who had intervened in a cause and had given bonds for costs. *Motion granted.*

This motion is made in the case of *Downs*, Executor of William Craig, Deceased, v. *Hubbard*, Administrator of Thomas Leitensdorfer, Deceased, decided at the present term and reported at page 114 *ante*.

Leann S. King and Thomas J. Allen, by order of this court made 18th January, 1886, were permitted to be heard in said cause, as "persons who claimed to have acquired title to the premises in dispute, or to some part thereof, from or through the appellee, since said suit was begun," on condition that each should file a stipulation in the cause with security to the satisfaction of the clerk to pay all costs and expenses, accruing on said appeal since the last term of the court, that may be finally adjudged against the appellee, including the cost of printing the record and clerk's fees for supervising. Said King and said Allen each filed such stipulation with bonds, or instruments of security duly executed by each, with sureties. Judgment was rendered by this court in this case in favor of the appellant, with costs against the appellee, and the costs, since the October Term of 1884, including the costs of printing the record and the clerk's fees for supervising, which costs, amounting to $1,115.02 as taxed by said clerk, and for the payment of which said Allen and King and their sureties were jointly and legally bound, are due and unpaid, although duly taxed; of all of which said King and said Allen had notice, but neither of them has paid said costs, or any part thereof, or filed with said clerk any reason why they should not so do.

Wherefore the appellant moves the court here to estreat said instruments of security for said costs, and order judgment to be entered thereon as taxed by said clerk, and proper process of attachment to issue against all said persons, jointly and severally.

The facts are further stated in the decision.

Messrs. Benj. F. Butler and *O. D. Barrett* for the motion.

Mr. Charles W. Hornor for Thomas J. Allen in opposition:

The legal relation of King and Allen to the motioner, and their legal relation *inter se*, is one of suretyship. The instruments of suretyship are several and independent. The obligors are all in the same position.

Deering v. *Winchelsea*, 2 Bos. & Pul. 273.

The creditor who can call upon all shall not be at liberty to fix one with the payment of the whole debt.

Graythorn v. *Swinburne*, 14 Ves. 165; *Whiting* v. *Burke*, L. R. 10 Eq. 538, L. R. 6. Ch. 341; *McDonald* v. *Magruder*, 3 Pet. 478; *Phillips* v. *Preston*, 5 How. 278.

Upon this principle the recent decisions seem to be based.

Railway v. *Swan*, 111 U. S. 379; *Hancock* v. *Holbrook*, 112 Id. 229; *Union Trust Co.* v. *Illinois Midland Co.* 117 Id. 434–481; *Peper* v. *Fordyce*, 119 Id. 469. In all these cases the costs were divided.

Equality is equity; and costs, both at law and in equity, are entirely discretionary.

Story v. *Livingston*, 13 Pet. 359.

An attorney who purchases property of his client *pendente lite* cannot be a *bona fide* purchaser.

Gay v. *Purpart*, 106 U. S. 679; *Stockton* v. *Cord*, 11 How. 246; Hoffm. 24th Rule of Professional Deportment, Course of Legal Study, Vol. 2, p. 760, where the distinction between such sales and contingent fees is fully stated.

Mr. Justice **Miller** delivered the following [770] decision:

An application was made in this case last Monday, for a compulsory process against Mrs. Leann S. King and Thomas J. Allen, and sureties, who signed two bonds for costs in this case.

The circumstances of the case are about these: Craig and Leitensdorfer had been litigating for an immense tract of land in Colorado, and the case had come here by appeal in behalf of Craig against the judgment of the circuit court. Shortly after it got here, Craig made an arrangement with Leitensdorfer, or with his executor (for he died during the progress of this long litigation) by which the case was to be closed up by a consent decree in favor of Craig, or his representatives. He presented that agreement to this court, and asked to have it enforced. At that time Mrs. King and Mr. Allen interposed by their counsel, and protested against this dismissal, saying that they had bought Leitensdorfer's claim, or parts

[771] of it, before he had made this arrangement, and to enforce it would prejudice them. That motion was heard in this court long enough to have settled a common case. The court said to these parties, if each of you will enter into bonds to pay all costs from this time forward to be adjudged against you, or the appellee, you shall be permitted to intervene and be heard. They were heard, and they made all the defense that was made against Craig's claim. In October last this court decided the case in favor of Craig, and against Leitensdorfer's representatives. The costs were taxed by the clerk, and these parties have neglected to pay them. We are of opinion that they must pay them, and we are of opinion that this court has power, and it is its duty, to enforce the payment without remitting the payees in these bonds to another suit in some other court. We, therefore, make an order that an attachment issue against Mrs. King and her sureties, and Mr. Allen and his sureties, to compel payment of the amount of the taxed costs, unless they do pay it before the last day of this term.

This is a new question, and a more elaborate opinion may be submitted before the end of the term, but this order is made now because the parties ought to have an opportunity to pay, and we make the order now that they pay the costs, and that a writ of attachment issue if they do not pay before the end of this term.

It is proper to observe that if the money is not paid the writ of attachment will be returnable to the next term of the court.

---

[774] CLARENCE P. HUNT *v.* SALLIE S. BLACKBURN *et al.*

Motion to reinstate cause.

This case, having been dismissed by the court, *sua sponte*, because there was no evidence of jurisdictional amount, and a motion being made to reinstate the case on unsatisfactory affidavits as to value, and the opposite party not having had opportunity to produce counter affidavits, the court orders the motion continued until the next term with leave to either party to file additional affidavits.

[No. 199.]

Submitted April 2, 1888. Dismissed April 9, 1888. Motion to reinstate, April 26, 1888. Motion ordered continued April 30, 1888.

Appeal from the District Court of the United States for the Eastern District of Arkansas.

Mr. J. B. Heiskell, for appellant.

No counsel appearing for appellees.

Mr. Justice **Miller** announced the decision:

After an examination of the record in this case, which was submitted on printed arguments, we have not been able to find any evidence of the value of the land in controversy, which is the subject of this suit. It is therefore *dismissed for want of jurisdiction.*

[775]

Mr. J. B. Heiskell, in support of the motion to reinstate, for appellant, presented affidavits of the value of the property in dispute and made the following points:

In the case of the *Pittsburgh etc. R. R. Co.* v. *Ramsey*, 22 Wall. 322, the court, from the conduct of the parties, the record being lost and only imperfectly supplied, presumed the facts to give jurisdiction.

The case is cited and approved in *Bridges* v. *Sperry*, 95 U. S. 401, where the facts did not appear, but the record not being complete, the court presumed that the facts had been made to appear.

Again, in *Robertson* v. *Cease*, 97 U. S. 646, this court remanded a cause, with leave to the plaintiff to amend, so as to show the jurisdictional facts.

This last case is cited in *Bors* v. *Preston*, 111 U. S. 263.

That case cites *Morgan* v. *Gay*, 19 Wall. 81 (86 U. S.) as the precedent for this remand with leave to amend. This case was, however, preceded by *Ex parte Bradstreet*, 7 Pet. 647, and in this last named case the right of the party to give evidence here is expressly recognized by the court.

The court will not avail itself of any such defect or omission to the prejudice of justice.

In the cases of *Wells* v. *Wilkins* and *Johnson* v. *Wilkins*, 118 U. S. 230 and 228, the court deny the motion on the ground of delay. But here we have come on the second motion day after dismissal. A case will be postponed to give opportunity to file affidavits.

The Grace Girdler, 6 Wall. 441.

No appearance for appellees.

Mr. Justice **Miller** announced the decision as follows:

This case was dismissed by the court on April 9, 1888, because there was no evidence of there being a sufficient amount in controversy to give this court jurisdiction. A motion is now made to reinstate it, and affidavits submitted on the part of the appellant intended to show that the value of the land in controversy is over $5,000. Although notice was given to the opposite party by telegraph, there has been no sufficient opportunity or time for them to produce counter affidavits, nor are we entirely satisfied with the sufficiency of those produced by the appellant. This motion to reinstate the case is, therefore, continued until the next term of the court, with leave for either party to file additional affidavits on the subjects.

REUBEN P. SEGRIST *et al.*, *Plffs. in Err.*, *v.* WILLIAM B. CRABTREE, *Deft. in Err.* [773]

Service of citation.

That the citation was served and made returnable less than thirty days after the writ of error was granted is not a sufficient ground to dismiss such writ.

[No. 386.]

Submitted April 9, 1888. Decided April 16, 1888.

In error to the Supreme Court of the Territory of New Mexico. Motion to dismiss on ground that citation was not served thirty days before the return day of the writ. *Motion denied.*

Mr. J. G. Zachry, for the motion:

The citation in this case was made returnable on the second Monday in October, 1885. Service was had on the attorneys for Crabtree on September 16, 1885. The time intervening between the date of service and the return of the citation was less than thirty days, and the notice to the defendant in error, Crabtree, was not sufficient. U. S. Stat. § 999. [774]

Mr. O. D. Barrett, in opposition:

The facts stated in the motion show that plaintiffs in error have fully complied with the fifth section of the eighth rule of this court, which simply provides that the citation be served before the return day of the writ. It was so served.

Mr. Justice **Miller** announced the decision as follows:

This is a motion to dismiss, the ground for which is that the citation was served and made returnable less than thirty days after the writ was granted. We do not think that is a sufficient ground to dismiss the writ of error, whatever may be the ground for relief.

---

[775] ALFRED MARCHAND, *Plff. in Err.*, *v.* JOSEPHINE A. LIVAUDAIS, Wife of Chas. Lafitte, *Deft. in Err.*

Motion to dismiss.

Where, in an action in the U. S. Circuit Court in Louisiana, against a wife and her husband, upon notes made by her, a judgment was rendered against the plaintiff, who thereupon sued out a writ of error to this court, to which writ the wife alone is made a party and a citation has been served on the husband,—*Held*, that the citation to him is sufficient to bring him here to aid his wife in the writ of error, and a motion to dismiss the case is denied.

[No. 1077.]

Submitted Jan. 4, 1888. Decided April 16, 1888.

Error to the Circuit Court of the United States for the Eastern District of Louisiana. Motion to dismiss. *Denied.*

Alfred Marchand, plaintiff in error here, brought an action at law against the defendant, Josephine A. Livaudais, and her husband, Charles Lafitte, declaring upon certain notes alleged to have been executed by Mrs. Lafitte, with the authority and consent of her husband. The husband was an absolutely necessary party to this suit, under article 118 of the Code of Practice of Louisiana. A verdict and judgment was rendered against the plaintiff, who sued out a writ of error to this court to which writ the wife alone is made a party. She alone is named in the writ as the party defendant. She alone was cited in error, and she alone is named in the bond given to perfect the writ of error.

The present motion was heretofore made in this cause to dismiss the writ of error herein contained; but as the record was not then printed, this court denied the same, with leave to the mover to renew it. After this order was entered by this court, the plaintiff in error appeared in the United States Circuit Court for the Eastern District of Louisiana and presented to that court a petition asking leave to cite Charles Lafitte, the husband of the defendant. This petition was *ex parte* and without any notice to opposite counsel.

The citation in error was issued direct to Charles Lafitte, was served upon him, and the plaintiff in error has brought a copy of that petition and citation and filed same in this court, asking leave to make the same a part of the record herein, which motion the court did not allow.

Messrs. Edgar H. Farrar and *Ernest B. Kruttschnitt*, for defendant in error in favor of motion:

It was just as necessary to make the husband a party defendant to the writ of error as it was to make him a party defendant on the original record.

Lanoue v. *Reed*, 7 La. 112; *Wells* v. *Scott*, 10 Id. 401; *Laurence* v. *Burris*, 12 La. Ann. 843.

The citation of the husband under the circumstances mentioned in the above statement cannot avail the plaintiff in error.

Messrs. C. W. Hornor and *W. S. Benedict*, for plaintiff in error in opposition:

The notes being duly executed in conformity to the Louisiana Statute are binding on the wife and have the same effect as if made by a "*feme sole.*"

Rev. Stat. La. 1870, p. 481, §§ 2432, 2433, 2434; La. Code of 1870, arts. 126, 127, 128.

This statute governs the case. It constitutes the married woman a *feme sole.*

The husband's authorization to his wife to defend was absolutely needless.

Stewart v. *Boyle*, 23 La. Ann. 88.

The fault is not fatal.

R. S. U. S. 1005; *Gumbel* v. *Pitkin*, 113 U. S. 545, and cases there cited.

The husband is not made a party to this motion.

Fairex v. *Bier*, 37 La. Ann. 821.

Mr. Justice **Miller** announced the following decision: [776]

A motion is made to dismiss this cause because Charles Lafitte, the husband of the defendant in error, is not named in the writ of error, as a party to the proceedings. The judgment was in favor of his wife Josephine, and he was a party authorizing her in the suit below, according to the forms of the Louisiana law, which require that the husband must be joined with the wife when she sues, whether he has any interest or not; and the plaintiff in error has served a citation on Lafitte, although he was not named in the writ of error. It may be doubtful whether Lafitte is a necessary party in this court, seeing he was not a party to the judgment. If for conformity's sake he ought to have been brought here to aid his wife in the writ of error, the citation to him is sufficient for that purpose.

The motion to dismiss the case is overruled.

WESTERN AIR LINE CONSTRUCTION CO., *Plff. in Err.*, *v.* WILLIAM A. MCGILLIS *et al.*, *Defts. in Err.* [776

Writ of error—when not supersedeas.

1. A writ of error which is not sued out nor served within sixty days after the rendition of the judgment, which is the subject of the writ, does not operate as a supersedeas.

2. Where a writ of error does not operate as a supersedeas, no motion to vacate supersedeas or for an order declaring that the writ does not operate as such, is necessary or proper. It is a matter of law whether it operates as a supersedeas.

[No. 1288.]

Submitted April 9, 1888. Decided April 16, 1888.

In error to the Circuit Court of the United States for the Northern District of Illinois. Motion to vacate supersedeas or for an order

declaring that the appeal bond filed does not operate as a supersedeas. *Motion denied.*

Mr. John S. Cooper, for the motion:

The service of a writ of error or the perfection of an appeal within sixty days after the rendering of the judgment or decree is an indispensable prerequisite to a supersedeas.

Kitchen v. *Randolph*, 93 U. S. 92.

Mr. E. Walker, in opposition:

There is no supersedeas in this cause and nothing in the motion of the defendant in error that the court can act upon.

Tiernan v. *Booth*, 9 Biss. 499; *Goddard* v. *Ordway*, 94 U. S. 672.

[777] *Mr. Justice* **Miller** announced the decision, as follows:

This is a motion to vacate what is called a supersedeas. The papers show that the writ was neither sued out nor served within sixty days after the rendition of the judgment which is the subject of the writ of error. It follows as a matter of course that the writ cannot operate as a supersedeas, and we know of no motion that is necessary or proper in this court on that subject. Writs of supersedeas do not issue, unless it may become necessary from some peculiar circumstances. The statute declares that, when, within sixty days, the plaintiff sues out his writ of error, files it with the clerk of the proper court, and then gives a bond, within a certain time mentioned by the statute, that the bond, if approved for that purpose by the judge who grants the citation and the writ of error, shall operate as a supersedeas. It is a matter of law whether it operates as a supersedeas.

There is no evidence here of any proceeding to collect a debt which has been disregarded. At all events there is no occasion for a supersedeas. *The motion is denied.*

FRANCIS DOWNS, Exr., etc., *v.* E. J. HUBBARD, Admr., etc. [No. 1.]

Appeal from C. Ct. of U. S. for Dist. of Colorado.

April 30, 1888. On consideration of the motion for an attachment against Leann S. King, as principal, and Charles F. R. Hayward and Andrew D. Wilson, as sureties, and Thomas J. Allen, as principal, and John N. Smith and Charles R. Lockridge, as sureties, on two certain bonds given for costs in this court in this cause, and of the arguments of counsel thereupon had as well in support of as against the same, It is now here ordered by the court that the persons above named pay the taxed costs in this cause which have accrued since said bonds were approved, amounting to the sum of $1,106.65, on or before the 14th day of May, 1888; and unless this sum is so paid, a writ of attachment against them will issue returnable on the first day of the next term of this court.

---

[783] *Ex Parte:* In the Matter of ALBERT GRANT, *Petitioner.* [No. 2, Orig.]

Petition for a writ of mandamus.

Messrs. B. F. Butler, S. S. Henkle, William Lawrence and *H. W. Blair*, for the petitioner. No one opposing.

Dec. 19, 1887. Dismissed for the want of prosecution.

GORDON MCKAY *et al.* Trustees, etc. *v.* EDMUND M. STOWE *et al.* [No. 9.] [786]

Appeal from C. Ct. of U. S. for Dist. of Mass.

Mr. Elias Merwin, for appellants. *Mr. J. E. Maynadier*, for appellees.

Oct. 18, 1887. Dismissed as per stipulation.

HUGH T. MURRAY *et al.* *v.* JAMES K. PARDEE. [No. 13.] [787]

In error to Supreme Ct. of Montana.

Mr. E. W. Toole, for plaintiffs in error. No counsel for defendant in error.

Oct. 18, 1887. Dismissed with costs pursuant to the 19th Rule.

KANSAS PACIFIC R. CO. *v.* BENJAMIN W. LEWIS, JR. [No. 14.] [784]

Appeal from C. Ct. of U. S. for Dist. of Kan.

Messrs. Samuel Shellabarger, J. P. Usher, John F. Dillon, and *J. M. Wilson*, for appellant. No counsel appeared for the appellee.

Nov. 3, 1887. Submission of this cause set aside and appeal dismissed with costs, on appellant's motion.

BALTIMORE AND POTOMAC R.R.CO. *v.* DISTRICT of COLUMBIA. [No. 35.] [780]

In error to Supreme Ct. of Dist. of Col.

Mr. Henry E. Davis, for defendant in error. *Mr. Enoch Totten*, for plaintiff in error.

Oct. 26, 1887. Dismissed with costs for failure to file the transcript of the record during the term to which the writ of error was returnable.

JAMES M. KENNEDY *et al.*, as County Comrs. of Nance County, *v.* BARTLEY LAMB *et al.* [No. 37.] [784]

Appeal from C. Ct. of U. S. for Dist. of Neb.

Messrs. A. J. Poppleton, J. M. Thurston, and *John F. Dillon*, for appellants. No counsel for appellees.

Oct. 26, 1887. Dismissed with costs on motion of appellants.

JAMES R. BISSELL *v.* NATIONAL LAFAYETTE AND BANK OF COMMERCE. [No. 58.] [794]

In error to C. Ct. of U. S. for E. D. of Mo.

Mr. Upton M. Young, for plaintiff in error. *Mr. J. E. McKeighan*, for defendant in error.

June 27, 1887. Dismissed pursuant to the 28th Rule.

UNION PACIFIC R. CO. *v.* C. M. DYCHE. [No. 59.] [792]

In error to Supreme Ct. of Kan.

Mr. John F. Dillon, for plaintiff in error. *Mr. C. M. Dyche*, in *pro. per.*

Nov. 8, 1887. Judgment reversed with costs and cause remanded with instructions to reverse the judgment of the District Court of Riley County, Kansas, as per stipulation, on motion of *Mr. J. M. Wilson*, in behalf of counsel.

[781] HENRY CALLENDER *v.* CLARK E. BATES. [No. 63.]

In error to Supreme Ct. of Dakota.
Messrs. W. K. Mendenhall and *R. J. Wells*, for plaintiff in error.
Nov. 10, 1887. Dismissed with costs because the transcript of record failed to show any service of the citation, but leave granted to the plaintiff in error to move within sixty days from the date of this judgment for the restoration of this cause to the docket.

---

[790] SIMMONS HARDWARE CO. *v.* NATIONAL PUMP CYLINDER CO. [No. 75.]

Appeal from C. Ct. of U. S. for E. D. of Mo.
Mr. Frederic N. Judson, for appellant. *Messrs. H. M. Pollard* and *S. N. Taylor*, for appellee.
Nov. 17, 1887. Dismissed with costs as per stipulation.

---

[783] DAVID R. GOULD *v.* WILLIAM A. SPICER *et al.* [No. 81.]

Appeal from C. Ct. of U. S. for D. of R. I.
Mr. Thomas Wm. Clarke, for appellant. *Mr. Benjamin F. Thurston*, for appellees.
Nov. 29, 1887. Dismissed with costs pursuant to the 10th Rule.

---

[794] WILLIAM B. HENLINE *et al.* *v.* JOEL J. PERRINE. [No. 87.]

Appeal from C. Ct. of U. S. for S. D. of Ill.
Mr. Robert E. Williams, for appellants. *Mr. Mitchell J. Smiley*, for appellee.
Aug. 22, 1887. Dismissed pursuant to the 28th Rule.

---

[783] GRAND RAPIDS & IND. R. R. CO. *v.* OSMUN LILES. [No. 88.]

In error to C. Ct. of U. S. for Dist. of Ind.
Mr. Thomas J. O'Brien, for plaintiff in error. No one opposing.
Dec. 1, 1887. Dismissed with costs by authority of the plaintiff in error.

---

[780] HERMANN R. BALTZER *et al.* v. HENRY LOUIS BISCHOFFSHEIM. [No. 91.]

Appeal from C. Ct. of U. S. for S. D. of N. Y.
Messrs. C. A. Seward and *Charles M. DaCosta*, for appellants. *Mr. Joseph H. Choate*, for appellee.
Oct. 20, 1887. Dismissed as per stipulation.

---

[792] TEXAS & ST. LOUIS R. CO. in MISSOURI and ARKANSAS *v.* CLEVELAND ROLLING MILL CO. [No. 93.]

In error to C. Ct. of U. S. for E. D. of Mo.
Messrs. John P. Ellis and *B. D. Lee*, for plaintiff in error. *Mr. Henry Hitchcock*, for defendant in error.
Dec. 2, 1887. Dismissed with costs pursuant to 10th Rule.

---

[790] JOHN SLINEY *et al.* *v.* UNITED STATES. [No. 101.]

In error to C. Ct. of U. S. for W. D. of Pa.
Mr. John M. Thompson, for plaintiffs in error. *The Attorney-General*, for defendant in error.
Dec. 7, 1887. Dismissed pursuant to the 10th Rule.

L. M. RUMSEY *et al.* *v.* M. M. BUCK. [No. 110.] [795]

Appeal from C. Ct. of U. S. for E. D. of Mo.
Mr. Robert H. Parkinson, for appellants. *Mr. G. M. Stewart*, for appellee.
July 11, 1887. Dismissed pursuant to the 28th Rule.

MEMPHIS & LITTLE ROCK R. R. CO. (as reorganized) *v.* ROBERT K. DOW *et al.*, Trustees, [786]
AND
ROBERT K. DOW *et al.*, Trustees, *v.* MEMPHIS & LITTLE ROCK R. R. CO. (as reorganized). [Nos. 115, 164.]

Appeals from C. Ct. of U. S. for E. D. of Ark.
Messrs. John F. Dillon and *Wager Swayne*, for the Railroad Company. *Mr. U. M. Rose*, for the trustees.
Dec. 15, 1887. Dismissed as per stipulation.

JAMES W. JENKINS *et al.* *v.* ANN ARBOR AGRICULTURAL CO. [No. 123.] [794]

Appeal from C. Ct. of U. S. for E. D. of Mich.
Mr. Charles F. Burton, for appellants. *Messrs. Ephraim Banning* and *Thomas A. Banning*, for appellee.
Aug. 22, 1887. Dismissed pursuant to the 28th Rule.

LINUS M. PRICE *v.* LOUIS H. MEYERS *et al.*, Trustees, *et al.* [No. 124.] [789]

Appeal from Supreme Ct. of Utah.
Messrs. John F. Dillon and *Wager Swayne* for appellant. *Messrs. Lyman K. Bass, C. W. Bennett and Robert Harkness*, for appellees.
Oct. 31, 1887. Dismissed as per stipulation on motion of *Mr. B. H. Bristow*, in behalf of counsel.

MEMPHIS & LITTLE ROCK R. R. CO. (as reorganized) *v.* ROBERT K. DOW *et al.*, Trustees. [No. 125.] [787]

Appeal from C. Ct. of U. S. for E. D. of Ark.
Mr. U. M. Rose, for appellees.
Jan. 9, 1888. Dismissed with costs on motion of *Mr. Wager Swayne*, for appellant.

GUY C. GRAHAM *v.* AARON W. SPENCER. [No. 128.] [783]

In error to C. Ct. of U. S. for Dist. of Mass.
Mr. J. B. Richardson, for plaintiff in error. *Mr. E. R. Hoar*, for defendant in error.
Oct. 11, 1887. Judgment affirmed as per stipulation, on motion of *Mr. J. Hubley Ashton*, in behalf of counsel.

GEORGE AMORY SARGENT *et al.* *v.* MASSACHUSETTS HOSPITAL LIFE INS. CO. *et al.* [No. 131.] [789]

Appeal from C. Ct. of U. S. for Dist. of Mass

Mr. R. M. Morse Jr., for appellants. *Messrs. W. G. Russell* and *Geo. Putnam*, for appellees.
Jan. 11, 1888. Decree affirmed without costs as per stipulation.

---

[782] ORESTES CLEVELAND *et al.* *v.* RHODES LOCKWOOD. [No. 136.]

Appeal from C. Ct. of U. S. for Dist. of N. J.
Mr. J. D. Bedle, for appellants. *Mr. Causten Browne*, for appellee.
Jan. 19, 1888. Dismissed with costs as per stipulation.

---

[785] EDWARD CAMERON KIRK *et al.* *v.* ELKINS MFG. AND GAS CO. [No. 138.]

Appeal from C. Ct. of U. S. for E. D. of Pa.
Mr. Hector T. Fenton, for appellants. *Mr. Jno. G. Johnson*, for appellee.
Jan. 9, 1888. Dismissed with costs on motion of *Mr. William A. McKenney*, in behalf of counsel for appellants.

---

[791] JOSEPH C. SPENCER *et al.* *v.* SAMUEL MCMASTER. [No. 142.]

Appeal from Supreme Ct. of Wyoming.
Messrs. Walter H. Smith and *C. W. Holcombe*, for appellants. No one opposing.
Jan. 23, 1888. Dismissed with costs on motion of *Mr. Walter H. Smith*, of counsel for appellants.
February 13, 1888. Decree of dismissal of January 28, 1888, set aside and case restored to the docket.
Messrs. Walter H. Smith and *C. W. Holcombe*, for appellants. No counsel appearing for appellee.
May 14, 1888. Again dismissed with costs on motion of *Mr. Walter H. Smith*, of counsel for the appellants.

---

[786] MAX MACK *et al.* *v.* OTTO F. SLOTEMAN *et al.* [No. 146.]

In error to C. Ct. of U. S. for E. D. of Wis.
Mr. B. K. Miller, for plaintiffs in error. *Mr. F. W. Cotzhausen*, for defendants in error.
Nov. 15, 1887. Dismissed with costs as per stipulation, on motion of *Mr. Eppa Hunton*, in behalf of counsel.

---

[788] TERAH H. PATTERSON *v.* JOHN GERARDI *et al.* [No. 152.]

In error to C. Ct. of U. S. for E. D. of Mo.
Mr. Wm. H. Bliss, for plaintiff in error. *Mr. Jeff. Chandler*, for defendants in error.
Jan. 31, 1888. Dismissed with costs pursuant to the 10th Rule.

---

[789] THOMAS C. POWER *et al.* *v.* ISAAC G. BAKER *et al.*, Owners of the Steamer "COLONEL MCLEOD," AND ISAAC G. BAKER *et al.*, Owners of the Steamer "COLONEL MCLEOD" *v.* THOMAS C. POWER *et al.* [Nos. 157, 307.]

Appeals from the C. Ct. of U. S. for Dist. of Minn.
Messrs. Edward G. Rogers, C. D. O'Brien and *W. H. Bliss*, for Thomas C. Power *et al.* *Messrs. J. H. Davidson* and *H. L. Williams*, for Isaac G. Baker *et al.* etc.
Feb. 2, 1888. Decree affirmed from the bench, the appellants to pay the costs of their respective appeals in this court. Cost of printing testimony improperly embodied in the transcript of the record, and clerk's fees for supervising the same, to be paid by the appellants in No. 157.

GLACIER MOUNTAIN SILVER MIN. CO. *v.* J. FRANK WILLIS *et al.* [No. 166.] [471]

In error to C. Ct. of U. S. for Dist. of Colorado.
Messrs. Walter H. Smith and *E. C. Ford*, for plaintiff in error. *Mr. George Norris*, for defendants in error.
Feb. 6, 1888. Dismissed for the want of jurisdiction. Motion to reinstate, *Feb. 13, 1888.*
The said Glacier Mountain Silver Mining Company, plaintiff in error, now comes and moves the court to set aside its order made on the 6th of February, 1888, dismissing said cause for want of jurisdiction, and for leave to show that the property in controversy in said cause did at the commencement of said suit and now does exceed $5,000 in value, and therefore that this court has jurisdiction of this cause.

WALTER H. SMITH,
Attorney for plaintiff in error.

[475]

DISTRICT OF COLUMBIA,
County of Washington, } ss:

I, Oscar H. Curtis, being first duly sworn, say that I reside at Oxford, Chenango County, New York; that I am well acquainted with the Silver Gate Tunnel claim, situate at the base of the Glacier Mountain, in Snake River mining district, in Summit County, Colorado, being the same premises and property that is now in controversy in the case now pending in the Supreme Court of the United States, wherein the Glacier Mountain Silver Mining Company is plaintiff in error and J. Frank Willis *et al.* are defendants in error, being No. 166 of the October Term, 1887. I at one time was the owner of said property. I purchased it at sheriff's sale and paid therefor over twelve thousand dollars. I know that more than twenty thousand dollars has already been expended in developing said property, and I have no hesitation in saying that the value of said premises and property on the first day of July, 1883, and at all times since that date, exceeded the sum of five thousand dollars.

OSCAR H. CURTIS.

Subscribed and sworn to before me this 7th day of February, 1888.

[SEAL.] JAMES D. MAHER,
Notary Public.

[Endorsed:] Supreme Court U. S. 1887, October Term. No. 166. The Glacier Mountain Silver Mining Company, pl'ff in error, *vs.* J. Frank Willis *et al.* Motion to set aside judgment of dismissal of Feb. 6, 1888, and affidavit of Oscar H. Curtis as to value of property in dispute.

[Stamped:] Office Supreme Court U. S. Filed Feb. 7, 1888. James H. McKenney, clerk.

Mr. Chief Justice **Waite:**
The further consideration of this motion is postponed until March 19, and the plaintiff in error is directed to cause notice of this order and of the motion with a copy of all affidavits

filed or to be filed in support thereof, to be served upon the defendants in error on or before the second day of March.

April 2, 1888. Order of dismissal set aside and case restored to the docket in the position it occupied before it was dismissed.

(See opinion in this case by *Mr. Justice* Lamar May 14, 1888, *ante* 173.)

---

[794] C. IRVING LEWIS *et al. v.* GEORGE W. IMBODEN, Admr., Etc. [No. 177.]

Appeal from D. C. of U. S. for Dist. of West Va.

Mr. S. A. Miller, for appellants. *Mr. W. Mollohan*, for appellee.

June 20, 1887. Dismissed pursuant to the 28th Rule.

---

[794] JAMES L. PLIMPTON *v.* SAMUEL WINSLOW. [No. 183.]

Appeal from C. Ct. of U. S. for Dist. of Mass.

Mr. Thomas Wm. Clarke, for appellant. *Mr. John L. S. Roberts*, for appellee.

June 30, 1887. Dismissed pursuant to the 28th Rule.

---

[788] WILLIAM D. PARK *v.* UNITED STATES. [No. 184.]

In error to the C. Ct. of U. S. for Dist. of Mass.

Mr. A. B. Wentworth, for plaintiff in error. *The Attorney-General*, for defendant in error.

Feb. 13, 1888. Dismissed on motion of *Mr. A. B. Wentworth*, of counsel for the plaintiff in error.

---

[792] SAMUEL H. WALKER *et al. v.* ROBERT G. DUN *et al.* [No 188. See No. 65.]

Appeal from C. Ct. of U. S. for Dist. of Md.

Messrs. John Lathrop and *Sebastian Brown*, for appellants. *Messrs. John H. Thomas, R. H. Smith* and *W. W. MacFarland*, for appellees.

Nov. 10, 1887. Dismissed with costs so far as it relates to the following named appellants, viz.: H. Crawford Black, John Sheridan and John Wilson, Jr., trading as Black, Sheridan & Wilson; M. J. Blake, Edward H. Lee, Melvin C. Gould, John W. Crowell, Thomas Martin, John Hurley, Nicholas Sandberg and Charles Welin, on motion of *Mr. Sebastian Brown*, for appellants.

---

[791] FREDERICK STITZEL *et al. v.* JOHN M. ATHERTON *et al.* [No. 196.]

Appeal from C. Ct. of U. S. for Dist. of Ky.

Mr. James A. Beattie, for appellants. *Messrs. John Mason Brown, Alexander Pope Humphrey* and *George M. Davie*, for appellees.

Dec. 12, 1887. Dismissed with costs as per stipulation, on motion of *Mr. B. F. Buckner*, in behalf of counsel.

---

[792] UNITED STATES *v.* CLINTON G. COLGATE. [No. 198.]

Appeal from C. Ct. of U. S. for S. D. of N. Y.

The Attorney-General, for appellant. No. counsel appearing for appellee.

April 2, 1888. Dismissed on motion of *Mr. Solicitor-General Jenks* for appellant.

W. C. KAIN *v.* MARY NELSON *et al.* [No. 211.] [784]

In error to C. Ct. of U. S. for E. D. of Tenn.

Messrs. Enoch Totten and *A. H. Pettibone*, for plaintiff in error. *Mr. W. M. Baxter*, for defendants in error.

April 6, 1888. Dismissed with costs pursuant to the 10th Rule.

JOHN S. PERRY *et al.*, Trustees, Etc., *v.* EQUITABLE CO-OPERATIVE FOUNDRY CO. *et al.* [No. 220.] [788]

Appeal from C. Ct. of U. S. for N. D. of N. Y.

Mr. Samuel A. Duncan, for appellants. *Mr. Theodore Bacon*, for appellees.

April 12, 1888. Dismissed with costs pursuant to the 10th Rule.

GEORGE C. RICHARDSON *et al. v.* CHARLES B. DAY *et al.* [No. 226.] [789]

Appeal from C. Ct. of U. S. for N. D. of Ill.

Messrs. J. M. Flower and *D. K. Tenney*, for appellants. *Mr. S. D. Puterbaugh*, for appellees.

May 14, 1888. Decree affirmed with costs by a divided court.

ANDERSON TWINE CO *v.* JOSEPH C. TOD. [No. 227.] [779]

In error to C. Ct. of U. S. for N. D. of Ohio.

Mr. John O. Lee, Aaron Blackford and *James A. Bope*, for plaintiff in error. *Mr. Jacob F. Burket*, for defendant in error.

April 13, 1888. Dismissed with costs as per stipulation.

JOSIAH W. and PETER LYNCH *v.* R. SNOWDEN ANDREWS. [No. 231.] [786]

In error to Supreme Ct. of Appeals of West Va.

Mr. N. Goff, Jr., for plaintiffs in error. *Messrs. Caleb Boggess* and *Charles Marshall*, for defendant in error.

April 18, 1888. Dismissed with costs pursuant to the 10th Rule.

BELL TELEPHONE CO. of MO. *v.* STATE of MISSOURI *ex rel.* BALTIMORE AND OHIO TELEGRAPH CO. [No. 232.] [780]

In error to C. Ct. of U. S. for E. D. of Mo.

Messrs. Henry Hitchcock and *G. A. Finkelnburg*, for plaintiff in error. No counsel appearing for defendant in error.

April 18, 1888. Dismissed with costs on the authority of the plaintiff in error.

EDWIN A. KENNEY *et al. v.* RICHARD A. EDDY *et al.* [No. 236.] [784]

In error to Supreme Ct. of Montana.

Messrs. John C. Robinson and *M. F. Morris*, for plaintiffs in error. No counsel appearing for defendants in error.

April 18, 1888. Dismissed with costs pursuant to the 10th Rule.

[785] FREDERICK LOEBER v. CHARLES D. WYKOFF. [No. 241.]

In error to Supreme Ct. of Montana.

Mr. Thomas L. Napton, for plaintiff in error. *Messrs. Walter H. Smith, E. C. Ford* and *M. F. Morris*, for defendant in error.

April 19, 1888. Dismissed with costs pursuant to the 10th Rule.

[782] ROBERT P. DUFF *et al.* v. ST. LOUIS WOODEN WARE WORKS *et al.* [No. 245.]

Appeal from C. Ct. of U. S. for E. D. of Mo.

Mr. George H. Christy, for appellants. No counsel appearing for appellees.

April 20, 1888. Dismissed with costs pursuant to the 10th Rule.

[786] PETER H. MELLON v. SMITH DAVIS MFG. CO. *et al.* [No. 247.]

Appeal from C. Ct. of U. S. for E. D. of Mo.

Mr. Clinton Rowell, for appellants. No counsel appearing for appellee.

April 24, 1888. Dismissed with costs pursuant to the 10th Rule.

[790] SOUTHERN PACIFIC R. R. CO. v. SANTA CLARA COUNTY. [No. 259.]

In error to Supreme Ct. of Cal.

Mr. Henry Beard, for plaintiff in error. *Mr. Barclay Henley*, for defendant in error.

March 20, 1888. Dismissed with costs on motion of *Mr. Creed Haymond*, of counsel for the plaintiff in error.

[781] CENTRAL PACIFIC R. R. CO. v. SANTA CLARA COUNTY. [No. 260.]

In error to Supreme Ct. of Cal.

Mr. Henry Beard, for plaintiff in error. *Mr. Barclay Henley*, for defendant in error.

March 20, 1888. Dismissed with costs on motion of *Mr. Creed Haymond*, of counsel for the plaintiff in error.

[790] SOUTHERN PACIFIC R. R. CO. v. DANIEL MCCUSKER *et al.* [No. 261.]

In error to Supreme Ct. of Cal.

Mr. Henry Beard, for plaintiff in error. *Mr. J. W. Cooksey*, for defendants in error.

March 20, 1888. Dismissed with costs on motion of *Mr. Creed Haymond*, of counsel for the plaintiff in error.

[790] SOUTHERN PACIFIC R. R. CO. v. DANIEL MCCUSKER *et al.* [No. 262.]

In error to Supreme Ct. of Cal.

Mr. Henry Beard, for plaintiff in error. *Mr. J. W. Cooksey*, for defendants in error.

March 20, 1888. Dismissed with costs on motion of *Mr. Creed Haymond*, of counsel for the plaintiff in error.

[783] JOHN F HARTRANFT, Collector of Customs, v. J. ERNEST F. ZEH *et al.* [No. 270.]

In error to C. Ct. of U. S. for E. D. of Pa.

The Attorney-General, for plaintiff in error. *Mr. F. P. Prichard*, for defendants in error.

May 2, 1888. Dismissed with costs on motion of *Mr. Solicitor-General Jenks*, for the plaintiff in error.

LOUIS A. LE CLAIRE, EXR. ETC. v. JAMES MAY. [No. 276.] [785]

Appeal from C. Ct. of U. S. for S. D. of Ill.

Mr. J. N. Rogers, for appellant. No counsel appearing for appellee.

May 3, 1888. Dismissed with costs pursuant to the 10th Rule.

JOSEPH J. DALE *et al.* v. A. MARMELSTEIN. [No. 280.] [782]

In error to the Supreme Ct. of Georgia.

Mr. George A. Mercer, for the plaintiffs in error. No one opposing.

Nov. 29, 1887. Dismissed with costs on motion of *Mr. George A. Mercer*, for plaintiffs in error.

JOSEPH J. DALE *et al.* v. W. T. WELLS. [No. 281.] [782]

In error to Supreme Ct. of Georgia.

Mr. George A. Mercer, for plaintiffs in error. No one opposing.

Nov. 29, 1887. Dismissed with costs on motion of *Mr. George A. Mercer*, for the plaintiffs in error.

EDWARD P. WOODS *et al.* v. EDWARD S. ROSENBAUM, *et al.* [No. 282.] [793]

Appeal from C. Ct. of U. S. for E. D. of Pa.

Messrs. David Hall Rice and *Leonard Myers*, for appellants. *Mr. W. J. Budd*, for appellees.

May 3, 1888. Dismissed with costs pursuant to the 10th Rule.

CHARLES P. CROSBY v. WILLIAM A. HARDING, Assignee, etc. [No. 287.] [782]

Appeal from C. Ct. of U. S. for S. D. of N. Y.

Mr. Charles P. Crosby, for appellant. *Messrs. W. S. Carter* and *W. B. Hornblower*, for appellee.

May 4, 1888. Dismissed with costs pursuant to the 10th Rule.

JOHN BRANSCOM and MARTHA BRANSCOM v. JOHN W. WOOD. [No. 292.] [781]

Appeal from C. Ct. of U. S. for Dist. of Kan.

Messrs. Simon Wolf and *Wm. F. Mattingly*, for appellants. *Mr. A. Bergen*, for appellee.

May 4, 1888. Dismissed with costs pursuant to the 10th Rule.

MEXICAN NATIONAL CONSTRUCTION CO. v. GUILLAUME REUSENS. [No. 312.] [787]

In error to C. Ct. of U. S. for S. D. of N. Y.

Mr. Theodore F. H. Meyer, for plaintiff in error. *Mr. Michael H. Cardozo*, for defendant in error.

Feb. 13, 1888. Dismissed as per stipulation on motion of *Mr. Samuel Shellabarger*, in behalf of counsel for the plaintiff in error.

EDWARD C. MARSHALL *et al.*, Admrs. Etc. v. UNITED STATES. [No. 318.] [786]

Appeal from Court of Claims.

April 30, 1888. Mr. Justice **Miller:**
The petition for rehearing in this case is granted, and the argument will be heard at the time of the regular call of the case on the docket at the next term.

[787] MEXICAN NATIONAL CONSTRUCTION CO. *v.* GEORGE FRY. [No. 324.]

In error to C. Ct. of U. S. for E. D. of Tex.
Mr. Theodore F. H. Meyer, for plaintiff in error. *Messrs. Wm. W. Boyce* and *Wm. E. Earle*, for defendant in error.
Feb. 13, 1888. Dismissed as per stipulation on motion of *Mr. Samuel Shellabarger*, in behalf of counsel for the plaintiff in error.

[784] HIRAM HOLT *v.* JOHN W. KENDALL *et al.* [No. 325.]

Appeal from C. Ct. of U. S. for N. D. of Ill.
Messrs. Benjamin F. Thurston and *John W. Merriam*, for appellant. No counsel appearing for appellees.
May 4, 1888. Dismissed with costs on motion of *Mr. J. M. Wilson*, in behalf of counsel for the appellant.

[795] FLAVIUS J. UNDERWOOD *v.* ANDREW WARREN *et al.* [No. 332.]

Appeal from C. Ct. of U. S. for E. D. of Mo.
Mr. G. M. Stewart, for appellant. *Mr. Robt. H. Parkinson*, for appellees.
July 11, 1887. Dismissed pursuant to the 28th Rule.

[793] WEIR PLOW CO. *v.* JOHN M. TURNBULL *et al.* [No. 335.]

Appeal from C. Ct. of U. S. for N. D. of Ill.
Messrs. E. A. West and *L. L. Bond*, for appellant. *Mr. J. L. High*, for appellees.
May 4, 1888. Dismissed as per stipulation on motion of *Mr. J. M. Wilson*, in behalf of counsel.

[794] CYRUS WOODMAN *et al.* *v.* MISSIONARY SOCIETY OF M. E. CHURCH. [No. 367.]

In error to Supreme Ct. of Mich.
Messrs. Frank T. Lodge and *DeForest Paine*, for plaintiffs in error. *Mr. E. L. Fancher*, for defendant in error.
June 8, 1887. Dismissed pursuant to the 28th Rule.
Jan. 9, 1888. Ordered by the court that the above order be amended by adding thereto the words "without prejudice to the right of Albert M. Henry to proceed as he may be advised, in the court below, for the protection of his interest."

[779] EDWARD P. ALLIS *v.* ALFRED A. FREEMAN *et al.* [No. 374.]

Appeal from C. Ct. of U. S. for W. D. of Wis.
Messrs. F. W. Cotzhausen and *R. Mason*, for appellant. No counsel appearing for appellees.
April 2, 1888. Dismissed with costs on the authority of the appellant and on motion of *Mr. R. D. Mussey*, in behalf of counsel.

[781] ISAAC W. BIRDSEYE *et al.* *v.* SOLOMON HEILNER *et al.* [No. 393.]

Appeal from C. Ct. of U. S. for S. D. of N. Y.
Mr. G. M. Plympton, for appellants. *Mr. Livingston Gifford*, for appellees.
May 4, 1888. Dismissed as per stipulation on motion of *Mr. J. M. Wilson*, in behalf of counsel.

[786] MEMPHIS & LITTLE ROCK R. R. CO. (as reorganized) *v.* ROBERT K. DOW *et al.*, Trustees. [No. 452.]

Appeal from C. Ct. of U. S. for S. D. of N. Y.
Messrs. John F. Dillon and *Wager Swayne*, for appellant. *Mr. John M. Bowers*, for appellees.
May 3, 1888. Dismissed as per stipulation on motion of *Mr. Stephen G. Clarke*, in behalf of counsel.

[785] ANDRE N. DE LA MOTHE *v.* WILLIAM ANGUS. [No. 467.]

Appeal from C. Ct. of U. S. for S. D. of Ill.
Messrs. A. L. Merriman and *James H. Graham*, for appellant. *Messrs. David Fales* and *Frank W. Hackett*, for appellee.
March 20, 1888. Dismissed with costs on motion of *Mr. James H. Graham*, of counsel for the appellant.

[791] TEXAS & PACIFIC R. CO. *v.* CLEORA E. TOOTHMAN *et al.* [No. 487.]

In error to C. Ct. of U. S. for E. D. of Tex.
Messrs. John C. Brown, A. T. Britton, A. B. Browne and *John F. Dillon*, for plaintiff in error. *Messrs. C. C. Cole* and *W. L. Cole*, for defendants in error.
May 14, 1888. Judgment reversed with costs as per stipulation.

[790] SOUTHERN PACIFIC R. R. CO. *v.* CITY OF LOS ANGELES. [No. 489.]

In error to Supreme Ct. of Cal.
Mr. George H. Smith, for plaintiff in error. No counsel for defendant in error.
March 20, 1888. Dismissed with costs on motion of *Mr. Creed Haymond*, of counsel for the plaintiff in error.

[795] WILLIAM R. SILL, Assignee, Etc., *v.* CHARLES B. SOLBERG. [No. 535.]

Appeal from C. Ct. of U. S. for W. D. of Wis.
Mr. Angus Cameron, for appellant. *Mr. S. U. Pinney*, for appellee.
Aug. 1, 1887. Dismissed pursuant to the 28th Rule.

[788] PEOPLES BANK OF CITY OF NEW YORK *v.* MECHANICS NAT. BANK OF NEWARK, N. J. and FREDERICK FRELINGHUYSEN, Receiver. [No. 587.]

Appeal from C. Ct. of U. S. for Dist. of N. J.
Messrs. Cortlandt Parker & R. Wayne Parker, for appellant. *Mr. A. Q. Keasbey*, for appellees.
Feb. 7, 1888. Dismissed as per stipulation on motion of *Mr. Thomas N. McCarter*, in behalf of counsel.

[795] NEW MEXICO & ARIZONA R. R. CO. *v.* JAMES HOBSON. [No. 712.]

In error to Supreme Ct. of Arizona.

Messrs. A. T. Britton and *A. B. Browne*, for plaintiff in error. *Mr. Barclay Henley*, for defendant in error.

Aug. 23, 1887. Dismissed pursuant to the 28th Rule.

---

[788] PEOPLE'S BANK OF CITY OF NEW YORK *v.* MECHANICS NAT. BANK OF NEWARK, N. J. and FREDERICK FRELINGHUYSEN, Receiver. [No. 716.]

Appeal from C. Ct. of U. S. for Dist. of N. J.

Messrs. Cortlandt Parker and *R. Wayne Parker*, for appellant. No counsel for appellees.

Feb. 7, 1888. Dismissed on authority of counsel for appellant, on motion of *Mr. Thomas N. McCarter*, in behalf of counsel.

---

[791] J. VOLNEY SWETTING *et al.* *v.* AMERICAN EMIGRANT CO. [No. 736.]

Appeal from C. Ct. of U. S. for S. D. of Iowa.

Mr. J. H. Call, for appellants. No counsel appearing for the appellee.

May 14, 1888. Dismissed with costs on motion of *Mr. W. Hallett Phillips*, in behalf of counsel for the appellants.

---

[789] BUSHROD ROBINSON *et al* *v.* WILLIAM WALL. [No. 785.]

Appeal from the Supreme Ct. of Dist. of Columbia.

Mr. J. J. Johnson, for appellants. *Mr. Randall Hagner*, for appellee.

Jan. 9, 1888. Dismissed with costs as per stipulation.

---

[785] PETER LORILLARD *et al.* *v.* JOSEPH F. PRIDE. [No. 806.]

Appeal from C. Ct. of U. S. for N. D. of Ill.

Mr. Rowland Cox, for appellants. *Messrs. Samuel A. Duncan* and *Benjamin F. Thurston*, for appellee.

May 4, 1888. Dismissed as per stipulation, on motion of *Mr. J. M. Wilson*, in behalf of counsel.

---

[780] R. H. BARKER *et al.* *v.* KANSAS & GULF SHORT LINE R. R. CO. *et al.* [No. 852.]

Appeal from C. Ct. of U. S. for E. D. of Tex.

Mr. E. Ellery Anderson, for appellants. *Mr. H. Chilton*, for appellees.

May 3, 1888. Dismissed with costs as per stipulation, on motion of *Mr. Stephen G. Clarke*, in behalf of counsel.

---

[782] COPPER QUEEN MIN. CO. *v.* ARIZONA PRINCE COPPER CO. [No. 858.]

In error to Supreme Ct. of Arizona.

Mr. Thomas Mitchell, for plaintiff in error. No one opposing.

Feb. 2, 1888. Dismissed with costs on motion of *Mr. J. K. McCammon*, in behalf of counsel for the plaintiff in error.

ALLISON NAILOR, JR., *et al.* *v.* WASHINGTON T. NAILOR *et al.* [No. 862.] [787]

Appeal from Supreme Ct. of Dist. of Columbia.

Messrs. Henry Wise Garnett and *Walter D. Davidge*, for appellants. *Messrs. C. C. Cole* and *William A. Cook*, for appellees.

May 14, 1888. Dismissed for the want of jurisdiction.

PENNSYLVANIA R. R. CO. *v.* HENRY L. JANEWAY *et al.* [No. 882.] [788]

In error to C. Ct. of U. S. for Dist. of N. J.

Mr. Edward T. Green, for plaintiff in error. *Mr. John R. Emery*, for defendants in error.

Oct. 26, 1887. Dismissed as per stipulation, on motion of *Mr. Enoch Totten*, in behalf of counsel.

BAXTER MOUNTAIN GOLD MIN. CO. *v.* HENRY J. PATTERSON *et al.* [No. 939.] [780]

In error to Supreme Ct. of New Mexico.

Mr. J. H. Hoffecker, Jr., for plaintiff in error. No counsel appearing for defendants in error.

May 3, 1888. Dismissed with costs on motion of *Mr. J. H. Hoffecker, Jr.*, for plaintiff in error.

CENTRAL PACIFIC R. R. CO. *v.* UNITED NICKEL CO. [No. 951.] [781]

In error to C. Ct. of U. S. for N. D. of Cal.

Mr. M. A. Wheaton, for plaintiff in error. No counsel for defendant in error.

March 20, 1888. Dismissed with costs on motion of *Mr. Creed Haymond*, of counsel for the plaintiff in error.

BRITISH STEAMSHIP "SUFFOLK," J. P. HOOPER *et al.* Claimants, *et al.* *v.* MAYER GOLDSMITH. [No. 1051.] [791]

Appeal from C. Ct. of U. S. for Dist. of Md.

Mr. John H. Thomas, for appellants. *Mr. Sebastian Brown*, for appellee.

Jan. 18, 1888. Dismissed with costs as per stipulation, on motion of *Mr. M. F. Morris*, in behalf of counsel.

SILAS C. BAINS *et al.* *v.* MELISSA P. DODGE *et al.* [No. 1152.] [779]

In error to C. Ct. of U. S. for N. D. of Tex.

Mr. Roger Q. Mills, for plaintiffs in error. No counsel for defendants in error.

Feb. 13, 1888. Dismissed with costs on motion of *Mr. A. H. Garland*, in behalf of counsel for the plaintiffs in error.

CHARLES H. LEONARD *v.* LOUIS S. LOVELL. [No. 1292.] [785]

Appeal from C. Ct. of U. S. for W. D. of Mich.

Oct. 31, 1887. Docketed and dismissed with costs on motion of *Mr. E. M. Marble*, for appellee.

No one opposing.

[779] FREDERICK B. BAIRD *et al.* *v.* FRANK H. BALDWIN *et al.* [No 1300.]

Appeal from C. Ct. of U. S. for N. D. of Ill.

Nov. 15, 1887. Docketed and dismissed with costs on motion of *Mr. Eppa Hunton*, for appellees.

No one opposing.

---

[791] COUNT J. TELFNER *v.* GEORGE W. RUSS. [No. 1327.]

In error to C. Ct. of U. S. for W. D. of Tex.

Dec. 19, 1887. Docketed and dismissed with costs on motion of *Mr. Jno. J. Weed*, for the defendant in error.

No one opposing.

---

[784] LOUIS HELBING *v.* PEOPLE OF THE STATE OF CALIFORNIA. [No. 1333.]

In error to Supreme Ct. of Cal.

Jan. 13, 1888. Docketed and dismissed with costs on motion of *Mr. E. B. Stonehill*, for defendants in error.

No one opposing.

---

[789] JOHN S. QUARLES *et al.* *v.* W. H. SIMRALL *et al.* [No. 1335.]

Appeal from C. Ct. of U. S. for M. D. of Tenn.

Jan. 19, 1888. Docketed and dismissed with costs on motion of *Mr. William A. McKenney*, for appellees.

No one opposing.

---

[781] CHICAGO, BURLINGTON & KANSAS CITY R. CO. *v.* SAMUEL C. HUTCHINSON, Treas. and *ex officio* Collector of SULLIVAN COUNTY, MO. [No. 1362.]

Appeal from C. Ct. of U. S. for W. D. of Mo.

Feb. 20, 1888. Docketed and dismissed with costs on motion of *Mr. John P. Butler*, for appellee.

No one opposing.

---

[793] HAMILTON WILSON *v.* ALLEN C. MCARTHUR *et al.* [No. 1363.]

Appeal from C. Ct. of U. S. for S. D. of Ohio.

Feb. 20, 1888. Docketed and dismissed with costs on motion of *Mr. Lawrence Maxwell, Jr.*, for appellees.

No one opposing.

C. D. GREENE *et al.* *v.* ALLEN C. MCARTHUR *et al.* [No. 1364.] [783]

Appeal from C. Ct. of U. S. for S. D. of Ohio.

Feb. 20, 1888. Docketed and dismissed with costs on motion of *Mr. Lawrence Maxwell, Jr.*, for appellees.

No one opposing.

JAMES M. GLENN, Trustee, *v.* ALLEN C. MCARTHUR *et al.* [No. 1365.] [783]

Appeal from C. Ct. of U. S. for S. D. of Ohio.

Feb. 20, 1888. Docketed and dismissed with costs on motion of *Mr. Lawrence Maxwell, Jr.*, for appellees.

No one opposing.

DISTRICT OF COLUMBIA *v.* WILLIAM C. MURDOCK AND WILLIAM C. MURDOCK *v.* DISTRICT OF COLUMBIA. [Nos. 1378, 1379.] [782]

Appeals from the Court of Claims.

The Attorney-General and *Mr. Assistant Attorney-General Howard*, for the District of Columbia. *Messrs. C. C. Cole* and *John C. Fay*, for Murdock.

April 23, 1888. Judgment affirmed by a divided court.

UNITED STATES *v.* WILLIAM L. BAILEY, Admr. Etc. [No. 1386.] [792]

Appeal from the Court of Claims.

The Attorney-General, *Mr. Assistant Attorney-General Howard* and *Mr. F. P. De Wees*, for appellant. *Messrs. George A. King* and *I. G. Kimball*, for appellee.

April 23, 1888. Judgment affirmed by a divided court.

JOSEPH A. JONES *et al.* *v.* EDWARD NICHOLS. [No. 1391.] [784]

Appeal from C. Ct. of U. S. for N. D. of Ala.

March 20, 1888. Docketed and dismissed with costs on motion of *Mr. James L. Pugh, Jr.*, for appellee.

No one opposing.

EDWARD BATCHELOR *v.* SAMUEL W. KIRKBRIDE. [No. 1405.] [780]

In error to C. Ct. of U. S. for Dist. of N. J.

April 2, 1888. Docketed and dismissed with costs on motion of *Mr. J. Hubley Ashton*, for the defendant in error.

No one opposing.

CASES

ARGUED AND DECIDED

IN THE

SUPREME COURT

OF THE

UNITED STATES

IN

OCTOBER TERM, 1888.

Vol. 128.

REFERENCE TABLE

OF SUCH CASES

DECIDED IN U. S. SUPREME COURT,

OCTOBER TERM, 1888,

AND REPORTED HEREIN,

VOL. 128,

AS ALSO APPEAR IN

OFFICIAL REPORTER'S EDITION.

Off. Rep. 128 U. S.	Title.	Here in.
1	Kidd v. Pearson	346
15–16	" "	348
16–19	" "	349
19–22	" "	350
22–25	" "	351
25–26	" "	352
26	Leather Manufacturers' Bank, v. Merchants' Bank	342
33–36	" " "	344
36–39	" " "	345
39	Western Union Tel. Co. v. Pennsylvania	345
39–40	" " " "	346
40	United States, *ex rel.* Dunlap, v. Black	
	United States, *ex rel.* Rose, v. Black	
	United States, *ex rel.* Miller, v. Black.	354
41–43	" " " "	355
43–46	" " " "	356
46–49	" " " "	357
49–52	" " " "	358
52	" " " "	359
53	Robinson v. Fair	415
54–55	" "	418
76–77	" "	418
77–78	" "	419
78–79	" "	420
79–82	" "	421
82–85	" "	422
85–88	" "	423
88–91	" "	424
91	Kane v. Northern Cent. R. Co.	339
92	" " " "	340
92–96	" " " "	341
96	" " " "	342
96	Nashville, C. & St. L. R. Co. v. Alabama	352
96–99	" " "	353
99–102	" " "	354
102–104	Livingston County v. First Nat. Bank of Portsmouth	359
104–107	" " "	360
107–110	Livingston County v. First Nat. Bank of Portsmouth	361
110–113	" " "	362
113–116	" " "	363
116–119	" " "	364
119–122	" " "	365
122–125	" " "	366
125–128	" " "	367
128	" " "	368
129	Asher v. Texas	368
129–132	" "	369
132	Chappell v. Bradshaw	369
133–134	" "	370
135	Culliford v. Gomila	381
135–138	" "	383
138–141	" "	384
141–144	" "	385
144–151	" "	386
151–154	" "	387
154–157	" "	388
157–158	" "	389
158	Crescent Brewing Co. v. Gottfried	390
159–160	" " " "	391
160–162	" " " "	392
162–167	" " " "	393
167–170	" " " "	394
170	" " " "	395
170	Gaff v. Gottfried Hack v. Gottfried	395
171	Lovejoy v. United States	389
172–173	" " "	390
174	Georgia Railroad and Banking Co. v. Smith	377
177–178	" " "	379
178–181	" " "	380
181–182	" " "	381
182	Liggett & Myers Tobacco Co. v. Finzer	395
183–184	" " " "	396
185–186	Bundy v. Cocke	397
186–189	" "	398
189	Jaehne v. New York	398
190–191	" "	399

Off. Rep. 128 U. S.	Title.	Here in.
191–194	Jaehne v. New York	400
195	Central Bank of Washington v. Hume Hume v. Central Bank of Washington	370
203	" " " "	374
203–206	" " " "	375
206–209	" " " "	376
209–212	" " " "	377
212–214	Ridings v. Johnson	401
214–217	" "	402
217–220	" "	403
220–223	" "	404
223–225	" "	405
225–227	Estis v. Trabue	437
227–230	" "	438
230	" "	439
230	United States v. Knox	465
231–232	" "	466
232–235	" "	467
235	" "	468
236	Brodnax v. Ætna Insurance Co.	445
240–242	" " " "	447
242–244	" " " "	448
244	Banks v. Manchester	425
245–247	" "	426
247–249	" "	427
250–252	" "	428
252–254	" "	429
254–256	United States v. Cook	464
256–257	" "	465
258	Credit Company v. Arkansas Cent. R. Co.	448
258–261	" " " "	449
261	" " " "	450
262	United States v. Palmer	442
262–268	" " "	443
268–270	" " "	444
270–272	" " "	445
273	Means v. Dowd	429
273–274	" "	432
274–277	" "	433
277–281	" "	434
281–285	" "	435
285–288	" "	436
288–289	" "	437
289	*Ex parte* Terry	405
297–298	" "	406
298–301	" "	407
301–304	" "	408
304–307	" "	409
307–310	" "	410
310–313	" "	411
313–314	" "	412
315	United States v. American Bell Telephone Co.	450
349	" " " "	455
349–352	" " " "	456
352–355	" " " "	457
355–358	" " " "	458
358–361	" " " "	459
361–364	" " " "	460
364–367	" " " "	461
367–370	" " " "	462
370–373	" " " "	463
373	" " " "	464
374	Johnson v. Christian	412
374–379	" "	413
379–382	" "	414
382	" "	415

Off. Rep. 128 U. S.	Title.	
383	Stewart v. Wyoming Cattle Ranche Co.	439
383–386	" " " "	440
386–389	" " " "	441
389–390	" " " "	442
391	Cogswell v. Fordyce	484
392	" "	485
393	United States v. DeWalt	485
393–394	" " "	486
394–395	Pacific Postal Telegraph Cable Co. v. O'Connor	483
395–397	Clark v. Commonwealth of Pennsylvania	487
397	" " "	488
398	United States v. Reisinger	480
401–402	" " "	481
402–403	" " "	482
403	Brown v. Guarantee Trust and Safe Deposit Co.	468
410–412	" " "	470
412–415	" " "	471
415–416	" " "	472
416	Wood v. Guarantee Trust and Safe Deposit Co.	472
420–424	" " "	473
424–426	" " "	474
426	Fire Insurance Association v. Wickham	503
426–428	" " "	504
428–431	" " "	505
431–435	" " "	506
435–437	United States v. Foster	486
437	" " "	487
438	Hennessey v. Woolworth	500
441–442	" "	501
442–443	" " "	502
443	Jones v. East Tenn., Va. & Ga. R. R. Co.	478
444–445	" " " "	479
445–446	" " " "	480
446	Pollak v. Brush Electric Association	474
447–448	" " " "	475
448–451	" " " "	476
451–455	" " " "	477
455–456	" " " "	478
456–458	Cornelius v. Kessel	482
458–461	" "	483
461–463	" "	484
464	Hunt v. Blackburn	488
469	" "	490
469–471	" "	491
471–472	United States v. McDonald	506
472–474	" " "	507
474	The Gazelle and Cargo	496
484–487	" "	499
487	" "	500
488	Quimby v. Boyd	502
488–489	" "	503
489	Denny v. Bennett	491
491–492	" "	492
492–495	" "	493
495–498	" "	494
498–501	" "	495
501–503	" "	496
503	Danville v. Brown	507
504–505	" "	508
506	Farmers Friend Mfg. Co. v. Challenge Corn-Planter Co.	529
506–508	" " " "	530

Off. Rep. 128 U. S.	Title.	Here in.
508–510	Farmers Friend Mfg. Co. v. Challenge Corn-Planter Co.	531
510	Dublin Township v. Milford Savings Inst.	533
513–514	" " " "	534
514	" " " "	535
514	Menendez v. Holt	526
519–520	" "	527
520–523	" "	528
523–525	" "	529
525	Ryder v. Holt	529
526	German Savings Bank v. Franklin County	519
527–528	" " " "	520
528–531	" " " "	521
531–534	" " " "	522
534–537	" " " "	523
537–539	" " " "	524
539–542	" " " "	525
542–544	" " " "	526
544	Chateaugay Ore & Iron Co., Petitioner	508
545	" " "	509
545–548	" " "	510
548–554	" " "	511
554–556	" " "	512
556–557	" " "	513
557	Purdy v. Lansing	531
558	" "	532
558–559	" "	533
560	Glasgow v. Baker	513
560–563	" "	515
563–566	" "	516
566–573	" "	517
573–576	" "	518
576–578	" "	519
578	Walston v. Nevin } Roach v. Nevin }	544
579–580	" "	545
580–583	" "	546
583	Means v. Dowd	578
584	Chappell v. Bradshaw	578
584–585	Hoyt's Admr. v. Hunbury	565
585	" " "	566
586–588	Metcalf v. Watertown	543
588–590	Metcalf v. Watertown	544
590–593	Ware v. Allen	563
593–596	" "	564
596–597	" "	565
598–599	Goodyear's India Rubber Glove Mfg. Co. v. Goodyear Rubber Co.	535
599–602	" " "	536
602–604	" " "	537
605	Marsh v. Nichols, Shepard & Co. } Nichols, Shepard & Co. v. Marsh }	538
605–606	" " " "	539
606–611	" " " "	540
611–614	" " " "	541
614–616	" " " "	542
617	Callaghan v. Myers	547
619–621	" "	550
621–624	" "	551
624–627	" "	552
627–629	" "	553
629–632	" "	554
632–646	" "	555
646–649	" "	556
649–652	" "	557
652–655	" "	558
655–658	" "	559
658–661	" "	560
661–664	" "	561
664–667	" "	562
667	Kennedy v. Hazelton	576
671	" "	577
671–673	" "	578
673	United States v. Iron Silver Mining Co.	571
674–676	" " "	572
676–678	" " "	573
678–681	" " "	574
681–684	" " "	575
684–686	" " "	576
686	Stachelberg v. Ponce	569
690–691	" "	571
691–693	Cragin v. Powell	566
693–696	" "	567
696–699	" "	568
699–700	" "	569

THE DECISIONS

OF THE

Supreme Court of the United States,

AT

OCTOBER TERM, 1888.

[Authenticated copy of opinion record strictly followed, except as to such reference words and figures as are inclosed in brackets.]

[91] EDWARD KANE, *Plff. in Err.*,
v.
NORTHERN CENTRAL R. CO.

(See S. C. Reporter's ed. 91-96.)

Contributory negligence, what is not—when question for jury—obvious dangers—special circumstances—forgetfulness.

In an action for personal injuries to plaintiff, a brakeman on defendant's railway, where he fell from a car and was injured by reason of a step being off from the car, which he had discovered to be missing, and which car the conductor had promised to drop out of the train if it did not contain perishable freight, *held:*

1. The question of contributory negligence should have been submitted to the jury.
2. The plaintiff was not guilty of contributory negligence in staying upon the train in the capacity of a brakeman, after observing that a step was missing from one of the cars over which he might pass while discharging his duties, after the conductor's assurance that the car should be removed from the train when it reached the coal yard, or junction, if upon examining its manifests he found that it did not contain perishable freight.
3. An employé was guilty of contributory negligence where his injuries substantially resulted from dangers so obvious and threatening that a reasonably prudent man, under similar circumstances, would have avoided them.
4. In determining whether an employé has recklessly exposed himself to peril, or failed to exercise the care for his personal safety that might reasonably be expected, regard must always be had to the exigencies of his position and to all the circumstances of the particular occasion.
5. The court erred in not submitting to the jury to determine whether the plaintiff, in forgetting or not recalling at the precise moment the fact that the car from which he attempted to let himself down was the one from which a step was missing, was in the exercise of the degree of care and caution which was incumbent upon a man of ordinary prudence in the same calling and under the circumstances in which he was placed. If he was, then he was not guilty of contributory negligence that would defeat his right of recovery.

[No. 8.]

Submitted Oct. 12, 1888. Decided Oct. 22, 1888.

IN ERROR to the Circuit Court of the United States for the Eastern District of Pennsylvania, to review a judgment in favor of defendant in an action to recover for personal injuries sustained by defendant's negligence. *Reversed.*

The facts are stated in the opinion.

Messrs. **James H. Gable,** *N. Dubois Miller* and *W. F. Bay Stewart,* for plaintiff in error:

Plaintiff took the risk of dangers ordinarily incident to the service only, the obligation of the master being to furnish, provide and maintain sufficient, safe, adequate and suitable machinery and cars for the use of plaintiff; the furnishing and the putting into its train a car the character of which involved peril of life and limb to plaintiff was an act of gross negligence on the part of defendant.

Mullan v. *Phila. etc. Steamship Co.* 78 Pa. 32; *Snow* v. *Housatonic R. Co.* 8 Allen, 446; *Hough* v. *Texas & Pac. R. R. Co.* 100 U. S. 213 (25: 612); *Gilman* v. *Eastern R. Co.* 13 Allen, 440; *Northern Pac. R. Co.* v. *Herbert,* 116 U. S. 642 (29: 755).

The negligence of the car inspectors was the negligence of the defendant.

Northern Pac. R. Co. v. *Herbert, supra; Brann* v. *Chicago, R. I. & P. R. Co.* 53 Iowa, 595.

The corporation is equally chargeable, whether the negligence was in originally failing to provide or afterwards failing to keep its cars in a safe condition and repair.

Ford v. *Fitchburg R. Co.* 110 Mass. 241; Wharton, Neg. § 211.

The conductor is the representative of the master, being clothed with the general authority of the master as to the running of the particular train, and therefore not within the rule relating to the negligence of fellow servants.

Chicago, M. & St. P. R. Co. v. *Ross,* 112 U. S. 377 (28: 787); *Shanny* v. *Androscoggin Mills,* 66 Maine, 420.

Where the servant is induced to continue in the service by promises of superior officers that defective machinery, or, as in this case, defective and dangerous cars, shall be removed, the servant assumes no additional risk, and if injured thereby the master is liable.

Clarke v. *Holmes,* 7 Hurl. & N. 942; *Lansing* v. *N. Y. C. R. Co.* 49 N. Y. 533; *Patterson* v. *Pittsburg & C. R. Co.* 76 Pa. 393; *D. C.* v. *McElligott,* 117 U. S. 621 (29: 946).

It is a question for the jury whether he voluntarily assumes the risk of the service, even when he remains without a promise to repair

or remove defective machinery or incompetent servants.

Cleveland etc. R. Co. v. *Keary*, 8 Ohio St. 201.

Unless negligence was the only possible inference to be drawn from the fact of not remembering, under all the circumstances, that the step was off, then the court could not declare as matter of law that plaintiff was guilty of contributory negligence.

Johnson v. *Bruner*, 61 Pa. 63; *Conn. Mut. L. Ins. Co.* v. *Lathrop*, 111 U. S. 612, 615 (28: 536); *Phœnix Mut. L. Ins. Co.* v. *Doster*, 106 U. S. 30, 32 (27: 66); *Manchester* v. *Ericsson*, 105 U. S. 347, 349-50 (26: 1099, 1100).

Messrs. A. H. Wintersteen and **Wayne Mac Veagh**, for defendant in error:

Where the plaintiff has so far contributed to the injury by his want of ordinary care that but for such want of ordinary care on his part the injury would not have been done, the railway is not liable to him in damages for such injury.

Patterson, Ry. Accident Law, § 45 and cases cited.

Where a servant has equal means of knowing the danger, so that the master and servant stand equal in that respect, and the servant is not specifically commanded as to the time and manner in which the work may be done, but is told to do a particular thing, and has such discretion that he can have some control over the means, time and manner of doing the work, then, unless he does it in a way and with the means which will be the safest, he is guilty of contributory negligence.

English v. *Chicago, M. & St. P. R. Co.* 24 Fed. Rep. 906; *Shanny* v. *Androscoggin Mills*, 66 Maine, 420; *Foy* v. *Buchanan*, 4 N. Y. S. R. 894; *Northern Pac. R. Co.* v. *Herbert*, 116 U. S. 642 (29: 755).

The negligence of the defendant does not relieve the plaintiff of the duty of caring for his own safety.

Chicago etc. R. Co. v. *Houston*, 95 U. S. 697 (24: 542); *Schofield* v. *Chicago, M. & St. P. R. Co.* 114 U. S. 615 (29: 224); *D. C.* v. *McElligott*, 117 U. S. 621 (29: 946); *Tuff* v. *Warman*, 5 C. B. N. S. 573; *Williams* v. *Holland*, 6 Car. & P. 23; *Bunn* v. *Del. L. & W. R. Co.* 6 Hun, 303; *Toomey* v. *Turner*, 24 Hun, 599; *Becht* v. *Corbin*, 92 N. Y. 658; *Dunn* v. *R. R.* 78 Va. 645; *Rudd* v. *Richmond & D. R. Co.* 23 Am. & Eng. R. R. Cas. 253; *Chicago & N. W. R. Co.* v. *Jackson*, 55 Ill. 492.

It may be a question for the jury to say whether an employé, under all the circumstances, is negligent in remaining at his work after discovering its danger and a promise is given him that the danger would be removed.

Hough v. *Texas & Pac. R. Co.* 100 U. S. 224 (25: 617); *D. C.* v. *McElligott*, 117 U. S. 632 (29: 949); *Laning* v. *N. Y. C. R. Co.* 49 N. Y. 521; *Patterson* v. *Pittsburg & C. R. Co.* 76 Pa. 389; *Ford* v. *Fitchburg R. Co.* 110 Mass. 261; *Cunard Steamship Co.* v. *Carey*, 119 U. S. 245 (30: 354); *Chicago & N. R. Co.* v. *McLaughlin*, 119 U. S. 566 (30: 477).

When the evidence, after giving the plaintiff the benefit of every inference that could fairly be drawn from it, is insufficient to authorize a verdict in his favor, so that such a verdict, if returned, must be set aside, a peremptory instruction for the defendant is proper.

Marshall v. *Hubbard*, 117 U. S. 415 (29: 919); *Pleasants* v. *Fant*, 89 U. S. 22 Wall. 116, 143 (22: 780); *Montclair* v. *Dana*, 107 U. S. 162 (27: 436); *Randall* v. *Balt. & O. R. Co.* 109 U. S. 478, 483 (27: 1003, 1005); *Anderson Co.* v. *Beal* and *Baylis* v. *Travelers Ins. Co.* 113 U. S. 227, 241, 316, 320 (28: 966, 971, 989, 990); *Schofield* v. *Chicago, M. & St. P. R. Co.* 114 U. S. 615, 619 (29: 224, 225), and cases there cited; *Hathaway* v. *E. Tenn., V. & G. R. Co.* 29 Fed. Rep. 489; *Goodlett* v. *Louisville & N. R. Co.* 122 U. S. 391, 411 (30: 1230, 1234); *Balt. & P. R. Co.* v. *Jones*, 95 U. S. 439 (24: 506); *Doggett* v. *Ill. Cent. R. Co.* 34 Iowa, 284; *Cunningham* v. *Chicago, M. & St. P. R. Co.* 5 McCrary, 465.

A brakeman is charged with knowledge of the obvious condition of the structures, etc., of the cars with which he is to perform his duties, and he cannot recover for injuries arising from defects of which he had knowledge.

Ferguson v. *Fall Brook Coal Co.* 4 N. Y. S. Rep. 423.

Mr. Justice **Harlan** delivered the opinion of the court: [92]

This is an action to recover damages for personal injuries sustained by the plaintiff while in the discharge of his duties as an employé of the Northern Central Railway Company. It is based upon the alleged negligence of the Company in not providing suitable and safe appliances for the cars on which the plaintiff was assigned for duty. At the conclusion of the evidence introduced in his behalf the court directed a verdict for the Company.

It was in evidence that at midnight, in the month of February, a train of freight cars, belonging to or being operated by the defendant, left Marysville, on its line of road, for the City of Baltimore. The rear car was the caboose; the third car from the caboose was an ordinary "house car;" the fourth one was laden with lumber. The car upon which the plaintiff was required to take position while the train was in motion was about the eighth or tenth one from the caboose. His principal duty was to "brake" the train from that car back to the caboose. When the train, moving southward, was going into York Haven, twenty miles from Marysville, the plaintiff, while passing over it for the purpose of putting down the brakes, discovered that the third car from the caboose had one step off at the end nearest the engine, and immediately called the attention of the conductor to the fact. The conductor promised to drop that car at the coal yard or junction beyond them, in the direction of Baltimore, if upon looking at his manifests he found that it did not contain perishable freight. When the train stopped, about 4 or 5 o'clock in the morning, at Coldfelters, some miles north of the coal yard or junction, the plaintiff went to the caboose to eat his breakfast and warm himself. It was snowing, freezing and sleeting. One of the witnesses testified that "it was a fearful cold night, raining and sleeting; the train was covered with ice and snow; . . . it was most bitter cold; the rain was freezing as it fell; a regular winter's storm." While the plaintiff was in the caboose eating his breakfast the train moved off. He immediately started for his post, leaving behind his coat and gloves. Upon reaching the south end of the

third car from the caboose he attempted to let [93] himself down from it in order to reach the next car ahead of him, which was the lumber car, and pass over the latter to the one on which he usually stood while the train was in motion. At the moment he let himself down from the top of the house car he forgot that one of its steps was missing; and, before realizing the danger of his position, and without being able then to lift himself back to the top of the car, he fell below upon the railroad track and between the wheels of the moving train, causing him to lose both legs. The plaintiff testified that if, at the moment of letting himself down from the top of the car, he had recalled the fact that one of its steps was gone, he might have pulled himself back with his hands, or have "slid down" on the brake rod; for he had before climbed up and down by holding that rod with one hand and putting his foot against it and pulling himself up until he touched the running board. He testified that he could not remember how his mind was occupied at the time; "only going to my post, my mind was on that; going where I had the right to be." Again: "When the accident happened, I was going to my place on the train. I had no other duty on the top of the cars as the train was moving off, unless the engineer calls for a signal, and generally he does do that when the train is moving off. There is occasion for it in all places where the train starts or stops, only in cities, where we aren't allowed to blow them. We are required to notice the train when it is running, to see that it is all going; the train might start and go 100 yards and then break loose."

This was, in substance, the case made by the plaintiff's evidence.

[94] The circuit court proceeded upon the ground that contributory negligence upon the part of the plaintiff was so conclusively established that it would have been compelled, in the exercise of a sound judicial discretion, to set aside any verdict returned in his favor. If the evidence, giving the plaintiff the benefit of every inference to be fairly drawn from it, sustained this view, then the direction to find for the defendant was proper. *Phœnix Mut. L. Ins. Co.* v. *Doster*, 106 U. S. 30, 32 [27: 65, 66]; *Randall* v. *Balt. & O. R. Co.* 109 U. S. 478, 482 [27: 1003, 1005]; *Anderson Co.* v. *Beal*, 113 U. S. 227, 241 [28: 966, 971]; *Goodlet* v. *Louisville & N. R. Co.* 122 U. S. 391, 411 [30: 1230, 1234.]

But we are of opinion that the question of contributory negligence should have been submitted to the jury. It cannot be said that the plaintiff was guilty of contributory negligence in staying upon the train, in the capacity of brakeman, after observing that a step was missing from one of the cars over which he might pass while discharging his duties. An employé upon a railroad train, likely to meet other trains, owes it to the public, as well as to his employer, not to abandon his post unnecessarily. Besides, the danger arising from the defective car was not so imminent as to subject him to the charge of recklessness in remaining at his post under the conductor's assurance that the car should be removed from the train when it reached the coal yard or junction, if upon examining his manifests he found that it did not contain perishable freight. *Hough* v. *Texas & P. R. Co.* 100 U. S. 224 [25:617]; *D. C.* v. *McElligott*, 117 U. S. 621, 631 [29:946,949].

But it is said that the efficient, proximate cause of the injury to the plaintiff was his use of the defective appliances at the end of the car from which he fell, when he knew and at the moment of letting himself down from that car should not have forgotten, as he said he did, that one of its steps was missing. It is undoubtedly the law that an employé is guilty of contributory negligence which will defeat his right to recover for injuries sustained in the course of his employment, where such injuries substantially resulted from dangers so obvious and threatening that a reasonably prudent man, under similar circumstances, would have avoided them if in his power to do so. He [95] will be deemed, in such case, to have assumed the risks involved in such needless exposure of himself to danger. *Hough* v. *Texas & P. R. Co.*, *D. C.* v. *McElligott*, and *Goodlett* v. *Louisville & N. R. Co.* above cited; *Northern Pac. R. Co.* v. *Herbert*, 116 U. S. 642 [29:755]. But in determining whether an employé has recklessly exposed himself to peril, or failed to exercise the care for his personal safety that might reasonably be expected, regard must always be had to the exigencies of his position, indeed, to all the circumstances of the particular occasion. In the case before us, the jury may, not unreasonably, have inferred from the evidence that while the plaintiff was passing along the tops of the cars, for the purpose of reaching his post, he was so blinded or confused by the darkness, snow and rain, or so affected by the severe cold, that he failed to observe, in time to protect himself, that the car from which he attempted to let himself down was the identical one which, during the previous part of the night, he had discovered to be without its full complement of steps. While a proper regard for his own personal safety, and his duty to his employer, required that he should bear in mind, while passing over the cars to his station, that one of them was defective in its appointments, it was also his duty to reach his post at the earliest practicable moment; for not only might the safety of the moving train have depended upon the brakemen being at their posts, but the engineer was entitled to know, as the train moved off, by signals from the brakemen, if necessary, that none of the cars constituting the train had become detached. If it be suggested that the plaintiff ought not to have left his post and gone to the caboose when the train stopped at Coldfelters, the answer furnished by the proof is that he was justified in so doing, by usage and by the extraordinary severity of the weather. And if his going back from the caboose was characterized by such haste as interfered with a critical examination of the cars as he passed over them, that may, in some measure at least, have been due to the fact that the first notice he had of the necessity of immediately returning to his post was that the train was moving off.

Without further discussion of the evidence, [96] and without intimating any opinion as to what ought to be the verdict upon the issue of contributory negligence, we are of opinion that the court erred in not submitting to the jury to determine whether the plaintiff, in forgetting,

or not recalling, at the precise moment, the fact that the car from which he attempted to let himself down was the one from which a step was missing, was in the exercise of the degree of care and caution which was incumbent upon a man of ordinary prudence in the same calling, and under the circumstances in which he was placed. If he was, then he was not guilty of contributory negligence that would defeat his right of recovery.

Judgment is reversed and the case remanded, with directions to grant a new trial.

---

[26] LEATHER MANUFACTURERS NATIONAL BANK, *Plff. in Err.*,

v.

MERCHANTS NATIONAL BANK.

(See S. C. Reporter's ed. 26-39.)

Forged indorsement of check—recovery of money paid thereon—consideration—limitation of action—New York law.

1. If a bank, upon which a check is drawn payable to a particular person or order, pays the amount of the check to one presenting it with a forged indorsement of the payee's name, both parties supposing the indorsement to be genuine, the right of action of the bank to recover back the money from the person so obtaining it accrues immediately upon the payment of the money.

2. One who by presenting forged paper to a bank procures the payment of the amount thereof to him, even if he makes no express warranty, in law represents that the paper is genuine; and, if the payment is made in ignorance of the forgery, he is liable to an action by the bank to recover back the money which, in equity and good conscience, has never ceased to be its property.

3. It is not a case in which a consideration, which had once existed, fails by subsequent election or other act of either party, or of a third person; but there is never, at any stage of the transaction, any consideration for the payment.

4. The Statute of Limitations begins to run immediately upon the payment.

5. The plaintiff's right of action did not depend upon any express promise by the defendant after the discovery of the mistake, or upon any demand by the plaintiff upon the defendant, but accrued at the date of the payment, and was, in New York, barred by the Statute of Limitations in six years from that date.

[No. 10.]

Argued Dec. 2, 5, 1887. Decided Oct. 22, 1888.

IN ERROR to the Circuit Court of the United States for the Southern District of New York, to review a judgment for plaintiff in an action to recover back the amount of a check upon which the indorsement was forged, which plaintiff paid without knowledge of the forgery. *Reversed*, on the ground that the action was barred by the Statute of Limitations.

Statement by *Mr. Justice* **Gray**:

The original action was brought December 7, 1877, by the Merchants National Bank of the City of New York against the Leather Manufacturers National Bank to recover back the sum of $17,500 paid on March 10, 1870, to the defendant, the holder of a check drawn upon the plaintiff for that amount, with interest from June 20, 1877. The defendant, among other defenses, pleaded the Statute of Limitations, and also that the plaintiff never demanded repayment or tendered the check to the defendant until long since the commencement of this action. [27]

At the trial before a jury the following facts were proved or admitted:

On March 9, 1870, the Bank of British North America, having a larger amount on deposit with the Merchants Bank, drew upon that bank a check for $17,500, payable to Margaret G. Halpine or order, and delivered it to Thomson & Ramsay; and this check, with the names of Mrs. Halpine and of William C. Barrett indorsed thereon, came to the hands of Howes & Macy, private bankers, who deposited it with the Leather Manufacturers Bank. On March 10, 1870, the Merchants Bank paid the amount of the check to the Leather Manufacturers Bank through the clearing house, and charged the amount on its own books to the Bank of British North America. By the usual course of dealing between the Bank of British North America and the Merchants Bank, the pass book containing entries of the deposits made by the one, and of the payments made by the other on account thereof, was written up and returned to the Bank of British North America fortnightly, together with the checks and other vouchers for such payments; and on March 17, 1870, the pass book containing the charge of the payment of the check in question was so balanced and returned with the check. The account between the Bank of British North America and the Merchants Bank continued to exist until February 21, 1881, the day of the trial of the action brought by the former bank against the latter, mentioned below.

At the time of the payment by the Merchants Bank to the Leather Manufacturers Bank, both parties believed Mrs. Halpine's indorsement to be genuine; whereas, in fact it had been forged by Barrett, the second indorser, who afterwards absconded. Howes & Macy failed in 1873.

The Bank of British North America, on or about January 24, 1877, first learned that Mrs. Halpine contended that her indorsement was forged, and on January 26, 1877, notified that fact to the Merchants Bank; and on June 2, 1877, demanded of that Bank payment of the amount of the check, and left the check with it that it might look into the matter. On the same day, the Merchants Bank showed the check to the Leather Manufacturers Bank, informed it that the Bank of British North America had demanded repayment of the money because the indorsement of Mrs. Halpine's name was a forgery; and made a like demand upon the Leather Manufacturers Bank, which declined to pay. On June 20, 1877, the Merchants Bank returned the check to the Bank of British North America, and that bank again demanded of the Merchants Bank payment of the amount, and tendered it the check; and it refused to pay. [28]

On August 10, 1877, the Bank of British North America gave written notice to the Merchants Bank that it had been sued for the amount of the check, by reason of the Merchants Bank having paid the same upon a forged indorsement, and that, in the event of being held liable for the amount, it should hold the Merchants Bank to its strict legal liability. The action against the Bank of British North America is reported as *Thomson* v. *Bank of British North America*, 82 N. Y. 1.

On November 7, 1877, the Bank of British

North America brought an action in a court of the State of New York against the Merchants Bank for the amount of the check, upon the ground that the payment thereof by the Merchants Bank had been made upon a forged indorsement of the payee's name, and that the amount had been demanded of the Merchants Bank by the Bank of British North America on June 20, 1877, and refused, and still remained to its credit. In that action, the Merchants Bank pleaded that the indorsement was genuine, and that the cause of action was barred by the Statute of Limitations; and, before that case came to trial, gave written notice of its having been so sued to the Leather Manufacturers Bank, in order that it might defend the suit or protect its rights as it might deem proper, and that the judgment, if adverse, might be conclusive upon it. On March 7, 1881, the Bank of British North America recovered judgment against the Merchants Bank, which was affirmed by the court of appeals. 91 N. Y. 106.

The Merchants Bank, on January 25, 1883, paid the amount of that judgment, and received the check from the Bank of British North [29] America, and on March 15, 1883, gave notice to the Leather Manufacturers Bank of having so paid, and tendered the check to it, and demanded payment of that amount, with interest from June 20, 1877, which was refused.

In the present action, the defendant, at the close of the whole evidence, asked the court to instruct the jury to return a verdict for the defendant, upon the grounds "that the cause of action, if complete, did not accrue within six years before the commencement of this action;" and "that the cause of action, if a demand and tender were necessary, had not accrued when the suit was commenced." The court declined so to instruct the jury, directed a verdict for the plaintiff for the amount of the check, with interest from June 20, 1877, and gave judgment thereon. The defendant sued out this writ of error.

Mr. **Jno. E. Parsons,** for plaintiff in error:

The suit was barred by the Statute of Limitations. The *locus* of the transaction, and of the forum, was the City of New York. The New York Statute applies. The general statute is six years.

N. Y. Code, 1876, § 382 *et seq.;* N.Y. Code, 1849, § 90 *et seq.*

There was an immediate cause of action for the return of the money.

Leonard v. *Pitney*, 5 Wend. 30; *Allen* v. *Mille*, 17 Wend. 202; *Foot* v. *Farrington*, 41 N. Y. 164; *Miller* v. *Wood*, 41 Hun, 600; *Cent. Nat. Bank* v. *North River Bank*, 44 Hun, 114, 115; *Troup* v. *Smith*, 20 Johns. 33, 34; *U. S. Bank* v. *Daniel*, 37 U. S. 12 Pet. 32, 56 (9: 989, 998); *Bree* v. *Holbech*, 2 Doug. 654; *Howell* v. *Young*, 5 Barn. & C. 259.

The check was drawn to the order of Mrs. Halpine. It was only through her that title could be made. As she did not indorse it, no title passed either to the Leather Bank or to the Merchants Bank.

Graves v. *Am. Exch. Bank*, 17 N. Y. 205; *White* v. *Continental Nat. Bank*, 64 N. Y. 316; *Espy* v. *Bank of Cincinnati*, 85 U. S. 18 Wall. 604 (21: 947); *Boston & A. R. Co.* v. *Richardson*, 135 Mass. 475.

Upon a question of the Statute of Limitations the local law prevails.

Davie v. *Briggs*, 97 U. S. 628, 637 (24: 1086, 1089); *Barrett* v. *Holmes*, 102 U. S. 651 (26: 291); *Henderson* v. *Griffin*, 30 U. S. 5 Pet. 151 (8: 79).

The law as established by the decisions of the New York courts barred the suit.

Leonard v. *Pitney*, *Allen* v. *Mille*, *Foot* v. *Farrington*, and *Cent. Nat. Bank* v. *North River Bank*, *supra;* *Bank of Utica* v. *Childs*, 6 Cow. 238; *Argall* v. *Bryant*, 1 Sandf. 98; *Bordwell* v. *Collie*, 45 N. Y. 494.

The forgery of the indorsement constitutes an immediate breach of the warranty of its genuineness.

U. S. Bank v. *Daniel*, *supra;* *Wilcox* v. *Plummer*, 29 U. S. 4 Pet. 172 (7: 821).

If to make perfect the right of action of the Merchants Bank for breach of warranty required it, the case showed that that Bank had yielded up its possession to a title paramount to its own.

Case v. *Hall*, 24 Wend. 102; *Sweetman* v. *Prince*, 26 N. Y. 224; *Burt* v. *Dewey*, 40 N. Y. 283; *McGiffin* v. *Baird*, 62 N. Y. 329; *Converse* v. *Miner*, 21 Hun, 367.

The failure by the Merchants Bank to tender the check to the Leather Bank and to demand payment precluded a recovery, on any theory of the case upon which it can be held that the claim was not barred by the Statute of Limitations.

Southwick v. *First Nat. Bank*, 84 N. Y. 420, 430; *Scholey* v. *Halsey*, 72 N. Y. 578, 582; *Stephens* v. *Bd. of Education*, 3 Hun, 712; *Abbott* v. *Draper*, 4 Denio, 51.

Mr. **John E. Burrill,** for defendant in error:

The cause of action did not accrue until June, 1877, when the British Bank for the first time objected to being charged with the amount of the check.

Merchants Nat. Bank v. *First Nat. Bank*, 8 Fed. Rep. 66; *U. S.* v. *Bank*, 6 Fed. Rep. 852; *Cowper* v. *Godmond*, 9 Bing. 748; *S. C.* 23 E. C. L. R. 453; *Churchill* v. *Bertrand*, 2 Gale & D. 551; *Ripley* v. *Withee*, 27 Tex. 14.

The money was paid by the Merchants Bank to the Leather Bank under a mistake of fact as to the genuineness of the indorsement of the check by the payee. An action to recover back money paid under a mistake of fact cannot be maintained until notice of the mistake has been given and a demand for repayment of the money made.

Southwick v. *First Nat. Bank*, 84 N. Y. 430; *Sharkey* v. *Mansfield*, 90 N. Y. 229; *Stephens* v. *Bd. of Education*, 3 Hun, 715; *U. S.* v. *Bank*, 6 Fed. Rep. 852; *Freeman* v. *Jeffries*, L. R. 4 Exch. 189; *Marine Nat. Bank* v. *City Bank*, 59 N. Y. 67; *Bank* v. *Bank*, 91 N. Y. 108; *Ganley* v. *City Nat. Bank*, 98 N. Y. 495; *Smiley* v. *Fry*, 1 Cent. Rep. 510, 100 N. Y. 263.

A transferee of securities is not bound to notify the transferrer of a lack of genuineness of the securities or of the title thereto, until the lapse of a reasonable time after the discovery of the fact.

U. S. v. *Bank*, 6 Fed. Rep. 855; *Frank* v.

Lanier, 91 N. Y. 116; *Heiser* v. *Hatch*, 86 N. Y. 614; *Canal Bank* v. *Bank*, 1 Hill (N. Y.) 291.

The Leather Bank owed no duty to the plaintiff in error to examine and ascertain whether the indorsement was genuine, before the check was paid.

Corn Exch. Bank v. *Nassau Bank*, 91 N. Y. 74; *Crawford* v. *West Side Bank*, 1 Cent. Rep. 253, 100 N. Y. 51; *White* v. *Bank*, 64 N. Y. 320; *Holt* v. *Ross*, 54 N. Y. 475; 2 Dan. Neg. Inst. 1663; *Marine Nat. Bank* v. *Nat. City Bank*, 59 N. Y. 67.

Negligence in making a payment is no defense to an action to recover back money paid under a mistake of fact.

Kingston Bank v. *Eltinge*, 40 N. Y. 391; *Mayer* v. *Mayor of N. Y.* 63 N. Y. 455.

The decision in 91 N. Y. 106, settled the question in controversy here against the plaintiff in error; and notice of the institution of that action having been given to it, the judgment recovered in that action is conclusive as to the right of the Merchants Bank to recover in this action.

Robbins v. *Chicago*, 71 U. S. 4 Wall. 657 (18: 427); *Chicago* v. *Robbins*, 67 U. S. 2 Black, 418 (17: 298); *Heiser* v. *Hatch*, 86 N. Y. 614.

[33] *Mr. Justice* **Gray** delivered the opinion of the court:

The principal question argued is whether this action was barred by the Statute of Limitations of New York, by which any action upon a contract, obligation or liability, expressed or implied, except a judgment or a sealed in-
[34] strument, must be brought within six years after the cause of action accrues. Code 1855, § 91; Code 1876, § 382.

The question then is whether, if a bank, upon which a check is drawn payable to a particular person or order, pays the amount of the check to one presenting it with a forged indorsement of the payee's name, both parties supposing the indorsement to be genuine, the right of action of the bank to recover back the money from the person so obtaining it accrues immediately upon the payment of the money, or only after a demand for its repayment.

In order to avoid confusion in dealing with this question, it is important to keep in mind the difference between the liability of a bank to a depositor, and the liability to the bank of a person who has received money from it upon a forged check or order.

It is true that the liability, in either case, is that of debtor, not that of trustee or bailee; but there the resemblance ceases.

The specific money deposited does not remain the money of the depositor, but becomes the property of the bank, to be invested and used as it pleases; its obligation to the depositor is only to pay out an equal amount upon his demand or order; and proof of refusal or neglect to pay upon such demand or order is necessary to sustain an action by the depositor against the bank. The bank cannot discharge its liability to account with the depositor to the extent of the deposit, except by payment to him, or to the holder of a written order from him, usually in the form of a check. If the bank pays out money to the holder of a check upon which the name of the depositor, or of a payee or indorsee, is forged, it is simply no payment as between the bank and the depositor; and the legal state of the account between them, and the legal liability of the bank to him, remain just as if the pretended payment had not been made. *First Nat. Bank* v. *Whitman*, 94 U. S. 343 [24: 229].

But as between the bank and the person obtaining money on a forged check or order, the case is quite different. The first step in bringing about the payment is the act of the holder of the check, in assuming and representing himself to have a right, which he has not, to receive the money. One who by presenting [35] forged paper to a bank procures the payment of the amount thereof to him, even if he makes no express warranty, in law represents that the paper is genuine, and, if the payment is made in ignorance of the forgery, is liable to an action by the bank to recover back the money which, in equity and good conscience, has never ceased to be its property. It is not a case in which a consideration, which has once existed, fails by subsequent election or other act of either party, or of a third person; but there is never, at any stage of the transaction, any consideration for the payment. *Espy* v. *Bank of Cincinnati*, 85 U. S. 18 Wall. 604 [21: 947]; *Gurney* v. *Womersley*, 4 El. & Bl. 133; *Cabot Bank* v. *Morton*, 4 Gray, 156; *Aldrich* v. *Jackson*, 5 R. I. 218; *White* v. *Continental Nat. Bank*, 64 N. Y. 316.

Whenever money is paid upon the representation of the receiver that he has either a certain title in property transferred in consideration of the payment, or a certain authority to receive the money paid, when in fact he has no such title or authority, then, although there be no fraud or intentional misrepresentation on his part, yet there is no consideration for the payment; and the money remains, in equity and good conscience, the property of the payer, and may be recovered back by him, without any previous demand, as money had and received to his use. His right of action accrues, and the Statute of Limitations begins to run, immediately upon the payment.

Thus, in the early case of *Bree* v. *Holbech*, 2 Doug. 654, where an administrator received the amount of the mortgage money upon his assignment of a mortgage purporting to be made to the deceased, but in fact a forgery, of which both parties were ignorant, it was held, by *Lord* Mansfield and the Court of King's Bench, that the right of action to recover back from the administrator the money so paid was barred by the Statute of Limitations in six years from the time of the payment.

So, in *Utica Bank* v. *Van Gieson*, 18 Johns. 485, where a promissory note payable at the Bank of Geneva was left by the indorsers with the Utica Bank for collection, and sent by it to the Bank of Geneva for that purpose, and the amount was afterwards paid by the Utica Bank to the indorsers upon the mistaken supposition [36] that it had been paid to the Bank of Geneva by the maker, when in fact it had not, and it was not pretended that the Utica Bank had been guilty of any negligence, the Supreme Court of New York held that notice of the fact that the note had not been paid by the maker was unnecessary to maintain an action by the Utica Bank to recover back the money from the indorsers; and *Chief Justice* Spencer said: "The

plaintiffs' ground of action, then, is that the money was paid to the defendants under a mistake of facts. The defendants are not bailees or trustees of the money thus received. It was paid and received as their money, and not as money to be kept for the plaintiffs. In such a case, it was not necessary to make a demand prior to the suit; for a request was not essential to the maintenance of the action; nor did the defendants' duty to return the money erroneously paid arise upon request."

In *Bank of United States* v. *Daniel*, the acceptor and indorsers, upon taking up a bill of exchange for $10,000, which had been duly protested for nonpayment, paid 10 per cent as damages, under a mistake as to the local law upon the subject. Upon a bill in equity to relieve against the mistake and recover back the money, this court, while holding that such a mistake gave no ground for relief, also held that, if it did, the Statute of Limitations ran, in equity as well as at law, from the time of the payment, saying: "If the $1,000 claimed as damages were paid to the bank at the time the bill of exchange was taken up, then the cause of action to recover the money (had it been well founded) accrued at the time the mistaken payment was made, which could have been rectified in equity, or the money recovered back by a suit at law." 37 U. S. 12 Pet. 32, 56 [9: 989, 998].

In *Dill* v. *Wareham*, 7 Met. 438, the Supreme Judicial Court of Massachusetts, speaking by *Chief Justice* Shaw, held that a party receiving money in advance on a contract which he had no authority to make, and afterwards refused to fulfill, was liable to the other party in an action for money had and received, without averment or proof of any previous demand. And in *Sturgis* v. *Preston*, 134 Mass. 372, where [37] land was sold for a certain sum by the square foot, and the purchaser, relying on the vendor's statement of the number of feet, made payment accordingly, and afterwards discovered that the number had been overstated, but disclaimed all charge of fraud or fraudulent concealment on the part of the vendor, it was held that the right of action to recover back the excess paid accrued immediately, without any previous demand, and was barred by the Statute of Limitations in six years from the date of the payment. See also *Earle* v. *Bickford*, 6 Allen, 549; *Blethen* v. *Lovering*, 58 Maine, 487.

The judgment of the circuit court in the present case appears to have been based upon the decision in *Merchants National Bank* v. *First National Bank*, 4 Hughes, 9, which proceeds upon grounds inconsistent with the principles and authorities above stated, and cites no case except the very peculiar one of *Cowper* v. *Godmond*, 9 Bing. 748; *S. C.* 3 Moore & S. 219; in which the right of action to recover back money paid for a grant of an annuity, the memorial of which was defective, was held not to accrue until the grantor elected to avoid it on that ground, the annuity apparently being considered as not absolutely void, bnt as voidable only at the election of the grantor. See *Churchill* v. *Bertrand*, 3 Q. B. N. S. 568; *S. C.* 2 Gale & D. 548.

Although some of the opinions of the Court of Appeals of New York, in the cases cited at the bar, contain *dicta* which, taken by themselves and without regard to the facts before the court, might seem to support the position of the defendant in error, yet the judgments in those cases, upon full examination, appear to be quite in accord with the views which we have expressed.

The cases of *Thomson* v. *Bank of British North America*, 82 N. Y. 1, and *Bank of British North America* v. *Merchants National Bank*, 91 N. Y. 106, were actions by depositors against their respective bankers, and were therefore held not to be barred until six years after demand.

In *Southwick* v. *First National Bank*, 84 N. Y. 420, the decision was that there was no such mistake as entitled the party paying the money to reclaim it; and in *Sharkey* v. *Mansfield*, 90 N. Y. 227, it was adjudged that money paid by [38 mistake, but received with full knowledge of all the facts, might be recovered back without previous demand; and what was said in either opinion as to the necessity of a demand where both parties act under mistake was *obiter dictum*.

Two other cases in that court were decided together, and on the same day as *Bank of British North America* v. *Merchants Bank*, above cited.

In one of them, the defendants, who had innocently sold to the plaintiffs a forged note as genuine, and, upon being informed of the forgery and requested to pay back the purchase money, had expressly promised to do so if the plaintiffs should be obliged to pay a third person to whom they had in turn sold the note, were therefore held not to be discharged from their liability to refund by the plaintiffs' having awaited the determination of a suit by that person against themselves, before returning the note to the defendants. *Frank* v. *Lanier*, 91 N. Y. 112.

In the other case, a bank which had paid a check upon a forged indorsement supposed by both parties to be genuine, was held entitled to recover back the money, with interest from the time of payment—necessarily implying that the right of action accrued at that time. *Corn Exchange Bank* v. *Nassau Bank*, 91 N. Y. 74.

In the case at bar, as in the case last cited, the plaintiff's right of action did not depend upon any express promise by the defendant after the discovery of the mistake, or upon any demand by the plaintiff upon the defendant, or by the depositor or any other person upon the plaintiff; but it was to recover back the money, as paid without consideration, and had and received by the defendant to the plaintiff's use. That right accrued at the date of the payment, and was barred by the Statute of Limitations in six years from that date. For this reason, without considering any other ground of defense, the order must be:

Judgment reversed, and case remanded to the Circuit Court, with directions to set aside the verdict and to order a new trial.

Mr. Justice **Blatchford** did not sit in this [39 case, or take any part in the decision.

WESTERN UNION TELEGRAPH COMPANY, *Plf. in Err.*,

v.

COMMONWEALTH OF PENNSYLVANIA.

(See S. C. Reporter's ed. 39-40.)

State tax on telegraph messages.

The Commonwealth of Pennsylvania is not entitled to recover of a telegraph company taxes on telegraphic messages sent, except in reference to messages transmitted wholly within the State. *Western Union Tel. Co.* v. *Texas*, 105 U. S. 460 (26: 1067); *Ratterman* v. *Western Union Tel. Co.* 127 U. S. 411 (32: 229).

[No. 56.]

Submitted Oct. 18, 1888. Decided Oct. 22, 1888.

IN ERROR to the Supreme Court of the State of Pennsylvania, to review a judgment against plaintiff in error for taxes on telegraphic messages. *Reversed.*

The facts are stated by the court.

Reported below, 110 Pa. 405.

Messrs. **M. E. Olmsted** and *Brown & Wells*, for plaintiff in error:

The domicil of a corporation is the State of its origin.

Potter, Corp. § 10.

It cannot migrate to another sovereignty.

Bank of Augusta v. *Earle*, 38 U. S. 13 Pet. 586 (10: 306); *Paul* v. *Va.* 75 U. S. 8 Wall. 168 (19: 357); *St. Louis* v. *Ferry Co.* 78 U. S. 11 Wall. 423 (20: 192).

The power of taxation is necessarily limited to subjects within the jurisdiction of the State.

McCulloch v. *Md.* 4 Wheat. 429 (4: 607); *Hays* v. *Pacific Mail Steamship Co.* 58 U. S. 17 How. 596 (15: 254); *Morgan* v. *Parham*, 83 U. S. 16 Wall. 471 (21: 303); *People, Hoyt*, v. *Comrs. of Taxes*, 23 N. Y. 224; *People* v. *Comrs. of Taxes*, 58 N. Y. 242; *State* v. *Engle*, 34 N. J. Law, 425; *Gloucester Ferry Co.* v. *Pa.* 114 U. S. 196 (29: 158); *State Freight Tax*, 82 U. S. 15 Wall. 232 (21: 146).

The interstate business of a telegraph company is not subject to state taxation in any way.

Leloup v. *Port of Mobile*, 127 U. S. 640 (32: 311); *Walling* v. *Mich.* 116 U. S. 446 (29: 691); *Pickard* v. *Pullman Southern Car Co.* 117 U. S. 34 (29: 785); *Wabash etc. R. Co.* v. *Ill.* 118 U. S. 557 (30: 244); *Fargo* v. *Mich.* 121 U. S. 230 (30: 888); *Phila. etc. Steamship Co.* v. *Pa.* 122 U. S. 326 (31: 1200).

A State cannot regulate or tax the operations or objects of interstate or foreign commerce.

H. & St. Jo. R. Co. v. *Husen*, 95 U. S. 465 (24: 527); *Cook* v. *Pa.* 97 U. S. 566 (24: 1015); *Guy* v. *Baltimore*, 100 U. S. 434 (25: 743); *Webber* v. *Va.* 103 U. S. 344 (26: 565); *Moran* v. *N. O.* 112 U. S. 69 (28: 653); *Walling* v. *Mich.*, *Pickard* v. *Pullman Southern Car Co.*, *Wabash etc. R. Co.* v. *Ill.*, and *Fargo* v. *Mich. supra*; *Robbins* v. *Shelby Co. Tax. Dist.* 120 U. S. 489 (30: 694).

Messrs. **John F. Sanderson**, *Dep. Atty-Gen.*, and **W. S. Kirkpatrick**, *Atty-Gen.*, for defendant in error.

Mr. Chief Justice **Fuller** delivered the opinion of the court:

Judgment was rendered against plaintiff in error for taxes on telegraphic messages sent from point to point within the State of Pennsylvania; on messages sent from points within the State to points in other States; on messages sent from points in other States to points within the State, and on messages sent to and from points in other States, which passed over lines partly within the State; and the record discloses the several amounts of taxes upon the several classes of messages, which, with commissions and interest, make up the total recovery. It is clear, and this is conceded by the defendant in error, that, under the decisions in this court [40] in *Western Union Telegraph Company* v. *Texas*, 105 U.S. 460 [26: 1067], and *Ratterman* v. *Western Union Telegraph Company*, 127 U. S. 411 [32: 229], the Commonwealth was not entitled to recover for the taxes in question, excepting in respect to the messages transmitted wholly within the State. *The judgment will therefore be reversed*, and the cause remanded for such further proceedings as justice may require.

Ordered accordingly.

JOHN S. KIDD, *Plff. in Err.*, [1]

v.

I. E. PEARSON *et al.*

(See S. C. Reporter's ed. 1-26.)

Iowa law authorizing the abating as a nuisance of a distillery used for unlawful manufacture and sale of intoxicating liquors, constitutional—power of a State—not an open question.

1. The law of Iowa authorizing the abating as a nuisance of a distillery used for the unlawful manufacture and sale of intoxicating liquors (chap. 6. tit. 11 of the Code of Iowa, amended by chapter 143 of the Laws of 1884) does not conflict with section 8, article 1 of the Constitution of the United States, by undertaking to regulate commerce between the States.

2. Such law of Iowa does not conflict with the Fourteenth Amendment to the Constitution of the United States, by depriving the owners of the distillery of their property therein without due process of law.

3. A State has the right to prohibit or restrict the manufacture of intoxicating liquors within its limits; to prohibit all sale and traffic in them in the State; to inflict penalties for their manufacture and sale, and to provide regulations for the abatement as a common nuisance of the property used for such forbidden purposes.

4. Whether a State, in the exercise of its undisputed power of local administration, can enact a statute prohibiting within its limits the manufacture of intoxicating liquors except for certain purposes, is no longer an open question before this court.

[No. 779.]

Argued April 4, 1888. Decided Oct. 22, 1888.

IN ERROR to the Supreme Court of the State of Iowa, to review a judgment ordering that a distillery, used by plaintiff in error, be abated as a nuisance and enjoining him from the manufacture therein of intoxicating liquors. *Affirmed.*

Reported below, *sub nom. Pearson* v. *International Distillery*, 72 Iowa, 348.

Statement by *Mr. Justice* **Lamar:**

This is a writ of error to the Supreme Court [2] of the State of Iowa, allowed by the Chief Justice thereof, upon the ground that the judgment in the case affirmed the validity of a statute of that State, which the plaintiff in error claimed to be in conflict with the Federal Constitution. The case arose upon a petition in equity, filed December 24, 1885, in the Circuit Court of Polk County, Iowa, by defendants in error, I. E. Pearson and S. J. Loughran, against the plaintiff in error, J. S. Kidd, praying that a certain distillery erected and used by

said Kidd for the unlawful manufacture and sale of intoxicating liquors be abated as a nuisance, and that the said Kidd be perpetually enjoined from the manufacture therein of all intoxicating liquors. The provisions of the law under which these proceedings were instituted are found in chapter 6, title 11, of the Code of Iowa, amended by chapter 143 of the Acts of the General Assembly in 1884. The sections necessary to be quoted for the purposes of this decision are as follows:

Section 1523 provides:

No person shall manufacture or sell, by himself, his clerk, steward or agent, directly or indirectly, any intoxicating liquors, except as hereinafter provided; and the keeping of intoxicating liquors, with intent on the part of the owner thereof, or any person acting under his authority or by his permission, to sell the same within this State, contrary to the provisions of this chapter, is hereby prohibited; and the intoxicating liquor so kept, together with the vessels in which it is contained, is declared a nuisance, and shall be forfeited and dealt with as hereinafter provided.

Section 1524 provides:

Nothing in this chapter shall be construed to forbid the sale by the importer thereof of foreign intoxicating liquor imported under the authority of the laws of the United States regarding the importation of such liquors and in accordance of [with] such laws; *Provided*, That the said liquor at the time of said sale by said importer remains in the original casks or packages in which it was by him imported, and in quantities not less than the quantities in which the laws of the United States require such liquors to be imported, and is sold by him in said original casks or packages and in said quantities only; and nothing contained in this law shall prevent any persons from manufacturing in this State liquors for the purpose of being sold, according to the provisions of this chapter, to be used for mechanical, medicinal, culinary, or sacramental purposes. [3]

Section 1525 prescribes a penalty for a violation of the law by manufacturers, as follows:

Every person who shall manufacture any intoxicating liquors as in this chapter prohibited, shall be deemed guilty of a misdemeanor, and upon his first conviction for said offense shall pay a fine of two hundred dollars and costs of prosecution, or be imprisoned in the county jail not to exceed six months; and on his second and every subsequent conviction for said offense he shall pay a fine of not less than five hundred dollars, nor more than one thousand dollars, and costs of prosecution, and be imprisoned in the county jail one year.

Section 1526 defines who may be permitted to manufacture under the law, and for what purpose the manufacture may be carried on, as follows:

Any citizen of the State, except hotel keepers, keepers of saloons, eating houses, grocery keepers, and confectioners, is hereby permitted, within the county of his residence, to manufacture or buy and sell intoxicating liquors for mechanical, medicinal, culinary, or sacramental purposes only, provided he shall first obtain permission from the board of supervisors of the county in which such business is conducted, as follows.

Sections 1527 and 1529 provide for the manner of obtaining the permit, and section 1530 sets out the conditions under which it may be granted. It is as follows:

At such final hearing, any resident of the county may appear and show cause why such permit should not be granted; and the same shall be refused, unless the board shall be fully satisfied that all the requirements of the law have, in all respects, been fully complied with, that the applicant is a person of good moral character, and that, taking into consideration the wants of the locality and the number of permits already granted, such permit would be necessary and proper for the accommodation of the neighborhood.

[4] The manufacturer, like the seller, is required to make monthly reports to the county auditor, the evident purpose of the requirement being to show whether or not the holder of a permit was manufacturing or selling in compliance with the law.

Section 1543 provides for proceedings in equity to abate and enjoin unlawful manufacture.

The averments of the petition are, in substance, that the distillery described therein was erected by said J. S. Kidd for the manufacture of intoxicating liquors, contrary to the statute of Iowa; that said Kidd had been, ever since the 4th of July, 1884, and is still, engaged in the manufacture of intoxicating liquors, upon the premises aforesaid, for other than mechanical, medicinal, culinary and sacramental purposes; with the concluding averment "that the defendant manufactures, keeps for sale and sells, within this State and at the place aforesaid, intoxicating liquors, to be taken out of that State and there used as a beverage, and for other purposes than for mechanical, medicinal, culinary and sacramental purposes, contrary to the statute of Iowa."

Kidd in his answer specifically pleaded that he is now, and has been ever since the 4th of July, 1884, authorized by the board of supervisors to manufacture and sell intoxicating liquors, except as prohibited by law; and that, in the manufacture and sale of liquors, this defendant has at all times complied with the requirements of the law in that behalf. Upon the trial it was proved by undisputed evidence that Kidd held each year, from July 4, 1884, a permit regularly issued from the board of supervisors of Polk County, covering the period of the alleged violations of law, authorizing him to manufacture and sell intoxicating liquors for mechanical, medicinal, culinary and sacramental purposes; that his monthly reports, made on oath, in compliance with the requirements of the law, show that there were no sales for mechanical, medicinal, culinary and sacramental or any other purpose, in the State of Iowa; and that all the manufactured liquors were for exportation and were sold outside of the State of Iowa. A decree was rendered against Kidd, ordering that the said distillery be abated as a nuisance, according to [5] the prayer of the petitioner, and enjoining said Kidd from the manufacture therein of any and all intoxicating liquors. On appeal to the Supreme Court of Iowa this decree was affirmed by that court. Hence this writ of error.

Messrs. Benjamin Harris Brewster and **F. W. Lehmann**, for plaintiff in error:

Where the subject is national in its character, the power of Congress is exclusive of all state authority.

Welton v. *Mo.* 91 U. S. 275 (23:347); *Mobile Co.* v. *Kimball*, 102 U. S. 691 (26:238); *Brown* v. *Houston*, 114 U. S. 622 (29:257).

The nonexercise of its power by Congress is tantamount to a declaration that such commerce shall be free.

Wabash etc. R. Co. v. *Ill.* 118 U. S. 557 (30:244); *Passenger Cases*, 48 U. S. 7 How. 416 (12:758).

Intoxicating liquors are property, and traffic in them is within the meaning of the term *commerce* in the Federal Constitution.

Boston Beer Co. v. *Mass.* 97 U. S. 25 (24:989); *Monty* v. *Arneson*, 25 Iowa, 383; *Gibbons* v. *Ogden*, 22 U. S. 9 Wheat. 1 (6:23).

Exports and imports stand upon precisely the same footing.

Almy v. *Cal.* 65 U. S. 24 How. 169 (16:644); *State Freight Tax*, 82 U. S. 15 Wall. 232 (21:146); *Phila. etc. Steamship Co.* v. *Pa.* 122 U. S. 326 (30:1200); *Robbins* v. *Shelby Co. Tax. Dist.* 120 U. S. 489 (30:694).

The limitation of authority is to purely domestic concerns.

Hall v. *DeCuir*, 95 U. S. 485 (24:547); *Western Union Tel. Co.* v. *Pendleton*, 122 U. S. 347 (31:1187).

The State must not encroach upon the free exercise of the power vested in Congress by the Constitution.

Tiernan v. *Rinker*, 102 U. S. 127 (26:104).

The police power cannot be set up to control the inhibitions of the Federal Constitution or the powers of the United States Government created thereby.

N. O. Gas Co. v. *La. Light Co.* 115 U. S. 650 (29:516); *Hannibal & St. Jo. R. Co.* v. *Husen*, 95 U. S. 465 (24:527); *Mayor of N. Y.* v. *Miln*, 36 U. S. 11 Pet. 102 (9:648); *Chy Lung* v. *Freeman*, 92 U. S. 275 (23:550); *People* v. *Compagnie Générale*, 107 U. S. 59 (27:383).

The States, under cover of exerting their police powers, may not substantially prohibit or burden interstate or foreign commerce.

Niles v. *Fries*, 35 Iowa, 41; *Becker* v. *Betten*, 39 Iowa, 669; *Preston* v. *Drew*, 33 Maine, 558; *Crandall* v. *Nev.* 73 U. S. 6 Wall. 35 (18:745); *Citizens Savings & Loan Asso.* v. *Topeka*, 87 U. S. 20 Wall. 655 (22:455); *State* v. *Saunders*, 19 Kan. 127.

The statute contravenes article 14 of Amendments to the Constitution, which enacts: "Nor shall any State deprive any person of life, liberty or property, without due process of law."

Pumpelly v. *Green Bay Co.* 80 U. S. 13 Wall. 177 (20:560); *Preston* v. *Drew*, and *Crandall* v. *Nev. supra; Re Jacobs*, 98 N. Y. 98.

Messrs. **C. C. Cole** and *John S. Runnells*, for defendants in error:

The fact that intoxicating liquors are an article of commerce does not deprive the State of the right to prohibit their manufacture.

Passenger Cases, 48 U. S. 7 How. 416 (12:758); *Welton* v. *Mo.* 91 U. S. 275 (23:347); *Sinking Fund Cases*, 99 U. S. 718 (25:496); *Mugler* v. *Kansas*, 123 U. S. 623 (31:205).

The prohibition of the manufacture of intoxicating liquors is within the police powers of the State.

Com. v. *Alger*, 7 Cush. 53; *Boston Beer Co.* v. *Mass.* 97 U. S. 33 (24:991); *Stone* v. *Miss.* 101 U. S. 814 (25:1079); *License Cases*, 46 U. S. 5 How. 504 (12:256); *Mayor of N. Y.* v. *Miln*, 36 U. S. 11 Pet. 102 (9:648); *Hannibal & St. Jo. R. Co.* v. *Husen*, 95 U. S. 468 (24:529); *State* v. *Stucker*, 58 Iowa, 496; *Thurlow* v. *Com.* 46 U. S. 5 How. 586 (12:293).

The Iowa Statute does not contravene article 14 of Amendments to the Constitution.

Mugler v. *Kansas, supra; Pumpelly* v. *Green Bay Co.* 80 U. S. 13 Wall. 177 (20:560).

[15] *Mr. Justice* **Lamar** delivered the opinion of the court:

The Supreme Court of Iowa, in its opinion, a copy of which, duly authenticated, is found in the record, having been transmitted according to our 8th Rule of Practice, held the sections in question to mean: (1), that foreign intoxicating liquors might be imported into the State, and there kept for sale by the importer, in the original packages (or for transportation in such packages and sale beyond the limits of the State); (2), that intoxicating liquors might be manufactured and sold within the State for mechanical, medicinal, culinary and sacramental purposes, but for no other—not even for the purpose of transportation beyond the limits of the State; (3), that the statute thus construed raised no conflict with the Constitution of the United States, and was therefore valid.

As the record presents none of the exceptional conditions which sometimes impel this court to disregard inadmissible constructions given by state courts to even their own state statutes and State Constitutions, we shall adopt the construction of the statute of Iowa under consideration, which has been given it by the supreme court of that State.

The questions, then, for this court to determine are: 1. Does the statute as thus construed conflict with section 8, article 1, of the Constitution of the United States, by undertaking to regulate commerce between the States? and 2. Does it conflict with the Fourteenth Amendment to that Constitution by depriving the owners of the distillery of their property therein without "due process of law?" All of the assignments of error offered are but variant statements of one or the other of these two propositions.

The second of the propositions has been disposed of by this court in the case of *Mugler* v. *Kansas*, 123 U. S. 623 [31:205], wherein this very question was raised upon a statute similar, in all essential respects, to the provisions of the Iowa Code whose validity is contested. The court decided that a State has the right to prohibit or restrict the manufacture of intoxicating liquors within her limits; to prohibit all sale and traffic in them in said State; to inflict penalties for such manufacture and sale; and to provide regulations for the abatement as a common nuisance of the property used for such forbidden purposes; and that such legislation by a State is a clear exercise of her undisputed police power, which does not abridge the liberties or immunities of citizens of the United States, nor deprive any person of property without due process of law, nor in any way contravenes any provision of the Fourteenth Amendment of the Constitution of the United States. Upon the authority of that case, and of the numerous cases cited in the opinion of the court, we concur in the decision of the Iowa courts that the provisions here in question are not in conflict with the said amendment. The only question before us, therefore, is as to the relation of the Iowa Statutes to the regulation of commerce among the States. [16]

The line which separates the province of federal authority, over the regulation of commerce, from the powers reserved to the States has engaged the attention of this court in a great number and variety of cases. The decisions in these cases, though they do not in a single instance assume to trace that line throughout its entire extent, or to state any rule further than

to locate the line in each particular case as it arises, have almost uniformly adhered to the fundamental principles which *Chief Justice* Marshall, in the case of *Gibbons* v. *Ogden*, 22 U. S. 9 Wheat. 1 [6:23], laid down as to the nature and extent of the grant of power to Congress on this subject, and also of the limitations, express and implied, which it imposes upon state legislation with regard to taxation, to the control of domestic commerce, and to all persons and things within its limits, of purely internal concern.

According to the theory of that great opinion, the supreme authority in this country is divided between the Government of the United [17] States, whose action extends over the whole Union, but which possesses only certain powers enumerated in its written Constitution, and the separate governments of the several States, which retain all powers not delegated to the Union. The power expressly conferred upon Congress to regulate commerce is absolute and complete in itself, with no limitations other than are prescribed in the Constitution; is to a certain extent exclusively vested in Congress, so far free from state action; is coextensive with the subject on which it acts, and cannot stop at the external boundary of a State, but must enter into the interior of every State whenever required by the interests of commerce with foreign Nations, or among the several States. This power, however, does not comprehend the purely internal domestic commerce of a State which is carried on between man and man within a State or between different parts of the same State.

The distinction is stated in the following comprehensive language:

"The genius and character of the whole government seem to be that its action is to be applied to all the external concerns of the Nation, and to those internal concerns which affect the States generally; but not to those which are completely within a particular State, which do not affect other States, and with which it is not necessary to interfere for the purpose of executing some of the general powers of the government. The completely internal commerce of a State, then, may be considered as reserved for the State itself." p. 195, [6: 70].

Referring to certain laws of State Legislatures which had a remote and considerable influence on commerce, the court said that the acknowledged power of the State to regulate its police, its domestic trade, and to govern its own people, may enable it to legislate over this subject to a great extent; but these and other state laws of the same kind are not considered as an exercise of the power to regulate commerce with foreign Nations and among the several States, or enacted with a view to it; but, on the contrary, are considered as flowing from the acknowledged power of a State to provide for the safety and welfare of its people, and [18] form a part of that legislation which embraces everything within the territory of a State not surrendered to the general government. Sacred, however, as these reserved powers are regarded, the court is particular to declare with emphasis the supreme and paramount authority of the Constitution and laws of the United States, relating to the regulation of commerce with foreign Nations, and among the several States; and that whenever these reserved powers, or any of them, are so exercised as to come in conflict with the free course of the powers vested in Congress, the law of the State must yield to the supremacy of the federal authority, though such law may have been enacted in the exercise of a power undelegated and indisputably reserved to the States.

In the light of these principles, and those which this court in its numerous decisions has added in illustration and more explicit development, it will not be difficult to determine whether the law of Iowa under consideration invades, either in purpose or effect, the domain of federal authority.

To support the affirmative, the plaintiff in error maintains that alcohol is, in itself, a useful commodity, not necessarily noxious, and is a subject of property; that the very statute under consideration, by various provisions, and especially by those which permit, in express terms, the manufacture of intoxicating liquors for mechanical, medicinal, culinary or sacramental purposes, recognizes those qualities, and expressly authorizes the manufacture; that the manufacture being thus legalized, alcohol not being *per se* a nuisance, but recognized as property and the subject of lawful commerce, the State had no power to prohibit the manufacture of it for foreign sales.

The main vice in this argument consists in the unqualified assumption that the statute legalizes the manufacture. The proposition that, supposing the goods were once lawfully called into existence, it would then be beyond the power of the State either to forbid or impede their exportation, may be conceded. Here, however, the very question underlying the case is whether the goods ever came lawfully into existence. It is a grave error to say that the statute "expressly authorized" the manufacture, for it did not; to say that it had not prohibited the manufacture, for it had done so; to say that the goods were of Iowa's law- [19] ful manufactures, for that is substantially the very point at issue. The exact statute is this: "No person shall manufacture *or* sell, . . . directly or indirectly, any intoxicating liquors, except as hereinafter provided." In a subsequent section it is provided further, that "Nothing contained in this law shall prevent any persons from manufacturing in this State liquors for the purpose of being sold according to the provisions of this chapter, to be used for mechanical, medicinal, culinary or sacramental purposes." Here then is, first, a sweeping prohibition against, not the manufacture *and* sale; not a dealing which is composed of both steps, and consequently must include manufacture as well as sale, or, *e converso*, sale as well as manufacture, in order to incur the denunciation of the statute, but against either the sale *or* the manufacture. The conjunction is disjunctive. The sale is forbidden, the manufacture is forbidden; and each is forbidden independently of the other. Such being the case, on the subject of the lawfulness or unlawfulness of the *manufacture* (which is the point before the court), it is useless to argue as to the conditions under which it is permissible to hold intoxicating liquors in possession, or to sell them.

Looking again to the statute, we find that

the unqualified prohibition of any and all manufacture made by section 1523 is by the joint operation of a proviso in section 1524 and of sections 1526 and 1530, modified by four exceptions, viz.: sale for mechanical purposes, to an extent limited by the wants of the particular locality of the seller; sale for medicinal purposes, to the same extent; sale for culinary purposes, to the same extent; and sale for sacramental purposes, to the same extent. The supreme court of the State held (and we agree with it) that these exceptions do not include sales outside of the State. The effect of the statute, then, is simply and clearly to prohibit all manufacture of intoxicating liquors except for one or more of the four purposes specified. "For the purpose," says the statute. The excepted purpose is all that saves it from being, *ab initio* and through each and every step of its progress, unlawful.

It is a mistake to say, as to this case, that the [20] act of transporting the alcohol from the State in the course of lawful commerce with other States not being a crime, to perform that act was not a criminal intent, no matter when formed, whether before or after the alcohol was manufactured. It is not the criminality of the intent to *export* that is here the question, but it is the innocence or criminality, under the statute, of the *manufacture*, in the absence of all four of the specific exceptions to the prohibition, the actual and controlling and *bona fide* presence of at least one of which was indispensable to the legality of the manufacture.

We think the construction contended for by plaintiff in error would extend the words of the grant to Congress, in the Constitution, beyond their obvious import, and is inconsistent with its objects and scope. The language of the grant is: "Congress shall have power to regulate commerce with foreign Nations and among the several States," etc. These words are used without any veiled or obscure signification. "As men whose intentions require no concealment generally employ the words which most directly and aptly express the ideas they intend to convey, the enlightened patriots who framed our Constitution, and the people who adopted it, must be understood to have employed words in their natural sense and to have intended what they have said." *Gibbons* v. *Ogden*, *supra*.

No distinction is more popular to the common mind, or more clearly expressed in economic and political literature, than that between manufactures and commerce. Manufacture is transformation—the fashioning of raw materials into a change of form for use. The functions of commerce are different. The buying and selling and the transportation incidental thereto constitute commerce; and the regulation of commerce in the constitutional sense embraces the regulation at least of such transportation. The legal definition of the term as given by this court in *County of Mobile* v. *Kimball*, 102 U. S. 691, 702 [26: 238, 241], is as follows: "Commerce with foreign Nations and among the States, strictly considered, consists in intercourse and traffic, including in these terms navigation and the transportation [21] and transit of persons and property, as well as the purchase, sale, and exchange of commodities." If it be held that the term includes the regulation of all such manufactures as are intended to be the subject of commercial transactions in the future, it is impossible to deny that it would also include all productive industries that contemplate the same thing. The result would be that Congress would be invested, to the exclusion of the States, with the power to regulate, not only manufacture, but also agriculture, horticulture, stock raising, domestic fisheries, mining—in short, every branch of human industry. For is there one of them that does not contemplate, more or less clearly, an interstate or foreign market? Does not the wheat grower of the Northwest, and the cotton planter of the South, plant, cultivate and harvest his crop with an eye on the prices at Liverpool, New York and Chicago? The power being vested in Congress and denied to the States, it would follow as an inevitable result that the duty would devolve on Congress to regulate all of these delicate, multiform, and vital interests—interests which in their nature are, and must be, local in all the details of their successful management.

It is not necessary to enlarge on, but only to suggest, the impracticability of such a scheme, when we regard the multitudinous affairs involved, and the almost infinite variety of their minute details.

It was said by *Chief Justice* Marshall that it is a matter of public history that the object of vesting in Congress the power to regulate commerce with foreign Nations and among the several States was to insure uniformity of regulation against conflicting and discriminating state legislation. See also *County of Mobile* v. *Kimball*, *supra*, 697 [26: 240].

This being true, how can it further that object so to interpret the constitutional provision as to place upon Congress the obligation to exercise the supervisory powers just indicated? The demands of such a supervision would require, not uniform legislation generally applicable throughout the United States, but a swarm of statutes only locally applicable and utterly inconsistent. Any movement toward the establishment of rules of production in this vast country, with its many different climates [22] and opportunities, could only be at the sacrifice of the peculiar advantages of a large part of the localities in it, if not of every one of them. On the other hand, any movement toward the local, detailed and incongruous legislation required by such an interpretation would be about the widest possible departure from the declared object of the clause in question. Nor this alone. Even in the exercise of the power contended for, Congress would be confined to the regulation, not of certain branches of industry, however numerous, but to those instances in each and every branch where the producer contemplated an interstate market. These instances would be almost infinite, as we have seen; but still there would always remain the possibility, and often it would be the case that the producer contemplated a domestic market. In that case the supervisory power must be executed by the State; and the interminable trouble would be presented, that whether the one power or the other should exercise the authority in question would be determined, not by any general or intelligible rule, but by the secret and changeable intention

of the producer in each and every act of production. A situation more paralyzing to the State Governments, and more provocative of conflicts between the General Government and the States, and less likely to have been what the framers of the Constitution intended, it would be difficult to imagine.

We find no provisions in any of the sections of the statute under consideration, the object and purpose of which are to exert the jurisdiction of the State over persons or property or transactions within the limits of other States; or to act upon intoxicating liquors *as* exports; or while they are in process of exportation or importation. Its avowed object is to prevent, not the carrying of intoxicating liquors *out* of the State, but to prevent their manufacture, except for specified purposes, *within* the State. It is true that, notwithstanding its purposes and ends are restricted to the jurisdictional limits of the State of Iowa, and apply to transactions wholly internal and between its own citizens, its effects may reach beyond the State by lessening the amount of intoxicating liquors exported. But it does not follow that, because [23] the products of a domestic manufacture may ultimately become the subjects of interstate commerce, at the pleasure of the manufacturer, the legislation of the State respecting such manufacture is an attempted exercise of the power to regulate commerce exclusively conferred upon Congress. Can it be said that a refusal of a State to allow articles to be manufactured within her borders (for export) any more directly or materially affects her external commerce than does her action in forbidding the retail within her borders of the same articles after they have left the hands of the importers? That the latter could be done was decided years ago; and we think there is no practical difference in principle between the two cases.

"As has been often said, legislation (by a State) may in a great variety of ways affect commerce and persons engaged in it, without constituting a regulation of it within the meaning of the Constitution," unless, under the guise of police regulations, it imposes a direct burden upon interstate commerce, or directly interferes with its freedom. *Hall* v. *De Cuir*, 95 U. S. 485, 487 [24: 547]; *Chief Justice* Waite delivering the opinion of the court in that case, citing *Sherlock* v. *Alling*, 93 U. S. 103 [23: 820]; *State Tax on Railway Gross Receipts*, 82 U. S. 15 Wall. 284 [21: 164]; *Munn* v. *Ill.*, and *Chicago, B. & Q. R. Co.* v. *Iowa*, 94 U. S. 113, 155 [24: 77, 94]; *Wilson* v. *Black Bird Creek Marsh Co.* 27 U. S. 2 Pet. 245 [7: 412]; *Pound* v. *Turck*, 95 U. S. 459 [24: 525]; *Gilman* v. *Philadelphia*, 70 U. S. 3 Wall. 713 [18: 96]; *Gibbons* v. *Ogden*, *supra;* and *Cooley* v. *Board of Wardens*, 53 U. S. 12 How. 299 [13: 996].

We have seen that whether a State, in the exercise of its undisputed power of local administration, can enact a statute prohibiting within its limits the manufacture of intoxicating liquors, except for certain purposes, is not any longer an open question before this court. Is that right to be overthrown by the fact that the manufacturer *intends* to export the liquors when made? Does the statute, in omitting to except from its operation the manufacture of intoxicating liquors within the limits of the State for export, constitute an unauthorized interference with the power given to Congress to regulate commerce?

These questions are well answered in the language of the court in the *License Tax Cases*, [24] 72 U. S. 5 Wall. 470 [18: 500]: "Over this commerce and trade [the internal commerce and domestic trade of the States] Congress has no power of regulation, nor any direct control. This power belongs exclusively to the States. No interference by Congress with the business of citizens transacted within a State is warranted by the Constitution, except such as is strictly incidental to the exercise of powers clearly granted to the Legislature. The power to authorize a business within a State is plainly repugnant to the exclusive power of the State over the same subject." The manufacture of intoxicating liquors in a State is none the less a business within that State because the manufacturer intends, at his convenience, to export such liquors to foreign countries or to other States.

This court has already decided that the fact that an article was manufactured for export to another State does not *of itself* make it an article of interstate commerce within the meaning of section 8, article 1, of the Constitution, and that the intent of the manufacturer does not determine the time when the article or product passes from the control of the State and belongs to commerce.

We refer to the case of *Coe* v. *Errol*, 116 U. S. 517 [29: 715]. In that case certain logs cut at a place in New Hampshire had been hauled to the Town of Errol on the Androscoggin River, in that State, for the purpose of transportation beyond the limits of that State to Lewiston, Maine; and were held at Errol for a convenient opportunity for such transportation. The selectmen of the town assessed on the logs state, county, town and school taxes; and the question before the court was whether these logs were liable to be taxed like other property in the State of New Hampshire. The court held them to be so liable. and said, *Mr. Justice* Bradley delivering the opinion:

"Do the owner's state of mind in relation to the goods, that is, his intent to export them, and his partial preparation to do so, exempt them from taxation? This is the precise question for solution . . . There must be a point of time when they cease to be governed exclusively by the domestic law and begin to be governed and protected by the national law of commercial regulation, and that moment seems to us to be a legitimate one for this purpose, in which they commence their final movement for transportation from the State of their origin to that of their destination. When the products of the farm or the forest are collected and brought in from the surrounding country to a town or station serving as an *entrepot* for that particular region, whether on a river or a line of railroad, such products are not yet exports, nor are they in process of exportation, nor is exportation begun until they are committed to the common carrier for transportation out of the State to the State of their destination, or have started on their ultimate passage to that State. Until then it is reasonable to regard them as not only within the State of their orig-

in, but as a part of the general mass of property of that State, subject to its jurisdiction, and liable to taxation there, if not taxed by reason of their being intended for exportation, but taxed without any discrimination, in the usual way and manner in which such property is taxed in the State . . . The point of time when state jurisdiction over the commodities of commerce begins and ends is not an easy matter to designate or define, and yet it is highly important, both to the shipper and to the State, that it should be clearly defined so as to avoid all ambiguity or question . . . But no definite rule has been adopted with regard to the point of time at which the taxing power of the State ceases as to goods exported to a foreign country or to another State. What we have already said, however, in relation to the products of a State intended for exportation to another State, will indicate the view which seems to us the sound one on that subject, namely, that such goods do not cease to be a part of the general mass of property in the State, subject, as such, to its jurisdiction, and to taxation in the usual way, until they have been shipped, or entered with a common carrier for transportation to another State, or have been started upon such transportation in a continuous route or journey . . . It is true, it was said in the case of *The Daniel Ball*, 77 U. S. 10 Wall. 557, 565 [19: 999, 1002]: 'Whenever a commodity has begun to move as an article of trade from one State to another, commerce in that commodity between the [26] States has commenced.' But this movement does not begin until the articles have been shipped or started for transportation from the one State to the other."

The application of the principles above announced to the case under consideration leads to a conclusion against the contention of the plaintiff in error. The police power of a State is as broad and plenary as its taxing power; and property within the State is subject to the operations of the former so long as it is within the regulating restrictions of the latter.

The judgment of the Supreme Court of Iowa is affirmed.

---

[96] NASHVILLE, CHATTANOOGA AND ST. LOUIS RAILWAY COMPANY, *Plff. in Err.*,

v.

STATE OF ALABAMA.

(See S. C. Reporter's ed. 96-102.)

State law forbidding persons afflicted with color blindness from serving on railroads, and requiring examination, constitutional—federal courts—fees—power of State.

1. The Statute of Alabama, declaring all persons afflicted with color blindness disqualified from serving on railroad lines within the State in certain capacities, and providing for an examination and imposing a fine for any railroad company to employ a person in any of such capacities who has not a certificate of fitness from the examiners, is not repugnant to the power vested in Congress to regulate commerce among the States, and does not violate the clause of the Fifth Amendment which declares that no person shall be deprived of his property without due process of law.

2. Such statute is not in conflict with article 3 of the Constitution, which provides that the trial of all crimes shall be held in the State where they were committed.

3. That provision in said article 3 of the Constitution has reference only to trials in federal courts; it has no application to trials in the state courts.

4. Requiring railroad companies to pay the fees allowed for the examination of parties who are to serve on the railroad in one of the capacities mentioned is not depriving them of property without due process of law.

5. Until legislation by Congress is had, as to the qualifications, duties and liabilites of employés on railway trains engaged in interstate commerce, it is within the power of the State to provide against accident on trains while within their limits.

[No. 990.]

Argued Oct. 11, 1888. Decided Oct. 22, 1888.

IN ERROR to the Supreme Court of the State of Alabama, to review a judgment of the Supreme Court of that State affirming a conviction of plaintiff in error in the Circuit Court of the State, for a violation of a statute of the State as to the qualifications of railroad employés. *Affirmed.*

The facts are stated in the opinion.

Mr. **Oscar R. Hundley,** for plaintiff in error:

The Act in question is repugnant to article 1, § 8, subd. 3, of the Constitution of the United States, which provides that "Congress shall have power to regulate commerce among the several States."

Smith v. *Ala.* 124 U. S. 465 (31:508); *Western Union Tel. Co.* v. *Pendleton*, 122 U. S. 359 (30:1190); *Mobile Co.* v. *Kimball*, 102 U. S. 691 (26:238); *Fargo* v. *Mich.* 121 U. S. 231 (30:890); *Gloucester Ferry Co.* v. *Pa.*, and *Brown* v. *Houston*, 114 U. S. 196, 622 (29:158, 257); *Pickard* v. *Pullman Southern Car Co.* 117 U. S. 34 (29:785); *Wabash, St. L. & P. R.* v. *Ill.* 118 U. S. 557 (30:244); *Walling* v. *Mich.* 116 U. S. 446 (29:691); *Corson* v. *Md.* 120 U. S. 502 (30: 699); *Case of State Freight Tax*, 82 U. S. 15 Wall. 232 (21:146); *Hannibal & St. Jo. R. Co.* v. *Husen*, and *Hall* v. *DeCuir*, 95 U. S. 465, 485, 497 (24:527, 547, 551).

The Act is repugnant to article 3, § 2, subd. 3, which provides that "The trial of all crimes shall be held in the State where the said crimes shall have been committed."

Graham v. *Monsergh*, 22 Vt. 543; *Richardson* v. *Burlington*, 33 N. J. Law, 190; *Slack* v. *Gibbs*, 14 Vt. 357; *Nashville etc. R. Co.* v. *Eakin*, 6 Coldw. 582; *Crowley* v. *Panama R.* 30 Barb. 99; *Leonard* v. *Columbia Steam Nav. Co.* 84 N. Y. 48.

The Act is repugnant to the Fifth Amendment to the Constitution of the United States, which provides, that "No person shall be deprived of life, liberty or property, without due process of law."

Baldwin v. *Kouns*, 81 Ala. 272; *Zeigler* v. *South & North Ala. R. Co.* 58 Ala. 599; *Wilburn* v. *McCalley*, 63 Ala. 443; *Westervelt* v. *Gregg*, 12 N. Y. 202, 209; *State* v. *Staten*, 6 Coldw. 233; *McMillen* v. *Anderson, Pearson* v. *Yewdall*, and *Pennoyer* v. *Neff*, 95 U. S. 87, 294, 714 (24:335, 436, 565); *Davidson* v. *N. O* 96 U. S. 97 (24:616); *State R. Tax Cases*, 92 U. S. 609 (23:672).

Mr. **T. N. McClellan,** *Atty-Gen. of Alabama*, for defendant in error:

Questions relating to the interpretation of a state enactment are of a final state arbitrament.

Cooley, Const. Lim. 18 n.; *Elmendorf* v. *Tay*

der, 23 U. S. 10 Wheat. 152 (6:289); *Green* v. *Neal*, 31 U. S. 6 Pet. 291 (8:402); *Burgess* v. *Seligman*, 107 U. S. 20 (27:359); *McCutchen* v. *Marshall*, 33 U. S. 8 Pet. 220 (8:923).

It is competent for a State to require the examination and certification by its officers, of railroad operatives, as to fitness, in those respects which involve public safety; and it may require the railroad companies to pay the expenses of all acts and proceedings necessary to that end.

Morgan's La. & Tex. R. & S. Co. v. *La.* 118 U. S. 455 (30:237); *Blair* v. *Milwaukee & P. R. Co.* 20 Wis. 202; *New Albany & S. R. Co.* v. *Tilton*, 12 Ind. 3; *Jones* v. *Galena & C. R. Co.* 16 Iowa, 6; *Ohio & M. R. Co.* v. *McClelland*, 25 Ill. 140; *Waldron* v. *Rensselaer & S. R. Co.* 8 Barb. 390; *Kansas Pacific R. Co.* v. *Mower*, 16 Kan. 573; *Gorman* v. *Pac. R. Co.* 26 Mo. 441; *Thorpe* v. *Rutland & B. R. Co.* 27 Vt. 140; *People* v. *Squire*, 10 Cent. Rep. 437, 107 N. Y. 593.

[97] *Mr. Justice* **Field** delivered the opinion of the court:

A Statute of Alabama which took effect on the first of June, 1887, "for the protection of the traveling public against accidents caused by color blindness and defective vision," declares that all persons afflicted with color blindness and loss of visual power to the extent therein defined are "disqualified from serving on railroad lines within the State in the capacity of locomotive engineer, fireman, train conductor, brakeman, station agent, switchman, flagman, gate tender, or signal man, or in any other position which requires the use or discrimination of form or color signals," and makes it a misdemeanor, punishable by fine of not less than ten nor more than fifty dollars for each offense, for a person to serve in any of the capacities mentioned without having obtained a certificate of fitness for his position in accordance with the provisions of the Act. It provides for the appointment by the Governor of a suitable number of qualified medical men throughout the State to carry the law into effect and for the examination by them of persons to be employed in any of the capacities mentioned; prescribes rules to govern the action of the examiners, and allows them a fee of three dollars for the examination of each person. It declares that re-examinations shall be made once in every five years, and whenever sickness or fever or accidents calculated to affect the visual organs have occurred to the parties, or a majority of the board may direct; that the examinations and re-examinations shall be made at the expense of the railroad companies; and that it shall be a misdemeanor, punishable by a fine, of not less than fifty nor more than five hundred dollars for each offense, for any such company to employ a person in any of the capacities mentioned, who does not possess a certificate of fitness therefor from the examiners in so far as color blindness and the visual organs are concerned.

The defendant, the Nashville, Chattanooga & St. Louis Railway Company, is a corporation [98] created under the laws of Tennessee, and runs its trains from Nashville in that State to various points in other States, twenty-four miles of its line being in Alabama, two miles in Georgia, seven in Kentucky, and 464 in Tennessee.

On the second of August, 1887, one James Moore was employed by the Company as a train conductor on its road, and acted in that capacity, in the County of Jackson, in Alabama, without having obtained a certificate of his fitness so far as color blindness and visual powers were concerned, in accordance with the law of that State. For this employment the Company was indicted in the Circuit Court of the State for Jackson County, under the statute mentioned, and on its plea of not guilty was convicted, and fined fifty dollars. On appeal to the supreme court of the State the judgment was affirmed, and to review it the case is brought on error to this court.

It was contended in the court below, among other things, that the Statute of Alabama was repugnant to the power vested in Congress to regulate commerce among the States, and that it violated the caluse of the Fifth Amendment which declares that no person shall be deprived of his property without due process of law. The same positions are urged in this court, with the further position that the statute is in conflict with the clause in the third article of the Constitution, which provides that the trials of all crimes shall be held in the State where they were committed.

The first question thus presented is covered by the decision of this court rendered at the last term in *Smith* v. *Alabama*, 124 U. S. 465 [31: 508]. In that case the law, adjudged to be valid, required as a condition for a person to act as an engineer of a railroad train in that State, that he should be examined as to his qualifications by a board appointed for that purpose, and licensed if satisfied as to his qualifications, and made it a misdemeanor for anyone to act as engineer who violated its provisions. The Act now under consideration only requires an examination and license of parties to be employed on railroads in certain specified capacities, with reference to one particular qualification, that relating to his visual organs; but this [99] limitation does not affect the application of the decision. If the State could lawfully require an examination as to the general fitness of a person to be employed on a railway, it could of course lawfully require an examination as to his fitness in some one particular. Color blindness is a defect of a vital character in railway employés in the various capacities mentioned. Ready and accurate perception by them of colors, and discrimination between them, are essential to safety of the trains, and of course of the passengers and property they carry. It is generally by signals of different colors, to each of which a separate and distinct meaning is attached, that the movement of trains is directed. Their starting, their stopping, their speed, the condition of switches, the approach of other trains, and the tracks in such case which each should take, are governed by them. Defects of vision in such cases on the part of anyone employed may lead to fatal results. Color blindness, by which is meant either an imperfect perception of colors, or an inability to recognize them at all, or to distinguish between colors, or between some of them, is a defect much more common than is generally supposed. Medical treatises of recognized merit on the subject represent as the result of extended examinations that a fraction over 4 per cent of males are color

blind. With some the defect is congenital, with others brought on by occupations in which they have been engaged, or by vicious habits in the use of liquors or food in which they have indulged. It presents itself in a great variety of forms, from an imperfect perception of colors to absolute inability to recognize them at all.

Such being the proportion of males thus affected, it is a matter of the greatest importance to safe railroad transportation of persons and property that strict examination be made as to the existence of this defect in persons seeking employment on railroads in any of the capacities mentioned.

It is conceded that the power of Congress to regulate interstate commerce is plenary; that, as incident to it, Congress may legislate as to the qualifications, duties and liabilities of employés and others on railway trains engaged in that commerce; and that such legislation will [100] supersede any state action on the subject. But until such legislation is had, it is clearly within the competency of the States to provide against accidents on trains whilst within their limits. Indeed, it is a principle fully recognized by decisions of state and federal courts, that wherever there is any business in which, either from the products created or the instrumentalities used, there is danger to life or property, it is not only within the power of the States, but it is among their plain duties, to make provision against accidents likely to follow in such business, so that the dangers attending it may be guarded against so far as is practicable.

In *Smith* v. *Alabama* this court, recognizing previous decisions where it had been held that it was competent for the State to provide redress for wrongs done and injuries committed on its citizens by parties engaged in the business of interstate commerce, notwithstanding the power of Congress over those subjects, very pertinently inquired: "What is there to forbid the State, in the further exercise of the same jurisdiction, to prescribe the precautions and safeguards foreseen to be necessary and proper to prevent by anticipation those wrongs and injuries which, after they have been inflicted, it is admitted the State has power to redress and punish? If the State has power to secure to passengers conveyed by common carriers in their vehicles of transportation a right of action for the recovery of damages occasioned by the negligence of the carrier in not providing safe and suitable vehicles, or employés of sufficient skill and knowledge, or in not properly conducting and managing the act of transportation, why may not the State also impose, on behalf of the public, as additional means of prevention, penalties for the nonobservance of these precautions? Why may it not define and declare what particular things shall be done and observed by such a carrier in order to insure the safety of the persons and things he carries, or of the persons and property of others liable to be affected by them?" Of course but one answer can be made to these inquiries, for clearly what the State may punish or afford redress for, when done, it may seek by proper precautions in advance to prevent. And the court in that [101] case held that the provisions in the Statute of Alabama were not strictly regulations of interstate commerce, but parts of that body of the local law which governs the relation between carriers of passengers and merchandise and the public who employ them, which are not displaced until they come in conflict with an express enactment of Congress in the exercise of its power over commerce, and that until so displaced they remain as the law governing carriers in the discharge of their obligations, whether engaged in purely internal commerce of the State, or in commerce among the States. The same observations may be made with respect to the provisions of the state law for the examination of parties to be employed on railways with respect to their powers of vision. Such legislation is not directed against commerce, and only affects it incidentally, and therefore cannot be called, within the meaning of the Constitution, a regulation of commerce. As said in *Sherlock* v. *Alling*, 93 U. S. 99, 104 [23:819], legislation by a State of that character, "relating to the rights, duties and liabilities of citizens, and only indirectly and remotely affecting the operations of commerce, is of obligatory force upon citizens within its territorial jurisdiction, whether on land or water, or engaged in commerce, foreign or interstate, or in any other pursuit." In our judgment the Statute of Alabama under consideration falls within this class.

The second position of the plaintiff in error, that the state statute is repugnant to the provision of article 3 of the Constitution, which declares that the trial of all crimes shall be held in the State where they have been committed, is readily disposed of. The provision has reference only to trials in the federal courts; it has no application to trials in the state courts.

As to the third position of the plaintiff in error, assuming that counsel intended to rely upon the Fourteenth instead of the Fifth Amendment (as the latter only applies a limit to federal authority, not restricting the powers of the State), we do not think it tenable. *Barron* v. *Balt.*, and *Livingston* v. *Moore*, 32 U. S. 7 Pet. 243, 469 [8:672,751]. Requiring railroad companies to pay the fees allowed for the examination of parties who are to serve on their rail- [102] roads in one of the capacities mentioned is not depriving them of property without due process of law. It is merely imposing upon them the expenses necessary to ascertain whether their employés possess the physical qualifications required by law.

Judgment affirmed.

UNITED STATES, *ex rel.* OSCAR DUNLAP, [40]
Plff. in Err.,
v.
JOHN C. BLACK, Comr. of Pensions.

UNITED STATES, *ex rel.* FRANK ROSE,
Plff. in Err., *v.* SAME.

UNITED STATES, *ex rel.* CHARLES R. MILLER, *Plff. in Err.*, *v.* SAME.

(See S. C. Reporter's ed., 40-52.)

Mandamus, *when denied—ministerial duty—legal decision—denial of pensions.*

1. This court will not interfere by *mandamus* with the executive officers of the Government in

the exercise of their ordinary official duties, even where those duties require an interpretation of the law.

2. But when they refuse to act in a case at all, or when, by special statute or otherwise, a mere ministerial duty is imposed upon them, that is, a service which they are bound to perform without further question, then, if they refuse, a *mandamus* may be issued to compel them.

3. Where the Commissioner of Pensions did not refuse to act or decide, but adopted an interpretation of the law adverse to the relator by refusing a pension certificate, and his decision was confirmed by the Secretary of the Interior, this court has no right to review his decision.

4. If the Commissioner of Pensions refuses to carry out the decision of the Secretary of the Interior, his superior officer, he may be required to show cause why a *mandamus* should not issue, for the reason that, so far as respects the matter decided, there is no discretion or exercise of judgment left.

[Nos. 991, 992, 993.]

Argued Oct. 12, 1888. Decided Oct. 22, 1888.

IN ERROR to the Supreme Court of the District of Columbia, to review judgments refusing a *mandamus*. *Affirmed* in 991 and 992; *reversed* in 993.

The facts are stated in the opinion.

Mr. **J. G. Bigelow,** for plaintiff in error.

Mr. **Wm. A. Maury,** *Assist. Atty-Gen.*, for defendant in error.

[41] *Mr. Justice* **Bradley** delivered the opinion of the court:

These cases were argued together, but it will be convenient to consider them separately, in the order in which they stand on the docket.

No. 991 was an application by Oscar Dunlap, the relator, to the Supreme Court of the District of Columbia for a writ of *mandamus* to be directed to the respondent, Black, as Commissioner of Pensions, commanding him to reissue to the relator his pension certificate for $25 per month from June 6, 1866; $31.25 per month from June 4, 1872; $50 per month from June 4, 1874; and $72 per month from June 17, 1878, first deducting all sums paid relator under previous pensions.

By the Act of March 3, 1873 (Rev. Stat. § 4698), it was provided that a pension of $31.25 per month should be allowed to all persons who, while in the military or naval service, had lost their sight, or both hands or both [42] feet, or had been permanently and totally disabled, so as to require the regular aid and attendance of another person; and a pension of $24 per month to those who had lost one hand and one foot, and $18 per month to those who had lost either one hand or one foot; and other less pensions for lesser injuries, any increase of pension to commence from the date of the examining surgeon's certificate. By the Act of June 18, 1874 (Supp. Rev. Stat. p. 39), it was provided that, in cases of blindness or loss of both hands or both feet, or total helplessness, requiring the regular and personal aid of another person, the pension should be increased from $31.25 to $50 per month. By the Act of February 28, 1877 (Supp. Rev. Stat. 282), it was provided that those who had lost one hand and one foot should be entitled to a pension for each of such disabilities at the rate of existing laws,—which made the total pension $36 per month. The relator, in April, 1877, applied for the benefit of this law and it was granted to him. By the Act of June 16, 1880 (Supp. Rev. Stat. 560), it was enacted that all those then (at the date of the Act) receiving a pension of $50 per month under the Act of June 18, 1874, should receive $72 per month from June 17, 1878.

After the last Act was passed, the relator applied for the increase allowed by it. The Commissioner of Pensions, being of opinion that he did not come within its terms, rejected the application, but granted him a certificate for a pension of $50 per month under the Act of 1874, to be received from May 25, 1881, the date of his medical examination. The petition for *mandamus* sets out the decision of the Commissioner in full, in which it is conceded that the relator has become permanently disabled. The following is an extract from the decision, to wit:

"WASHINGTON, D. C., *October* 15, 1887.

"In this case the application of the claimant for rerating and for increase will be allowed at $50 per month from May 25, 1881, the date of the first medical examination under the claimant's application of June 26, 1880. This rating is allowed under the Act of June 18, 1874, it sufficiently appearing by the evidence in this [43] case that the claimant has lost both a hand and a foot, and at the same time has been so additionally injured in the head as, from a period prior to the rerating or increase in this case, to render him totally and permanently helpless, requiring from thence until now the regular personal aid and attendance of another person. The reason why the claimant's rating is not advanced to $72 per month is that he was not, on the 16th of June, 1880 [the date of the Act], receiving pension at the rate of $50 per month, nor was he entitled to receive a pension of $50 per month at that date, for the reason that, while the degree of helplessness which has been shown was that contemplated by the law, the claimant himself (neither on his own motion nor under the guidance of those who are legally responsible for his actions in this claim) had not made application to be rated in pursuance of the Act of June 18, 1874, but, on the contrary thereof, had asked to be rated and had been rated at $36 per month, under the Act of February 28, 1877." The decision proceeds to discuss further the reasons for the conclusion to which the Commissioner had come.

The relator, by his counsel, strenuously contends that the concession made by the Commissioner with regard to the disability of the relator shows that it was his clear duty to have granted a certificate for the larger pension of $72 per month. The following passage in the petition for *mandamus* shows the position taken by the relator:

"And your relator further says that the respondent has thus expressly found the facts in your relator's case to be: (1) that while your relator was in the military service . . . he sustained such wounds and injuries as resulted in the loss of his right hand and right foot, and at the same time sustaining injury to the head; (2) that your relator was thereby rendered 'totally and permanently helpless, requiring from thence till now the regular aid and attendance of another person;' and (3) that your relator applied to the Commissioner of Pensions on June 26, 1880, for pension on account thereof. And your relator says that upon this

finding of the facts whether he is entitled to a rerating and an increase of pension from date of discharge, so as to give unto him a pension commensurate with his disabilities so found to exist by the respondent, is a question of law, and that it does not lie in the discretionary power of the respondent, as Commissioner of Pensions, to deny or in any wise abridge his rights with respect thereto."

[44]

This extract shows the theory of the petitioner and the doctrine which he invokes in support of his application. We have been more full in stating the facts of the case in order that the legal grounds on which that application is based may clearly appear. The case does not require an extended discussion. The questions of law on which it depends have been closed by repeated decisions of this court.

The amenability of an executive officer to the writ of *mandamus* to compel him to perform a duty required of him by law was discussed by *Chief Justice* Marshall in his great opinion in the case of *Marbury* v. *Madison*, 5 U. S. 1 Cranch, 137 [2:60]; and the radical distinction was there pointed out between acts performed by such officers in the exercise of their executive functions, which the Chief Justice calls political acts, and those of a mere ministerial character; and the rule was distinctly laid down that the writ will not be issued in the former class of cases, but will be issued in the latter. In that case, President Adams had nominated, and the Senate had confirmed, Marbury as a Justice of the Peace of the District of Columbia; and a commission in due form was signed by the President appointing him such justice, and the seal of the United States was duly affixed thereto by the Secretary of State but the commission had not been handed to Marbury when the offices of the Government were transferred to the administration of President Jefferson. Mr. Madison, the new Secretary of State, refused to deliver the commission, and a *mandamus* was applied for to this court to compel him to do so. The court held that the appointment had been made and completed, and that Marbury was entitled to his commission and that the delivery of it to him was a mere ministerial act, which involved no further official discretion on the part of the Secretary, and could be enforced by *mandamus*. But the court did not issue the writ, because it would have been an exercise of original jurisdiction which it did not possess. Whilst this opinion will always be read by the student with interest and profit, it has not been considered as invested with absolute judicial authority except on the question of the original jurisdiction of this court. The decision on this point has made it necessary for parties desiring to compel an officer of the Government to perform an act, in which they are interested, to resort to the highest court of the District of Columbia for redress. It has been held in numerous cases, and was held, after special discussion, in the cases of *Kendall* v. *United States*, 37 U. S. 12 Pet. 524 [9:1181]; and *United States* v. *Schurz*, 102 U. S. 378 [26:167], that the former Circuit Court of the District, and the present Supreme Court of the District, respectively, were invested with plenary jurisdiction on the subject. On this point there is no further question.

[45]

The two leading cases which authoritatively show when the Supreme Court of the District may, and when it may not, grant a *mandamus* against an executive officer, are the above cited case of *Kendall* v. *United States, on the relation of Stokes*, and *Decatur* v. *Paulding*, 39 U. S. 14 Pet. 497 [10:559]. The subsequent cases have followed the principles laid down in these, and do little more than illustrate and apply them. In the former case the *mandamus* was granted, and the decision was affirmed by this court. The case was, shortly, this: Stockton & Stokes, as contractors for carrying the mails, had certain claims against the Government for extra services, which they insisted should be credited in their accounts, and a controversy arose between them and the Post Office Department on the subject. Congress passed an Act for their relief, by which the Solicitor of the Treasury was authorized and directed to settle and adjust their claims, and make them such allowances as upon a full examination of all the evidence might seem to be equitable and right; and the Postmaster-General was directed to credit them with whatever sums the Solicitor should decide to be due them. The Solicitor, after due investigation, made his report, and stated the sums due to Stockton & Stokes on the claims made by them; but the Postmaster-General, Mr. Kendall, refused to give them credit as directed by the law. This the court held he could be compelled to do by *mandamus*, because it was simply a ministerial duty to be performed, and not an official act requiring any exercise of judgment or discretion. This court, through *Mr. Justice* Thompson, said: "The act required by the law to be done by the Postmaster-General is simply to credit the relators with the full amount of the award of the Solicitor. This is a precise, definite Act, purely ministerial; and about which the Postmaster-General had no discretion whatever. The law upon its face shows the existence of accounts between the relators and the Post Office Department. No money was required to be paid; and none could be drawn from the Treasury without further legislative provision, if this credit should overbalance the debit standing against the relators. But this was a matter with which the Postmaster-General had no concern. He was not called upon to furnish the means of paying such balance, if any should be found. He was simply required to give the credit. This was not an official act in any other sense than being a transaction in the department where the books and accounts were kept; and was an official act in the same sense that an entry in the minutes of a court, pursuant to an order of the court, is an official act. There is no room for the exercise of any discretion, official or otherwise; all that is shut out by the direct and positive command of the law, and the act required to be done is, in every just sense, a mere ministerial act."

[46]

In the other case, *Decatur* v. *Paulding*, the *mandamus* was refused by the circuit court, and that decision was also affirmed by this court. The case was this: on the 3d of March, 1837, Congress passed an Act giving to the widow of any officer who had died in the naval service a pension equal to half of his monthly pay from the time of his death until her death or marriage. On the same day Congress

passed a resolution granting a pension to Mrs. Decatur, widow of Stephen Decatur, for five years commencing June 30, 1834, and the arrearages of the half pay of a post captain from Commodore Decatur's death to the 30th of June, 1834. Mrs. Decatur applied for and received her pension under the general law, with a reservation of her rights under the resolution, claiming the pension granted by that also. [47] The Secretary of the Navy, acting under the opinion of the Attorney-General, decided that she could not have both. Thereupon she applied for a *mandamus* to compel the Secretary to comply with the resolution in her favor. *Chief Justice* Taney delivered the opinion of the court, and laid down the law in terms that have never been departed from. We can only quote a single passage from this opinion. The Chief Justice says: "The duty required by the resolution was to be performed by him [the Secretary of the Navy] as the head of one of the executive departments of the Government, in the ordinary discharge of his official duties. In general, such duties, whether imposed by Act of Congress or by resolution, are not mere ministerial duties. The head of an executive department of the Government, in the administration of the various and important concerns of his office, is continually required to exercise judgment and discretion. He must exercise his judgment in expounding the laws and resolutions of Congress, under which he is from time to time required to act. If he doubts he has a right to call on the Attorney-General to assist him with his counsel; and it would be difficult to imagine why a legal adviser was provided by law for the heads of the departments, as well as for the President, unless their duties were regarded as executive, in which judgment and discretion were to be exercised.

"If a suit should come before this court, which involved the construction of any of these laws, the court certainly would not be bound to adopt the construction given by the head of a department. And if they supposed his decision to be wrong, they would, of course, so pronounce their judgment. But their judgment upon the construction of a law must be given in a case in which they have jurisdiction, and in which it is their duty to interpret the Act of Congress, in order to ascertain the rights of the parties in the cause before them. The court could not entertain an appeal from the decision of one of the Secretaries, nor revise his judgment in any case where the law authorized him to exercise discretion or judgment. Nor can it by *mandamus* act directly upon the officer, and guide and control his judgment or discretion in the matters committed to his care, in the ordinary discharge of [48] his official duties. The case before us illustrates these principles and shows the difference between executive and ministerial acts." The Chief Justice then goes on to show that the decision of the Secretary of the Navy in that case was entirely executive and official in its character, and that, in this respect, the case differed entirely from that of *Kendall* v. *Stokes*.

The principle of law deducible from these two cases is not difficult to enounce. The court will not interfere by *mandamus* with the executive officers of the Government in the exercise of their ordinary official duties, even where those duties require an interpretation of the law, the court having no appellate power for that purpose; but when they refuse to act in a case at all, or when, by special statute, or otherwise, a mere ministerial duty is imposed upon them, that is, a service which they are bound to perform without further question, then, if they refuse, a *mandamus* may be issued to compel them.

Judged by this rule the present case presents no difficulty. The Commissioner of Pensions did not refuse to act or decide. He did act and decide. He adopted an interpretation of the law adverse to the relator, and his decision was confirmed by the Secretary of the Interior, as evidenced by his signature of the certificate. Whether if the law were properly before us for consideration, we should be of the same opinion, or of a different opinion, is of no consequence in the decision of this case. We have no appellate power over the Commissioner, and no right to review his decision. That decision and his action taken thereon were made and done in the exercise of his official functions. They were by no means merely ministerial acts.

The decisions of this court, which have been rendered since the cases referred to, corroborate and confirm all that has been said. The following are the most important, to wit: *Brashear* v. *Mason*, 47 U. S. 6 How. 92 [12: 357]; *United States* v. *Guthrie*, 58 U. S. 17 How. 284 [15: 102]; *Commissioner of Patents* v. *Whitely*, 71 U. S. 4 Wall. 522 [18: 335]; *Georgia* v. *Stanton*, 73 U. S. 6 Wall. 50 [18: 721]; *Gaines* v. *Thompson*, 74 U. S. 7 Wall. 347 [19: 62]; *U. S. ex rel. McBride* v. *Schurz*, 102 U. S. 378 [26: 167]; *Butterworth* v. *Hoe*, 112 U. S. 50 [28: 656].

In the two last cases cited, the *mandamus* [49] was granted; and they were cases in which it was held that a mere ministerial duty was to be performed by the officer. In *U. S. ex rel. McBride* v. *Schurz*, the question related to a patent for land claimed by a preemptor. All the proceedings had been gone through, the right of the applicant had been affirmed, the patent had been made out in the Land Office, signed by the President, sealed with the Land Office seal, countersigned by the recorder of the Land Office, recorded in the proper book, and transmitted to the local land officers for delivery; but delivery was refused because instructions had been received from the Commissioner to return the patent. The plea was that it had been discovered that the lands belonged to a town site. The court held that this was an insufficient plea; that the title had passed to the applicant, and he was entitled to his patent, subject to any equity which other parties might have to the land, or to a proceeding for setting the patent aside; and that the duty of the Commissioner, or Secretary of the Interior, had become a mere ministerial duty to deliver the instrument—as was held in *Marbury* v. *Madison*, in relation to the commission of Marbury as justice of the peace. Of course this case is entirely different from the case now under consideration.

The case of *Butterworth* v. *Hoe* was very similar in principle to that of *United States* v. *Schurz*. The Commissioner of Patents had

decided in favor of the right of one Gill, an applicant for a patent in a case of interference, and adjudged that a patent should issue to his assigns accordingly. An appeal was taken to the Secretary of the Interior, who reversed the decision of the Comissioner. The latter thereupon, and for that reason, refused to issue a patent. It was a question whether an appeal lay to the Secretary of the Interior, and this court held that it did not, and that he had no jurisdiction in the matter. The court, therefore, held that the patent ought to be issued in accordance with the decision of the Commissioner, and that the mere issue of the patent was a ministerial matter for which a *mandamus* would lie. This case, like that of *United States* v. *Schurz*, is unlike the present. All [50] deliberation had ceased; the right of Gill, the applicant, was adjudged; there was nothing to be done but to deliver to the party the documentary evidence of his title. That was a mere ministerial matter.

We think that the mandamus *was properly refused, and the judgment of the Supreme Court of the District is affirmed.*

[No. 992.]

This case is similar in all essential respects to the preceding, and the decision must be the same.

Judgment affirmed.

[No. 993.]

This case differs materially from numbers 991 and 992. Charles R. Miller, the relator, having made an unsuccessful application to the Commissioner of Pensions for an increase of his pension, finally appealed to the Secretary of the Interior, and in his petition for *mandamus* says as follows, to wit:

"That the Secretary, upon a personal, careful inspection of the record and all the evidence filed therein in his case, and on due consideration thereof, made and rendered the following official decision:

'DEPARTMENT OF THE INTERIOR,
'Washington, D. C., February 12, 1885.

'The Commissioner of Pensions:

'Sir: Herewith are returned the papers in the pension claim, certificate No. 55356 of Charles R. Miller.

'It appears from the papers that Mr. Miller's claim was before this Department on the 6th instant, and it was held that the pensioner is greatly disabled, and it is evident from the papers in his case that he is utterly unable to do any manual labor, and he is therefore en- [51] titled to $30 per month under the Act of March 3, 1883, which has been allowed him by your office.

'Since the departmental decision above referred to, the papers in the claim have been carefully reconsidered by the Department, and a personal examination of the pensioner made, and it satisfactorily appears that he is unable to put on his shoe and stocking on the foot of his injured leg, for the reason that the nearest point that can be reached by hand from foot is twenty-three inches, and for the further reason that from "*necrosis* of the lower vertebræ of spine, producing *anchylosis* of the spinal column and destruction of some of the spinal nerves," he is unable to bend his back.

'After a careful review of all the facts in this case, the Department is constrained to think that the pensioner comes under the meaning of the laws granting pensions to those persons who require aid and attendance. The decision of the 6th instant, is therefore overruled.

'Very Respectfully,
'H. M. TELLER, *Secretary.*'

"And your orator avers that the said official decision of the Secretary of the Interior, so made as aforesaid, was a final adjudication of his claim in his favor, and conclusively establishes his right under the laws to be rerated at $25 per month from June 6, 1866; $31.25 per month from June 4, 1872; $50 per month from June 4, 1874; and $72 per month from June 17, 1878, and to be paid the difference monthly between these sums and what has been allowed him; and all that remained for the Commissioner of Pensions to do in the premises was the simple ministerial duty of accordingly carrying the said final official decision of the Secretary into execution."

The petition goes on to state that the former Commissioner of Pensions refused to carry out the Secretary's decision to its full extent, and that the present Commissioner, the respondent, still refuses. If, as the petition suggests, the Commissioner of Pensions refuses to carry out the decision of his superior officer, there would seem to be *prima facie* ground for at least calling upon him to show cause why a *mandamus* should not issue. This was all that the peti- [52] tioner asked and this the court refused. As a general rule, when a superior tribunal has rendered a decision binding on an inferior, it becomes the ministerial duty of the latter to obey it and carry it out. So far as respects the matter decided, there is no discretion or exercise of judgment left. This is the constant course in courts of justice. The appellate court will not hesitate to issue a *mandamus* to compel obedience to its decisions.

The appellate tribunal in the present case is the Secretary of the Interior, who has no power to enforce his decisions by *mandamus*, or any process of like nature; and therefore a resort to a judicial tribunal would seem to be necessary, in order to afford a remedy to the party injured by the refusal of the Commissioner to carry out his decision. But it is suggested that removal of the contumacious subordinate from office, or a civil suit brought against him for damages, would be effectual remedies. We do not concur in this view. A suit for damages, if it could be maintained, would be an uncertain, tedious and ineffective remedy, attended with many contingencies and burdened with onerous expenses. Removal from office would be still more unsatisfactory. It would depend on the arbitrary discretion of the President, or other appointing power, and is not such a remedy as a citizen of the United States is entitled to demand. We think that the case suggested by the petition is one in which it would be proper for the court to interfere by *mandamus*. Whether it will turn out to be such when all the circumstances are known, can be ascertained by a rule to show cause; and such a rule, we think, ought to

have been granted. *The judgment of the court below is, therefore, reversed and the cause remanded, with instructions to grant a rule to show cause as applied for by the petitioner.*

Judgments will be entered separately in the several cases.

---

[102] THE COUNTY OF LIVINGSTON, IN THE STATE OF MISSOURI, *Plff. in Err.*,

v.

THE FIRST NATIONAL BANK OF PORTSMOUTH, NEW HAMPSHIRE.

(See S. C. Reporter's ed. 102-128.)

County bonds, validity of—consolidated company—order of court—estoppel.

1. Under the Missouri Act to authorize the consolidation of railroad companies in that State with companies owning connecting railroads in adjoining States, the consolidated company is entitled to the same privileges under the laws of Missouri that the Missouri corporation was entitled to under the laws of that State at the time the consolidation took place, including the privilege of a subscription to stock.

2. Where, when the consolidation took place, there was a perfected power in a township to subscribe to the stock of the Missouri company, and there was also an existing privilege to the company to receive the subscription, that privilege passes by the consolidation to the consolidated company; and the issuing of the bonds to the consolidated company was lawful.

3. The statute and the vote of the electors, taken together, authorize the subscription and the issue of the bonds; and no formal order by the county court to do those acts was necessary.

4. The fact of the issue of the bonds by the county court, under its seal, with the recitals contained in the bonds, and the other facts of this case, estop the county from urging, as against a *bona fide* holder of the bonds and coupons, the existence of any mere irregularity in the making of the subscription or the issuing of the bonds.

[No. 195.]

Submitted Oct. 9, 1888. Decided Oct. 29, 1888.

IN ERROR to the Circuit Court of the United States for the Western District of Missouri, to review a judgment against the County of Livingston, upon its bonds. *Affirmed.*

The facts are stated in the opinion.

Messrs. Jas. L. Davis and **Henry N. Ess**, for plaintiff in error.

Mr. **G. S. Eldredge**, for defendant in error:

Mr. Justice **Blatchford** delivered the opinion of the court:

[103] This is a suit commenced on the 4th of September, 1882, by the First National Bank of Portsmouth, New Hampshire, against the County of Livingston, in the State of Missouri, to recover the amount of 312 coupons, for $20 each, being thirteen coupons, due from July 1, 1876, to July 1, 1882, both inclusive, on each one of twenty-four bonds for $500 each, each of the bonds, except as to number, being in the following form:

"*Fifteen-Year Bond.*

"COUNTY OF LIVINGSTON, *State of Missouri:*

"Livingston County bond issued in behalf of the municipal Township of Chillicothe. Interest eight per cent per annum, payable on the first days of January and July. Fifteen years. No. 18.

"Know all men by these presents, that the County of Livingston, in the State of Missouri, acknowledges itself indebted and firmly bound to the St. Louis, Council Bluffs & Omaha Railroad Company in the sum of five hundred dollars ($500), which sum the said County hereby promises to pay to the said St. Louis, Council Bluffs & Omaha Railroad Company, or bearer, at the National Bank of Commerce, in the City of New York, State of New York, on the first day of July, 1885, together with interest thereon from the first day of July, 1870, at the rate of eight (8) per cent per annum, which interest shall be payable semi-annually on the first days of January and July, of each year, on the presentation or delivery at said bank of the coupons of interest hereto attached. This bond being issued under and pursuant to an order of the County Court of Livingston County, authorized by a two thirds vote of the people of Chillicothe municipal township.

"In testimony whereof the said County of Livingston has executed this bond by the presiding justice of the county court of said County, under an order of said [L. S.] court, signing his name hereto, and by the clerk of said court, under the order thereof, attesting the same and affixing thereto the seal of said court.

"This done at the City of Chillicothe, County of Livingston aforesaid, this 10th day of April, A. D. 1871. [104]

G. W. McDOWELL,
"*Presiding Justice of the County Court of*
"*Livingston County, State of Missouri.*

"Attest:

"[Seal of the County Court of Livingston County.]

"W. H. GAUNT,
"*Clerk of the County Court of*
"*Livingston County, State of Missouri.*"

Attached to each of the bonds were coupons for the interest, each, except as to number and date when due, being in the following form:

"CHILLICOTHE, LIVINGSTON COUNTY, MO.,
"$20. *January*, 1, 1871.

"The County of Livingston acknowledges to owe the sum of twenty dollars on the first day of July, 1871, being interest on bond number one for five hundred dollars. This coupon payable at the National Bank of Commerce in the City of New York, State of New York.

"W. H. GAUNT,
"*Clerk of the County Court of*
"*Livingston County, State of Missouri.*"

Successive coupons for each instalment of interest were attached to each bond.

The petition by which this suit was commenced alleged that the defendant made and delivered the bonds in behalf of the municipal Township of Chillicothe; that the bonds were issued under and pursuant to an order of the County Court of Livingston County, authorized by a two thirds vote of the people of that township, as is recited in the bonds, and in aid of the St. Louis, Council Bluffs & Omaha Railroad, under authority of an Act of the Legislature of the State of Missouri, entitled

"An Act to Facilitate the Construction of Railroads in the State of Missouri," approved March 23, 1868, and of the Constitution of the State of Missouri; that, as each coupon for the semi-annual interest had, prior to July 1, 1876, matured, the same was paid by the officers of
105] the County, on behalf of said township, with the proceeds of a tax levied and collected each year by the County, from the taxpayers of the township, for that purpose; that, before the coupons sued on became due and payable, the bonds and coupons were sold to, and for value became the property of, the plaintiff, which had ever since been the legal holder, owner, and bearer thereof; and that the defendant, on and after July 1, 1876, had refused to pay any of the coupons then or since becoming due, or to levy any tax for their payment.

The provisions of the Act of March 23, 1868, in regard to the issuing of bonds, in the name of a county, in behalf of a municipal township, therein, which apply to the present case, are as follows (1 Wagner Statutes of Missouri of 1870, 313):

"Sec. 51. Whenever twenty-five persons, taxpayers and residents in any municipal township, for election purposes, in any county in this State, shall petition the county court of such county, setting forth their desire, as a township, to subscribe to the capital stock of any railroad company in this State, building or proposing to build a railroad into, through or near such township, and stating the amount of such subscription, and the terms and conditions on which they desire such subscription shall be made, it shall be the duty of the county court, as soon as may be thereafter, to order an election to be held in such township to determine if such subscription shall be made; which election shall be conducted and returns made in accordance with the laws controlling general and special elections; and if it shall appear, from the returns of such election, that not less than two thirds of the qualified voters of such township voting at such election are in favor of such subscription, it shall be the duty of the county court to make such subscription in behalf of such township, according to the terms and conditions thereof; and if such conditions provide for the issue of bonds in payment of such subscription, the county court shall issue such bonds in the name of the county, with coupons for interest attached; but the rate of interest shall not exceed ten per cent per annum; and the same shall be delivered to the railroad company.

"Sec. 52. In order to meet the payments on account of the subscription to the stock, according to its terms, or to pay the interest and principal on any bond which may be issued on account of such subscription, the county court shall, from time to time, levy and cause to be collected in the same manner as county taxes, a special tax, which shall be levied on all real estate lying within the township making the subscription, in accordance with the valuation then last made by the county assessor for county purposes.

"Sec. 53. The county treasurer shall be authorized and required to receive and collect of the sheriff of the county the income from the tax provided in the previous section, and to apply the same to the payment of the stock subscription, according to its terms, or to the payments of interest and principal on the bonds, should any be issued in payment of such subscription; he shall pay all interest on such bonds out of any money in the treasury collected for this purpose, by the tax so levied, as the same becomes due, and also the bonds as they mature, which shall be canceled by the county court; and this service shall be considered a part of his duty as county treasurer."

The answer of the defendant to the petition contains a general denial, and also sets forth that no petition was ever presented to the County Court of Livingston County by the taxpayers of the municipal Township of Chillicothe, as required by the Act of 1868, praying for the election named in the Act; nor did that court ever order any election to be held in the township, as to whether it would subscribe any amount to the capital stock of the St. Louis, Council Bluffs & Omaha Railroad Company; nor did the county court ever order, direct or authorize the bonds or the coupons in question to be issued; nor was any election ever held in the township to determine whether it, or the voters therein, would consent to any subscription on its account to the capital stock of the said railroad company, or to the issuing of the bonds and coupons; and that the issuing and delivery of them were without authority of the county court, and in violation of the Constitution and laws of Missouri. The answer also denied that the plaintiff was the owner and holder in good faith, and for value, of the bonds and coupons in question.

The plaintiff put in a replication to the an- [107]
swer, denying each and every allegation of new matter therein contained.

The cause was in due form heard by the court without the intervention of a jury, and it made a finding of facts and of conclusions of law in favor of the plaintiff, upon which a judgment for it was rendered, on the 6th of January, 1885, for $8,476.60, with costs, against the County of Livingston, "to be collected, if necessary, by *mandamus* against the County Court of said County, commanding it to levy and collect from Chillicothe municipal Township, in said County, a special tax according to law for the payment of said judgment, interest and costs, and to pay the same." To review this judgment the defendant has brought a writ of error.

The facts found by the circuit court, other than those which are merely formal, are as follows: The defendant issued twenty-four bonds, on the 10th of April, 1871, numbered consecutively from 1 to 24 inclusive, signed by the presiding justice of the county court, attested by the clerk, and with the seal thereof, each in the form before set forth, and with coupons in the form before given. The plaintiff, in April, 1871, bought all of the bonds and the coupons thereto attached and not then matured, in the open market, for cash, and without notice of any defect or infirmity therein or in the action of the county court in issuing the same, and has ever since been and still is the holder of the bonds and the unpaid coupons thereon, and, at the time of the institution of this suit, was the holder of the coupons then matured and described in the petition. The bonds were issued under the fol-

lowing circumstances: by articles of association entered into on the 18th day of June, 1867, and filed in the office of the Secretary of State of the State of Missouri on the 14th of July, 1868, a corporation was created by the name of the St. Louis, Chillicothe & Omaha Railroad Company. The articles declared that the object of the association was to construct, maintain and operate a railroad for public use in the conveyance of persons and property, from the City of Chillicothe, in the County of Livingston and State of Missouri, to such point on the boundary line between Missouri and Iowa [108] as should be deemed, after actual survey, "to be on the most direct and feasible route for constructing, maintaining and operating a railroad between the said City of Chillicothe and the City of Omaha in the State of Nebraska;" that the length of the railroad should be about ninety miles, and it should be made into or through the Counties of Livingston, Daviess and Gentry, and into or through one or more of the Counties of Nodoway, Harrison and Worth. The articles also declared that the association was "organized under and subject to the laws of the State of Missouri contained in chapters sixty-two and sixty-three of title XXIV of the General Statutes of Missouri of 1865, possessing all and singular the powers therein contained." General Statutes of Missouri of 1865, 326-344.

At a meeting of the stockholders of the St. Louis, Chillicothe & Omaha Railroad Company, held on the 4th of June, 1869, its name was changed, by their vote, to that of the Chillicothe & Omaha Railroad Company, and evidence thereof was filed in the office of the Secretary of State of the State of Missouri on the 25th of June, 1869.

On the 3d of May, 1870, a petition signed by more than twenty-five taxpayers and residents of the municipal Township of Chillicothe was filed in the County Court of Livingston County, setting forth that the petitioners, as a township, desired to subscribe $15,000 to the capital stock of the Chillcothe & Omaha Railroad Company, subject to the following conditions: "1. Payment of said subscription to be made in bonds of Livingston County (issued in accordance with the law regulating subscriptions by municipal townships to railroad companies), at par; said bonds to be payable fifteen years from the first day of July, 1870, and bearing interest at the rate of eight per cent per annum, payable semi-annually. 2. The bonds to be issued to said company when it shall have continuously graded its roadbed on or near its present located survey from the City of Chillicothe to the western boundary of Livingston County." The county court, on the 3d of May, 1870, made an order reciting the contents of the petition, and directing that an election be held at the usual place of voting [109] in the township, Chillicothe election district, on the 27th of May, 1870, to determine if such subscription should be made. The order prescribed the forms of the respective ballots, for and against the subscription. On the 25th of May, 1870, the county court made an order that the question to be voted upon at the election so to be held should be whether the township should subscribe $12,000 to the capital stock of the said railroad company, upon the same conditions as before mentioned, the ballots to be in like form.

The election was held on the 27th of May, 1870. On the 30th of May, 1870, the votes cast were duly canvassed, and an abstract thereof was made and entered of record in the county court, signed by the president of that court and a justice of the peace, and attested by the signature of the county clerk, showing that 320 votes had been cast for, and fifty votes against, the subscription of $12,000 to the capital stock of said company.

On the 23d of September, 1870, there were filed in the office of the Secretary of State of the State of Iowa articles of association, in conformity to chapter 52 of title 10 and other laws of Iowa, of the Revision of 1860, incorporating the St. Louis, Council Bluffs & Omaha Railroad Company in Iowa, to construct and operate a railroad. The articles contained the following clause: "The main line of said railroad shall extend from and from within the City of Council Bluffs, in the State of Iowa, and from such other point adjacent to the eastern terminus of the Union Pacific Railroad, on the banks of the Missouri River, as the board of directors may hereafter designate; thence in a southwesterly direction to the state line between the States of Iowa and Missouri, at a point where the Chillicothe & Omaha Railroad shall reach said state line, and, in the event of the consolidation of this company and corporation with the said Chillicothe & Omaha Railroad Company, a company incorporated under the general laws of the State of Missouri, then, in connection with the last mentioned railroad, to form a continuous line of railroad from the City of Omaha, in the State of Nebraska, and the City of Council Bluffs, in the State of Iowa, to the City of St. Louis, in the State of Missouri; and the board of directors of the corporation hereby created shall have the power [110] at any time, when the same can be lawfully done, to consolidate this corporation with the Chillicothe & Omaha Railroad, in Missouri, aforesaid, and this corporation shall have, hold, and by its board of directors exercise, all the powers, rights, privileges and franchises granted and conferred by the laws of the State of Iowa, Revision of A. D. 1860, and of all laws amendatory thereof and supplemental thereto." These articles had, on the 13th of September, 1880, been filed for record in the office of the Recorder of Pottawatomie County, in the State of Iowa.

At a meeting of the stockholders of the Chillicothe & Omaha Railroad Company, held on the 20th of September, 1870, "all the stock of the company being present thereat," a resolution was passed by the stockholders unanimously, directing the board of directors of the company to effect a consolidation of it with the St. Louis, Council Bluffs & Omaha Railroad Company, of the State of Iowa. Articles of consolidation were, on the same day, entered into between the two corporations, consolidating the two into one, "for the purpose of constructing, owning, maintaining, using and operating a continuous line of railroad from the City of Omaha, in Nebraska, and the City of Council Bluffs, in Iowa, to the City of Chillicothe, in Missouri, under the name of the St. Louis, Council Bluffs & Omaha Railroad Com-

pany." These articles of consolidation were executed by the president of the Chillicothe & Omaha Railroad Company, on behalf of that company, under a resolution of its board of directors to that effect, which was approved by more than three fourths of all the stock in the company. The articles of consolidation and the proceedings thereon on the part of the Chillicothe & Omaha Railroad Company were filed in the office of the Secretary of State of the State of Missouri on the 7th of October, 1870; and the same articles of consolidation and the proceedings of the meeting of stockholders of the Chillicothe & Omaha Railroad Company, authorizing the consolidation, were filed in the office of the Secretary of State of the State of Iowa, on the 19th of December, 1870.

In the year 1871 a railroad was constructed [111] by the corporation acting under the name of the St. Louis, Council Bluffs & Omaha Railroad Company, from the City of Chillicothe, in Livingston County, Missouri, upon and over the line set forth and described in the articles of association filed in the office of the Secretary of State of the State of Missouri on the 14th of July, 1868, to a point on the boundary line between the States of Missouri and Iowa, and has been continued thence to the City of Omaha, Nebraska, and has ever since been operated on that line.

The County of Livingston paid all the interest coupons on the twenty-four bonds as they respectively matured, to and including those falling due July 1, 1876, from the proceeds of taxes levied in each year upon the taxable property of Chillicothe Township in that County.

On the 21st of February, 1877, the County Court of Livingston County entered an order on its records, as follows: "*Whereas*, by a decision of the Supreme Court of the United States in a case wherein Bates County, of this State, was a party, it was held that all township bonds issued under and by virtue of an Act of the State of Missouri entitled 'An Act to Facilitate the Construction of Railroads in the State of Missouri,' approved March 23, 1868, are null and void, owing to the unconstitutionality of said Act, which decision, as we are informed, has since been reaffirmed by the United States Circuit *Judge* Dillon; *and whereas*, under and by virtue of said Act above recited, the County of Livingston, for the use and in behalf of the municipal Township of Chillicothe, did, in A. D. 1870, issue and deliver under said Act above recited, to the St. Louis, Council Bluffs & Omaha Railroad Company, a series of bonds, in amount twelve thousand dollars, to run for fifteen years, and each for the sum of five hundred dollars: *Now, therefore*, It appearing that all of said bonds are null and void, it is hereby ordered that, from and after this date, the treasurer of the county be commanded and directed to refuse payment of said bonds or any of them, together with all coupons for interest thereto attached, in whosesoever hands they may be found, or by whomsoever they may be presented, until otherwise directed by this court or by some competent superior authority."

[112] The conclusion of law of the circuit court upon the foregoing facts was in these words: "Upon consideration of the foregoing facts, which constitute all the facts and evidence produced in the cause, the court finds that the County of Livingston, in the State of Missouri, is indebted to the plaintiff, the First National Bank of Portsmouth, New Hampshire, by reason of the nonpayment of the coupons described in the petition and the facts aforesaid, in the sum of eight thousand four hundred and seventy-six dollars and sixty cents ($8,476.60)."

There is also found in the record a bill of exceptions. When the plaintiff offered in evidence the twenty-four bonds, the defendant objected, on the ground that the bonds were void on their faces, and showed no authority for their issue. The court overruled the objection and permitted the bonds to be read in evidence, to which ruling the defendant excepted. A like objection and exception were taken by the defendant to the reading in evidence of the coupons sued on. When the plaintiff offered in evidence the tax levies for the years 1872, 1873, 1874, 1875, and 1876, for the purpose of showing that in each of those years the County Court of Livingston County made a levy upon the property in the Township of Chillicothe, of taxes for the payment of the interest on the bonds in question, the defendant objected to the evidence, on the ground that there could be no ratification of the issuing of the bonds, if the issue was unlawful. The objection was overruled, and the defendant excepted. No other exceptions appear by the bill of exceptions.

The grounds urged for reversing the judgment are: (1) that the statutes of Missouri did not authorize the consolidation of a railroad [113] company organized under the laws of Missouri with a railroad company organized under the laws of another State; (2) that an authority to subscribe to stock in, and issue bonds to, the Chillicothe & Omaha Railroad Company was not an authority to subscribe to stock in, and issue bonds to, the St. Louis, Council Bluffs & Omaha Railroad Company; and (3) that it does not appear by the face of the bonds, or by the findings of the court, that the county court ordered any subscription for stock in either the Chillicothe & Omaha Railroad Company or the St. Louis, Council Bluffs & Omaha Railroad Company to be made, or that any subscription to the stock of either of those companies was in fact made, or that any stock of either company was ever issued to the County or to the Township.

(1) As to the authority for consolidation: It was enacted as follows by the Act of the Legislature of Missouri, approved March 2, 1869, entitled "An Act to Authorize the Consolidation of Railroad Companies in this State with Companies Owning Connecting Railroads in Adjoining States" (Laws of 1869, p. 75; and 1 Wagner's Missouri Stats. of 1870, p. 314, § 56): "Section 1. That any Railroad Company organized under the general or special laws of this State, whose track shall at the line of the State connect with the track of the railroad of any company organized under the general or special laws of any adjoining State, is hereby authorized to make and enter into any agreement with such connecting company, for the consolidation of the stock of the respective companies whose tracks shall be so connected, making one company of the two, whose

stock shall be so consolidated, upon such terms and conditions and stipulations, as may be mutually agreed upon between them, in accordance with the laws of the adjoining State in which the road is located, with which connection is thus formed." The statute then went on to enact details in regard to the consolidation. The fourth section of the Act provided as follows: "Sec. 4. Any such consolidated company shall be subject to all the liabilities, and bound by all the obligations of the company within this State, which may be [114] thus consolidated with one in the adjacent State, as fully as if such consolidation had not taken place, and shall be subject to the same duties and obligations to the State, and be entitled to the same franchises and privileges under the laws of this State, as if the consolidation had not taken place." This statute applied to the consolidation in question although no road had yet been constructed.

It is not contended that the provisions of this statute were not complied with in making the consolidation in question. The consolidated company was, by the statute, to be entitled to the same privileges under the laws of the State of Missouri as if the consolidation had not taken place. This can only mean that it was to be entitled to the same privileges under the laws of Missouri that the Missouri corporation was entitled to under the laws of that State at the time the consolidation took place. One of those privileges was the privilege of a subscription to stock by the Township of Chillicothe.

(2) As to the authority to subscribe to stock in, and issue bonds to, the St. Louis, Council Bluffs & Omaha Railroad Company, under the vote of the people of the township to subscribe to stock in, and issue bonds to, the Chillicothe & Omaha Railroad Company. The case of *Harshman* v. *Bates County*, 92 U. S. 569 [23: 747], decided by this court at October Term, 1875, is relied upon by the plaintiff in error as a decision against the validity of the bonds in that respect. It arose under the same statute of Missouri, of March 23, 1868. The bonds were issued by the County of Bates, in behalf of Mount Pleasant Township, in that county, to the Lexington, Lake & Gulf Railroad Company, in January, 1871. The taxpayers of the township had, in May, 1870, at an election, voted in favor of a subscription to the stock of, and the issue of bonds to, the Lexington, Chillicothe & Gulf Railroad Company. In October, 1870, that corporation was consolidated with another corporation, under the name of the Lexington, Lake & Gulf Railroad Company. Thereafter, in January, 1871, the county court, in pursuance only of the authority conferred by such vote, subscribed the specified amount, in behalf of the township, to the consolidated company, and issued the bonds to it in pay- [115] ment of the subscription. The objection was taken, that the question of subscribing to stock in, and issuing bonds to, the consolidated company was never submitted to a vote of the people of the township. This court held that as at the time of the consolidation, no subscription to stock had been made, and thus no vested right had accrued to the company named in the vote, the extinction of that company worked a revocation in law of the authority to subscribe to stock and to issue bonds. In that case it appeared by the face of the bonds that the vote of the people was to subscribe to the stock of the Lexington, Chillicothe & Gulf Railroad Company, and that that company and another had been consolidated under the name of the Lexington, Lake & Gulf Railroad Company. This court held that this recital in the bonds was sufficient to put the holder on inquiry, and that the bonds were invalid. The suit was brought by a holder of coupons attached to the bonds, against the county, to recover the amount of the coupons.

In *County of Scotland* v. *Thomas*, 94 U. S. 682 [24: 219], at October Term, 1876, the suit was brought on coupons attached to bonds issued by the County of Scotland, in the State of Missouri, on its own behalf, to the Missouri, Iowa & Nebraska Railway Company, for a subscription on behalf of the county to the stock of that corporation, which was a corporation formed by the consolidation, in March, 1870 (under the above mentioned Act of March, 2, 1869), of the Alexandria & Nebraska City Railroad Company, of Missouri (formerly the Alexandria & Bloomfield Railroad Company), with the Iowa Southern Railway Company, of Iowa. It was claimed that the power to subscribe to the stock had been given by the charter granted in 1857 by Missouri to the Alexandria & Bloomfield Railroad Company, before the adoption of the State Constitution of 1865, which required that the question of subscribing to stock should be submitted to a vote of the qualified votes of the county. No vote had been taken in the case. It was contended on behalf of the plaintiff that the consolidated corporation acquired, by the consolidation, all the privileges of the Alexandria & Nebraska City Railroad Company, and, among others, the privilege of receiving county subscriptions [116] to its capital stock. This court held that the prohibition of the Constitution of 1865 only extended to restraining the Legislature from authorizing in the future municipal subscriptions, or aid to private corporations, without a vote of the people of the municipality, but did not take away any authority previously granted to subscribe to stock without a vote of the people. It also held that the simple consolidation with another company did not extinguish the power of the county to subscribe, or the privilege of the company to receive a subscription. As authority for this view it cited the case of *State* v. *Green County*, 54 Mo. 540.

In the case of *County of Scotland* v. *Thomas* the power to consolidate was given in 1869, after the original Charter of 1857 was granted, and after the Constitution of 1865 went into effect; but it was held that that fact did not affect the power. In its opinion, the court said, p. 691 [220], that the railroad authorized by the Charter of 1857 "was 'a railroad from the City of Alexandria, in the County of Clark, in the direction of Bloomfield, in the State of Iowa, to such point on the northern boundary line of the State of Missouri as shall be agreed upon by said company, and a company authorized on the part of the State of Iowa, to construct a railroad to intersect the road authorized to be constructed by the provisions of this Act, at the most practicable point on said state line.' Bloomfield was a small town in Iowa, evident-

ly not intended as the final objective point of the proposed line, which is only required to be 'in the direction of Bloomfield.' A connection with a continuous road in Iowa was the declared object of the road proposed. It was evidently the purpose to bring Alexandria, a port of Missouri on the Mississippi River, in connection with the rich region of southern and western Iowa, by means of the road then being chartered, and a road to connect therewith, running into the State of Iowa. This purpose will be most effectually attained by the construction of the continuous line contemplated by the consolidated companies. The general direction of the road is not changed. It does not pass through Bloomfield, it is true; but it does not pass it by so far as to be a substantial [117] departure from the route originally indicated. The amending Act, therefore, which authorized a consolidation with the Iowa Southern Railway Company, and thereby constituted the Missouri, Iowa & Nebraska Railway Company, was in perfect accord with the general purpose of the original charter of the Alexandria & Bloomfield Railroad Company; and, if the other rights and privileges of the latter company passed over to the consolidated company, we do not see why the privilege in question should not do so, nor why the power given to the county to subscribe to the stock should not continue in force".

The court distinguished the case from that of *Harshman* v. *Bates County*, 92 U. S. 569 [23:747], on the ground that in that case the subscription to stock was made by the county court in behalf of a township, and that the county court was regarded as being the mere agent of the township, and as having no discretion to go beyond the precise terms of the power given to it, to subscribe to the stock of the company named in the vote; while in the case of *Scotland County* the county court acted as the representative authority of the county itself, and was officially invested with all the discretion necessary to be exercised under the change of circumstances brought about by the consolidation.

The court further proceeded to say, in the *Scotland County Case*, p. 693 [221]: "If we look at the subject in a broad and general view, it will be still more manifest that the power in question was intended to exist, notwithstanding the consolidation. The project of the railroad promised a great public improvement, conducive to the interests of Alexandria and the counties through which it would pass. Its construction, however, would greatly depend upon the local aid and encouragement it might receive. The interests of its projectors and of the country it was to traverse were regarded as mutual. The power of the adjacent counties and towns to subscribe to its stock, as a means of securing its construction, was desired not only by the company, but by the inhabitants. Whether the policy was a wise one or not is not now the question. It was in accordance with the public sentiment of that period. The power was sought at the hands of the Legisla- [118] ture, and was given. It was relied on by those who subscribed their private funds to the enterprise. It was involved in the general scheme as an integral part of it, and as much contributory and necessary to its success as the prospective right to take tolls. Why it should not still attach to this portion of the road, as one of the rights and privileges belonging to it, into whose hands soever it comes, by consolidation or otherwise, it is difficult to see."

The conclusion of the court was that the power of the County of Scotland to subscribe, being a right and privilege of the Alexandria & Nebraska City Railroad Company, passed, with its other rights and privileges, into the new conditions of existence which that company assumed under the consolidation, and this although the company with which the consolidation was effected belonged to the State of Iowa.

In *Town of East Lincoln* v. *Davenport*, 94 U. S. 801 [24:322], at October Term, 1876, which was a suit on coupons attached to bonds issued by a town in Illinois, provision had been made by statute, prior to the time when a subscription was made by that town to the stock of a railroad company, that the company might consolidate with other companies, in order to carry out the object of its charter, and that its franchises, rights, subscriptions and credits might be transferred, and such consolidation was effected, and a subsequent transfer by the consolidated company was lawfully made to a new company engaged in constructing a connecting road, thus forming a continuous line, the stockholders in the former companies becoming stockholders in the new company. It was held that a delivery by the town to such new company of bonds for the payment of the original subscription, and a receipt of a certificate of stock in the new company, were warranted by law. In the opinion of the court the doctrine of the case of *County of Scotland* v. *Thomas*, 94 U. S. 682 [24:219], was confirmed, and the distinction drawn in that case between it and the case of *Harshman* v. *Bates County*, 92 U. S. 569 [23:747], was adverted to.

In *County of Bates* v. *Winters*, 97 U. S. 83 [24:933], at October Term, 1877, the suit was brought to recover the amount of bonds and coupons issued by the County of Bates, in the State of Missouri, in behalf of Mount Pleasant [119] Township, in that county. The bonds were issued in January, 1871, to the Lexington, Lake & Gulf Railroad Company, a corporation formed by the consolidation of the Lexington, Chillicothe & Gulf Railroad Company with another corporation. The township had voted, in April, 1870, in favor of a subscription to the stock of, and the issue of bonds to, the Lexington, Chillicothe & Gulf Railroad Company. No subscription to the stock of that company was shown to have been made, but the subscription was made on the books of the new company formed by the consolidation. This court held that as, in fact, no subscription had been made to the stock of the Lexington, Chillicothe & Gulf Railroad Company, the bonds were void, under the ruling in *Harshman* v. *Bates County*, because the popular vote gave authority to subscribe to the stock of one company, while the subscription was made, and the bonds were issued, to a different company; and that the recitals in the bonds were such that there could be no *bona fide* holders of them. The bonds recited, on their face, that the vote had been on the proposition to subscribe to the capital stock of the Lexington, Chillicothe & Gulf Railroad Company, and that that com-

pany and another company had been consolidated into one company, under the name of the Lexington, Lake & Gulf Railroad Company, to which latter company the bonds were, on their face, issued. This court reversed the judgment below, which had been in favor of the plaintiff, and remanded the case for a new trial.

In *Wilson* v. *Salamanca*, 99 U. S. 499 [25:330], at October Term, 1878, the suit was against the Township of Salamanca, in Cherokee County, Kansas, to recover the amount of coupons detached from bonds issued by that township to the Memphis, Carthage & Northwestern Railroad Company. The bonds were issued in September, 1872, in pursuance of an election held in November, 1871, at which it was voted to subscribe to stock in, and issue bonds to, the State Line, Oswego & Southern Kansas Railroad Company. After the vote was had, the latter company was consolidated with another railroad company, into a new [120] corporation, to which the bonds were issued. The subscription was made to the stock of the new corporation, and no other vote was had than the one above mentioned. The case came up on questions certified, one of which was as follows: "Whether or not it is a defense to this action by a *bona fide* holder for value of the interest coupons sued on, without actual notice, that after the order of the board of county commissioners for an election, and after a favorable vote by a three fifths majority of the qualified electors of Salamanca Township, according to law, to subscribe stock in the State Line, Oswego & Southern Kansas Railroad Company, payable in negotiable bonds, to aid in the construction of its railroad, the subscription of stock and the issue of bonds without any further election were made to the Memphis, Carthage & Northwestern Railroad Company, with which said prior company, in whose favor the vote was had, had become merged and consolidated under a law existing at the time of said election, to form a continuous line." The judgment of the circuit court was in favor of the township; but this court reversed the judgment, and answered the above question in the negative, on the authority of the case of *County of Scotland* v. *Thomas*, 94 U. S. 682 [24:219]. The court said: "The power of the State Line, Oswego & Southern Kansas Railroad Company to consolidate with other companies existed when the vote for subscription was taken in the township. When the consolidation took place, there was a perfected power in the township to subscribe to the stock of that company, and there was also an existing privilege in the company to receive the subscription. That privilege, as we held in the *Scotland County Case*, passed by the consolidation to the consolidated company." The court distinguished the case from that of *Harshman* v. *Bates County*, 92 U. S. 569 [23:747], on the ground that the township trustee and the township clerk, who made the subscription and issued the bonds in the *Salamanca Township Case*, acted in their official capacity as the constituted authorities of the township, and its legal representatives, and not as mere agents, and occupied the position of the county court in the *Scotland County Case*.

In *Menasha* v. *Hazard*, 102 U. S. 81 [26:83], [121] at October Term, 1880, the suit was against the Town of Menasha, in the County of Winnebago and State of Wisconsin, to recover the amount of coupons detached from bonds issued by that town to the Wisconsin Central Railroad Company, in October, 1871. It had been voted by the town, in June, 1870, to issue bonds to the Portage, Winnebago & Superior Railroad Company. After the vote was had, and in November, 1870, the Portage, Winnebago & Superior Railroad Company was consolidated with another company, and its name was changed, in February, 1871, to that of the Wisconsin Central Railroad Company, and a further consolidation took place with a company in which the bonds were afterwards issued. It appeared that, before the subscription and bonds were voted, the Portage, Winnebago & Superior Railroad Company was authorized by statute to consolidate with other companies constructing connecting lines, and that the consolidation was effected in pursuance of the statute. This court held that, under these circumstances, the issuing of the bonds to the consolidated company was lawful.

In *Harter* v. *Kernochan*, 103 U. S. 562 [26: 411], at October Term, 1880, bonds had been voted by the Township of Harter, in Clay County, Illinois, as a donation to the Illinois Southeastern Railway Company, and were issued to the Springfield & Illinois Southeastern Railway Company, the latter company having been formed subsequently to the vote, by a consolidation between the former company and another company. This court held that the statutes of Illinois existing when the vote was taken authorized the consolidation, and that upon such consolidation, the new company succeeded to all the rights, franchises, and powers of the constituent companies. The court said, p. 574: "The power in the township to make a donation to aid in the construction of the Illinois Southeastern Railway was also a privilege of the latter corporation, and that privilege, upon the consolidation, passed to the new company. The donation was voted before the consolidation took effect, and since the consolidated or new company did not propose to apply such donation to purposes materially different from those for which the people voted it in 1868, its right to receive the dona- [122] tion, at least when the township assented, cannot be doubted." The validity of the bonds was upheld.

In *New Buffalo* v. *Iron Company*, 105 U. S. 73 [26: 1024], at October Term, 1881, the suit was brought on bonds and coupons issued by the Township of New Buffalo, in the County of Berrien and State of Michigan. The bonds had been voted by the township in May, 1869, as a donation in favor of the Chicago & Michigan Lake Shore Railroad Company. When the bonds were voted, there was in force a general statute under which any railroad company of the State, forming a continuous or connected line with any other railroad company in or out of the State, could consolidate with the latter. The statute provided that the new corporation should possess all the powers, rights and franchises conferred upon its constituent corporations, and that they should be deemed to be transferred to and vested in it. After the vote was had, the company to which the bonds were voted was consolidated with another company, into a new corporation, hav-

ing the name of the Chicago & Michigan Lake Shore Railroad Company. The point was taken, in this court, that the bonds were void because they were delivered to a company to which they were not voted. This court said: "The only remaining objection to the judgment is that the bonds were delivered to the consolidated company, when they were not voted to that company. We concur with the court below in holding that the aid voted must be deemed to have been given in view of the then existing statute, authorizing two or more railroad companies forming a continuous or connected line to consolidate and form one corporation, and investing the consolidated company with the powers, rights, property and franchises of the constituent companies. *Nugent* v. *Putnam Co. Supervisors*, 86 U. S. 19 Wall. 241 [22: 83]; *Scotland Co.* v. *Thomas*, and *East Lincoln* v. *Davenport*, 94 U. S. 682, 801 [24: 219, 322]; *Wilson* v. *Salamanca*, 99 U. S. 504 [25: 331]; *Empire* v. *Darlington*, 101 U. S. 87 [25: 878]; *Menasha* v. *Hazard*, 102 U. S. 81 [26: 83]; *Harter* v. *Kernochan*, and *Tipton Co.* v. *Rogers Locomotive & M. Works*, 103 U. S. 562, 523 [26: 411, 340]. The bonds were, therefore, rightfully delivered to the new or consolidated corporation." This court affirmed the judgment against the township.

[123] The new trial which was directed by this court in *County of Bates* v. *Winters*, 97 U. S. 83 [24: 933], took place and resulted in another judgment against Bates County, which was brought before this court in *Bates County* v. *Winters*, 112 U. S. 325 [28: 744], at October Term, 1884, The bonds were issued by the county court on behalf of the township. This court held that, at the second trial, an acceptance by the Lexington, Chillicothe & Gulf Railroad Company, of the subscription to its stock, had been shown, which made the subscription complete and binding as a subscription to the stock prior to the consolidation, the judgment in *County of Bates* v. *Winters*, 97 U. S. 83 [24; 933], having been reversed because it did not appear that the county court had actually subscribed to the capital stock of the Lexington, Chillicothe & Gulf Railroad Company before the consolidation. This court held in the case in 112 U. S. 325 [28: 744], that the valid subscription made prior to the consolidation rendered unnecessary a subscription to the stock of the consolidated company, which latter subscription it had held, in *Harshman* v. *Bates County*, 92 U. S. 569 [23: 747], and *County of Bates* v. *Winters*, 97 U. S. 83 [24: 933], to have been invalid. In the case in 112 U. S. 330 [28: 746], this court went on to say: "As the Lexington, Chillicothe & Gulf Company was organized under the general Railroad Law of Missouri, which authorized consolidations, the subsequent consolidation of that company with another organized under the same law did not avoid the subscription which was made to its stock on the 17th of June, and the bonds in payment of the subscription were properly delivered to the consolidated company. That has been many times decided. *New Buffalo* v. *Iron Co.* 105 U. S. 76 [26: 1025], and the cases there cited." This court held the bonds to be valid.

We do not think that the rigid rule laid down in the case of *Harshman* v. *Bates County*, 92 U. S. 569 [23: 747], ought to be applied to the present case, although it is a case of bonds issued by a county court in the State of Missouri on behalf of a township of the county. In the articles of association of the St. Louis, Chillicothe & Omaha Railroad Company it was declared that the object of the association was to construct, maintain and operate a railroad for public use from Chillicothe to such point on the boundary line between Missouri and Iowa [124] as should be deemed, after actual survey, to be on the most direct and feasible route for constructing, maintaining and operating a railroad between Chillicothe and Omaha, in Nebraska; and, by the same articles, it was provided that the association was organized under and subject to the laws of the State of Missouri, contained in chapters 62 and 63 of title XXIV of the General Statutes of Missouri of 1865, possessing all and singular the powers therein contained. The St. Louis, Council Bluffs & Omaha Railroad Company, in Iowa, was formed in September, 1870, to construct a railroad from Council Bluffs, in Iowa, to the state line between Iowa and Missouri, at a point where the Chillicothe & Omaha Railroad should reach such state line, and, in the event of the consolidation of the Iowa corporation with the Chillicothe & Omaha Railroad Company (which was the new and changed name of the St. Louis, Chillicothe & Omaha Railroad Company), then, in connection with that company, "to form a continuous line of railroad from the City of Omaha, in the State of Nebraska, and the City of Council Bluffs, in the State of Iowa, to the City of St. Louis, in the State of Missouri." The consolidation thus contemplated took place. The new company was called the St. Louis, Council Bluffs & Omaha Railroad Company, and the bonds were issued to it. They were issued as negotiable securities, to pay for the subscription voted to the stock of the Missouri corporation. The vote was that they should be issued in accordance with the law regulating subscriptions by municipal townships to railroad companies, in payment of a subscription to be made on behalf of the Township of Chillicothe to the stock of the Missouri company. The object of the consolidation was stated in the articles of consolidation to be to consolidate the two companies into one "for the purpose of constructing, owning, maintaining, using and operating a continuous line of railroad from the City of Omaha, in Nebraska, and the City of Council Bluffs, in Iowa, to the City of Chillicothe, in Missouri, under the name of the St. Louis, Council Bluffs & Omaha Railroad Company." The vote of the people to subscribe to the stock, followed by the issue of the bonds, was an adop- [125 tion of the articles of association of the Missouri company, not only with the powers and purposes expressed in those articles, and conferred by then existing statutes, but with all powers which had, prior to the vote, been conferred upon it by statute. The intention and purpose of the voters of the township in voting, and of the county court of the county in issuing the bonds, were fully carried out in what was done. The vote of the people contemplated and authorized the very thing that was done. The bonds were voted for the express purpose of constructing a road from Chillicothe to the boundary line between Missouri and Iowa,

with a view to continuing the road from such boundary line to Omaha, in Nebraska. This object was attained by means of the consolidation. The road was constructed by the consolidated company from Chillicothe to the boundary line between Missouri and Iowa, through the counties of Missouri named in the articles of association of the Missouri company, and was continued thence to Omaha, in Nebraska, and has ever since been operated upon that line. The object expressed in the articles of association of the Missouri company, of having a continuous road from Chillicothe to Omaha, was not only effectually accomplished by the consolidation, but could not have been accomplished without it. The Missouri corporation could not have built the road in Iowa, from the state line to Council Bluffs, and a railroad extending only from Chillicothe to the state line would not have answered the purpose contemplated. To say, therefore, that there has been any substantial diversion in the use of the bonds from the purpose contemplated by the vote of the people of the township, because of the consolidation and of the issuing of the bonds to the consolidated company, which has made the very road intended, because the authority conferred by the vote was nominally one only to issue the bonds to the Missouri corporation, is not a sound proposition, in view of the fact that the statute of Missouri expressly authorized the consolidation which took place. Under the facts of the case, the provision for consolidation became a part of the contract between the township and the railroad company, and the vote to issue the bonds to [126] the company was an assent to the exercise by it of all the corporate powers, including that of consolidation; with which it was invested at the time of the vote. So true is this that if the Missouri company had never been consolidated with the Iowa company, and the road had only been built to the state line, and no extension of it through Iowa to Council Bluffs and Omaha had been made, it might well have been urged that the citizens of the township had been defrauded, and that the purpose in issuing the bonds had not been carried out.

We think that, in the present case, the rule applied in the cases before cited, of *County of Scotland* v. *Thomas*, 94 U. S. 682 [24:219]; *East Lincoln* v. *Davenport*, 94 U. S. 801 [24:322]; *Wilson* v. *Salamanca*, 99 U. S. 499 [25:330]; *Menasha* v. *Hazard*, 102 U. S. 81 [26:83]; *Harter* v. *Kernochan*, 103 U. S. 562 [26:411]; *New Buffalo* v. *Iron Company*, 105 U. S. 73 [26:1024]; and *Bates County* v. *Winters*, 112 U. S. 325 [28:744], is the more proper and salutary one, and that the doctrine laid down in *Harshman* v. *Bates County*, 92 U. S. 569 [23:747], and in *Bates County* v. *Winters*, 97 U. S. 83 [24:933], that a county court in Missouri could not, on a vote by a township to issue bonds to a corporation named, issue the bonds to a company formed by the consolidation of that corporation with another corporation, would not be, if applied here, a sound doctrine.

(3) As to the objection that it does not appear by the finding of the circuit court that there was any formal order made by the county court for the issue of the bonds. By section 51 of the statute before cited, it was provided that if it should appear from the returns of the election that not less than two thirds of the qualified voters voting at the election were in favor of the subscription to the stock of the railroad company, it should be the duty of the county court to make the subscription in behalf of the township, according to the terms and conditions thereof, and that if those conditions provided for the issuing of bonds in payment of such subscription, the county court should issue such bonds in the name of the county and deliver them to the railroad company. This imposed a plain duty in the present case upon the county court, because the statute and the vote, taken together, authorized the subscription and the [127] issue of the bonds, and no formal order by the county court to do those acts was necessary. The acts were ministerial. The statute left no discretion in the county court, but made it the duty of the court to make the subscription and issue the bonds. The sole duty of the court was to ascertain that the proper vote had been had. The bonds state on their face that they are "issued under and pursuant to an order of the County Court of Livingston County, authorized by a two thirds vote of the people of Chillicothe municipal Township," and each bond also states that the county has executed it by the Presiding Justice of the County Court of the County, under an order of the court, signing his name to the bond, and by the clerk of the court, under the order thereof, attesting the same and affixing thereto the seal of the court, and it is so signed and attested and the seal is affixed.

Moreover, the finding of the circuit court is that the records of the county court show that that court made an order, on the 21st of February, 1877, stating that, under and by virtue of the statute of the State, approved March 23, 1868, the County of Livingston, for the use and in behalf of the municipal Township of Chillicothe, had issued and delivered the bonds in question to the St. Louis, Council Bluffs & Omaha Railroad Company. It is also found as a fact by the circuit court that the County of Livingston had made eleven semi-annual payments of interest on the bonds, from the proceeds of taxes levied in each year on the taxable property of the township.

The county court having been designated by the statute as the proper authority to determine that the conditions existed which authorized the making of the subscription, to be followed by the issuing of the bonds, the fact of the issue of the bonds by the county court, under its seal, with the recitals contained in the bonds, and the other facts above stated, estop the County from urging, as against a *bona fide* holder of the bonds and coupons, the existence of any mere irregularity in the making of the subscription or the issuing of the bonds. On the foregoing facts, it must be presumed that the subscription to the stock was made by the county court in behalf of the township, and the County is [128] estopped from asserting the contrary.

We are referred by the counsel for the plaintiff in error to the cases of *State* v. *Garroutte*, 67 Mo. 445; and *Weil* v. *Greene County*, 69 Mo. 281, as holding to the contrary of the views we have here announced. Independently of the fact that these decisions were made in 1878, many years after the bonds in the present case were issued, no such facts existed in those cases

as exist in the present case. In the case in 67 Missouri, the bonds were issued to the Hannibal & St. Joseph Railroad Company, to aid in building the Kansas City & Memphis Railroad, alleged to be a branch of the former road. The main line had never been built. The court said that a branch road necessarily presupposed a main trunk line; and that the Kansas City & Memphis Railroad was, for all practical purposes really a distinct and independent branch of the Hannibal & St. Joseph Railroad, the union existing merely in name but not in substance, and the branch road having separate stock and stockholders, president, directors and liabilities from the main road, so as to require, under the Constitution of Missouri of 1865, a vote of the people in favor of the issue of the bonds. There was no vote of the people in that case. In the case in 69 Missouri the bonds had been issued by Greene County to the Hannibal & St. Joseph Railroad Company, to aid in building the road through that county. The case did not show that there was any connection between the Hannibal & St. Joseph Railroad Company and the railroad to be built, nor what railroad it was, nor that Greene County had ever subscribed to the stock of any railroad company.

The exceptions taken on the trial, as above set forth, do not present any question different from those which have been discussed. The bonds and coupons were properly read in evidence, and so were the certified copies of the tax levies.

We find no error in the record, and the judgment of the Circuit Court is affirmed.

---

[129] WILLIAM G. ASHER, *Plff. in Err.*,
v.
STATE OF TEXAS.

(See S. C. Reporter's ed. 129-132.)

Law imposing tax on commercial drummer, unconstitutional.

The law of Texas requiring every commercial traveler or drummer to obtain a license and to pay a tax therefor is unconstitutional and void, when applied to citizens of other States soliciting trade in Texas.

[No. 781.]

Argued Oct. 11, 12, 1888. Decided Oct. 29, 1888.

IN ERROR to the Court of Appeals of the State of Texas, to review a judgment denying a *habeas corpus* for the discharge of plaintiff in error, who was imprisoned for failure to pay a fine imposed for a violation of the law in regard to drummers. *Reversed.*

Reported below, 23 Tex. App. 662.

The facts are stated in the opinion.

Messrs. **Abel Crook** and *John J. McElhone*, for plaintiff in error:

The State possesses the power to impose an occupation tax without discrimination upon its own citizens; but the statute imposing such tax, when applied to the citizens of other States, is unconstitutional.

Ward v. *Md.* 79 U. S. 12 Wall. 418 (20: 449); *Robbins* v. *Shelby Co. Tax Dist.* 120 U. S. 489 (30: 694); *Re Hennick*, 1 Inters. Com. Rep. 66, 7 Cent. Rep. 357; *Simmons Hardware Co.* v. *McGuire*, 2 South. Rep. 592; *Ex parte Rosenblatt*, 24 Rep. 570; *Ficklen* v. *Shelby Co.* 3 Ry. & Corp. L. J. 579; *Ex parte Stockton*, 33 Fed. Rep. 95; *Fargo* v. *Mich.* 121 U. S. 230 (30: 888); *Phila. & South. S. S. Co.* v. *Pa.* 122 U. S. 326 (30: 1200); *Leloup* v. *Port of Mobile*, 127 U. S. 640 (32: 311).

Messrs. **J. S. Hogg**, *Atty-Gen.* of Texas, and *W. L. Davidson, Asst. Atty-Gen.*, for defendant in error:

A tax on property that may be the subject of commerce is not a tax on commerce.

Com. v. *Holbrook*, 10 Allen, 202; Cooley, Tax. 62.

As to the levying and collection of taxes, Congress has not exclusive jurisdiction, but that power belongs to the State.

Cooley, Tax. 384, 605; *Loughborough* v. *Blake*, 18 U. S. 5 Wheat. 317 (5: 98).

The States may tax subjects of commerce where Congress has not acted at all upon the subject.

Cooley v. *Bd. of Wardens*, 53 U. S. 12 How. 299 (13: 996); *Crandall* v. *Nev.* 73 U. S. 6 Wall. 35 (18: 745); Cooley, Const. Lim. 605, 606.

A State can levy taxes upon business or property of nonresidents within that State.

Duer v. *Small*, 4 Blatchf. 263; *Com.* v. *Milton*, 12 B. Mon. 212, 218; *Catlin* v. *Hull*, 21 Vt. 152; *Nathan* v. *La.* 49 U. S. 8 How. 73, 82 (12: 996); *Corfield* v. *Coryell*, 4 Wash. C. C. 380.

The license issued by the Federal Government for revenue purposes does not supersede state regulations, and must be received subject to all such requirements of license fees as the State may have seen fit to impose.

McGuire v. *Com.* 70 U. S. 3 Wall. 388 (18: 226); *Pervear* v. *Com.* 72 U. S. 5 Wall. 475, 480 (18: 608); *Com.* v. *Thorniley*, 6 Allen, 445; *Com.* v. *Keenan*, 11 Allen, 262; *Block* v. *Jacksonville*, 36 Ill. 301; *State* v. *Carney*, 20 Iowa, 82; *State* v. *Stutz*, 20 Iowa, 488.

A law imposing a license tax on transient persons doing business within the State does not violate the provisions of the Federal Constitution.

2 Desty, Taxn. 1389; *Cole* v. *Randolph*, 31 La. Ann. 535; *State* v. *Shapleigh* and *State* v. *North*, 27 Mo. 344, 464; *Biddle* v. *Com.* 13 Serg. & R. 405.

A state law imposing a license fee upon merchants who go from place to place soliciting orders is not unconstitutional.

2 Desty, Taxn. 1390; *Colson* v. *State*, 7 Blackf. 590; *Sears* v. *Warren Co.* 36 Ind. 267; *Re Rudolph*, 2 Fed. Rep. 65.

A State can levy taxes upon business or property of nonresidents within the State.

Duer v. *Small*, 4 Blatchf. 263; *Com.* v. *Milton*, 12 B. Mon. 212-218; *Osborne* v. *Mobile*, 83 U. S. 16 Wall. 479-483 (21: 470, 473).

Mr. Justice **Bradley** delivered the opinion of the court:

This is a writ of error to the Court of Appeals of the State of Texas in a case of *habeas corpus*. By an Act of the Legislature of Texas, passed May 4, 1882, it was provided that there shall be levied on and collected "from every commercial traveler, drummer, salesman or solicitor of trade by sample or

Insurable interest of wife or children in life of husband—policies for their benefit—not liable for debt—premiums.

1. The wife and children have an insurable interest in the life of the husband and father; and if insurance thereon be taken out by him, payable to the wife or children, or for their benefit, and he pays the premiums, his creditors, upon his death, are not entitled to the insurance moneys.

2. Where contracts of insurance are made for the benefit of a wife or children, or both, upon their insurable interest in the life of the husband or father, the latter, while they are living, can exercise no power of disposition over the same without their consent; nor has he any interest therein of which he can avail himself; nor upon his death have his personal representatives or his creditors any interest in the proceeds of such contracts; but they belong to the beneficiaries, to whom they are payable.

3. A policy, and the money to become due under it, belongs, the moment it is issued, to the person or persons named in it as the beneficiary or beneficiaries; and there is no power in the person procuring the insurance, by any act of his, by deed or by will, to transfer to any other person the interest of the person named.

4. Nor are the creditors of the husband entitled to recover the premiums paid by him on policies issued on his own life but for the benefit of and payable to his wife and children where there is no evidence from which a fraudulent intent on the part of the latter or the insurance companies can be inferred.

[Nos. 29, 30.]

Argued Oct. 17, 18, 1888. Decided Nov. 12, 1888.

APPEALS from a decree of the Supreme Court of the District of Columbia, that the administrators recover the sums paid as premiums on policies of insurance, and that the residue of the amount due on the policies be paid to the widow, etc. *Decree reversed in part.*

Reported below, 3 Mackey, 360.

Statement by *Mr. Chief Justice* **Fuller:**

On the 23d of April, 1872, in consideration of an annual premium of $230.89, the life insurance Company of Virginia issued at Petersburgh, in that Commonwealth, a policy of insurance on the life of Thomas L. Hume, of Washington, D. C., for the term of his natural life, in the sum of $10,000, for the sole use and benefit of his wife, Annie Graham Hume, and his children, payment to be made to them, their heirs, executors, or assigns, at Petersburgh, Virginia.

The charter of the company provided as follows: "Any policy of insurance issued by the Life Insurance Company of Virginia on the life of any person, expressed to be for the benefit of any married woman, whether the [196] same be effected originally by herself or her husband, or by any other person, or whether the premiums thereafter be paid by herself or her husband or any other person as aforesaid, shall enure for her sole and separate use and benefit and that of her or husband's children, if any, as may be expressed in said policy, and shall be held by her free from the control or claim of her husband or his creditors, or of the person effecting the same and his creditors." Sec. 7.

The application for this policy was made on behalf of the wife and children by Thomas L. Hume, who signed [illegible] hem.

The premium o[illegible] iuced by annual dividends of [illegible], which sum was regularly p[illegible] April, 1872, and each year th[illegible] d including the 23d of April,

On the 28th of March, 1880, the Hartford Life and Annuity Company of Hartford, Connecticut, issued five certificates of insurance upon the life of Thomas L. Hume, of $1,000 each, payable at Hartford to his wife, Annie G. Hume, if living, but otherwise to his legal representatives. Upon each of these certificates a premium of ten dollars was paid upon their issuance, amounting in all to $50, and thereafter certain other sums, amounting at the time of the death of Hume to $41.25.

On the 17th of February, 1881, the Maryland Life Insurance Company of Baltimore issued, at Baltimore, a policy of insurance upon the life of Thomas L. Hume, in the sum of $10,000, for the term of his natural life, payable in the City of Baltimore to "the said insured, Annie G. Hume, for her sole use, her executors, administrators, or assigns;" the said policy being issued, as it recites on its face, in consideration of the sum of $337.20 to them duly paid by said Annie G. Hume, and of an annual premium of the same amount to be paid each year during the continuance of the policy. The application for this policy was signed "Annie G. Hume, by Thomas L. Hume," as is a recognized usage in such applications and in accordance with instructions to that effect printed upon the policy.

The charter of the Maryland Life Insurance Company provides as follows: "Section 17. [197] That it shall be lawful for any married woman, by herself or in her name or in the name of any third person, with his consent, as her trustee, to be caused to be insured in said company, for her sole use, the life of her husband, for any definite period or for the term of his natural life; and in case of her surviving her husband the sum or net amount of the insurance becoming due and payable by the terms of the insurance shall be payable to her to and for her own use, free from the claims of the representatives of her husband or of any of his creditors. In case of the death of the wife before the decease of the husband, the amount of the insurance may be made payable, after the death of the husband, to her children, or, if under age, to their guardian, for their use; in the event of there being no children, she may have power to devise, and if dying intestate, then to go [to] the next of kin."

The directions printed on the margin of the policy called especial attention to the provisions of the charter upon this subject, an extract from which was printed on the fourth page of the application. The amount of premium paid on this policy was $242.26, a loan having been deducted from the full premium of $337.20.

On the 18th of June, 1881, the Connecticut Mutual Life Insurance Company, of Hartford, in consideration of an annual premium of $350.30, to be paid before the day of its date, issued a policy of insurance upon the life of Thomas L. Hume, in the sum of $10,000, for the term of his natural life, payable at Hartford to Annie G. Hume and her children by him, or their legal representatives. The application for this policy was signed "Annie G. Hume, by Thomas L. Hume." It was expressly provided as part of the contract, that the policy was issued and delivered at Hartford, in the State of Connecticut, and was "to be in

[No. 1037].

Submitted Oct. 22, 1888. Decided Oct. 29, 1888.

IN ERROR to the Court of Appeals of the State of Maryland, to review a judgment in favor of Bradshaw for damages by fire to his schooner, resulting from defendant's negligence.

On motion to dismiss. *Motion granted.*

Reported below, 11 Cent. Rep. 535.

The facts are stated by the court.

Messrs. **B. Howard Haman** and **Wm. A. Hammond,** for defendant in error, in support of motion:

To give the supreme court jurisdiction to review the judgment of a state court, under section 709 of the Revised Statutes, it must appear that some title, right, privilege or immunity is claimed under the Constitution or any treaty or Statute of the United States, and the decision is against the title, right, privilege or immunity specially set up or claimed.

Spies v. *Ill.* 123 U. S. 181 (31:91).

This court must be able to see clearly from the whole record that a certain provision of the Constitution or Act of Congress was relied on by the party who brings the writ of error, and that the right thus claimed by him was denied.

Bridge Proprietors v. *Hoboken Land & Imp. Co.* 68 U. S. 1 Wall. 116-143 (17:571-576); *Crowell* v. *Randell*, 35 U. S. 10 Pet. 368 (9:458); *Susquehanna Boom Co.* v. *West Branch Boom Co.* 110 U. S. 57 (28:69); *Simmerman* v. *Neb.* 116 U. S. 54 (29:535).

The defense on the merits does not preclude defendant from claiming the benefit of the limitation.

The Benefactor, 103 U. S. 239 (26:351); *The Scotland*, 105 U. S. 24 (26:1001).

Mr. **Wm. A. Fisher,** for plaintiff in error, in opposition:

It is sufficient if it appears, by clear and necessary intendment, that the question must have been decided in order to have induced the judgment.

Crowell v. *Randell*, 35 U. S. 10 Pet, 397 (9:469); *Commercial Bank* v. *Buckingham*, 46 U. S. 5 How. 341 (12:180); *Williams* v. *Oliver*, 53 U. S. 12 How. 124 (13:921); *Christ Church* v. *Phila. Co.* 61 U. S. 20 How. 28 (15:803); *Hamilton Co.* v. *Mass.* 73 U. S. 6 Wall. 636 (18:906); *Boughton* v. *Exchange Bank*, 104 U. S. 427 (26:765).

[133] *Mr. Chief Justice* **Fuller** delivered the opinion of the court:

Bradshaw recovered judgment December 6, 1887, against Chappell in the Circuit Court for Howard County, Maryland, in an action of trespass on the case, after a trial by jury upon a plea of not guilty, for damages by fire to his (Bradshaw's) schooner, alleged to have resulted from the negligence of Chappell's servants in cutting a burning scow or lighter loose from Chappell's wharf and allowing it to drift against Bradshaw's vessel. From this judgment Chappell prosecuted an appeal to the Court of Appeals of Maryland, by which tribunal the judgment was affirmed on the 14th day of March, 1888.

On the 27th of March Chappell moved for a rehearing, upon the ground, which had not been up to that time presented in any form, that the Circuit Court for Howard County should have limited the measure of damages to the value of the scow which occasioned the injury complained of, under the provisions of section 18, chapter 121 of the Act of Congress of June 26, 1884. 23 Stat. at Large, p. 57. The court of appeals overruled the motion, because, as the court states, "This Act of Congress was not before the circuit court when the case was tried, nor before this court on appeal, and that no reference to it or construction of it was made in either court."

After an unsuccessful application therefor to the Chief Judge of the court of appeals a writ of error was finally allowed by one of the Justices of this court, and now comes before us upon a motion to dismiss.

To give this court jurisdiction to review the judgment of a state court under section 709 of the Revised Statutes, because of the denial by a state court of any title, right, privilege or immunity claimed under the Constitution or [134] any treaty or statute of the United States, it must appear on the record that such title, right, privilege or immunity was "specially set up or claimed" at the proper time in the proper way. "To be reviewable here," says Waite, *C. J.*, in *Spies* v. *Illinois*, 123 U. S. 181 [31:91], "the decision must be against the right so set up or claimed. As the supreme court of the State was reviewing the decision of the trial court, it must appear that the claim was made in that court, because the supreme court was only authorized to review the judgment for errors committed there, and we can do no more." Tested by this well settled rule it is apparent that this writ of error cannot be maintained, as it is conceded that the plaintiff in error did not set up or claim in the trial court the limitation, the benefit of which he now insists should have been accorded him.

As to the contention of plaintiff in error, also not brought forward below but suggested for the first time when application was made to the Chief Judge of the court of appeals to allow the writ of error, that the state court had no jurisdiction because the jurisdiction of the Courts of the United States is exclusive in all cases of admiralty and maritime jurisdiction, and that this is necessarily such a case, it is sufficient to say that, as the action as brought and defended was a common-law action without any of the ingredients of an admiralty or maritime cause, it was, as such, clearly within the provision of the ninth section of the Judiciary Act of 1789, as embodied in section 563 of the Revised Statutes, "saving to suitors in all cases the right of a common-law remedy where the common law is competent to give it."

The motion must be granted and the writ dismissed, and it is so ordered.

CENTRAL NATIONAL BANK OF WASHINGTON CITY ET AL., *Appts.* [195]

v.

ANNIE G. HUME ET AL.

ANNIE G. HUME, *Appt.*,

v.

CENTRAL NATIONAL BANK OF WASHINGTON CITY ET AL.

(See S. C. Reporter's ed. 195-212.)

Insurable interest of wife or children in life of husband—policies for their benefit—not liable for debt—premiums.

1. The wife and children have an insurable interest in the life of the husband and father; and if insurance thereon be taken out by him, payable to the wife or children, or for their benefit, and he pays the premiums, his creditors, upon his death, are not entitled to the insurance moneys.

2. Where contracts of insurance are made for the benefit of a wife or children, or both, upon their insurable interest in the life of the husband or father, the latter, while they are living, can exercise no power of disposition over the same without their consent; nor has he any interest therein of which he can avail himself; nor upon his death have his personal representatives or his creditors any interest in the proceeds of such contracts; but they belong to the beneficiaries, to whom they are payable.

3. A policy, and the money to become due under it, belongs, the moment it is issued, to the person or persons named in it as the beneficiary or beneficiaries; and there is no power in the person procuring the insurance, by any act of his, by deed or by will, to transfer to any other person the interest of the person named.

4. Nor are the creditors of the husband entitled to recover the premiums paid by him on policies issued on his own life but for the benefit of and payable to his wife and children where there is no evidence from which a fraudulent intent on the part of the latter or the insurance companies can be inferred.

[Nos. 29, 30.]

Argued Oct. 17, 18, 1888. Decided Nov. 12, 1888.

APPEALS from a decree of the Supreme Court of the District of Columbia, that the administrators recover the sums paid as premiums on policies of insurance, and that the residue of the amount due on the policies be paid to the widow, etc. *Decree reversed in part.*

Reported below, 3 Mackey, 360.

Statement by *Mr. Chief Justice* **Fuller:**

On the 23d of April, 1872, in consideration of an annual premium of $230.89, the life insurance Company of Virginia issued at Petersburgh, in that Commonwealth, a policy of insurance on the life of Thomas L. Hume, of Washington, D. C., for the term of his natural life, in the sum of $10,000, for the sole use and benefit of his wife, Annie Graham Hume, and his children, payment to be made to them, their heirs, executors, or assigns, at Petersburgh, Virginia.

The charter of the company provided as follows: "Any policy of insurance issued by the Life Insurance Company of Virginia on the life of any person, expressed to be for the benefit of any married woman, whether the [196] same be effected originally by herself or her husband, or by any other person, or whether the premiums thereafter be paid by herself or her husband or any other person as aforesaid, shall enure for her sole and separate use and benefit and that of her or husband's children, if any, as may be expressed in said policy, and shall be held by her free from the control or claim of her husband or his creditors, or of the person effecting the same and his creditors." Sec. 7.

The application for this policy was made on behalf of the wife and children by Thomas L. Hume, who signed the same for them.

The premium of $230.89 was reduced by annual dividends of $34.71 to $196.18, which sum was regularly paid on the 23d of April, 1872, and each year thereafter, up to and including the 23d of April, 1881.

On the 23th of March, 1880, the Hartford Life and Annuity Company of Hartford, Connecticut, issued five certificates of insurance upon the life of Thomas L. Hume, of $1,000 each, payable at Hartford to his wife, Annie G. Hume, if living, but otherwise to his legal representatives. Upon each of these certificates a premium of ten dollars was paid upon their issuance, amounting in all to $50, and thereafter certain other sums, amounting at the time of the death of Hume to $41.25.

On the 17th of February, 1881, the Maryland Life Insurance Company of Baltimore issued, at Baltimore, a policy of insurance upon the life of Thomas L. Hume, in the sum of $10,000, for the term of his natural life, payable in the City of Baltimore to "the said insured, Annie G. Hume, for her sole use, her executors, administrators, or assigns;" the said policy being issued, as it recites on its face, in consideration of the sum of $337.20 to them duly paid by said Annie G. Hume, and of an annual premium of the same amount to be paid each year during the continuance of the policy. The application for this policy was signed "Annie G. Hume, by Thomas L. Hume," as is a recognized usage in such applications and in accordance with instructions to that effect printed upon the policy.

The charter of the Maryland Life Insurance Company provides as follows: "Section 17. [197] That it shall be lawful for any married woman, by herself or in her name or in the name of any third person, with his consent, as her trustee, to be caused to be insured in said company, for her sole use, the life of her husband, for any definite period or for the term of his natural life; and in case of her surviving her husband the sum or net amount of the insurance becoming due and payable by the terms of the insurance shall be payable to her to and for her own use, free from the claims of the representatives of her husband or of any of his creditors. In case of the death of the wife before the decease of the husband, the amount of the insurance may be made payable, after the death of the husband, to her children, or, if under age, to their guardian, for their use; in the event of there being no children, she may have power to devise, and if dying intestate, then to go [to] the next of kin."

The directions printed on the margin of the policy called especial attention to the provisions of the charter upon this subject, an extract from which was printed on the fourth page of the application. The amount of premium paid on this policy was $242.26, a loan having been deducted from the full premium of $337.20.

On the 13th of June, 1881, the Connecticut Mutual Life Insurance Company, of Hartford, in consideration of an annual premium of $350.30, to be paid before the day of its date, issued a policy of insurance upon the life of Thomas L. Hume, in the sum of $10,000, for the term of his natural life, payable at Hartford to Annie G. Hume and her children by him, or their legal representatives. The application for this policy was signed "Annie G. Hume, by Thomas L. Hume." It was expressly provided as part of the contract, that the policy was issued and delivered at Hartford, in the State of Connecticut, and was "to be in

all respects construed and determined in accordance with the laws of that State."

The "statute of Connecticut respecting policies of insurance issued for the benefit of married women" was printed upon the policy under that heading, and is as follows: "Any policy of life insurance expressed to be for the benefit of a married woman, or assigned to her or in trust for her, shall inure to her separate use, or, in case of her decease before payment, to the use of her children, or of her husband's children, as may be provided in such policy; *Provided*, That, if the annual premium on such policy shall exceed three hundred dollars, the amount of such excess, with interest, shall inure to the benefit of the creditors of the person paying the premiums; but if she shall die before the person insured, leaving no children of herself or husband, the policy shall become the property of the person who has paid the premiums, unless otherwise provided in such policy;" and this extract from the statute was printed upon the policy and attention directed thereto. From the $350.30 premium the sum of $105 was deducted, to be charged against the policy in accordance with its terms, with interest, and $245.30 was therefore the sum paid.

The American Life Insurance and Trust Company of Philadelphia had also issued a policy in the sum of $5,000 on the life of Hume, payable to himself or his personal representatives, and this was collected by his administrators.

Thomas L. Hume died at Washington on the 23d of October, 1881, insolvent, his widow Annie G. Hume and six minor children surviving him.

November 2, 1881, the Central National Bank of Washington, as the holder of certain promissory notes of Thomas L. Hume, amounting to several thousand dollars, filed a bill in the Supreme Court of the District of Columbia against Mrs. Hume and the Maryland Life Insurance Company, the case being numbered 7906, alleging that the policy issued by the latter was procured while Hume was insolvent; that Hume paid the premium of $242.26 without complainant's knowledge or consent and for the purpose of hindering, delaying and defrauding the complainant and his other creditors; and praying for a restraining order on the insurance company from paying to, and Mrs. Hume from receiving, either for herself or children, the amount due pending the suit, and "that the amount of the said insurance policy may be decreed to be assets of said Thomas L. Hume applicable to the payment of debts owing by him at his death," etc. The temporary injunction was granted.

On the 12th of November, the insurance company filed its answer to the effect that Mrs. Hume obtained the insurance in her own name, and was entitled under the policy to the amount thereof, and setting up and relying upon the 17th section of its charter, quoted above. Mrs. Hume answered, November 16, declaring that she applied for and procured the policy in question, and that it was not procured with fraudulent intent; that the estate of her father, A. H. Pickrell, who died in 1879, was the largest creditor of Hume's estate; that she is her father's residuary legatee; that the amount of the policy was intended not only to provide for her, but also to secure her against loss; that her mother had furnished Hume with about a thousand dollars annually to be used for her best interests and that of his wife and children; and that the premium paid on the policy in question and those paid on other policies, was and were paid out of money belonging to her father's estate, or out of the money of her mother, applied as directed and requested by the latter.

Benjamin U. Keyser, receiver, holding unpaid notes of Hume, was allowed, by order of court, November 16, 1881, to intervene as co-complainant in the cause.

R. Ross Perry and Reginald Fendall were appointed, November 26, 1881, Hume's administrators.

On January 23, 1882, the administrators filed three bills (and obtained injunctions) against Mrs. Hume and each of the other insurance companies, being cases numbered 8011, 8012, 8013, attacking each of the policies (except the American) as a fraudulent transfer by an insolvent of assets belonging to his creditors.

The answers of Mrs. Hume were substantially the same *mutatis mutandis* as above given, and so were the answers of the Connecticut Mutual and the Virginia Life, the former pleading the statute of Connecticut as part of its policy and the latter the seventh section of its charter.

The Hartford Life and Annuity Company did not answer, and the bill to which it was a party defendant was taken *pro confesso*.

The administrators were, by order of court, January 2, 1883, admitted parties defendant to said first case numbered 7906, and cases numbered 8011, 8012 and 8013 were consolidated with that case.

January 4, 1883, the court entered a decretal order, dissolving the restraining order in original cause numbered 8012, and directing the Virginia Insurance Company to pay the amount due upon its policy into court, and the clerk of the court to pay the same over to Mrs. Hume, for her own benefit and as guardian of her children (which was done accordingly), and continuing the injunctions in original causes 8011, 8013, 7906, but ordering the other insurance companies to pay the amounts due into the registry of the court.

By order of court, January 30, 1883, the Farmers' and Mechanics' National Bank of Georgetown, which had proved up a large claim against Hume's estate, was allowed to intervene in original cause No. 7906 as a co-complainant; and March 19, 1883, George W. Cochran, a creditor, was by like order allowed to intervene as co-complainant in the consolidated cases.

Replications were filed and testimony taken on both sides.

The evidence tends to show that Hume's financial condition as early as 1874 was such that if called upon to respond on the instant, he could not have met his liabilities, and that this condition grew gradually worse until it culminated in irretrievable ruin in the fall of 1881; but it also indicates that for several years, and up to October 21, 1881, two days before his death, he was a partner in a going concern apparently of capital and credit; that he had a consider-

able amount of real estate, though most of it was heavily encumbered; that he was an active business man, not personally extravagant; and that he was, for two years prior to October, in receipt of moneys from his wife's mother, who had an income from her separate property.

He seems to have received from Mrs. Pickrell, or the estate of Pickrell, his wife's father, of which Mrs. Hume was the residuary legatee, over six thousand dollars in 1879, over three thousand dollars in 1880, and over seventeen hundred dollars in 1881.

[201] Mrs. Pickrell's fixed income was one thousand dollars a year from rents of her own property, which, after the death of her husband in May, 1879, was regularly paid over to Mr. Hume. She testifies that she told Hume that "he could use all that I [she] had for his own and his family's benefit, and that he could use it for anything he thought best;" that she had out of it herself from $200 to $250 a year from the death of Pickrell, in May, 1879, to that of Hume, in October, 1881, and that before his death Mr. Hume informed his wife and herself that he had insured his life for Mrs. Hume's benefit, but did not state where the premium money came from.

Blackford, agent for the Maryland company, testified, under objection, that Hume told him in February, 1881, that certain means had been placed in his hands, to be invested for his wife and children, and he had concluded to take $10,000 in Blackford's agency, and should, some months later, take $10,000 in the Connecticut Mutual. He accordingly took $10,000 in the Maryland, and subsequently, during the summer, informed Blackford that he had obtained the insurance in the Connecticut Mutual.

Evidence was also adduced that Mr. Hume was largely indebted to Pickrell's estate, by reason of indorsements of his paper by Pickrell, and the use by him in raising money of securities belonging to the latter, and that said estate is involved in litigation and its ultimate value problematical.

The causes were ordered to be heard in the first instance at a general term of the Supreme Court of the District of Columbia, which court, after argument, on the 5th day of January, 1885, decreed that the administrators should recover all sums paid by Thomas L. Hume as premiums on all said policies, including those on the Virginia policy from 1874, and that after deducting said premiums the residue of the money paid into court (being that received from the Maryland and the Connecticut Mutual) be paid to Mrs. Hume individually or as guardian for herself and children, and that the Hartford Life and Annuity Company pay over to her the amount due on the certificates issued by it.

[202] From this decree the said Central National Bank, Benjamin U. Keyser, the Farmers' and Mechanics' National Bank of Georgetown, George W. Cochran, and the administrators, as well as Mrs. Hume, appealed to this court; and the cause came on to be heard here upon these cross appeals.

Messrs. Walter D. Davidge, Reginald Fendall and **R. Ross Perry**, for the Bank and Administrators, and *Messrs. Edwards & Barnard*, for creditors:

A voluntary settlement of a policy of assurance under the Statute of Elizabeth, taken in connection with the Insolvent Debtors' Act, was held in England to be fraudulent upon the death of the settlor.

Bunyon, Life Assur. 273; *Sims* v. *Thomas*, 12 Ad. & Ell. 536; *Northcutt* v. *Dodd*, 1 Craig & P. 100.

A transfer of choses in action is liable to investigation on the ground of fraud. A court of equity may reach property which is not liable to legal process at law.

Schondler v. *Wace*, 1 Campb. 487; *Graves* v. *Dolphin*, 1 Sim. 66; *Brandon* v. *Robinson*, 18 Ves. 429; *Green* v. *Spicer*, 1 Russ. & Myl. 395; *Piercy* v. *Roberts*, 1 Myl. & K. 4; *Skarf* v. *Soulby*, 1 Macn. & G. 364; *Penhall* v. *Elwin*, 1 Smale & G. 267; *French* v. *French*, 6 De G., M. & G. 95; *Jenkyn* v. *Vaughan*, 3 Drew. 419; *Neale* v. *Day*, 28 L. J. Ch. 45; *Stokes* v. *Cowan*, 29 Beav. 637; *Freeman* v. *Pope*, L. R 5 Ch. App. Cas. 538; *Taylor* v. *Coenen*, L. R 1 Ch. Div. 636.

A policy of insurance upon the life of a person is a chose in action, and as such liable to the payment of the debts of the party in whose favor it is issued, and is therefore within the statute against fraudulent conveyances.

Elliott's App. 50 Pa. 75; *Anderson's Est.* 85 Pa. 202; *Stokes* v. *Coffey*, 8 Bush, 533; *Thompson* v. *Cundiff*, 11 Bush, 567; *Hathaway* v. *Sherman*, 61 Maine, 475; *Anthracite Ins. Co.* v. *Sears*, 109 Mass. 383; *Barry* v. *Eq. Life Assur. Society*, 59 N. Y. 593; *Pence* v. *Makepeace*, 65 Ind. 360; *Stigler* v. *Stigler*, 77 Va. 163; *Succession of Hearing*, 26 La. Ann. 326.

Proof of fraud in fact is not required in a case like this.

Wait, Fraud. Conv. §§ 9, 10, 382; Bump, Fraud. Conv. 22-25, 27.

An insolvent debtor cannot make a settlement with his creditors' money, on his wife or children, or on both.

Taylor v. *Jones*, 2 Atk. 600; *Simmonds* v. *Kinnaird*, 4 Ves. 735.

Mrs. Hume was not a purchaser for a valuable consideration.

Seitz v. *Mitchell*, 94 U. S. 580 (24: 179); *Humes* v. *Scruggs*, 94 U. S. 22 (24: 51); *Bessen* v. *Eveland*, 26 N. J. Eq. 472; *Knowlton* v. *Mish*, 8 Sawy. 625; *Palmer* v. *Merrill*, 6 Cush. (Mass.) 282; *Basket* v. *Hassell*, 107 U. S. 602 (27: 500).

The administrators represent the creditors.

Hagan v. *Walker*, 55 U. S. 14 How. 34 (14: 315).

An assignment, within the Statute of 13 Eliz. chap. 5, is utterly void against creditors, and the property assigned is assets for the payment of debts.

3 Wms. Exrs. 7th Am. ed. 1781, marg. p. 1679, and authorities cited; *Shears* v. *Rogers*, 3 Barn. & Ad. 362; *Skarf* v. *Soulby*, 1 Macn. & G. 364.

In equity an executor or administrator may, as the representative of creditors, assail a fraudulent transfer.

Holland v. *Cruft*, 20 Pick. 321, cited and approved in *Hagan* v. *Walker*, *supra*; *Welsh* v. *Welsh*, 105 Mass. 229; *Chase* v. *Redding*, 13 Gray, 418; *Caswell* v. *Caswell*, 28 Maine, 232; *Gibbens* v. *Peeler*, 8 Pick. 254; *McLane* v. *Johnson*, 43 Vt. 48.

And also at law.

McLean v. *Weeks*, 61 Maine, 277; *Martin* v. *Root*, 17 Mass. 222; *Buehler* v. *Gloninger*, 2 Watts, 226; *Stewart* v. *Kearney*, 6 Watts, 458; *Minor* v. *Mead*, 3 Conn. 289; *Andrus* v. *Doolittle*, 11 Conn. 283.

Such transfers are not good at law and are supported in equity only as contracts to assign.

Ryall v. *Rowles*, 2 White & T. Lead. Cas. Eq. *734; 2 Story, Eq. Jur. 1040; 2 Wms. Exrs. 917.

The gifts sought here to be enforced are from husband to wife. Such gifts are at law absolutely void.

2 Kent, Com. 132, 162; *Wallingsford* v. *Allen*, 35 U. S. 10 Pet. 583 (9: 542); *Babcock* v. *Eckler*, 24 N. Y. 623; *Hunt* v. *Johnson*, 44 N. Y. 31; Rev. Stat. D. C. § 727.

The whole transaction was managed exclusively by the husband and without the knowledge of the wife.

Basket v. *Hassell*, 107 U. S. 602 (27: 500).

The proceeds belong to the estate of the decedent who paid the considerations.

Bump, Fraud. Conv. 3d ed. 240, 241, and cases cited (n. 4), also p. 254; *Rider* v. *Kidder*, 10 Ves. 360.

Messrs. **Enoch Totten** and *J. Holdsworth Gordon*, for Annie G. Hume:

The proceeds of a policy of insurance issued on the life of a husband, payable to the wife, or to the wife and children, cannot be touched by the creditors of the insured. Such policies are not fraudulent as to creditors.

Bank v. *Hume*, 3 Mackey, 384; *Succession of Hearing*, 26 La. An. 326; *Goodrich* v. *Treat*, 3 Col. 408; *Elliott's App.* 50 Pa. 75; *McCutcheon's App.* 99 Pa. 133, 137.

Where the courts have assumed to give creditors any claim upon the proceeds of policies on their face in favor of wife or children, it has only been to the extent of the amount of the premiums paid by the insured,—the balance going to the beneficiaries,—and even then only upon the "clearest proof of fraud, if at all."

Pence v. *Makepeace*, 65 Ind. 347; *Ætna Nat. Bank* v. *U. S. Life Ins. Co.* 24 Fed. Rep. 770; *Stigler* v. *Stigler*, 77 Va. 163.

The administrators cannot maintain this action. They cannot be heard under our laws to assail the good faith of their intestate.

Hagan v. *Walker*, 55 U. S. 14 How. 34 (14: 315); *Christy* v. *Pridgeon*, 71 U. S. 4 Wall. 196 (18: 322); *League* v. *Egery*, 65 U. S. 24 How. 264 (16: 655); *Shelby* v. *Guy*, 24 U. S. 11 Wheat. 361 (6: 495); *Leffingwell* v. *Warren*, 67 U. S. 2 Black, 599 (17: 261); *Davis* v. *Swanson*, 54 Ala. 277; *Allein* v. *Sharp*, 7 Gill & J. 96; *Dorsey* v. *Smithson*, 6 Harr. & J. 61; *Goodrich* v. *Treat*, 3 Col. 408; Bump, Fraud. Conv. 444, note; *Kinnemon* v. *Miller*, 2 Md. Ch. 407; *Choteau* v. *Jones*, 11 Ill. 310; *Masonic Mut. Relief Asso.* v. *McAuley*, 2 Mackey, 70; *Tierney* v. *Corbett*, Id. 264; *Burton* v. *Farinholt*, 86 N. C. 260.

A voluntary conveyance as between the parties, their personal representatives and heirs, is valid.

Bump, Fraud. Conv. 444, note; *Davis* v. *Swanson*, *Dorsey* v. *Smithson*, *Goodrich* v. *Treat*, *Burton* v. *Farinholt*, and *Choteau* v. *Jones*, *supra*; *Coltraine* v. *Causey*, 3 Ired. Eq. 246; *Sturdivant* v. *Davis*, 9 Ired. Law, 365.

Hume received money from Mrs. Pickrell and used the money thus acquired for the procurement of the policies in dispute.

As to the competency, as evidence, of Hume's declaration, see *Darling* v. *Bryant*, 17 Ala. 10; *Bell* v. *Ansley*, 16 East, 141, 143; *Deming* v. *Carrington*, 12 Conn. 1; *Norton* v. *Pettibone*, 7 Conn. 319; *Bradley* v. *Spofford*, 23 N. H. 444; *Nelson* v. *Iverson*, 24 Ala. 9; 1 Greenl. Ev. §§ 147, 148; 2 Sm. Lead. Cas. pt. 2, 1010; *Holladay* v. *Littlepage*, 2 Munf. 318.

The Central National Bank was in no way injured, even if there was a fraud; and not being injured, it cannot be heard to complain.

Sexton v. *Wheaton*, 1 Am. Lead. Cas. Eq. 37; *Clarke* v. *White*, 37 U. S. 12 Pet. 178, 195 (9: 1046, 1053); Bispham, Eq. 310.

Here was a total indebtedness actually and equitably due from Hume to his wife, amounting to about $54,000. Her equity was as good as that of any other creditor, and he could secure her as well as he could the Bank.

Hitz v. *Nat. Met. Bank*, 111 U. S. 722 (28: 577); *Woodworth* v. *Sweet*, 51 N. Y. 9; *Syracuse Chilled Plow Co.* v. *Wing*, 85 N. Y. 421; 1 Bishop, Mar. Women, § 119; *Hyde* v. *Powell*, 47 Mich. 156; *Smith* v. *Seiberling*, 35 Fed. Rep. 677.

Fraud had not been satisfactorily proven.

Sexton v. *Wheaton*, 21 U. S. 8 Wheat. 229 (5: 603); *Hinde* v. *Longworth*, 24 U. S. 11 Wheat. 213 (6: 457); *Seward* v. *Jackson*, 8 Cow. 407.

A husband may take insurance policies on his own life for the benefit of his family; and in the absence of a statute his creditors cannot reach it.

May, Ins. 599, note; *Succession of Hearing*, 26 La. Ann. 326; *Elliott's App.* 50 Pa. 75; *Anderson's Est.* 85 Pa. 202; *McCutcheon's App.* 99 Pa. 133; *Pence* v. *Makepeace*, 65 Ind. 345; *Thompson* v. *Cundiff*, 11 Bush, 569.

A life policy issued on the life of a husband for the sole benefit of the wife, immediately vests in the beneficiary and cannot be devested.

Ellison v. *Ellison*, 1 White & T. Lead. Cas. Eq. 421; Bliss, Life Ins. §§ 318, 345; *Glanz* v. *Gloeckler*, 104 Ill. 573; *North Am. Life Ins. Co.* v. *Wilson*, 111 Mass. 542; *Hutson* v. *Merrifield*, 51 Ind. 24.

The Statute of 13 Eliz., chap. 5, relates to antecedent and not to subsequent creditors.

Sexton v. *Wheaton*, *supra*; *Mattingly* v. *Nye*, 75 U. S. 8 Wall. 370 (19: 380); *Smith* v. *Vodges*, 92 U. S. 183 (23: 481).

The policy is not the contract, but only the evidence of it.

Glanz v. *Gloeckler*, 104 Ill. 573; *Succession of Hearing*, 26 La. Ann, 326; *Hathaway* v. *Sherman*, 61 Maine, 473.

Mr. Chief Justice **Fuller** delivered the opinion of the court: [203]

No appeal was prosecuted from the decree of January 4, 1883, directing the amount due upon the policy issued by the Life Insurance Company of Virginia to be paid over to Mrs. Hume for her own benefit and as guardian of her children, nor is any error now assigned to the action of the court in that regard. Indeed, it is conceded by counsel for the complainants that this contract was perfectly valid as against the world; but it is insisted that, assuming the proof to establish the insolvency of Hume in 1874 and thenceforward, the premiums paid in that and the subsequent years on this policy belonged in equity to the creditors, and that they were en-

titled to a decree therefor as well as for the amount of the Maryland and Connecticut policies and the premiums paid thereon.

It is not denied that the contract of the Maryland Insurance Company was directly between that company and Mrs. Hume, and this is, in our judgment, true of that of the Connecticut Mutual, while the Hartford company's certificates were payable to her, if living.

Mr. Hume having been insolvent at the time the insurance was effected, and having paid the premiums himself, it is argued that these policies were within the provisions of 13 Elizabeth, c. 5, and inure to the benefit of his creditors as equivalent to transfers of property with intent to hinder, delay, and defraud. The object of the Statute of Elizabeth was to prevent debtors from dealing with their property in any way to the prejudice of their creditors; but dealing [204] with that which creditors, irrespective of such dealing, could not have touched, is within neither the letter nor the spirit of the statute. In the view of the law, credit is extended in reliance upon the evidence of the ability of the debtor to pay, and in confidence that his possessions will not be diminished to the prejudice of those who trust him. This reliance is disappointed, and this confidence abused, if he divests himself of his property by giving it away after he has obtained credit. And where a person has taken out policies of insurance upon his life for the benefit of his estate, it has been frequently held that, as against creditors, his assignment, when insolvent, of such policies, to or for the benefit of wife and children, or either, constitutes a fraudulent transfer of assets within the statute, and this, even though the debtor may have had no deliberate intention of depriving his creditors of a fund to which they were entitled, because his act has in point of fact withdrawn such a fund from them, and dealt with it by way of bounty. *Freeman* v. *Pope*, L. R. 9 Eq. Cas. 206; *S. C.* L. R. 5 Ch. App. Cas. 538. The rule stands upon precisely the same ground as any other disposition of his property by the debtor. The defect of the disposition is that it removes the property of the debtor out of the reach of his creditors. *Cornish* v. *Clark*, L. R. 14 Eq. Cas. 189.

But the rule applies only to that which the debtor could have made available for payment of his debts. For instance, the exercise of a general power of appointment might be fraudulent and void under the statute, but not the exercise of a limited or exclusive power, because, in the latter case, the debtor never had any interest in the property himself which could have been available to a creditor, or by which he could have obtained credit. May on Fraud. Conv. p. 33. It is true that creditors can obtain relief in respect to a fraudulent conveyance where the grantor cannot; but that relief only restores the subjection of the debtor's property to the payment of his indebtedness as it existed prior to the conveyance.

A person has an insurable interest in his own life for the benefit of his estate. The contract affords no compensation to him, but to his rep- [205] resentatives. So the creditor has an insurable interest in the debtor's life, and can protect himself accordingly, if he so chooses. Marine and fire insurance is considered as strictly an indemnity; but while this is not so as to life insurance, which is simply a contract, so far as the company is concerned, to pay a certain sum of money upon the occurrence of an event which is sure at some time to happen, in consideration of the payment of the premiums as stipulated, nevertheless the contract is also a contract of indemnity. If the creditor insures the life of his debtor, he is thereby indemnified against the loss of his debt by the death of the debtor before payment; yet, if the creditor keeps up the premiums, and his debt is paid before the debtor's death, he may still recover upon the contract, which was valid when made, and which the insurance company is bound to pay according to its terms; but if the debtor obtains the insurance on the insurable interest of the creditor, and pays the premiums himself, and the debt is extinguished before the insurance falls in, then the proceeds would go to the estate of the debtor. *Knox* v. *Turner*, L. R. 9 Eq. Cas. 155.

The wife and children have an insurable interest in the life of the husband and father; and if insurance thereon be taken out by him and he pays the premiums and survives them, it might be reasonably claimed, in the absence of a statutory provision to the contrary, that the policy would inure to his estate.

In *Continental Life Ins. Co.* v. *Palmer*, 42 Conn. 60, the wife insured the life of the husband, the amount insured to be payable to her if she survived him, if not, to her children. The wife and one son died prior to the husband, the son leaving a son surviving. The court held that, under the provisions of the statute of that State, the policy being made payable to the wife and children, the children immediately took such a vested interest in the policy, that the grandson was entitled to his father's share, the wife having died before the husband; but that, in the absence of the statute, "It would have been a fund in the hands of his representatives for the benefit of the creditors, provided the premiums had been paid by him." So in the case of *Anderson's Estate, Hay's and Kerr's Appeal*, 85 Pa. St. 202, A. insured his life in favor of his wife, who died intestate in his life- [206] time, leaving an only child. A. died intestate and insolvent, the child surviving; and the court held that the proceeds of the policy belonged to the wife's estate, and, under the intestate laws, was to be distributed share and share alike between her child and her husband's estate, notwithstanding, under a prior statute, life insurance taken out for the wife vested in her free from the claims of the husband's creditors. But if the wife had survived she would have taken the entire proceeds.

We think it cannot be doubted that in the instance of contracts of insurance with a wife or children, or both, upon their insurable interest in the life of the husband or father, the latter, while they are living, can exercise no power of disposition over the same without their consent, nor has he any interest therein of which he can avail himself; nor upon his death have his personal representatives or his creditors any interest in the proceeds of such contracts, which belong to the beneficiaries to whom they are payable.

It is indeed the general rule that a policy, and the money to become due under it, belong, the moment it is issued, to the person or persons

named in it as the beneficiary or beneficiaries, and that there is no power in the person procuring the insurance, by any act of his, by deed or by will, to transfer to any other person the interest of the person named. Bliss, Life Ins. 2d ed. p. 517; *Glanz* v. *Gloeckler*, 10 Ill. App. 486, per McAllister, *J.*; *S. C.* 104 Ill. 573; *Wilburn* v. *Wilburn*, 83 Ind. 55; *Ricker* v. *Charter Oak Life Ins. Co.* 27 Minn. 193; *Charter Oak Life Ins. Co.* v. *Brant*, 47 Mo. 419; *Gould* v. *Emerson*, 99 Mass. 154; *Knickerbocker Life Ins. Co.* v. *Weitz*, Id. 157.

This must ordinarily be so where the contract is directly with the beneficiary; in respect to policies running to the person insured, but payable to another having a direct pecuniary interest in the life insured; and where the proceeds are made to enure by positive statutory provisions.

Mrs. Hume was confessedly a contracting party to the Maryland policy; and as to the Connecticut contracts, the statute of the State [207] where they were made and to be performed, explicitly provided that a policy for the benefit of a married woman shall enure to her separate use or that of her children; but if the annual premium exceed three hundred dollars, the amount of such excess shall enure to the benefit of the creditors of the person paying the premiums.

The rights and benefits given by the laws of Connecticut in this regard are as much part of these contracts as if incorporated therein, not only because they are to be taken as if entered into there, but because there was the place of performance, and the stipulation of the parties was made with reference to the laws of that place.

And if this be so as between Hume and the Connecticut companies, then he could not have at any time disposed of these policies without the consent of the beneficiary. Nor is there anything to the contrary in the statutes or general public policy of the District of Columbia.

It may very well be that a transfer by an insolvent of a Connecticut policy, payable to himself or his personal representatives, would be held invalid in that District, even though valid under the laws of Connecticut, if the laws of the District were opposed to the latter, because the positive laws of the domicil and the forum must prevail; but there is no such conflict of laws in this case in respect to the power of disposition by a person procuring insurance payable to another.

The obvious distinction between the transfer of a policy taken out by a person upon his insurable interest in his own life, and payable to himself or his legal representatives, and the obtaining of a policy by a person upon the insurable interest of his wife and children, and payable to them, has been repeatedly recognized by the courts.

Thus in *Elliott's Appeal*, 50 Pa. 75, where the policies were issued in the name of the husband, and payable to himself or his personal representatives, and while he was insolvent were by him transferred to trustees for his wife's benefit, the Supreme Court of Pennsylvania, while holding such transfers void as against creditors, say:

"We are to be understood in thus deciding this case that we do not mean to extend it to policies effected without fraud directly and on their face [208] for the benefit of the wife, and payable to her; such policies are not fraudulent as to creditors, and are not touched by this decision."

In the use of the words "without fraud," the court evidently means actual fraud participated in by all parties, and not fraud inferred from the mere fact of insolvency; and, at all events, in *McCutcheon's Appeal*, 99 Pa. 137, the court say, referring to *Elliott's Appeal:*

"The policies in that case were effected in the name of the husband, and by him transferred to a trustee for his wife at a time when he was totally insolvent. They were held to be valuable choses in action, the property of the assured, liable to the payment of his debts; and hence their voluntary assignment operated in fraud of creditors, and was void as against them under the Statute of 13th Elizabeth. Here, however, the policy was effected in the name of the wife, and in point of fact was given under an agreement for the surrender of a previous policy for the same amount also issued in the wife's name . . . The question of good faith or fraud only arises in the latter case; that is, when the title of the beneficiary arises by assignment When it exists by force of an original issue in the name, or for the benefit of the beneficiary, the title is good, notwithstanding the claims of creditors. . . . There is no anomaly in this, nor any conflict with the letter or spirit of the Statute of Elizabeth, because in such cases the policy would be at no time the property of the assured; and hence no question of fraud in its transfer could arise as to his creditors. It is only in the case of the assignment of a policy that *once belonged* to the assured that the question of fraud can arise under this Act."

And see *Ætna Nat. Bank* v. *U. S. Life Ins. Co.* 24 Fed. Rep. 770; *Pence* v. *Makepeace*, 65 Ind. 345; *Succession of Hearing*, 26 La. Ann. 326; *Stigler* v. *Stigler*, 77 Va. 163; *Thompson* v. *Cundiff*, 11 Bush, 567.

Conceding, then, in the case in hand, that Hume paid the premiums out of his own money, when insolvent, yet, as Mrs. Hume and the children survived him, and the contracts covered their insurable interest, it is difficult to [209] see upon what ground the creditors, or the administrators as representing them, can take away from these dependent ones that which was expressly secured to them in the event of the death of their natural supporter. The interest insured was neither the debtor's nor his creditors'. The contracts were not payable to the debtor, or his representatives, or his creditors. No fraud on the part of the wife, or the children, or the insurance company, is pretended. In no sense was there any gift or transfer of the debtor's property, unless the amounts paid as premiums are to be held to constitute such gift or transfer. This seems to have been the view of the court below, for the decree awarded to the complainants the premiums paid to the Virginia company from 1874 to 1881, inclusive, and to the other companies from the date of the respective policies, amounting, with interest to January 4, 1883, to the sum of $2,696.10, which sum was directed to be paid to Hume's administrators out of the money which had been paid into court by the Maryland and Connecticut Mutual companies.

But, even though Hume paid this money out of his own funds when insolvent, and if such payment were within the Statute of Elizabeth, this would not give the creditors any interest in the proceeds of the policies, which belonged to the beneficiaries for the reasons already stated.

Were the creditors, then, entitled to recover the premiums?

These premiums were paid by Hume to the

insurance companies, and to recover from them would require proof that the latter participated in the alleged fraudulent intent, which is not claimed. Cases might be imagined of the payment of large premiums, out of all reasonable proportion to the known or reputed financial condition of the person paying, and under circumstances of grave suspicion, which might justify the inference of fraud on creditors in the withdrawal of such an amount from the debtor's resources; but no element of that sort exists here.

The premiums form no part of the proceeds of the policies, and cannot be deducted therefrom on that ground.

Mrs. Hume is not shown to have known of [210] or suspected her husband's insolvency; and if the payments were made at her instance, or with her knowledge and assent, or if, without her knowledge, she afterwards ratified the act, and claimed the benefit, as she might rightfully do (*Thompson* v. *Am. Ins. Co.* 46 N. Y. 675), and as she does (and the same remarks apply to the children), then has she thereby received money which *ex æquo et bono* she ought to return to her husband's creditors, and can the decree against her be sustained on that ground?

If in some cases payments of premiums might be treated as gifts inhibited by the Statute of Elizabeth, can they be so treated here?

It is assumed by complainants that the money paid was derived from Hume himself, and it is therefore argued that to that extent his means for payment of debts were impaired. That the payments contributed in any appreciable way to Hume's insolvency, is not contended. So far as premiums were paid in 1880 and 1881 (the payments prior to those years having been the annual sum of $196.18 on the Virginia policy), we are satisfied from the evidence that Hume received from Mrs. Pickrell, his wife's mother, for the benefit of Mrs. Hume and her family, an amount of money largely in excess of these payments, after deducting what was returned to Mrs. Pickrell, and that in paying the premiums upon procuring the policies in the Maryland and the Connecticut Mutual, Hume was appropriating to that purpose a part of the money which he considered he thus held in trust; and we think that, as between Hume's creditors and Mrs. Hume, the money placed in Hume's hands for his wife's benefit is, under the evidence, equitably as much to be accounted for to her by Hume, and so by them, as is the money paid on her account to be accounted for by her to him or them.

We do not, however, dwell particularly upon this, nor pause to discuss the bearing of the laws of the States of the insurance companies upon this matter of the payment of premiums by the debtor himself, so far as they may differ from the rule which may prevail in the District of Columbia, in the absence of specific statutory enactment upon that subject, because we prefer to place our decision upon broader grounds.

[211] In all purely voluntary conveyances it is the fraudulent intent of the donor which vitiates. If actually insolvent, he is held to knowledge of his condition; and if the necessary consequence of his act is to hinder, delay, or defraud his creditors, within the statute, the presumption of the fraudulent intent is irrebuttable and conclusive, and inquiry into his motives is inadmissible.

But the circumstances of each particular case should be considered, as in *Partridge* v. *Gopp*, 1 Eden, 163; *S. C.* Amb. 596, where the Lord Keeper, while holding that debts must be paid before gifts are made, and debtors must be just before they are generous, admitted that "The fraudulent intent might be collected from the magnitude and value of the gift."

Where fraud is to be imputed, or the imputation of fraud repelled, by an examination into the circumstances under which a gift is made to those towards whom the donor is under natural obligation, the test is said, in *Kipp* v. *Hanna*, 2 Bland, 33, to be the pecuniary ability of the donor at that time to withdraw the amount of the donation from his estate without the least hazard to his creditors, or in any material degree lessening their then prospects of payment; and in considering the sufficiency of the debtor's property for the payment of debts, the probable, immediate, unavoidable, and reasonable demands for the support of the family of the donor should be taken into the account and deducted, having in mind also the nature of his business and his necessary expenses. *Emerson* v. *Bemis*, 69 Ill. 541.

This argument in the interest of creditors concedes that the debtor may rightfully preserve his family from suffering and want. It seems to us that the same public policy which justifies this, and recognizes the support of wife and children as a positive obligation in law as well as morals, should be extended to protect them from destitution after the debtor's death, by permitting him, not to accumulate a fund as a permanent provision, but to devote a moderate portion of his earnings to keep on foot a security for support already, or which could thereby be, lawfully obtained—at least to the extent of requiring that, under such circum- [212
stances, the fraudulent intent of both parties to the transaction should be made out.

And inasmuch as there is no evidence from which such intent on the part of Mrs. Hume or the insurance companies could be inferred, in our judgment none of these premiums can be recovered.

The decree is affirmed, except so far as it directs the payment to the administrators of the premiums in question and interest, and, as to that, is reversed, and the cause remanded to the court below, with directions to proceed in conformity with this opinion.

Ordered accordingly.

THE GEORGIA RAILROAD AND BANKING COMPANY, *Plff. in Err.*, [174
v.
JAMES M. SMITH ET AL., R. R. COMMISSIONERS.

(See S. C. Reporter's ed. 174-182.)

Charges of a railroad company—legislative control over charter—proviso—contract—exemption.

1. The Legislature of the State has the power to prescribe the charges of a railroad company for the carriage of persons and merchandise within its

limits, in the absence of any provision in the charter of the company constituting a contract vesting in it authority over those matters—subject to the limitation that the carriage is not required without reward, or upon conditions amounting to the taking of property for public use without just compensation, and that what is done does not amount to a regulation of foreign or interstate commerce.

2. Where property and employment is affected with a public use, the business in which it is used is subject to legislative control, in all respects necessary to protect the public against danger, injustice and oppression.

3. In the 12th section of the charter of the Georgia Railroad and Banking Company, there is no contract that it may make any charges within the limits there designated.

4. The general purpose of a proviso is to except the clause covered by it from provisions of a statute or to qualify the operation of the statute. But it is often used as a conjunction to an independent paragraph.

5. A railroad corporation is a private corporation, although its uses are public, and a contract embodied in terms in its charter or necessarily implied by it, is within the constitutional clause prohibiting legislation impairing the obligation of contracts.

6. But to effect this result the exemption must appear by such clear and unmistakable language that it cannot be reasonably construed consistently with the reservation of the power by the State.

[No. 28.]

Argued Oct. 16, 17, 1888. Decided Oct. 29, 1888.

IN ERROR to the Supreme Court of the State of Georgia, to review a judgment sustaining a demurrer and dismissing a suit brought to declare void an Act of the Legislature regulating railroad freight and passenger tariffs, and to enjoin the Commission from prescribing rates of fare and freight. *Affirmed.*

Statement by *Mr. Justice* **Field:**

By an Act of the Legislature of Georgia, passed December 21, 1833, the plaintiff in error was incorporated under the name of the Georgia Railroad Company, and empowered to construct a "rail or turnpike road from the City of Augusta," with branches extending to certain towns in the State, and to be carried beyond those places at the discretion of the Company. Laws of 1833, 256.

By an Act of the Legistature, passed December 18, 1835, certain amendments to the charter were made, and among others one changing its corporate name to "The Georgia Railroad and Banking Company," its present designation.

The twelfth section of the charter, among other things, declares that "The said Georgia [175] Railroad Company shall, at all times, have the exclusive right of transportation or conveyance of persons, merchandise and produce, over the railroad and railroads to be by them constructed, while they see fit to exercise the exclusive right; *Provided*, That the charge of transportation or conveyance shall not exceed fifty cents per hundred pounds, on heavy articles, and ten cents per cubic foot, on articles of measurement, for every one hundred miles; and five cents per mile for every passenger; *Provided, always*, That the said Company may, when they see fit, rent or farm out all or any part of their exclusive right of transportation or conveyance of persons, on the railroad or railroads, with the privilege to any individual or individuals, or other company, and for such terms as may be agreed upon, subject to the rates above mentioned. And the said Company, in the exercise of their right of carriage or transportation of persons or property, or the persons so taking from the Company the right of transportation or conveyance, shall, so far as they act on the same, be regarded as common carriers." In pursuance of the authority conferred by this section the Company, by a deed bearing date on the 7th of May, 1881, leased to one William M. Wadley, for the term of 99 years, "all its privileges, general and exclusive," of transporting persons and property over the lines of railroad owned and controlled by it, to the full extent that it then enjoyed, or was entitled to enjoy, or might thereafter acquire, subject to the obligations and duties imposed by its charter. With these privileges the Company also leased to Wadley, for the same term, all its railroads and their branches, "together with its rights of way, roadbeds, depots, stations, warehouses, elevators, workshops, wells, cisterns, water tanks, and other appurtenances." The lessee on his part covenanted to pay the Company, as a consideration for the lease, the sum of $600,000 annually, for the full term of ninety-nine years, in two semi-annual payments; also to pay the taxes on the property and franchises; to return the property on the termination of the lease in as good condition as it was at its date; to keep the railroad and its appurtenances and the means of transportation in first class condition, and to indemnify the Company against any damages, losses [176 or liabilities in the operation of the roads. This lessee has since died, and in the present case his interests were maintained in the court below by his executor.

On the 14th of October, 1879, the Legislature of Georgia passed an Act entitled "An Act to Provide for the Regulation of Railroad Freight and Passenger Tariffs in This State; to Prevent Unjust Discrimination and Extortion in the Rates Charged for Transportation of Passengers and Freight, and to Prohibit Railroad Companies, Corporations, and Lessees in This State from Charging Other Than Just and Reasonable Rates, and to Punish the Same, and Prescribe a Mode of Procedure and Rules of Evidence in Relation Thereto, and to Appoint Commissioners, and to Prescribe Their Powers and Duties in Relation to the Same." Laws of 1879, 125.

In pursuance of this Act a board was constituted, designated the Railroad Commission, composed of three members, originally consisting of James M. Smith, Campbell Wallace, and Samuel Barnett; but to the place of Samuel Barnett the defendant, Leander N. Trammell, has succeeded. This commission has prescribed rates for the transportation of freight and persons by railroad companies, in the State, which are less than the maximum of rates authorized by the 12th section of the charter of the Company. The Act imposes a penalty of not less than one or more than five thousand dollars for every violation of the rules and regulations thus prescribed. The Company and the executor of the lessee accordingly filed their bill, in the case before us, in the Superior Court of Fulton County, Georgia, against the Railroad Commissioners and the Attorney-General of the State, contending, among other things, that the charter of the Company is a contract between it and the State of Georgia, and that by it the Company has

the right to charge any rates for freight and passengers not exceeding those limited in the 12th section of its charter, and that the Act of October 14, 1879, is in conflict with the clause of the Constitution of the United States which prohibits a State from passing any Act impairing the obligation of a contract. They pray in their bill that the Act may be declared null and void, and inoperative against them, and that [177] the commission may be enjoined from prescribing rates of fare and freight over the railroad of the Company and its branches, or in any manner enforcing the provisions of the Act against them. To this bill the defendants demurred, on the ground that it disclosed no case entitling the complainants to relief in equity, and that they had an adequate and complete remedy at law. The court sustained the demurrer and dismissed the bill. On being taken to the Supreme Court of the State the decree was affirmed; and to review it the case is brought to this court by the Railroad Company.

Messrs. **Ed. Baxter** and *Jos. B. Cumming*, for plaintiff in error:

Unless an exemption is clearly established, the Legislature is free to act as the public interests may require.

Ruggles v. *Ill.* 108 U. S. 531 (27:815).

If there is a reasonable doubt, it must be resolved in favor of the existence of the power.

Stone v. *Farmers Loan & Trust Co.* 116 U. S. 325 (29: 642); *G. W. R. Co.* v. *McCarthy*, 29 Am. & Eng. R. R. Cas. 87; *Knox* v. *R. Co.* 5 S. C. 22; *Bonham* v. *C. C. & A. R. Co.* 13 S. C. 267.

The whole purpose of the statute was to fix an upward limit to railroad charges.

3 Am. & Eng. R. R. Cas. 311, 312; *Ragan* v. *Aiken*, 9 Lea, 609, 610, *Platt* v. *Union Pac. R. Co.* 99 U. S. 63, 64 (25: 429).

A carrier can, in the absence of all law, make his rates at will but the charges should be reasonable.

Munn v. *Ill.* 94 U. S. 134 (24: 87).

This rule of the common law was subject to be changed by the statute.

Chicago, B. & Q. R. Co. v. *Iowa*, 94 U. S. 161, 162 (24: 95); *Stone* v. *Loan & Trust Co.* 116 U. S. 330 (29: 644).

The maximum rates were fixed in the charter, for the express purpose of furnishing a standard by which the disputes between shippers and the companies were to be settled.

Arnold v. *Ga. R. & B. Co.* 50 Ga. 304; *Knox* v. *R. Co.*, *Bonham* v. *C. C. & A. R. Co.* and *Ragan* v. *Aiken*, *supra*.

Because the term "provided" is used in a law, it does not necessarily follow that the matter which may succeed it is a proviso in its technical sense.

Carroll v. *State*, 58 Ala. 396; Bouv. Law Dict. title, *Proviso*; 2 Rapalje & L. Law Dict. 1032; *Stanley* v. *Colt*, 72 U. S. 5 Wall. 166 (18: 509).

Mr. **Clifford Anderson**, for defendants in error:

It is not to be presumed that the right of legislative control was intended to be renounced.

Barrett v. *Stockton & D. R. Co.* 40 Eng. C. L. 298; *Chicago, B. & Q. R. Co.* v. *Iowa*, 94 U. S. 155 (24: 94); *Ruggles* v. *Ill.* 108 U. S. 526 (27: 812); *Stone* v. *Loan & Trust Co.* 116 U. S. 307, 347 (29: 636, 650).

Mr. Justice **Field** delivered the opinion of the court:

As appears from the statement of the case, the contention in the court below of the Company, the plaintiff in error here, so far as it embraced any federal question, was that the 12th section of its charter constituted a grant of a right to charge the rates therein named; that it built its road and established its business with this grant as a part of its charter; and that such a grant is a contract between it and the State of Georgia, the obligation of which cannot be impaired by its legislation; and this contention is renewed in this court.

The Constitution of Georgia, adopted in December, 1877, vested in the General Assembly of the State, the designation given to its Legislature, the power to regulate "railroad freights and passenger tariffs," so as to prevent unjust discriminations and require reasonable and just rates; and made it the duty of that body to pass laws from time to time to accomplish this end, and to prohibit, by adequate penalties, the charging of other than such rates. Art. IV. § 2, Appendix to Code of Georgia, 1882.

Pursuant to this provision of the Constitution, the Act of October 14, 1879, was passed, providing for the appointment of three railroad [178] commissioners, and authorizing them to prescribe the rates of fare which railroad companies might charge for the carriage of persons and merchandise within the limits of the State. The Act does not extend to interstate railroad transportation. Laws of Georgia, 1878-9, 125.

After authorizing the appointment of the three commissioners by the Governor, the Act declares that any railroad company doing business in the State, after its passage, which shall charge or receive more than a fair and reasonable toll or compensation for the transportation of passengers or freight of any description, or for the use or transportation of any railroad car upon its track or branches, or upon any railroad which it has the right to use, shall be deemed guilty of extortion, and upon conviction thereof shall be subject to certain penalties prescribed.

The commissioners appointed are required to make reasonable and just rates of freight and passenger tariffs to be observed by all railroad companies doing business in the State on their roads, and to provide for each of the companies a schedule of just and reasonable rates of charges for the transportation of passengers and freight; and the Act declares that in suits brought against any of the companies, involving unjust charges or discriminations, such schedule shall be taken in the courts of the State as sufficient evidence that the rates prescribed are just and reasonable.

The commissioners are required from time to time, and as often as circumstances may call for it, to change and revise the schedules; and penalties are prescribed for the enforcement of their regulations.

The supreme court of the State held, on an application for an injunction in this case, that this delegation of authority by the Legislature to the commissioners, to prescribe what shall be reasonable and just rates for the carriage

and transportation of persons and property over railroads within its limits, was a proper exercise of its own power to provide protection to its citizens against unjust rates for such transportation and to prevent unjust discriminations; and that it was expected, not that the Legislature would itself make specific regula- [179] tions as to what should in each case be a proper charge, but that it would simply provide the means by which such rates should be ascertained and enforced.

It has been adjudged by this court in numerous instances that the Legislature of a State has the power to prescribe the charges of a railroad company for the carriage of persons and merchandise within its limits, in the absence of any provision in the charter of the company constituting a contract vesting in it authority over those matters, subject to the limitation that the carriage is not required without reward, or upon conditions amounting to the taking of property for public use without just compensation; and that what is done does not amount to a regulation of foreign or interstate commerce. *Stone* v. *Farmers Loan & Trust Co.* 116 U. S. 307, 325 331 [29: 636, 642, 644]; *Dow* v. *Beidelman*, 125 U. S. 680 [31: 841]. The incorporation of the company, by which numerous parties are permitted to act as a single body for the purposes of its creation, or, as *Chief Justice* Marshall expresses it, by which "the character and properties of individuality" are bestowed on a collective and changing body of men (*Providence Bank* v. *Billings*, 29 U. S. 4 Pet. 514, 562 [7: 939, 956); the grant to it of special privileges to carry out the object of its incorporation, particularly the authority to exercise the State's right of eminent domain that it may appropriate needed property—a right which can be exercised only for public purposes;—and the obligation, assumed by the acceptance of its charter, to transport all persons and merchandise, upon like conditions and upon reasonable rates,—affect the property and employment with a public use; and where property is thus affected the business in which it is used is subject to legislative control. So long as the use continues the power of regulation remains; and the regulation may extend not merely to provisions for the security of passengers and freight against accidents, and for the convenience of the public, but also to prevent extortion by unreasonable charges, and favoritism by unjust discriminations. This is not a new doctrine, but old doctrine, always asserted whenever property or business is, by reason of special privileges received from the Government, the better to secure the purposes to which the property is dedicated [180] or devoted, affected with a public use. There have been differences of opinion among the judges of this court in some cases as to the circumstances or conditions under which some kinds of property or business may be properly held to be thus affected, as in *Munn* v. *Illinois*, 94 U. S. 113, 126, 139, 146 [24: 77, 84, 89, 91]; but none as to the doctrine that when such use exists the business becomes subject to legislative control in all respects necessary to protect the public against danger, injustice and oppression. In almost every case which has been before this court, where the power of the State to regulate the rates of charges of railroad companies for the transportation of persons and freight within its jurisdiction has been under consideration, the question discussed has not been the original power of the State over the subject, but whether that power had not been, by stipulations of the charter, or other legislation, amounting to a contract, surrendered to the company, or been in some manner qualified. It is only upon the latter point that there have been differences of opinion.

The question then arises whether there is in in the 12th section of the charter of the plaintiff in error a contract that it may make any charges within the limits there designated. The first clause would seem to have been framed upon the theory, which obtained very generally at the date of the charter, that a railroad was subject, like an ordinary wagon road, to the use of all persons who were able to place the necessary conveyances upon it. It was then generally supposed that whilst the company constructing the road was the owner of the roadbed, any one could run cars upon it upon payment of established tolls and following the regulations prescribed for the management of trains; and some charters granted at that period contained schedules of charges for such use. But this notion has long since been abandoned as impracticable. *Lake Superior & Miss. R. Co.* v. *U. S.* 93 U. S. 442, 446-449 [23: 965, 968, 969]. The section grants to the Company the exclusive right of transportation of persons and merchandise over its road, a right which in another part of the Act is limited to thirty-six years, and then expires unless renewed by the Legislature upon such terms as may be prescribed by law and accepted by the [181] Company. This period has long since expired, and we are not informed that any renewal of the privilege has been made.

The difficulty attending the construction of the clause following this one arises from the doubt attached to the meaning of the term "provided." The general purpose of a proviso, as is well known, is to except the clause covered by it from the general provisions of a statute, or from some provisions of it, or to qualify the operation of the statute in some particular. But it is often used in other senses. It is a common practice in legislative proceedings, on the consideration of bills, for parties desirous of securing amendments to them, to precede their proposed amendments with the term "provided," so as to declare that, notwithstanding existing provisions, the one thus expressed is to prevail, thus having no greater signification than would be attached to the conjunction "but" or "and" in the same place, and simply serving to separate or distinguish the different paragraphs or sentences. Several illustrations are given by counsel of the use of the term in this sense, showing, in such cases, where an amendment has been made, though the provision following often has no relation to what precedes it.

It does not matter, in the present case, whether the term be construed as imposing a condition on the preceding exclusive grant to the Company of the privilege of transporting passengers and merchandise over its own roads, or be considered merely as a conjunction to an independent paragraph, declaring a limitation upon the charges which the Company may

make. If considered as a condition to the enjoyment of the exclusive right designated, then the section only provides that, so long as the maximum of rates specified is not exceeded, the Company or its lessee shall have the exclusive right to carry passengers and merchandise over its roads. It contains no stipulation, nor is any implied, as to any future action of the Legislature. If the exclusive right remain undisturbed, there can be no just ground of complaint that other limitations than those expressed are placed upon the charges authorized. It would require much clearer language than
[182] this to justify us in holding that, notwithstanding any altered conditions of the country in the future, the Legislature had, in 1833, contracted that the Company might, for all time, charge rates for transportation of persons and property over its line up to the limits there designated.

It is conceded that a railroad corporation is a private corporation, though its uses are public, and that a contract embodied in terms in its provisions, or necessarily implied by them, is within the constitutional clause prohibiting legislation impairing the obligation of contracts. If the charter in this way provides that the charges, which the company may make for its services in the transportation of persons and property, shall be subject only to its own control up to the limit designated, exemption from legislative interference within that limit will be maintained. But to effect this result, the exemption must appear by such clear and and unmistakable language that it cannot be reasonably construed consistently with the reservation of the power by the State. There is no such language in the present case. The contention of the plaintiff in error therefore fails, and *the judgment must be affirmed.*

---

[135] J. H. W. CULLIFORD ET AL., Copartners, etc., ET AL., *Appts.*,

v.

JOHN B. VINET, Admr. of A. J. GOMILA, Deceased ET AL.

(See S. C. Reporter's ed., "*Culliford* v. *Gomila*," 135-158.)

Charter party, construction of—time of loading —unreasonable delay—stipulations.

1. Where a charter-party contains a provision that the vessel is guaranteed to carry not less than 10,000 quarters of 480 pounds of grain, but contains no provision as to the time when the loading of the grain shall commence, or be completed, or when the grain shall be shipped, the charterers have no right to cancel the charter party if the vessel is not ready to load by a certain day so as to enable them to comply with their contract with another party.

2. Where, on loading the vessel, it was ascertained that she could take no more than 9635 quarters, as she was then stowed, and the agents of the vessel notified the charterers that they would take out coal and make room for the balance of the cargo and that the vessel would be ready by a day specified, but the charterers refused this proposal and sold the cargo,—*held*, that they did this wrongfully.

3. *Held*, under the circumstances, and as there was no day specified in the charter party for the commencement or completion of the loading and no canceling date named in the charter-party, that there was no unreasonable delay in the action of the owners of the vessel or their agents.

4. The court is bound to give effect to the stipulations of the contract in a charter party but not to provisions which the parties deliberately omitted to insert after attention had been directed to them.

[No. 33.]

Argued Oct. 18, 19, 1888. Decided Oct. 29, 1888.

APPEAL from a decree of the Circuit Court of the United States for the Eastern District of Louisiana, in favor of appellees for damages for breach of a charter-party. *Reversed.*

The case is stated in the opinion.

Messrs. **J. R. Beckwith** and *J. McConnell*, for appellants:

Parties to actions on charter-party contracts must be the contracting parties named in the contract.

2 Chitty, Pl. 11th Am. ed. 221, note; Abbott, Ship. 5th ed. 165; 1 Camp. 532; 4 Taunt. 4, 52; *Splidt* v. *Bowles*, 10 East, 279; *Moores* v. *Hopper*, 2 Bos. & P. N. R. 411; *Morrison* v. *Parsons*, 2 Taunt. 407, 414; *Major* v. *White*, 7 Carr. & P. 41; *Robson* v. *Drummond*, 2 Barn. & Ad. 303; *Humble* v. *Hunter*, 12 Ad. & El. N. S. 310.

To make time the essence of a contract, it must appear from the contract itself that the parties really intended to make such time a real element and consideration of their agreement.

Barnard v. *Lee*, 97 Mass. 92; *Seton* v. *Slade*, 7 Ves. 265; *Hepburn* v. *Dunlop*, 14 U. S. 1 Wheat. 196 (4:70); *Brashier* v. *Gratz*, 19 U. S. 6 Wheat. 533 (5:324); *Taylor* v. *Longworth*, 39 U. S. 14 Pet. 174 (10:406); *Fuller* v. *Hovey*, 2 Allen, 324; *Goldsmith* v. *Guild*, 10 Allen, 241; *Kirchoff* v. *Voss*, 67 Tex. 320; *Watson* v. *Walker*, Id. 651.

Where no specific time for loading is named in the charter-party, reasonable time is the true construction.

Adams v. *Royal Mail Steam Packet Co.* 5 C. B. N. S. 492; *Harris* v. *Dreesman*, 23 L. J. Exch. 210; Chitty, Cont. 433.

Evidence of prior correspondence, conversations or negotiations is inadmissible to alter or import a new obligation or covenant into a written contract.

Cockburn v. *Alexander*, 6 Man., G. & S. 791; *Shore* v. *Wilson*, 5 Scott, N. R. 958; *Smith* v. *Jeffryes*, 15 Mees. & W. 561; *Ford* v. *Yates*, 2 Scott, N. R. 645; *Lewis* v. *Marshall*, 7 Man. & G. 729; *Phillipps* v. *Briard*, 25 L. J. Exch. 233; *Hudson* v. *Clementson*, 18 C. B. 213; *Sotilichos* v. *Kemp*, 18 L. J. Exch. 36; *S. C.* 8 Exch. 105; *Sinclair* v. *Stevenson*, 2 Bing. 514; *Farquharson* v. *Barstow*, 4 Bligh, N. R. 560; *Bromley* v. *Johnson*, 10 Week. Rep. 303; *Emery* v. *Parry*, 17 L. T. N. S. 152; *Angell* v. *Duke*, 32 L. T. N. S. 320.

The same rule obtains in the United States and except in case of fraud, accident and mis take, is the same in equity.

Brawley v. *U. S.* 96 U. S. 168 (24:622); *Willard* v. *Tayloe*, 75 U. S. 8 Wall. 557 (19:501); *Forsythe* v. *Kimball*, 91 U. S. 291 (23:352); *The Delaware*, 81 U. S. 14 Wall. 579 (20:779); *Bliven* v. *New Eng. Screw Co.* 64 U. S. 23 How. 420 (16:510); *Oelricks* v. *Ford*, 64 U. S. 23 How. 49 (16:534); *Grace* v. *Am. Cent. Ins. Co.* 109 U. S. 278 (27:982); *Bank of U. S.* v. *Dunn*, 31 U. S. 6 Pet. 51 (8:316); *Phila. W. & B. R. Co.* v. *Howard*, 54 U. S. 13 How. 337 (14:170); *Specht* v. *Howard*, 83 U. S. 16 Wall. 564 (21:348); *Brown* v. *Wiley*, 61 U. S. 20 How. 442 (15:965); *Brown* v. *Spofford*, 95 U. S. 474 (24:508); *Martin* v. *Cole*, 104 U. S. 30 (26:647); *Renard* v. *Sampson*, 12 N. Y. 561; *Bedford* v. *Flowers*, 11 Humph.

242; *Warren Academy* v. *Starrett*, 15 Maine, 443; *Goodloe* v. *Hart*, 2 La. 447; *Adams* v. *Gaynard*, 5 N. S. (La.) 249; *D'Aquin* v. *Barbour*, 4 La. Ann. 441; *Ripley* v. *Paige*, 12 Vt. 353; *Cook* v. *Parkarson*, 16 La. 129; *Arnous* v. *Davern*, 18 La. 43; *Labauve* v. *Declouet*, 19 La. 381; *Boody* v. *McKenney*, 23 Maine, 517; *Jarvis* v. *Palmer*, 11 Paige, 650; *Renshaw* v. *Gans*, 7 Pa. 117; *Ellmaker* v. *Franklin Fire Ins. Co.* 5 Pa. 183; *Whitney* v. *Lowell*, 33 Maine, 318; *Smith* v. *McCall*, 1 McCord, 220; *Airey* v. *Brig Ann C. Pratt*, 1 Curt. C. C. 395; *Perrine* v. *Cheeseman*, 11 N. J. Law, 174; *Hanson* v. *Stetson*, 5 Pick. 506; *Pierson* v. *Hooker*, 3 Johns. 68; *Bradley* v. *Anderson*, 5 Vt. 152; *Coon* v. *Knap*, 8 N. Y. 402; *Gardner* v. *Chace*, 2 R. I. 112; *Ewer* v. *Washington Ins. Co.* 16 Pick. 502; *Driscoll* v. *Fiske*, 21 Pick. 503; *Keller* v. *Webb*, 126 Mass. 393; *Black* v. *Bachelder*, 120 Mass. 171; *Lewis* v. *Thatcher*, 15 Mass. 431; *Lee* v. *Howard Fire Ins. Co.* 3 Gray, 583; *Conner* v. *Clark*, 12 Cal. 168.

The stevedore is the agent of the shipper and charterer where the shipper or charterer has the appointment.

Blaikie v. *Stembridge*, 6 C. B. N. S. 894; *Swainston* v. *Garrick*, 2 L. J. Exch. 255.

The fact that the stevedore is paid by the master does not make him the agent of owner or ship.

Quarman v. *Burnett*, 6 Mees. & W. 499; *Major* v. *White*, 7 Carr. & P. 41; *The Catharine Chalmers*, 32 L. T. N. S. 847.

The vendee cannot be put in default until the vendor complies with his part of the agreement.

Provosty v. *Putnam*, 19 La. Ann. 84; *Wilbor* v. *M'Gillicuddy*, 3 La. 382; *Brashear* v. *M'Masters*, 15 La. 282; *Rucker* v. *Liddell*, 5 La. Ann. 577; *Dawson* v. *Duplantier*, 15 La. 289.

The damages, at the time of the default, are the only damages that can be recovered.

Vance v. *Tourne*, 13 La. 229; *Williams* v. *Barton*, 13 La. 410; *Gobet* v. *Municipality No. One*, 11 La. Ann. 300; *Glover* v. *McAllister*, 2 Rob. (La.) 161; *Wilkins* v. *Bassett*, 12 Rob. (La.) 28; *Arrowsmith* v. *Gordon*, 3 La. Ann. 105; *Marchesseau* v. *Chaffee*, 4 La. Ann. 25; *Dennery* v. *Bisa*, 6 La. Ann. 365; *Grant* v. *McDonogh*, 7 La. Ann. 447; *Reading* v. *Donovan*, 6 La. Ann. 491; *Thompson* v. *Howes*, 14 La. Ann. 45; *Roberts* v. *Powers*, 15 La. Ann. 187; *McClure* v. *King*, 15 La. Ann. 220; *Bohn* v. *Cleaver*, 25 La. Ann. 420; *Campbell* v. *Miltenberger*, 26 La. Ann. 72.

The measure of damages against vendors for nondelivery of goods is the difference between the price or value of the article as fixed by contract and the fair market value at the time of default. Anticipated profits are not recoverable.

Bazin v. *Liverpool & Phila. Steamship Co.* 5 Am. Law Reg. 459; *The Gold Hunter*, 1 Blatchf. & How. 300; *The Joshua Barker*, 1 Abb. Admr. 215; *The Bark Col. Ledyard*, 1 Sprague, 530; *Douglas* v. *M'Allister*, 7 U. S. 3 Cranch, 298 (2:445); *Shepherd* v. *Hampton*, 16 U. S. 3 Wheat. 200 (4:369); *Marsh* v. *McPherson*, 105 U. S. 709 (26:1189); *Brown* v. *M'Gran*, 39 U. S. 14 Pet. 479 (10:550); *Loudon* v. *Shelby Co. Tax. Dist.* 104 U. S. 771 (26:923); *Fowler* v. *Merrill*, 52 U. S. 11 How. 375 (13:736); *Swift* v. *Barnes*, 16 Pick. 196; *Bartlett* v. *Blanchard*, 13 Gray, 429; *Shaw* v. *Nudd*, 8 Pick. 9; *Essex Co.* v. *Pacific Mills*, 14 Allen, 389; *Hamer* v. *Hathaway*, 33 Cal. 117; *Douglass* v. *Kraft*, 9 Cal. 562; *Crosby* v. *Watkins*, 12 Cal. 85; *Pelberg* v. *Gorham*, 23 Cal. 349.

Messrs. **J. D. Rouse**, *Wm. Grant* and *J. Ward Gurley*, Jr., for appellees:

The suit was properly brought against the firm of Culliford & Clark.

Atkins v. *Disintegrating Co.* 85 U. S. 18 Wall. 272 (21:841).

The writ may be levied upon any property or credits of the defendants.

Manro v. *Almeida*, 23 U. S. 10 Wheat. 473 (6:369).

Out of an express contract an implied one often arises.

Work v. *Leathers*, 97 U. S. 379 (24:1012); *Ye Seng Co.* v. *Corbitt*, 7 Sawy. 375; *Stanton* v. *Richardson*, L. R. 7 C. P. 421; 3 Eng. (Moak) 314; L. R. 9 C. P. 390; 10 Eng. (Moak) 223; *Lyon* v. *Mells*, 5 East, 429; *Havelock* v. *Geddes*, 10 East, 564; *Tarrabochia* v. *Hickie*, 1 Hurl. & N. 183.

Because there was no canceling date fixed in the charter-party, respondents had not their own option as to the time when they would tender compliance with their contract, but were required to do so within a reasonable time.

Jaques v. *Millar*, L. R. 6 Ch. Div. 153; 22 Eng. (Moak) 728; *Doe* v. *Benjamin*, 9 Ad. & Ell. 644; 36 E. C. L. 228; *Dawson* v. *Duplantier*, 15 La. 289; La. C. C. art. 2050; 1 Pars. Ship. & Adm. 310, citing *Weisser* v. *Maitland*, 3 Sandf. 318, and many other cases.

The breach of warranty was complete in June, and the law gave defendants no right to repair it afterwards.

Cable v. *Leeds*, 6 La. Ann. 293; *Gould* v. *Banks*, 8 Wend. 562.

The party injured by a breach of contract is entitled to recover all his damages, including gains prevented, as well as losses sustained, provided they are certain and such as might be expected to follow the breach, if the special circumstances under which the contract is made are communicated and made known to both parties.

Messmore v. *N. Y. Shot & Lead Co.* 40 N. Y. 422; *Griffin* v. *Colver*, 16 N. Y. 489; *Starbird* v. *Barrons*, 38 N. Y. 230; *Booth* v. *Spuyten Duyvil R. M. Co.* 60 N. Y. 487; 13 Eng. Rep. 52, Moak's note (collecting all the authorities); 22 Eng. Rep. 784, note; *Deming* v. *Grand Trunk R. Co.* 48 N. H. 455 (where the leading authorities are reviewed); *Hadley* v. *Baxendale*, 9 Exch. 341; *Ye Seng Co.* v. *Corbitt*, 7 Sawy. 368; 3 Suth. Dam. 230-234; 2 Suth. Dam. 402; *Goodloe* v. *Rogers*, 9 La. Ann. 278; *Lobdell* v. *Parker*, 3 La. 332; *Rugely* v. *Goodloe*, 7 La. Ann. 294; *Ward* v. *N. Y. Cent. R. Co.* 47 N. Y. 29.

The sale was publicly made in the usual manner by a regular and licensed auctioneer, to the highest and last bidder. Such a sale has the sanction and approval of the authorities.

Sands v. *Taylor*, 5 Johns. 395; *Girard* v. *Taggart*, 5 Serg. & R. 19; *Mertens* v. *Adcock*, 4 Esp. 251; *Greenwood* v. *Cooper*, 10 La. Ann. 796; *Henderson* v. *Maid of Orleans*, 12 La. Ann. 352; *Camp* v. *Hamlin*, 55 Ga. 259; *Pollen* v. *LeRoy*, 30 N. Y. 558; *Springer* v. *Berry*, 47 Maine, 331; *Maclean* v. *Dunn*, 4 Bing. 722.

Forestier & Co. had a right to refuse acceptance of the incomplete cargo.

Lowber v. *Bangs*, 69 U. S. 2 Wall. 728 (17: 768); *Behn* v. *Burness*, 3 Best & S. 751; *S. C.* 113 E. C. L. 749; 8 L. T. 207; *Deshon* v. *Fosdick*, 1 Woods, 286; *Glaholm* v. *Hays*, 2 Man. & G. 257.

Mr. Justice **Blatchford** delivered the opinion of the court:

This is a libel in admiralty, *in personam*, filed in the District Court of the United States for the Eastern District of Louisiana, on the 9th of July, 1883, by A. J. Gomila and Learned Torrey, composing the firm of Gomila & Co., against J. H. W. Culliford and John S. Clark, composing the firm of Culliford & Clark, as owners of the steamship Deronda, a British vessel, to recover damages for the alleged breach of a charter-party entered into at New Orleans on the 19th of June, 1883, chartering that vessel to Gomila & Co. The material parts of the charter-party are as follows:

[136]

"It is this day mutually agreed between DeWolf & Hammond, as agents of the steamship Deronda, of 1,090 tons net register or thereabouts, now in New Orleans, and Mess. Gomila & Co., of New Orleans, merchants, that the said steamer shall, with all convenient speed, proceed to New Orleans, or so near thereto as she may safely get, and there, being in hull, boilers, and machinery tight, staunch and strong, classed 100 A 1, and every way fitted for the voyage, shall load as customary at such safe loading berth, always afloat, as ordered by charterers on arrival (and, if afterwards required by them to shift, they to pay the ordinary expense of towing), a full and complete cargo of wheat and/or maize and/or rye in bulk and/or ship's sacks, as customary, which is to be brought to and taken from alongside as customary, at merchants' risk and expense, at ports of loading and discharge (all lighterage required to be paid for by cargo), and at charterers' risk, not exceeding what she can reasonably carry over and above her tackle apparel, fuel, provisions, and furniture, and, being so loaded, shall therewith proceed under steam to a safe port, always afloat, in the United Kingdom or on the Continent, between Bordeaux and Hamburg, both inclusive, excluding Rouen, calling at Queenstown or Falmouth for orders, which are to be given within twelve hours of arrival or lay days to count, or so near thereunto as she may safely get, one port only to be used, and deliver the same on being paid freight, all in British sterling, as follows: Five shillings and three pence sterling per quarter of 480 pounds weight, delivered in full, if calling at Queenstown or Falmouth or ordered direct to Continent. If ordered to Continent from port of call, ten per cent. additional. If ordered to United Kingdom direct, three pence off. Charterers having option of Elsinore for orders to discharge at Copenhagen or Aarhuns, at five shillings and nine pence per quarter of 480 lbs. Steamer is guaranteed to carry not less than ten thousand quarters of 480 lbs.

[137]

* * * * * * * *

"4. Stevedore for loading said steamer to be appointed by charterers, under captain's directions, at current rates for such labor. Charterers are not to be held responsible for improper stowage.

"5. Steamer to have liberty to call at any ports for coal or other supplies.

* * * * * * * *

"13. Sixteen running days, Sundays excepted, are to be allowed the said merchants (if the steamer is not sooner dispatched) for loading and discharging, and ten days on demurrage, over and above the said lay days, at six pence sterling per gross register ton per day.

"14. Should the steamer not be ready to load at New Orleans on or before the — ——, charterers or their agents have the option of canceling this charter.

"15. Lay days to commence the day after the steamer is declared ready to receive cargo, and having been passed by the surveyor of grain vessels, and written notice given by the master to the charterers or their agents.

* * * * * * * *

"19. Penalty for nonperformance of this agreement, estimated amount of freight."

The charter-party was signed by DeWolf & Hammond, as agents of the vessel, and by Gomila & Co.

The libel alleges that, on the 28th of June, 1883, the libellants provided and furnished a cargo of 10,000 quarters, of 480 pounds each, of corn, to the vessel, for her voyage; that the loading was then commenced and proceeded with until June 30, 1883, when all further loading of cargo was stopped by official order of the marine inspector of the port, who was present at the time, and who pronounced the vessel full all over, as in fact and truth it was; that, when the loading was so stopped, and the vessel declared to have a full and complete cargo, only 82,588$\frac{8}{16}$ bushels, the equivalent of 9,635$\frac{120}{160}$ quarters, of 480 pounds each, had been loaded on the vessel, and it was in fact impossible to properly stow in her any greater quantity, and she was entirely unable to carry the 10,000 quarters, of 480 pounds each; that the respondents wholly failed to comply with the said guarantee; that, in consequence thereof, the libellants were prevented from fulfilling their contract of sale of the 10,000 quarters of corn of 480 pounds each, with special reference to which they had entered into the charter-party; that, afterwards, the libellants, in order to save loss as far as possible, offered the cargo, which was so loaded on the vessel, to the respondents, at the price at which the libellants had sold it, which offer was refused by the respondents; that, all other negotiations for a settlement failing, the libellants were obliged to have the cargo sold, for account of whom it might concern, which was done, at public auction, on the 7th of July, 1883, after notice to the respondents, through DeWolf & Hammond, and advertisement in the newspapers of New Orleans, that being in the opinion of the libellants for the best interests of all parties concerned; that the libellants had performed all their undertakings in the charter-party, but the respondents, and their agents, and the master of the vessel, had not performed the undertakings of the respondents contained in the charter-party; and that the libellants had thereby sustained damages to the amount of more than $24,559.70.

[138]

The vessel was attached on process, and the respondents appeared and answered the libel. The answer sets up that, shortly after the charter-party was signed, and before any cargo was offered to the vessel, the libellants informed DeWolf & Hammond that their interests and obligations in the charter-party had been transferred to Messrs. E. Forestier & Co.; that the charter-party was delivered back to the agents of the respondents by E. Forestier & Co., and, with the agreement of all parties, was canceled, and a new charter-party for the vessel was entered into with E. Forestier & Co., as charterers; that the vessel was loaded under such new charter-party, which, in all of its conditions, had been performed on the part of the vessel; that the vessel carried and delivered the 10,000 quarters of grain, according to the guarantee contained in the charter-party with E. Forestier & Co.; and that the libelants had sustained no loss by any act of the respondents. [139] There is also a denial of the allegations of the libel that the libelants had performed all the undertakings on their part, in the charter-party with them.

The case was tried in the district court, on proofs taken on both sides, and on the second of June, 1884, that court entered a decree in favor of the libelants for $9,360.97, with 5 per cent. interest from June 30, 1883, until paid, and costs of suit, against the respondents and against Thomas D. Miller and Emile L. Carriere, as sureties in the bond releasing the vessel from attachment. The decision of the district court is reported as *Gomila* v. *Culliford*, 20 Fed. Rep. 734. The respondents and their sureties, and also the libelants, appealed from that decree to the circuit court. Further proofs were taken in the circuit court, and that court, on the 28th of February, 1885, filed its findings of fact and conclusions of law, and rendered a decree in favor of the libelants, against the respondents, and against Miller and Carriere, as such sureties, for $23,993.76 damages, with 5 per cent interest from June 30, 1883, until paid, and costs of suit.

The material findings of fact by the circuit court were as follows:

"First. On the seventh day of June, 1883, Gomila & Co., who were large grain dealers in the port of New Orleans, entered into the following grain contract:

"'Bought from Gomila & Co., by Messrs. E. Forestier & Co., at the price of (60 cts.) sixty cents per bushel of 56 lbs., on board seller's vessel, with freight at (6s.) six shillings per quarter, and to be shipped from New Orleans during the month of June, not later than the 30th (midnight), (seller's option), a cargo of not over 12,000 and not under 10,000 quarters (480 lbs.) of No. 2 mixed corn of the standard of New Orleans inspection. Destination: Elsinore, for orders to Copenhagen or Aarhuns. Any difference in freight for account of seller; cash on delivery of documents.

"'New Orleans, June 7th, 1883.

"'GOMILA & Co.'

[140] "A similar copy was made at the same time, signed 'E. Forestier & Co.'

"Second. June 18, 1883, the steamship Deronda, of which J. H. Culliford was the sole owner, though Culliford & Clark, claimants, were the apparent owners and agents in England, and of which De Wolf & Hammond were the New Orleans agents, arrived in the port of New Orleans with a cargo of salt and fruit. Her agents in New Orleans, Messrs. De Wolf & Hammond and Gomila & Co., had opened negotiations for a charter on the 16th of June Gomila & Co., having the contract aforesaid with Forestier & Co., insisted on owner's guarantee that the Deronda would carry 10,000 quarters of 480 lbs., whereupon the following cable dispatch was sent to Hammond, of De Wolf & Hammond, who was then in Europe and in communication with the claimants:

"'JUNE 16TH.

"'To W. J. Hammond, Liverpool:

"'Deronda. Are offered 5-6, Copenhagen, Aarhuns, calling at Elsinore for orders. She must be guaranteed to carry not less than 10,000 quarters; charterers to have power of canceling charter-party if vessel is not ready to load cargo by the 25th of June.'

"To which dispatch the following reply was sent:

"'JUNE 18TH.

"'Fix Deronda, 5-6, Aarhuns; guarantee 10,000 quarters, provided captain agrees quantity; lighterage at charterer's risk and expense. Try 5-9. "'W. J. HAMMOND.'

"Third. On the 18th, De Wolf, agent, and the master called on Gomila & Co. and consulted as to whether the Deronda could carry 10,000 quarters of corn, the question relating more to space than to weight. At this consultation calculations were made by Mr. Gomila, of the firm of Gomila & Co., and the master, as to the cargo space of the steamer from her general plan, and her ability to carry 10,000 quarters of corn, both reaching the conclusion [141] that the steamer would be able to carry 10,000 quarters, and Gomila advised the master to so cable owners. A cable message was then made up by the master and De Wolf from Gomila's code book, in which the master said, 'the vessel will carry 10,000 quarters of grain if we coal at Halifax.' After the said message was prepared, Gomila gave, as his reasons for insisting on a guarantee, the aforesaid contract with Forestier & Co., which was produced and read, and Gomila stated that he had no use for any vessel that would not carry 10,000 quarters of grain; that he must have a guarantee, and feared that if the vessel would not carry that amount the consequences would be serious; that the market had declined and was still delining, and the loss would be very heavy, because the buyer would have the right to reject the cargo if the conditions were not strictly fulfilled.

"The same day the following cable message was sent by ship's agents:

"'JUNE 18TH.

"'To W. J. Hammond, Liverpool:

"'Deronda. Captain's opinion she can carry 10,000 quarters, coaling Sydney; have closed, subject to owner's approval, 5-9, calling at Elsinore for orders Copenhagen, Aarhuns, charterers' option; Cork or Falmouth for orders, 5-3, to discharge at a safe port in U. K. or Continent, Bordeaux to Hamburg. If ordered to U. K. direct, 3*d*. off. If ordered to Continent from port of call, 10 per cent additional.

"'DE WOLF & HAMMOND.'

"To which message, on June 19, De Wolf & Hammond received the following answer:

"'JUNE 19TH.

"'Fix Deronda. After hard work got Culliford, owner, accept your offer, but must exclude Rouen; cannot go there.

"'W. J. HAMMOND.'

"Fourth. On June 19 the charter-party was entered into, of which a true copy is attached [142] to the libel, except the indorsement in red ink across the face, and is made part of this finding.

"Fifth. The canceling date of said charter-party was not fixed because Gomila & Co. waived it, as the ship was in port and they had confidence in the ability and willingness of the master to get the ship ready in time.

"Sixth. On the 28th of June the ship was ready to receive cargo and the loading then commenced. No formal tender appears to have been made of the ship on that day, but the loading was commenced with the consent of all concerned. The loading was continued, with slight interruptions from rain, and until 20 minutes past three o'clock in the afternoon of the 30th of June, when the loading was stopped, and the ship was declared by the underwriters' inspector to be full all over and ready to proceed on her voyage, and the inspector gave his certificate to that effect. She then had only 9,635 quarters on board, equivalent to 82,588$\frac{3}{8}$ bushels, and could take no more with safety, as she was then loaded and stowed, although libelants had the balance of the cargo of 10,000 quarters in barges alongside, and it could have been put on board before midnight if the ship could have taken it.

"Seventh. After the loading had begun, and before it was known whether the Deronda could take the guaranteed quantity, all parties supposing that she could, Gomila & Co., as is usual in such cases, handed their copy of the charter-party to Forestier & Co. The latter, without authority from the charterers, took the copy to the ship's agent unindorsed and obtained a charter in their own name, but otherwise the same in all respects as charter to Gomila & Co., for the purpose, as they explained, of appearing to their correspondents as original parties. Gomila & Co. were advised of this by De Wolf, of De Wolf & Hammond, before the loading was finished, on June 30, but replied to him that they would not object to such a change if the vessel fulfilled the guarantee in the charter, but that if she failed they would expect the return of the papers. On this point the court finds that Gomila & Co. did not authorize the surrender of their charter and the giving of a new one to Forestier & Co., save upon the condition that the Deronda should first execute her guarantee.

[143] "Eighth. When, on the 30th of June, the steamer was loaded, as described in the sixth finding, all parties had notice at once that the steamer could not carry the quantity guaranteed; whereupon Gomila, who was about to depart for St. Louis, left the matter in the hands of Bangston, of Forestier & Co., to arrange, instructing him substantially as follows:

"'I have no doubt this matter can be arranged with the owners, and anything you do to protect me I will be satisfied with. It seems to me the best way to arrange the matter would be to telegraph to the owners that if they will take the cargo off our hands at twenty-eight one and one half pence, as agreed upon, no one will be injured and I will be satisfied; but in case they do not do this, then all that I ask is to be made whole in my contract, and you can make negotiations to that effect.'

"Forestier & Co. cabled their correspondents as follows: 'Deronda. We have shipped 9,600 quarters; reply if in order or not. What do you propose? Cable at once;' and received answer, July 2, to refuse Deronda; and De Wolf & Hammond cabled claimants as follows:

"'JUNE 30TH.

"'To Culliford & Clark, Sunderland:

"'Deronda loaded; carries 9,635 quarters; cargo sold not less than 10,000 quarters. Copenhagen, 28-3; present value 25; buyers refuse acceptance, as cargo falls short. Charterers hold ship responsible. Advise.

"'DE WOLF & HAMMOND.'

"To this last dispatch the following was sent:

"'JULY 1ST.

"'Complete swindle. Captain knows ship discharged 10,380 Bordeaux. Compromise; pay value grain.

"'CULLIFORD & CLARK.'

"'JULY 3D.

"'To Culliford & Clark, Sunderland:

"'Cargo on board, 2,065 tons maize, 170 tons coal; surveyors refuse load deeper; ship full all over; no advantage Newport; cargo sold, June loading; shippers can sell Copenhagen, 25s., [144] you paying difference, or owners buy cargo 28.3 cif.; best can do. Which do you advise? Cargo maize, No. 2 mixed, sail grade, very good. May we draw on you for same?

"'DE WOLF & HAMMOND.'

"To which the following answer was made:

"'JULY 4.

"'Consult indemnity lawyer, McConnell. If he approves, dispatch Deronda; give bail, if necessary. First telegram simply means paying difference value alleged short shipment; save delay.

"'CULLIFORD & CLARK.'

"It does not appear that charterers at the time had any knowledge of these dispatches.

"Ninth. Negotiations were opened and continued between the parties with a view to compromise, but without result until July 5, on which day Forestier & Co. notified Gomila & Co. that they refused the cargo because it was short and their buyers in Copenhagen had declined to accept it. They claimed damages of Gomila & Co. for violation of the contract of sale, consisting in the loss of their commissions, amounting to $3,194.39, which Gomila & Co. paid.

"Tenth. From July 3 to July 5 Gomila & Co. telegraphed to some of the best known dealers in England and France for quotations and offers. The best offer was twenty-three shillings, ordinary terms, or twenty-four shillings, rye terms (shippers guarantee sound condition on arrival). Libelants then decided to sell the cargo on board, at the shipper's risk in the Port of New Orleans, with the privilege of the charter, and so notified Messrs. De Wolf & Hammond, at the same time giving the owners the option of taking the cargo at the price at which it had been sold to Forestier & Co.

"Eleventh. On the sixth day of July the ship's agents notified Gomila & Co. that they would take out coal and make room for the balance of the cargo, and that the ship would be made ready by the 7th. Gomila & Co. refused this proposal. In the mean time Gomila [145] & Co. had given notice, in the daily papers published in New Orleans, that the cargo would be sold at public auction, to the highest bidder, for cash, on July 7, by one of the licensed auctioneers of the city. Against this proposed sale the agents made public protest on the part of the steamer, both on July 6 and 7. The sale, however, took place as advertised, and the 9,635 quarters then on board were sold for $29,622.84 to A. Carriere & Sons, with privilege of the charter. A. Carriere & Sons afterwards sold the cargo, with privilege of charter, to J. B. Camors & Co., and the latter in turn resold to Forestier & Co. for the sum of $40,422.00. The charter to Gomila & Co. having been destroyed by De Wolf, they made protest for substitute, and then for want of such charter used copy of one issued to Forestier & Co. to make title.

"Twelfth. On July 13, the stowage of the Deronda having been in the mean time rearranged, and a large quantity of coal and water, the latter from the ballast tanks, having been taken out, the Deronda was again tendered to both Gomila & Co. and to Forestier & Co., demanding balance of cargo. This was furnished by J. B. Camors & Co., and enough more grain was taken aboard to make over 10,000 quarters, with which the ship sailed, on the 18th of July, for her original destination, and there safely arrived and delivered cargo under the substitute for charter-party provided as explained in finding 11.

* * * * *

"Fourteenth. The carrying capacity of the Deronda for grain on voyages from New Orleans to Europe, when properly fitted out, was over 10,000 quarters, and she had, on a previous voyage, with 224 tons of coal in her bunkers, safely carried a cargo of 10,258 quarters of grain, but as she was fitted out and prepared and tendered, in the manner hereinbefore found, to Gomila & Co., on June 28, 1883, she could not with safety, under maritime and underwriters' rules, carry a cargo of 10,000 quarters, and she failed to receive such cargo, as hereinbefore found. By this failure the libelants lost the advantage of their said sale to Forestier & Co.

"Fifteenth. Corn is a perishable article in shipping, both as to time and transit, and is always at risk in voyages across the ocean, particularly if it remains in the Port of New Orleans under the heat of a July sun beating on the decks, on which case the risk is increased every day it remains in port. [146]

"Sixteenth. The sale of the cargo at public auction was fairly conducted, and, under the circumstances, was necessary and proper for the protection of the rights of all parties.

"Seventeenth. By the inability and failure of the steamer to receive, when first tendered to Gomila & Co., a cargo of 10,000 quarters, they suffered loss as follows:

"1st. Amount of commission paid Forestier & Co.	$3,194 29
"2d. Loss on 9,635 quarters (82,-588 $\frac{3}{56}$ bushels) of corn, being the difference between the price of the sale to Forestier & Co. and the sale at auction to Carriere & Sons	20,549 39
"3rd. Loss on 365 quarters (3,126 bushels)	250 08
"Making a total loss to Gomila & Co., by the failure aforesaid, of twenty-three thousand nine hundred and ninety-three and $\frac{76}{100}$ dollars	$23,993 76"

The endorsement in red ink across the face of the charter-party, referred to in the fourth finding of fact, was in these words:

"JUNE 29, 1883.

"This charter-party has been canceled, and, at the request of A. J. Gomila, of Gomila & Co., similar charter-parties made out to E. Forestier & Co., and the copies of said charter-party previously given to Mess. Gomila & Co. have been returned to us by E. Forestier & Co. and destroyed. "DE WOLF & HAMMOND."

On the foregoing facts the circuit court found as follows, as conclusions of law:

"1st. That, under said charter-party, the defendants were bound, under their guaranty, to see that, when the Deronda was tendered to the [147] libelants for loading, she was fitted, prepared, and arranged so as to be able to carry not less than 10,000 quarters of grain, under underwriters' and maritime regulations.

"2d. That the said defendants were charged with full notice, in law, of the special objects and purposes of libelants in effecting said charter, and, therefore, are liable to the said libelants for the amount of damages suffered by the latter from inability to sell and deliver under the grain contract with Forestier & Co.

"3d. That the amount of such damages was the sum of $23,993.76.

"4th. That libelants should have judgment for that amount, with legal interest from June 30, 1883, against the defendants, and against the sureties on the release bond in attachment."

From the decree of the circuit court the respondents and the sureties have appealed to this court.

We are of opinion that the circuit court ought to have dismissed the libel, and that its decree must be reversed.

Negotiations for a charter of the vessel were [151] opened in New Orleans, between De Wolf & Hammond and Gomila & Co., on the 16th of June, two days before the vessel arrived. Gomila & Co. then had a contract with Forestier & Co., made on the 7th of June, whereby the former sold to the latter a cargo of not less than 10,000 quarters and not more than 12,000 quarters of 480 pounds each, of corn, at 60 cents per bushel of 56 pounds, "on board seller's vessel, with freight at (6s.) six shillings per quarter, and to be shipped from New Orleans during the month of June, not later than the 30th (midnight), (seller's option)." In such negotiations with De Wolf & Hammond, Gomila & Co. insisted on a guarantee by the owners of the vessels that she should carry 10,000 quarters of 480 pounds each. Thereupon, on the 16th of June, a cable dispatch was sent by De

Wolf & Hammond to Mr. Hammond of that firm, who was then in Europe and in communication with the respondents there, stating the terms of the offer which Gomila & Co. had made to charter the vessel, but that she must be guaranteed to carry not less than 10,000 quarters, and that it was proposed that the charterers should have the power of cancelling the charter-party if the vessel was not ready to load cargo by the 25th of June. To this dispatch Mr. Hammond replied, on the 18th of June, agreeing to the terms, and directing that the guarantee of the carriage of the 10,000 quarters should be made provided the captain should agree to the quantity, but saying nothing as to the canceling clause. In view of these dispatches and of the previous negotiations, Mr. De Wolf, of De Wolf & Hammond, and the master of the vessel, and Mr. Gomila, of Gomila & Co., had a consultation, on the 18th of June, as to whether the vessel could carry 10,000 quarters of corn. At this consultation, Gomila and the master both of them reached the conclusion that the vessel would be able to carry 10,000 quarters, and Gomila advised the master to so cable the owners. This would be a reply to Mr. Hammond's cable dispatch of June 18th, in regard to the captain's agreeing to the quantity. A cable message was then made up by the master and De Wolf, from Gomila's code-book, in which the master said, "the ves-
[152] sel will carry 10,000 quarters of grain, if we coal at Halifax." That message does not appear to have been sent, but, after it was prepared, Gomila "gave as his reasons for insisting on a guarantee," that is, a guarantee that the vessel should carry not less than 10,000 quarters, "the aforesaid contract with Forestier & Co., which was produced and read, and Gomila stated that he had no use for any vessel that would not carry 10,000 quarters of grain; that he must have a guarantee, and feared that if the vessel would not carry that amount the consequences would be serious; that the market had declined and was still declining, and the loss would be very heavy, because the buyer would have the right to reject the cargo if the conditions were not strictly fulfilled."

It is not found as a fact that Gomila, in these negotiations and consultations, insisted upon any other guarantee than the one that the vessel should carry not less than 10,000 quarters of grain, of 480 pounds. Although he produced and read his contract with Forestier & Co., he did not insist that there should be a provision or a guarantee in the charter-party that the cargo should "be shipped from New Orleans during the month of June, not later than the 30th (midnight);" nor did he insist upon any undertaking or guarantee in the charter-party that the vessel should commence her loading of the grain at any particular time, or should finish it at any particular time, or that she should coal at any particular place, or that there should be any canceling clause in the charter-party.

On the 18th of June, De Wolf & Hammond sent to Hammond, at Liverpool, a cable message stating that it was the opinion of the captain of the vessel that she could carry 10,000 quarters, coaling at Sidney, and that they had closed the charter-party according to the terms which it contains, stating those terms (but not excluding Rouen), subject to the owner's approval. To that message De Wolf & Hammond received, on the 19th of June, from Hammond an answer accepting on behalf of the respondents the offer, excluding Rouen, and the charter-party was then entered into, on the 19th of June.

It contains a provision that the "steamer is guaranteed to carry not less than ten thousand quarters of 480 lbs." It contains no provision [15
as to the time when the loading of the grain shall commence, or when it shall be completed, or when the grain shall be shipped. It contains a provision that the vessel shall "have liberty to call at any ports for coal or other supplies;" and one (article 13) that sixteen running days, Sundays excepted, are to be allowed the charterers, if the steamer shall not be sooner dispatched, for loading and discharging, and ten days on demurrage, over and above the said lay days, at six pence sterling per gross register ton per day. The net register tonnage was stated in the charter-party to be 1,090, or thereabouts. The blank in article 14, that the charterers should have the option of canceling the charter if the vessel should not be ready to load at New Orleans on or before a specified day, was not filled in, and no cancelling provision was inserted. By article 15, the lay days were to commence the day after the steamer was declared ready to receive cargo, and had been passed by the surveyor of grain vessels, and written notice had been given by the master to the charterers, that is, written notice of the readiness of the vessel to receive cargo, and of her having been passed by the surveyor of grain vessels.

It is stated, in the fifth finding of facts, that the canceling date of the charter-party, that is, some date to be filled into the blank left in article 14, "was not fixed, because Gomila & Co. waived it, as the ship was in port and they had confidence in the ability and willingness of the master to get the ship ready in time." Gomila & Co., by waiving the insertion of such date, abandoned all claim to insist upon the right to cancel the charter-party if the vessel should not be ready to load by a day specified, so as to enable them to comply with the requirement in their contract with Forestier & Co., as to the time named in that contract for the shipment of the grain. Although the contract with Forestier & Co. was produced and read in the consultation and negotiation had before the charter-party was signed, no day for the readiness of the vessel to load was specified in the charter-party, and the waiver of the canceling date, by Gomila & Co., was made in full view of the fact, that the terms of the contract with Forestier & Co. were known to De Wolf & [154
Hammond and the master of the vessel, as well as to Gomila & Co.

On the 28th of June, the loading of the vessel was commenced, with the consent of all concerned, although, as the findings state, no formal tender appears to have been made of the vessel on that day. Article 15 of the charter-party states that the sixteen running lay days are to commence after written notice is given by the master to the charterers, of the readiness of the vessel to receive cargo. It is not found that such notice was given. The loading was continued until 20 minutes past 8

o'clock on the 30th of June, when it was stopped, and the vessel was declared by the inspector for the underwriters to be full all over, and ready to proceed on her voyage, and he gave his certificate to that effect. The findings state that she then had only 9,685 quarters on board, equivalent to 82,588$\frac{3}{56}$ bushels, "and could take no more with safety, as she was then loaded and stowed, although libellants had the balance of the cargo of 10,000 quarters in barges alongside, and it could have been put on board before midnight if the ship could have taken it." After the loading had begun, and before it was known whether the vessel could take the 10,000 quarters, all parties supposing that she could, Gomila & Co., as was usual in such cases, handed their copy of the charter-party to Forestier & Co. The latter, without authority from Gomila & Co., took such copy to De Wolf & Hammond, unendorsed, and obtained a charter-party in their own name, but otherwise the same in all respects as the charter-party to Gomila & Co., for the purpose, as Forestier & Co. explained, of appearing to their correspondents in Europe to be the original parties to the charter-party. Gomila & Co. were advised of this by De Wolf, of De Wolf & Hammond, before the loading was finished, on June 30, but replied to him that they would not object to such a change if the vessel fulfilled the guarantee in the charter-party, but that if she failed to do so they would expect the return of the paper. On this point the circuit court expressly finds "that Gomila & Co. did not authorize the surrender of their charter and the giving of a new one to Forestier & Co., save upon the condition that the Deronda should [155] first execute her guarantee." Therefore, Gomila & Co. not only retained the ownership of the corn which they had laden on the vessel, but they held the respondents to a compliance with the charter, by not giving notice to De Wolf & Hammond that they, the charterers, considered the charter-party at an end by reason of the fact that, as the vessel was then loaded and stowed, she could take with safety no more than the 9,635 quarters, then on board.

It is stated in the findings that "When, on the 30th of June, the steamer was loaded, as described in the sixth finding, all parties had notice at once that the steamer could not carry the quantity guaranteed." What the word "notice" in this statement means is not entirely clear. It is not stated that De Wolf & Hammond, as agents of the vessel, gave any notice to the libelants that the vessel could not and would not carry the 10,000 quarters; nor is it found that Gomila & Co. thereafter gave any notice to the respondents, or to the agents of the vessel, that they would consider the charter-party canceled. On the contrary, under the direction of Gomila, acting through Forestier & Co. negotiations were opened to arrange the matter with the respondents. As a part of the effort to do so, Forestier & Co., by cable, endeavored to induce their correspondents in Europe to take the 9,635 quarters which had been loaded, but this was refused. As part of the negotiations, De Wolf & Hammond cabled to the respondents, on June, 30 and July 3, asking for advice, and received the answers of July 1 and July 4, before set out. It is found that it does not appear that the charterers at the time had any knowledge of the above-named dispatches. Still, both parties left the question open, and carried on negotiations with a view to a compromise, but without any result, until the 5th of July, on which day Forestier & Co. notified Gomila & Co. that they refused the cargo because it was short and their buyers in Copenhagen had declined to accept it. They claimed damages of Gomila & Co., for a violation of the contract of sale of June 7, consisting in the loss of their commissions, amounting to $3,194.29, which Gomila & Co. paid to them. From July 3 to July 5, Gomila & Co., as owning the corn laden on board of the vessel, tele- [156] graphed to some of the best known dealers in England and France for quotations and offers. This manifestly was under the view that the 9,635 quarters were to be carried by the vessel, and under the charter-party. But the best offer was a sum which they were unwilling to accept, and they then notified De Wolf & Hammond that they would sell the cargo on board of the vessel, at the shipper's risk, in the port of New Orleans, with the privilege of the charter. They thus still adhered to the charter as a subsisting charter with themselves. But, before they sold the cargo, and on the 6th of July, De Wolf & Hammond notified them (Gomila & Co.) that they (De Wolf & Hammond) would take out coal and make room for the balance of the cargo, and that the vessel would be made ready by the 7th of July. Gomila & Co. refused this proposal, and sold the cargo on the 7th of July. They did this wrongfully. Negotiations in regard to the matter had continued from and including the 30th of June, when the loading of the 9,635 quarters had been completed, to and including the fifth of July, not only with the assent of Gomila & Co., but with their active co-operation. By the 6th of July, De Wolf & Hammond had satisfied themselves that by a rearrangement of the stowage and by taking out some of the coal and water, room could be made for more cargo sufficient to make up the 10,000 quarters. Under the circumstances, and in view of the facts before stated, that there was no day specified in the charter-party for the commencement or completion of the loading, and no canceling date named in the charter-party, there was no unreasonable delay in the action of the respondents or their agents. Notwithstanding this offer on the part of the vessel, Gomila & Co., on the 7th of July, sold the 9,635 quarters on board of the vessel at public auction, with privilege of the charter, to A. Carriere & Sons, for $29,622.84, which which was not quite 36 cents per bushel. The corn afterwards came into the hands of Forestier & Co., by a repurchase, at the price of $40,422.00, which was at the rate of not quite 49 cents per bushel.

On the 13th day of July, the stowage of the vessel having been in the meantime rearranged, and a large quantity of coal and water, the [15 latter from the ballast tanks, having been taken out, she was again tendered to Gomila & Co., and to Forestier & Co., and the balance of the cargo was demanded. This was furnished by J. B. Camors & Co., and enough more corn was taken on board to make over 10,000 quarters, with which the vessel sailed

on the 18th of July for her original destination. She arrived safely and delivered her cargo.

Upon the foregoing facts we are unable to concur in the conclusions of law arrived at by the circuit court. The vessel did carry 10,000 quarters of corn, of 480 pounds. With the exception of 865 quarters, or 3,126 bushels, out of 10,000 quarters, or 85,708 bushels, this corn was the identical corn laden on board of the vessel by Gomila & Co. The only stipulation in the charter-party with Gomila & Co. which they insisted upon having inserted was, therefore, complied with, and complied with in a reasonable time, as we have seen, in the absence of all provisions in the charter-party with Gomila & Co. that the vessel should commence loading by a certain day, or complete loading by a certain day, or that the cargo should be shipped from New Orleans by a certain day; and in the absence of any written notice from the master to the libelants, as provided in the charter-party, as to the readiness of the vessel to receive cargo, in order to set running the lay days for loading; and in the absence of any notice by the libelants to De Wolf & Hammond that they considered the charter-party at an end because of a breach of the guarantee that the vessel should carry not less than 10,000 quarters of 480 pounds, prior to the giving of the notice by De Wolf & Hammond to Gomila & Co., on the 6th of July, that room would be made for the balance of the 10,000 quarters, or prior to the sale of the cargo at auction by Gomila & Co., on the 7th of July. Not before such sale on that day, with privilege of the charter, did Gomila & Co. terminate their interest under the charter; and by such action, under the circumstances, they failed to keep the charter-party on their part, while the respondents had not at that time failed to perform it on their part, and afterwards went on and performed it. If Gomila & Co. had not made the auction sale of the 7th of July, they [158] might themselves, as clearly appears, have afterwards furnished the 865 quarters, and obtained all they were entitled to under their charter-party. If they lost anything by reason of their failure to carry out their contract with Forestier & Co., it was not the fault of the respondents in failing to observe any stipulation on their part in the charter-party with Gomila & Co.; but it was due to the fact that Gomila & Co. accepted a charter-party which did not contain such provisions as to time and as to cancellation as would have enabled them to hold the respondents to the same terms, as to the time of shipping the cargo, which were provided for in the contract between Gomila & Co. and Forestier & Co. Those provisions were industriously left out of the charter-party after both of the parties who were to make it had had their attention called to the terms of the contract of sale between Gomila & Co. and Forestier & Co. That being so, Gomila & Co. cannot have the same benefit as if those provisions had been inserted. The court is bound to give effect to the stipulations of the contract, but not to provisions which the parties deliberately omitted to insert, after attention had been directed to them. This ruling is in harmony with the views laid down in *Norrington* v. *Wright*, 115 U. S. 188 [29: 366] and in *Filley* v. *Pope*, Id 213 [29: 372].

In accordance with these views, the decree of the Circuit Court is reversed, and the case is remanded to that court with a direction to enter a decree dismissing the libel, with costs to the respondents in the District Court and in the Circuit Court.

HOWARD S. LOVEJOY ET AL., *Plffs. in Err.*, [171]

v.

UNITED STATES.

(See S. C. Reporter's ed. 171-173)

Drawing of jurors—talesmen—charge to jury.

1. The Act of June 30, 1879, chap. 52, § 2 (21 Stat. at L. 43), as to drawing of jurors, does not touch the power of the court, whenever the panel of jurors is exhausted, to call in talesmen from the bystanders to supply the deficiency.

2. Said Act does not, either expressly or by implication, repeal section 804 of the Revised Statutes, by which, "when, from challenges or otherwise, there is not a petit jury to determine any civil or criminal cause, the marshal or his deputy shall, by order of the court in which such defect of jurors happens, return jurymen from the bystanders sufficient to complete the panel."

3. A court of the United States, in submitting a case to the jury, may express its opinion upon the facts; and such an opinion is not reviewable on error, so long as no rule of law is incorrectly stated and all matters of fact are ultimately submitted to the determination of the jury.

[No. 34.]

Submitted Oct. 18, 1888. Decided Nov. 5, 1888.

IN ERROR to the Circuit court of the United States for the District of Nebraska, to review a judgment upon a bond. *Affirmed.*

Statement by *Mr. Justice* **Gray:**

The original action was brought by the United States against Howard S. Lovejoy, Thomas W. Means and others upon a bond, executed by Lovejoy as principal and by the other defendants as sureties, conditioned for his faithful discharge of the duties of receiver of public moneys for the district of lands subject to sale at Niobrara in the State of Nebraska.

The sureties, in their answer, denied their execution of the bond declared on, and its validity as against them. A general replication was filed.

When the case came on for trial, the clerk called into the box seven jurors, who were upon the regular panel of jurors for the term, and who, by reason of another jury, composed of jurors belonging upon that panel, being engaged in deliberating upon another case, and of some of the regular panel having been previously excused by the court, were the only ones of the regular panel who could be called to try this case; and thereupon the court, against the objection and exception of the defendants, ordered the marshal to call in from the qualified electors of the State additional persons to serve as jurors, without having been drawn by the clerk of the court and a jury commissioner. The marshal having called in such persons ac- [172] cordingly, and both parties having exhausted their challenges, there were left in the box to try the case nine persons called in as aforesaid and only three jurors of the regular panel; and

ten of the twelve jurors in the box were residents of the City of Omaha, where the case was tried. The defendants challenged each of the jurors so called in, for the reason that they had not been drawn as provided by law, and excepted to the overruling of the challenge and to the ruling of the court directing them to be sworn to try the case.

Evidence having been introduced by both parties upon the question whether the signature of Means was genuine or forged, the court, of its own motion, instructed the jury as follows: "As to the signature of Thomas W. Means, I think you may have some difficulty in finding that it was a forgery. Of course it is not my place to express an opinion, or say whether or not I think it is genuine. All I say is that you must examine the matter carefully and fully, and weigh all the testimony that bears upon the subject; and if you can say that his signature is a forgery it is for you to do so." "It seems to me, after you take these signatures and compare them fully and examine all the testimony that seems to have any bearing on that question, that you cannot have much difficulty in coming to a correct conclusion." The defendants excepted to these instructions.

The jury returned a special verdict, finding among other things that the signature of Means, as well as those of all the other defendants, were genuine. The court rendered judgment on the verdict, and the defendants sued out this writ of error.

Mr. **John M. Thurston** for plaintiffs in error.

Mr. **Wm. A. Maury,** *Assist. Atty-Gen.*, for defendant in error:

A judge may aid the jury by explaining and commenting upon the testimony, and even giving them his opinion upon questions of fact, provided only he submits those questions to their consideration.

U. S. v. *Phila. & R. R. Co.* 123 U. S. 114 (31: 139); *Vicksburg & M. R.* v. *Putnam*, 118 U. S. 545 (30: 257); *St. Louis etc. R.* v. *Vickers*, 122 U.S. 360 (30: 1161); *Rucker* v. *Wheeler*, 127 U. S. 85 (32: 102).

The alterations (by erasures of names in the body of the bond) were entirely immaterial, and, being immaterial, did not impair the bond.

Smith v. *U. S.* 69 U. S. 2 Wall. 219 (17: 788); *Merseman* v. *Werges*, 112 U. S. 139 (28: 641); *Angle* v. *N. W. Mut. Life Ins. Co.* 92 U. S. 330 (23: 556).

Mr. Justice **Gray** delivered the opinion of the court:

The bill of exceptions presents two questions, neither of which requires extended discussion.

[173] 1. The Act of June 30, 1879, chap. 52, § 2, (21 Stat. at. L. 43), which provides that (unless the judge orders the names of jurors to be drawn from the boxes used by the state authorities) all jurors, "including those summoned during the session of the court," shall be publicly drawn from a box containing not less than three hundred names, placed therein by the clerk and a commissioner appointed for the purpose—while it expressly repeals certain sections of the Revised Statutes, respecting the selection, qualifications and oath of jurors—does not touch the power of the court, whenever, at the time of forming a jury to try a particular case, the panel of jurors previously summoned according to law is found for any reason to have been exhausted, to call in talesmen from the bystanders to supply the deficiency; and does not, either expressly or by implication, repeal section 804 of the Revised Statutes, by which, "when, from challenges or otherwise, there is not a petit jury to determine any civil or criminal cause, the marshal or his deputy shall, by order of the court in which such defect of jurors happens, return jurymen from the bystanders sufficient to complete the panel." 3 Bl. Com. 364, 365; 4 Bl. Com. 354; *U. S.* v. *Rose*, 6 Fed. Rep. 136; *Clawson* v. *U. S.* 114 U. S. 477, 487 [29: 179, 183].

2. It is established by repeated decisions that a court of the United States, in submitting a case to the jury, may at its discretion express its opinion upon the facts, and that such an opinion is not reviewable on error, so long as no rule of law is incorrectly stated and all matters of fact are ultimately submitted to the determination of the jury. The charge of the circuit court in the present case was clearly within the rule. *Rucker* v. *Wheeler*, 127 U. S. 85, 98 [32: 102, 105], and cases cited.

Judgment affirmed.

THE CRESCENT BREWING COMPANY, *Appt.*, [158]
v.
MATTHEW GOTTFRIED.

(See S. C. Reporter's ed. 158-170.)

Letters patent—infringement of—invalid claim.

1. The first claim of letters patent No. 42580, granted May 3, 1864, to J. F. T. Holbeck and Matthew Gottfried, for an "improved mode of pitching barrels" is invalid.

2. As to the second claim, there is no infringement, the defendant's apparatus having no removable conductor corresponding to the removable conductor, E, of the second claim.

[No. 35.]

Argued Oct. 19, 22, 23, 1888. Decided Nov. 5, 1888.

APPEAL from the Circuit Court of the United States for the District of Indiana, to review a decree in favor of plaintiff in a suit for infringement of letters patent. *Reversed.*

The facts are stated in the opinion.

Mr. **Robt. H. Parkinson,** for appellant:

The application of an old machine to a new use is not a patentable invention.

Bean v. *Smallwood*, 2 Story, 408; *Phillips* v. *Page*, 65 U. S. 24 How. 164 (16:639); *Sawyer* v. *Bixby*, 9 Blatch. 361; *Smith* v. *Nichols*, 88 U. S. 21 Wall. 112 (22: 566); *Roberts* v. *Ryer*, 91 U. S. 150 (23: 267); *Brown* v. *Piper*, 91 U. S. 37 (23: 200); *Morton* v. *New York Eye Infirmary*, 5 Blatchf. 116; *Hotchkiss* v. *Greenwood*, 52 U. S. 11 How. 248 (13: 683); *Moffitt* v. *Rogers*, 8 Fed. Rep. 147.

The measure of damages is the plaintiff's actual loss, and not what is made by the defendant, or what might have been made by the defendant, or what is the speculative value of the invention.

McComb v. *Brodie*, 1 Woods, 153; *Sanders* v. *Logan*, 2 Fish. 167, 170; *Cowing* v. *Rumsey*, 8 Blatch. 36; *Ransom* v. *New York*, 1 Fish. 252, 275; *N. Y.* v. *Ransom*, 64 U. S. 23 How. 487 (16: 515); *Seymour* v. *McCormick*, 57 U. S. 16 How. 480 (14: 1024); *Zane* v. *Peck*, 13 Fed. Rep. 449; *McCormick* v. *Seymour*, 3 Blatch. 209, 224; *Packet Co.* v. *Sickles*, 86 U. S. 19 Wall. 611, 617 (22: 203, 204); *Birdsall* v. *Coolidge*, 93 U. S. 64 (23: 802); Walker, Patents, 387 *et seq.*; *Buck* v. *Hermance*, 1 Blatchf. 398.

The rule which is to govern the question of damages is, to give the actual damages, not vindictive or exemplary damages.

McCormick v. *Seymour*, *Seymour* v. *McCormick*, *Sanders* v. *Logan*, *Ransom* v. *New York*, *New York* v. *Ransom*, *Birdsall* v. *Coolidge*, *Packet Co.* v. *Sickles*, and *McComb* v. *Brodie*, *supra*; *Garretson* v. *Clark*, 15 Blatch. 70; *Blake* v. *Robertson*, 94 U. S. 728 (24: 245); *Marsh* v. *Seymour*, 97 U. S. 348 (24: 963); *Black* v. *Munson*, 14. Blatch. 265.

Expense in pursuing an infringer cannot be considered in estimating damages.

Day v. *Woodworth*, 54 U. S. 13 How. 363 (14: 181); *Teese* v. *Huntingdon*, 64 U. S. 23 How. 2 (16: 479); *Philp* v. *Nock*, 84 U. S. 17 Wall. 460 (21: 679); *Parks* v. *Booth*, 102 U. S. 96 (26: 54); Walker, Patents, 398.

When the article has once paid this tribute to the franchise it becomes thereby emancipated from all liability under it.

Sickels v. *Borden*, 3 Blatch. 535; *Perrigo* v. *Spaulding*, 13 Blatch. 389; *Allis* v. *Stowell*, 16 Fed. Rep. 783; *Steam Stone Cutter Co.* v. *Windsor Mfg. Co.* 17 Blatch. 24; *Booth* v. *Seevers*, 19 Off. Gaz. 1140; *Parks* v. *Booth*, *supra*.

Messrs. Ephraim Banning and **Thomas A. Banning**, for appellee:

All the characteristics of the Gottfried-Holbeck invention must be found in the prior uses, patents, or publications, by plain statement or necessary conclusion, before such uses, patents, or publications can be held sufficient to invalidate the complainants' patent.

Parks v. *Booth*, 102 U. S. 103 (26: 57); *Bates* v. *Coe*, 98 U. S. 48 (25: 74); *Imhaeuser* v. *Buerk*, 101 U. S. 660 (25: 947); *Fermentation Co.* v. *Maus*, 122 U. S. 428 (30: 1199); *Gottfried* v. *Bartholomae*, 3 Bann. & A. 311.

Damages of a compensatory character may be allowed to a complainant in an equity suit, where it appears that the business of the infringer was so improvidently conducted that it did not yield any substantial profits.

Marsh v. *Seymour*, 97 U. S. 360 (24: 967); *Latta* v. *Shawk*, 1 Fish. 472; *Wintermute* v. *Redington*, Id. 251; *Carter* v. *Baker*, 4 Fish. 419.

The profits made by the defendants in selling the machines are proper to be given as a part of the damages.

Pitts v. *Hall*, Fish. Pat. Rep. 450; *Bell* v. *Daniels*, 1 Fish. 379; *Cowin* v. *Rumsey*, 4 Fish. 275; *Whittemore* v. *Cutter*, 1 Robb. 45; *Philp* v. *Nock*, 84 U. S. 17 Wall. 462 (21: 679); *Parker* v. *Hulme*, 1 Fish. 56; *Campbell* v. *Barclay*, 5 Biss. 180; *Burdell* v. *Denig*, 92 U. S. 719 (23: 766).

[159] *Mr. Justice* **Blatchford** delivered the opinion of the court:

This is a suit in equity, brought in March, 1881, in the Circuit Court of the United States for the District of Indiana, by Matthew Gottfried against the Crescent Brewing Company, founded on the alleged infringement by the defendant of letters patent No. 42580, granted May 3, 1864, to J. F. T. Holbeck and Matthew Gottfried, for an "improved mode of pitching barrels."

The specification, claims, and drawings of the patent are as follows:

"Be it known that we, J. F. Th. Holbeck and Matthew Gottfried, both of Chicago, County of Cook and State of Illinois, have invented a new and useful improvement in pitching barrels, etc.; and we do hereby declare that the following is a full, clear, and exact description thereof, reference being had to the accompanying drawings, making a part of this specification, in which

"Figure 1 is a longitudinal section taken in a vertical plane through the centre of the apparatus which we employ in the operation of pitching barrels, etc. Figure 2 is a horizontal section taken in the course indicated by red line *x x* in figure 1. Figures 3 and 4 are views of the tabular closing-guard which is applied to the barrels or casks in the operation of heating them. Similar letters of reference indicate corresponding parts in the several figures.

"Before filling casks with spirituous or volatile liquids, it is necessary to render the casks impervious to air, the most common and probably the cheapest method of doing which has been to flow melted pitch or other substance into the pores and joints of the casks while they are in a heated state; but the difficulties hitherto attending this process arise in consequence of a want of some economical means of heating the casks without burning or seriously charring their inside surfaces. [160]

"My invention has for its object the preparation of casks for receiving pitch or other melted substance suited to the object in view, by subjecting said casks to blasts of highly heated air by means of an apparatus which will be hereinafter described. To enable others skilled in the art to understand our invention, we will describe its construction and operation.

"In the accompanying drawings we have represented one mode of carrying our invention into effect, which consists of a furnace constructed of masonry, as represented by A, figures 1 and 2. This furnace is of a rectangular form, and has a vertical central opening, A′, through it. Near the base of the furnace is a grate, *a*, beneath which is the ash-pit, *b*, and above which is a fire-chamber, *c*, which is covered by a lid, *c′*, as shown in figure 1.

"An opening, *d*, is made through the side of furnace A, which forms an external communication with an internal chamber, A′, either below the grate or above this grate, as shown in figure 1. This opening, *d*, communicates with a fan-case, B, arranged outside of the furnace, and furnished with a series of rotary wings or fans, *e e*, which may be rotated by any convenient motive power.

"The fans *e e*, create a blast of air through the furnace-chamber A′; this air rushing through the opening *d* and through the fire which is built upon the grate *a*, is allowed to escape through the passage *d′* near the top of the furnace.

"Between this passage *d′* and the cask which

it is desired to heat I form a communication by means of a detachable pipe, E, which connects with a short pipe, E′, that is secured around the passage *d′*, as shown in figures 1 and 2.

"The removable pipe E may be made conical, as represented, so that the opening through the head of the cask D need not be very large, and this pipe is provided with a bow handle, *g*, by means of which the pipe can be removed or adjusted in place without liability of burning the hands. The contracted end of pipe E enters a short tube, *h*, which passes through and is suitably affixed to a covering plate, *i*, that is [161] used to close or partially close the opening, *j*, which is made through the head of the cask. This plate *i* should be somewhat larger than the opening through the head of the cask, and this opening should be of such form as to admit plate *j*, and to allow of this plate being adjusted, as represented in figure 1. When this plate *i* is adjusted on the inner side of the cask-head, opposite the openings therethrough, it may be confined in place by means of a key, *k*, which is passed between a flange formed on the projecting outer portion of the short pipe *h* and the head of the cask, as represented in figures 1 and 2.

and allowed to escape therefrom through an opening at the bottom of covering-plate *i*, as indicated by the arrows in figure 1.

"When the cask thus subjected has become properly heated so that the resin substance within it will readily flow into the pores and cracks or joints in the wood, the parts *i* and E are removed, the opening through the head of the cask properly closed, and the cask rolled about until the melted resin has permeated every pore and interstice in its inside surface.

"Having thus described our invention, what we claim as new and desire to secure by letters patent is

"1st. The application of heated air under blast to the interior of casks by means substantially as described, and for the purposes set forth.

"2d. The use of a removable conductor, E, in combination with a furnace and blowing apparatus, arranged and operated substantially as described.

"3d. The tube-holding plate *i*, in combination with the removable pipe E and blast furnace A, substantially as and for the purposes described."

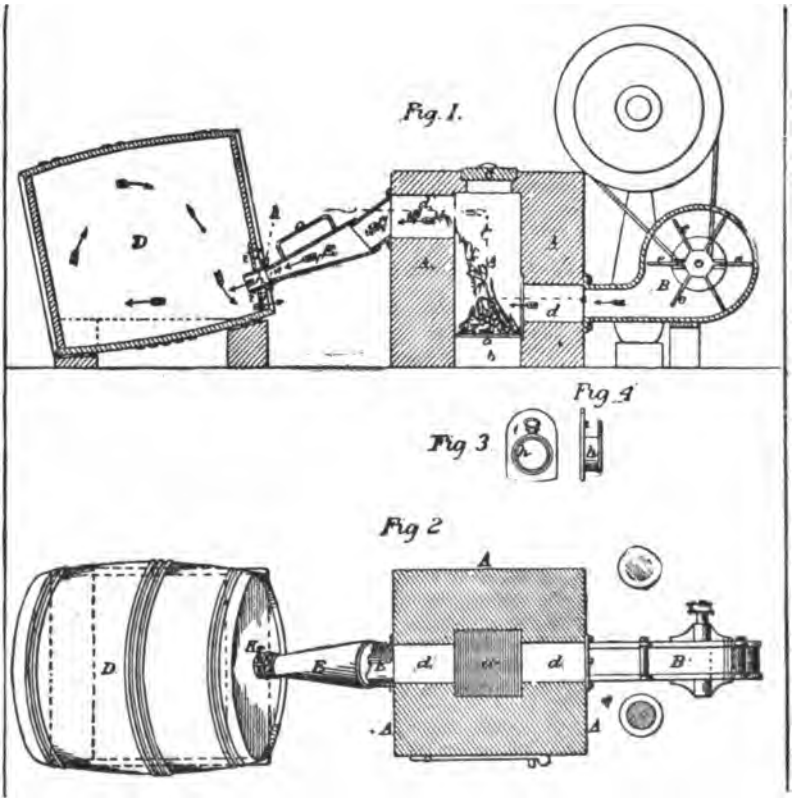

[162] "When a cask which it is desired to render impervious to air is adjusted in proper position, and a communication formed between it and the furnace A, as above described, a fire is made upon the grate *a*, and by means of the blast-fan applied to the furnace the heated products of combustion are forced into the cask

Infringement is alleged only of claims 1 and 2.

The defendants put in an answer to the bill, a replication was filed, and proofs were taken on both sides. The issue of novelty and patentability was warmly contested. The principal matters relied on in the proofs to show

want of novelty in the invention were English letters patent No. 6901, granted to C. P. Devaux, October 8, 1835; English letters patent No. 9924, granted to Davison and Symington, November 2, 1843; English letters patent No. 12918, granted to Cochrane and Slate, January 3, 1850; a description found in a volume entitled "Tomlinson's Cyclopedia of Useful Arts, London & New York, 1854," Vol. II, Ham-Zir, page 665, and figure 2015, the thing described being known as the "Pewterer's [163] Blast;" a description found in a volume published at Braunschweig, in 1854, called "Handbuch für Bierbrauer," at pages 116 to 118; the Seibel machine, first used early in 1857; and a description contained in a volume published at Leipsic, in Germany, in 1861, called "Der Bierbrauer," at page 138 *et seq.*

In January, 1882, the circuit court held by *Judge* Gresham delivered an opinion in which it was held that the bill must be dismissed, on the ground that the patent was void for want of novelty. *Gottfried* v. *Crescent Brewing Co.* 9 Fed. Rep. 762, and 22 Off. Gaz. Pat. Off. 297. The anticipations especially considered in the opinion of *Judge Gresham* were the Cochrane and Slate patent; the Seibel machine; and the "Bierbrauer" publication of 1861. A rehearing appears to have been had of the case, and, in September, 1882, *Judge* Gresham delivered an opinion (*Gottfried* v. *Crescent Brewing Co.* 18 Fed. Rep. 479), holding that he had given undue importance to the Cochrane and Slate patent, the Seibel apparatus, and the German publication, and that the patent was sustainable as a patent for mechanism. An interlocutory decree was entered, in October, 1882, holding the patent to be valid as to claims 1 and 2, and to have been infringed as to those claims, and referring it to a master to take an account of profits and damages. On the report of the master, a final decree was entered in favor of the plaintiff, in December, 1884, for a money recovery. From that decree the defendant has appealed to this court.

[165] There has been, as appears by the reports, a good deal of litigation as to this patent.

In June, 1878, in *Gottfried* v. *Bartholomae*, 3 Ban. & A. 308, in the Circuit Court of the United States for the Northern District of Illinois, *Judge* Blodgett held the patent to be valid. The only anticipating devices which appear to have been considered by him were the Davison and Symington patent of November, 1843, and the Neilson and various other hot-air blasts in smelting furnaces.

The patent was sustained by the decision of the Circuit Court of the United States for the Eastern District of Wisconsin, held by *Judge* Dyer, December 1, 1879, in *Gottfried* v. *Phillip Best Brewing Co.* 5 Ban. & A. 4, and 17 Off. Gaz. Pat. Off. 675. The anticipations considered in the opinion of *Judge* Dyer were the device of one Pierce; the Beck machine; the Davison and Symington patent; the Devaux patent; the Neilson hot-blast patent, granted in England in 1828; a patent granted in England to one Boville, in 1846; and a patent granted in England to Cochrane and Galloway, in 1818. The Cochrane and Slate patent, the "Pewterer's Blast," the two German publications, and the Seibel apparatus do not appear to have been considered in that case.

The next decision was in June, 1881 by *Judge* Blodgett in the Circuit Court of the United States for the Northern District of Illinois, in *Gottfried* v. *Conrad Seipp Brewing Co.* 10 Biss. 368, and 8 Fed. Rep. 322. The question of novelty was not considered, and the bill was dismissed on the ground of noninfringement.

Then came the decisions in the present case.

In *Gottfried* v. *Stahlman*, 13 Fed. Rep. 673, in the Circuit Court of the United States for the District of Minnesota, in October, 1882, *Judges* McCrary and Nelson concurred in the second decision of *Judge* Gresham in the present case, sustaining the validity of the patent.

It is also stated that *Judge* Baxter, of the [166] Sixth Circuit, held the patent to be valid.

It is quite apparent from the face of the specification, as it is clear upon the evidence, that the process of flowing melted pitch on the inside, into the pores and joints of casks which were to be filled with spirituous or volatile liquids, such flowing taking place while the casks were in a heated state, was not new. The specification states that a difficulty attended such process, because there was no economical means of heating the casks without burning or seriously charring their inside surfaces. It also states, that, in this view, the invention has for its object the preparation of casks for receiving the pitch, by subjecting them to blasts of highly heated air, by means of the apparatus described; that is, the invention is of the apparatus. The specification then describes it. The substance of it is an apparatus consisting of a fan-case arranged outside of a furnace, and furnished with a series of rotary wings or fans, which create a blast of air and force such blast into a chamber and through a fire built upon a grate in the chamber, and thence through such chamber and out of it, and by means of a pipe, into the cask which it is desired to heat, the heated products of combustion being thus forced into the cask and then allowed to escape therefrom, so that the cask will be properly heated to admit of the ready flow of the melted pitch into the pores and cracks or joints in the wood in the interior of the cask, when the cask is rolled about.

The first claim of the patent, namely: "The application of heated air under blast to the interior of casks by means substantially as described, and for the purposes set forth," is a claim to the means or apparatus described for applying the heated air under blast to the interior of the casks, and is a claim for mechanism, and not for a process. The evidence further shows that the process was old, and was fully developed in the Seibel apparatus. The only process that is embodied in the plaintiff's apparatus is the process of bringing the heated products of combustion, impelled by a blast of heated air rushing through the fire built upon the grate, into direct contact with the interior of the cask, and with the pitch which may cover the interior.

A Seibel apparatus, as used in St. Louis continuously from 1857, was put in evidence and [167] has been produced before this court. It is used by inserting it within the cask to be heated. It consists of an elongated furnace having a straight perforated cylindrical pipe extending horizontally the entire length along its bot-

tom, one end of the pipe connecting by a conduit with a blower on the outside, which drives a blast of air through the pipe, the blast passing out through the perforations in the pipe and into and through the fire in the furnace on the top of the pipe, whence the products of combustion pass into the cask, into contact with its interior surface, and then out of the cask.

The process of the Seibel apparatus is the same as that of the plaintiff's apparatus. The furnace and its fuel are between the blower and the interior of the cask. The heated products of combustion, being the blast of air either wholly or partially de-oxygenated, pass from the fire directly into contact with the interior of the cask. So far as any process is concerned, the processes embodied in the two apparatuses are identical. The fact that in the plaintiff's apparatus the furnace is not thrust into the cask, and that the products of combustion are conducted into the cask through a pipe, does not affect the question of the process.

It is contended by the plaintiff that the first claim of the patent is for the process when applied or operated by an apparatus like that of the plaintiff, situated outside of the cask, and not within it; and reference is made to the case of *Lawther* v. *Hamilton*, 124 U. S. 1 [31:325] as sustaining the view that the mechanical means by which a process is applied may be an essential part of the process, and that the process is not anticipated unless the mechanical means of applying it, shown by the plaintiff, existed before, and were applied before to carry on the same process. But the true view of the case of *Lawther* v. *Hamilton* is this: Lawther's patent was for a process of working oil-seeds to obtain oil, by dispensing with the muller-stones before used to complete the grinding. The omission of the muller-stones produced more oil and better oil-cake. The seed, first crushed by heavy rollers, was passed directly from them into a mixing machine, [168] without being operated upon by muller-stones, which had before been used for grinding and mixing. The crushing of the seed between powerful revolving rollers was retained in Lawther's process, and the seed was transferred immediately from them to a steam mixing machine. This court said that while the invention was that of a process, it was limited, at least so far as the crushing of the seed was concerned, to the use of powerful revolving rollers to do such crushing. The crushing being stated in the specification to be of such character that each seed was individually acted upon, and the oil cells were fully crushed and disintegrated, the claim was for "the process of crushing oleaginous seeds and extracting the oil therefrom, consisting of the following successive steps, viz.: the crushing of the seeds under pressure, the moistening of the seeds by direct subjection to steam, and finally the expression of the oil from the seed by suitable pressure, as and for the purpose set forth." The crushing of the seed in the manner stated was a part of the process. Of course it had to be done by some kind of instrumentality, and it was held to be a part of the process that the kind of instrumentality should be powerful revolving rollers, whose effect would be to act upon each seed individually, and fully crush and disintegrate the oil cells; but the instrumentality or apparatus was not a part of the process, while the operation upon each seed by the kind of instrumentality described was a part of the process.

So far, therefore, as the first claim of the patent is a claim to a process, it is fully anticipated in the process carried on by means of the Seibel apparatus.

Considering the first claim of the patent as a claim to the apparatus used for applying the heated blast to the interior of the cask, the apparatus existed before. It is found in the Cochrane and Slate patent of 1850, which shows a blast passing through the fuel in a furnace, and a pipe extending from the furnace into the interior of a flask or mould intended to be heated, through which pipe the blast, consisting of the heated products of combustion, was conveyed into such interior. The de-oxygenated blast was applied to the heating and drying of the inner walls of the receptacle into which it was carried. There was no invention [169] in applying the apparatus to a cask instead of a flask. It would require only ordinary mechanical aptitude and not invention to make the mouth of the exit pipe carrying the heated products of combustion of a proper size to enter the bung-hole or other orifice of a keg or a cask, instead of entering a flask or mould.

So, too, the description of the "Pewterer's Blast," in Tomlinson's Cyclopedia of 1854, shows the plaintiff's apparatus. It is there stated that the pewterers have a kind of blow-pipe, or hot-air blast, consisting of a common cast-iron pot with a close cover, containing ignited charcoal, and termed a hod. This pot has a nozzle leading into it, which supplies air from bellows worked by the foot, and another nozzle leading out of it, which directs the current of hot air upon the article to be soldered. The drawing of this apparatus is as follows:

Fig. 2015.

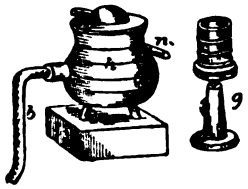

In this apparatus there is a blast driven through a fire in a closed receptacle in such manner that the heated products of combustion are carried out of a nozzle and directed where needed. Whether the nozzle terminates in the air or in the interior of a cask or keg, or whether the de-oxygenated blast which leaves the nozzle is partially re-oxygenated or not before reaching its objective point, does not affect the identity of the apparatus.

In reference to both the Cochrane and Slate patent and the "Pewterer's Blast" apparatus, the patentees have at most merely applied an old apparatus to a new use, without any change of its constituent elements or of its mode of operation. In fact, the defendant's apparatus is to all intents and purposes a faithful copy of the "Pewterer's Blast" apparatus.

Under these views, it must be held that the [170] first claim of the patent is invalid.

As to the second claim, there is no infringe-

ment, the defendant's apparatus having no removable conductor corresponding to the removable conductor E of the second claim. The defendant's pipe is screwed fast to the furnace and cannot be removed while the machine is in use. It is cast separate from the furnace, for convenience of renewal in case of the breakage of either it or the furnace. The movable conductor E is described in the specification of the patent as a pipe provided with a bow-handle, by means of which it can be removed or adjusted in place without liability of burning the hands. The defendant's pipe which enters the keg or cask is not removable or detachable in this sense.

For these reasons, the decree of the Circuit Court is reversed, and the case is remanded to that court, with a direction to dismiss the bill of complaint, with costs.

[170] RACHEL S. GAFF, EXTX. of JAMES W. GAFF, Deceased, ET AL., *Appts.*, *v.* MATTHEW GOTTFRIED [No. 36].

EUGENE HACK *et al.*, *Appts.*, *v.* MATTHEW GOTTFRIED [No. 37].

(See S. C. Reporter's ed. 170.)

Argued Oct. 19, 22, 23, 1888. Decided Nov. 5, 1888.

APPEALS from the Circuit Court of the United States for the District of Indiana, to review decrees in favor of the plaintiff in actions for infringement of letters patent. *Reversed.*

Same counsel and briefs as in preceding case.

Mr. Justice **Blatchford** delivered the opinion of the court:

These are appeals by the defendants in two suits brought by Matthew Gottfried, in the Circuit Court of the United States for the District of Indiana, upon the same patent involved in the case of *The Crescent Brewing Co.* v. *Gottfried*, just decided. The proofs are the same as in that case, and the same conclusions are reached.

The decree in each case is reversed, and each case is remanded to the Circuit Court, with a direction to dismiss the bill of complaint, with costs.

---

[182] THE LIGGETT AND MYERS TOBACCO COMPANY, *Appt.*,
v.
RUDOLPH FINZER.

(See S. C. Reporter's ed. 182-184.)

Trademark—infringement of.

In an action to restrain defendant from using a star on tobacco manufactured by him, where the priority of use by complainant extended only to a tin star and not to the design of a star generally, defendant will not be restrained from using, as a trade mark, the design of a star in combination with the word "light" meaning "star-light," the star being impressed upon paper and differing in size and color from that used by complainant.

[No. 39.]

Argued Oct. 24, 1888. Decided Nov. 5, 1888.

APPEAL from a decree of the Circuit Court of the United States for the District of Kentucky, dismissing an action to restrain the use of a trade mark. *Affirmed.*

The facts are stated in the opinion.

Mr. **R. A. Bakewell**, on brief of *Mr. Paul Bakewell*, for appellant:

Plaintiff is entitled to its preventive remedy, as his tobacco, by reason of its mark, has become known by the name of that mark.

Perry v. *Truefitt*, 6 Beav. 66; *Seixo* v. *Provezende*, L. R. 1. Ch. App. Cas. 192; *Dixon* v. *Jackson*, 5 Macpherson, 326; *Re Worthington & Co.* Cox, Man. Trade Marks (No. 655), 381; *Moses* v. *Sargood*, Id. (No. 636) 364; *Celluloid Mfg. Co.* v. *Cellonite Mfg. Co.* 32 Fed. Rep. 94; *McLean* v. *Fleming*, 96 U. S. 245 (24:828); *Croft* v. *Day*, 7 Beav. 84.

A trade mark is protected upon the theory that the person's goods are, and have become, known, so as to be distinguished from the goods of another by that mark.

Carroll v. *Ertheiler*, 1 Fed. Rep. 688; *McLean* v. *Fleming*, *supra*.

One cannot be allowed to use names, marks or *indicia* by which he may induce purchasers to believe that the goods he is selling are those of another manufacturer.

Perry v. *Truefitt*, and *Seixo* v. *Provezende*, *supra*; *Williams* v. *Johnson*, 2 Bosw. 1; *Hegeman* v. *O'Byrne*, 9 Daly, 264.

That the eye may readily detect the difference in the marks, is no ground against injunction, where the object is to protect an established name and the rival mark is likely to deceive the ear.

Browne, Trade Marks, 2d ed. § 449; *Edelsten* v. *Edelsten*, 1 DeG. J. & S. 185; *Wamsutta Mills* v. *Allen*, Cox, Man. Trade Marks (No. 660), 385; *Dixon* v. *Jackson*, 3 Sch. L. R. 188; *Harrison* v. *Taylor*, 11 Jur. 408; *Carroll* v. *Ertheiler*, 1 Fed. Rep. 688.

Where the denominating character of a trade mark is a name, another manufacturer cannot designate his goods by words or marks that will give them that name, even though he accompanies such name or mark by a different device.

McLean v. *Fleming*, and *Carroll* v. *Ertheiler*, *supra*; *Hier* v. *Abrahams*, 82 N. Y. 519.

A similarity which would be likely to mislead an ordinary unsuspecting customer, is obnoxious to the law.

Clark v. *Clark*, 25 Barb. 76.

The physical resemblance of the two marks is not the sole question for consideration.

Intentional discontinuance is abandonment of a trademark.

Browne, Trademarks, 2d ed. 534, § 690; *Blackwell* v. *Dibrell*, 14 Pat. Off. Gaz. 668.

The question as to whether defendant's mark is likely to deceive, is not dependent on proof of actual deception.

Field v. *Lewis*, Seton, 4th ed. 287; *Filley* v. *Fassett*, 44 Mo. 173.

Injunction will be granted where there is an infringement of the goodwill of complainant's business, though defendant has acted innocently and in good faith.

Dan. Ch. Pl. & Pr. 1649; *Amoskeag Mfg. Co.* v. *Spear*, 2 Sandf. 599; *McLean* v. *Fleming*, 96 U. S. 251 (24:830).

Facts admitted by the pleadings cannot be called in question by the proofs.

Daniel, Ch. Pl. & Pr. 836; *Lippincott* v. *Ridgway*, 3 Stockt. 526; *Weider* v. *Clark*, 27 Ill. 251; *Marsh* v. *Mitchell*, 11 C. E. Green, 497.

Testimony of dealers to prove that, in their judgment, the public was not likely to be deceived by the rival mark is incompetent. This is for the court on comparison of the two marks.

Cope v. *Evans*, L. R. 18 Eq. Cas. 188; *Cook* v. *Starkweather*, 13 Abb. Pr. N. S. 392.

(No counsel appeared for appellee.)

[183] *Mr. Justice* **Field** delivered the opinion of the court:

The Liggett and Myers Tobacco Company, a Corporation created under the laws of Missouri, manufactures plug tobacco at St. Louis in that State. This tobacco is put up for sale marked with a star made of tin, having five points and a round hole in the centre, and attached to the plug by prongs at its back.

The bill alleges that the complainant has for many years been extensively engaged in manufacturing this plug tobacco, and in selling the same in large quantities in St. Louis, Louisville, and throughout the United States, and that every plug has been marked with such a star; that from the care taken in its manufacture the tobacco has acquired a great reputation, and large quantities are constantly required to supply the regular demand; that by reason of the distinguishing mark of the star upon the plugs, it has become known to the trade and the public as "Star Plug Tobacco;" that the complainant was the original manufacturer of this tobacco with the design of a star affixed to the plugs; and that the defendant, knowing all this, is manufacturing and selling at Louisville, Kentucky, plug tobacco to which is affixed a round piece of gilded paper having on it a red star, under which the word "Light" is printed; and that this mark is calculated to mislead the trade and public, and induce them to purchase tobacco from the defendant as star tobacco of the complainant, to his manifest injury, all of which is contrary to equity and good conscience. He therefore prays that the defendant may be enjoined from using that star on any plug tobacco manufactured by him.

The defendant admits these several allegations, except the one asserting that the complainant was the original manufacturer of plug tobacco with a star attached to the plug; and the one asserting that the star used by him is calculated to mislead the trade and public to purchase the tobacco manufactured by him for the tobacco manufactured by the complainant.

Upon the first of these two points the testi-
[184] mony establishes the fact that the complainant was the first person to use a star made of tin and fastened upon plug tobacco as described above, but that he was not the first person to use the design of a star upon plug tobacco. The priority of use, therefore, by the complainant extended only to the tin star and not to the design of a star generally.

Upon the second of the two points there is even less ground to sustain the position of the complainant. The two stars, the one used by the complainant, and the one used by the defendant, are so different in form and surroundings, that it would not be possible for any person, not afflicted with color blindness, to mistake the one for the other. They differ in size and color. The star used by the complainant on its manufactured goods is only a little over half an inch in diameter, with a hole in the centre. The mark used by the defendant consists of a round paper label over three fourths of an inch in diameter, with a red star, and the word "Trade" on one side and the word "Mark" on the other, in gilded letters on a red background, and having beneath the star the word "Light," thus forming by the figure and the letters the word "Starlight." One star has the silvery appearance of tin foil; the other has the glare of a red and yellow gilded background. The judgment of the eye upon the two is more satisfactory than evidence from any other source as to the possibility of parties being misled so as to take one tobacco for the other; and this judgment is against any such possibility. Seeing in such case is believing; existing differences being at once perceived and remaining on the mind of the observer. There is no evidence that anyone was ever misled by the alleged resemblance between the two designs.

But in addition to the want of resemblance in the stars, the plugs to which they are respectively attached are of different size and weight. And it appears also that the name which the defendant has given to his plug tobacco is "Starlight" instead of "Star" tobacco, and is thus distinguished in name not only from other tobacco manufactured by him which he calls "Sunlight" and "Moonlight" tobacco, but also from all plug tobacco manufactured by the complainant.

Decree affirmed.

MARTIN L. BUNDY, Receiver of the HOT SPRINGS NATIONAL BANK, *Appt.*, [185

v.

WILLIAM M. COCKE.

(See S. C. Reporter's ed. 185-189.)

Assessment of shareholder of national bank—married woman—equity suit.

1. In an action to enforce an assessment against the shareholders in an insolvent national bank, brought by the receiver, the allegation in the bill that defendant, a married woman, was the owner of certain shares, is an allegation that she was the lawful owner and had capacity to become the owner of such shares.

2. Under section 4194, Digest of Statutes of Arkansas of 1874, a married woman may lawfully subscribe for or take an assignment of shares of a national bank.

3. Where the bill alleges that such married woman has property in her own right, and asks for payment of the assessment out of such separate property, and the bill of revivor asks for a relief out of assets received by her executor, the case is one of equitable cognizance.

[No. 42.]

Argued Oct. 29, 1888. Decided Nov. 12, 1888.

APPEAL from a decree of the Circuit Court of the United States for the District of Kentucky, dismissing on demurrer a bill to enforce assessment against a shareholder of a national bank. *Reversed.*

The facts are stated in the opinion.

Mr. Alex. P. Humphrey, *George M. Davis* and **John Mason Brown**, for appellant:

The action, being for a *pro rata* contribution, was properly by bill in equity.

Kennedy v. *Gibson*, 75 U. S. 8 Wall. 498 (19: 476).

To such a bill all the stockholders within the jurisdiction were proper parties defendant.

U. S. v. *Knox*, 102 U. S. 423 (26:216).

There is no rule of law forbidding a *feme covert* to become a stockholder in a national bank, or to have bank stock transferred into her own name.

Luard's Case, 1 De G. F. & J. 543; *Butler* v. *Cumpston*, L. R. 7 Eq. Cas. 16; *Matthewman's Case*, L. R. 3 Eq. Cas. 781; *Stanwood* v. *Stanwood*, 17 Mass. 59; *Winslow* v. *Crocker*, 17 Maine, 29; *Wells* v. *Tyler*, 5 Fost. (N. H.) 340.

Personal liability to contribute in case of the insolvency of the bank attaches to a *feme covert* equally with other stockholders.

Re Reciprocity Bank, 22 N. Y. 9; *Irons* v. *Mfrs. Nat. Bank*, 17 Fed. Rep. 315, 316.

A *feme covert* stockholder in a national bank is liable as any other stockholder.

Hobart v. *Johnson*, 19 Blatchf. 359; *Witters* v. *Sowles*, 35 Fed. Rep. 641; *Sayles* v. *Bates*, 2 New Eng. Rep. 633.

This action is maintainable in equity.

Kennedy v. *Gibson*, and *U. S.* v. *Knox*, *supra*.

Mr. **B. F. Buckner**, for defendant in error:

This action should have been brought at law, and a court of equity had no jurisdiction.

Kennedy v. *Gibson*, 75 U. S. 8 Wall, 505 (19: 478); *U. S.* v. *Knox*, 102 U. S. 423 (26: 216); Com. Dig. Debt, A 9; *Anon.* 6 Mod. 27; 1 Chitty, Pl. 125, and cases in notes k, l, m, Perkins' ed.; *Braithwaite* v. *Skinner*, 5 Mees. & W. 327; *Richmond* v. *Irons*, 121 U. S. 48 (30:871); *Stanton* v. *Wilkeson*, 8 Ben. 357; *Price* v. *Abbott*, 17 Fed. Rep. 508; *Bailey* v. *Sawyer*, 4 Dill. 463; *Chambers* v. *Davis*, 17 B. Mon. 533.

Mrs. Cocke, being a citizen of Kentucky, could not, while under the disability of coverture, make a valid contract of subscription. Under the law of Kentucky the incapacity of a married woman to contract is complete.

Owens v. *Snodgrass*, 6 Dana, 230; *Fulmouth Bridge Co.* v. *Tibbatts*, 16 B. Mon. 637; *Bank of Louisville* v. *Gray*, 8 Ky. Law Rep. 664; §§ 19, 20, chap. 24, Gen. Stat. 258; § 2, art. 11, chap. 52, Gen. Stat. 519; *Pugh's Case*, L. R. 13 Eq. Cas. 566; *Phillips* v. *Covington & C. Bridge Co.* 2 Met. (Ky.) 225; *Aylett* v. *Ashton*, 1 Mylne & C. 105; *Daniel* v. *Robinson*, 18 B. Mon. 306; *Stuart* v. *Wilder*, 17 B. Mon. 55; *Gatewood* v. *Bryan*, 7 Bush, 511; *Uhrig* v. *Horstman*, 8 Bush, 172; *Penn* v. *Young*, 10 Bush, 628; *Bell* v. *Kellar*, 13 B. Mon. 381; *Jarman* v. *Wilkerson*, 7 B. Mon. 293; *Bidwell* v. *Robinson*, 79 Ky. 33; *Guishaber* v. *Hairman*, 2 Bush, 321; *Hannon* v. *Madden*, 10 Bush, 666.

The Act of Congress neither gives married women the authority to subscribe for stock in national banking associations, nor to charge their separate estates in repect of the contingent liability of shareholders to the creditors of the bank.

Secs. 5133, 5151, R. S. U. S.; *Cutler* v. *Butler*, 25 N. H. 343; 2 Story, Eq. § 1401; *Hulme* v. *Tenant*, 1 Bro. Ch. 16; *Murray* v. *Barlee*, 3 Myl. & K. 209; *Field* v. *Sowle*, 4 Russ. 112; *Nurse* v. *Craig*, 2 Bos. & P. N. R. 162; *Partridge* v. *Stocker*, 36 Vt. 108; *Frary* v. *Booth*, 37 Vt. 78.

In cases of suretyship the law never implies a charge, but express words are necessary.

Yale v. *Dederer*, 18 N. Y. 265; *Willard* v. *Eastham*, 15 Gray, 328; *Dale* v. *Robinson*, 51 Vt. 20; *Hirschman* v. *Brashears*, 79 Ky. 258; *Coleman* v. *Wooley*, 10 B. Mon. 320.

Mr. Justice **Blatchford** delivered the opinion of the court:

On the 4th of February, 1885, Martin L. Bundy, Receiver of the Hot Springs National Bank of Hot Springs, in the State of Arkansas, filed his bill of complaint in the Circuit Court of the United States for the District of Kentucky, against William M. Cocke and Amanda M. Cocke, his wife, and James Flanagan and Sue Flanagan, his wife, all of the defendants being alleged in the bill to be citizens of Kentucky.

The bill alleges that on the first of March, 1884, the bank was a corporation created and organized under the National Banking Statutes, with a capital stock of $50,000, divided into 500 shares of $100 each at their par value; [186] that it had its office of discount and deposit in the City of Hot Springs, in the State of Arkansas; that it suspended the business of banking on the 27th of May, 1884; that the plaintiff was duly appointed receiver of the bank on the second of June, 1884; and that on the 25th of July, 1884, the comptroller of the currency determined that it was necessary to enforce the individual liability of the shareholders in the bank, to the amount of 50 per centum of the par value of its capital stock, "and did make an order and requisition on the stockholders and each and every one of them, equally and ratably, as the shares were held and owned by them respectively at the time said bank suspended and ceased to do business," and directed the plaintiff "as such receiver" to take the necessary legal proceedings to enforce such assessment against the shareholders in said bank, and each and every one of them.

The bill then contains the following allegation: "And your orator would further state that, on the 27th day of May, A. D. 1884, when said bank suspended and ceased to do business, Amanda M. Cocke, wife of William M. Cocke (both of whom are made defendants hereto), was the owner of one hundred shares of the capital stock thereof, of the par value of ten thousand dollars, and the same still stands in her name on the books of the said association, on which the equal and ratable assessment and requisition made by the comptroller as aforesaid is five thousand dollars, with interest thereon from the said 25th day of July, 1884; that said defendant Amanda is possessed of property in her own right amply sufficient to pay said assessment, but utterly refuses to do so."

Then follows a like allegation as to Mrs. Flanagan, as the owner of twelve shares of the stock.

The prayer of the bill is that an account be taken of the shares of stock held by each of the married women defendants, respectively, at the date of such suspension and the assessment and

requisition made by the Comptroller of the Currency thereon, and that a decree be made for the payment thereof out of the separate property held by the married women defendants in their own right, as each may be found indebted, with interest.

187] Mr. and Mrs. Cocke filed a demurrer to the bill, for want of equity and also for multifariousness. The plaintiff then amended the bill by striking out the names of Flanagan and his wife as defendants; and, in July, 1885, he filed a bill of revivor, based on the fact of the death of Mrs. Cocke in March, 1885.

The bill of revivor alleges that when Mrs. Cocke died she was a citizen of Kentucky, and was domiciled and resident therein; that she left a will whereby her husband was appointed her sole executor and her sole residuary legatee and devisee; that the will had been duly proved and recorded in the proper court in Kentucky; and that Mr. Cocke had accepted the terms of the will and taken upon himself the office of such executor. The bill prays for the revival of the suit against Mr. Cocke as devisee and legatee of his wife and as sole executor of her will, and for relief against him out of all assets received or held by him as devisee or legatee of his wife, or as executor of her will.

Mr. Cocke appeared and filed a demurrer to the bill of revivor, for want of equity. The cause was heard on the demurrer to the bill and the demurrer to the bill of revivor. The court sustained both of the demurrers, giving to the plaintiff time to amend his bill, and he declining to do so, a decree was entered dismissing it. From that decree the plaintiff has appealed.

From the opinion of the court, accompanying the record, the ground of the dismissal appears to have been that the bill was defective in not alleging that at the time Mrs. Cocke became a stockholder, she had the capacity to become a stockholder. But we think the bill is not open to this objection. It alleges that, at the time the bank suspended, Mrs. Cocke "was the owner" of the 100 shares. This is an allegation that she was then the lawful owner of those shares, and had lawfully become such owner, with the capacity to become such owner at the time she became such owner. It is consistent with this allegation, that she may have owned the shares before she married Mr. Cocke, or that, when she became such owner, if she was then the wife of Mr. Cocke, she had

188] the right to become such owner by virtue of the laws of the State of Arkansas, where the bank was located, in connection with the provisions of the statutes of the United States in regard to national banks.

Section 4194 of the Digest of the Statutes of Arkansas, published in 1874 (chap. 93, p. 756), provides as follows: "Sec. 4194. A married woman may bargain, sell, assign and transfer her separate personal property, and carry on any trade or business, and perform any labor or services on her sole and separate account; and the earnings of any married woman, from her trade, business, labor or services shall be her sole and separate property, and may be used or invested by her in her own name; and she may alone sue or be sued in the courts of this State on account of the said property, business or services." Under this provision, if it was in force at the time of the transaction, it would seem that Mrs. Cocke, when a married woman, might lawfully have either subscribed for or taken an assignment of the shares, they being shares of a national bank in Arkansas, and the transaction being, therefore, governed by the Statutes of Arkansas, unless, under special circumstances, a different rule ought to govern. *Milliken* v. *Pratt*, 125 Mass. 374.

As the bill alleges that Mrs. Cocke is possessed of property in her own right amply sufficient to pay the assessment, and as the prayer of the bill is for a decree for the payment of the amount of the assessment out of the separate property held by her in her own right, and as the bill of revivor prays for relief against Mr. Cocke out of the assets received by him as the legatee or devisee of his wife, or as executor of her will, the case is clearly one of equitable cognizance, because it does not appear that she could be sued at law, to reach her separate property. 3 Pom. Eq. Jur. § 1099.

The original bill and bill of revivor are sufficient on their faces to call upon Mr. Cocke to answer them; and when all the facts bearing upon the case are fully developed, the rights of the parties can be properly adjudicated. For that reason, we refrain from considering any of the other questions discussed at the bar.

The decree of the Circuit Court is reversed, [189]
and the case is remanded to that court, with a direction to overrule the demurrer to the original bill and the demurrer to the bill of revivor, and to take such further proceedings as may be proper and not inconsistent with this opinion.

HENRY W. JAEHNE, *Appt.* [189]
v.
PEOPLE OF THE STATE OF NEW YORK.

(See S. C. Reporter's ed. 189–194.)

Statute, when partly void—when valid—New York Penal Code.

1. A legislative Act may be valid as to some classes of cases, and void as to others.
2. A general law for the punishment of offenses, which endeavors to reach, by its retroactive operation, acts before committed, as well as to prescribe a rule of conduct for the citizen in future, is void so far as it is retrospective; but such invalidity will not affect the operation of the law in regard to the cases which are within the legislative control.
3. Section 72 of the New York Penal Code governs future cases only, committed after the Penal Code took effect.

[No. 1409.]

Argued Oct. 29, 1888. Decided Nov. 12, 1888.

APPEAL from an order of the Circuit Court of the United States for the Southern District of New York, denying appellant's petition for the writs of *habeas corpus* and *certiorari*. *Affirmed.*

Reported below, 35 Fed. Rep. 357; and see S. C. 4 Cent. Rep. 165, 103 N. Y. 182.

The facts are stated in the opinion.

Mr. **Roger M. Sherman,** for appellant:

Definition of an *ex post facto* law.

Calder v. *Bull*, 3 U. S. 3 Dall. 390 (1:650); *Ex parte Garland*, 71 U. S. 4 Wall. 391 (18: 374).

The excessive sentence is void for want of jurisdiction; and reviewable upon *habeas corpus.*

Windsor v. *McVeigh*, 93 U. S. 282, 283 (23: 917): *People, Tweed,* v. *Liscomb*, 60 N. Y. 559.

It is the right and duty of this court to review, as an original question, the effect of section 2143 of the Consolidation Act upon the body of the law. The opinion or judgment of the state courts is without authority in the review of these questions.

Butz v. *Muscatine*, 75 U. S. 8 Wall. 582 (19: 493); *Williams* v. *La.* 103 U. S. 639 (26:596); *Wright* v. *Nagle*, 101 U. S. 794 (25:923); *Ohio Life Ins. & Trust Co.* v. *Debolt*, 57 U. S. 16 How. 416 (14:997); *Douglass* v. *Pike Co.* 101 U. S. 687 (25:972); *Louisville etc. R. Co.* v. *Palmes*, 109 U. S. 256 (27:922); *Grenada Co.* v. *Brogden*, 112 U. S. 269 (28:707); *Rice* v. *R. Co.* 66 U. S. 1 Black, 360 (17:147); *Delmas* v. *Ins. Co.* 81 U. S. 14 Wall. 668 (20:760); U. S. Rev. Stat. § 721; *Pease* v. *Peck*, 59 U. S. 18 How. 595 (15:518).

In *habeas corpus* a federal court may go behind the commitment and inquire into the cause of the commitment.

Ex Parte Jenkins, 2 Wall. Jr. 521; *Ex Parte Sifford*, 5 A. L. Reg. 659; *Re Wong Yung Quy*, 2 Fed. Rep. 624; *Ex Parte McCready*, 1 Hughes, 598.

The formal division of statute is unimportant.

Harrell v. *Harrell*, 8 Fla. 46; *Ashley* v. *Harrington*, 1 D. Chip. (Vt.) 348; *Com.* v. *Goding*, 3 Met. 130; *Bryant* v. *Livermore*, 20 Minn. 313; *U. S.* v. *Freeman*, 44 U. S. 3 How. 556 (11: 724).

Several statutes that are *in pari materia* are to be construed as one statute, in explaining their meaning and intent.

1 Kent, Com. 463; *Patterson* v. *Winn*, 24 U. S. 11 Wheat. 385, 386 (6:501); *The Harriet*, 1 Story, 251; *U. S.* v. *Collier*, 3 Blatchf. 325; *Bank* v. *Collector*, 70 U. S. 3 Wall. 495 (18:207); *Va. Coupon Cases*, 114 U. S. 304 (29:197).

A later general Act does not repeal a prior local or special Act, unless the legislative intent to repeal be unequivocally expressed.

People v. *Quigg*, 59 N. Y. 83; *Re Del. & Hudson Canal Company*, 69 N. Y. 209; *Glowersville* v. *Howell*, 70 N. Y. 287; *Re Evergreens*, 47 N. Y. 216; *Re Goddard*, 94 N. Y. 544; *People* v. *Catholic Protectory*, 38 Hun, 127; 1 Cent. Rep. 820, 101 N. Y. 195; *U. S.* v. *Claflin*, 97 U. S. 546 (24:1082); *Gregory's Case*, 6 Coke, 19 b.

General legislation on a particular subject must give way to special legislation on the same subject.

State v. *Mayor*, 33 N. J. L. 61; *State* v. *Branin*, 3 Zab. 484; *People* v. *Quigg*. 59 N. Y. 88; *Rochester* v. *Barnes*, 26 Barb. 662; *Dexter & L. Plank Road Co.* v. *Allen*, 16 Barb. 15; *Werner* v. *German Sav. Bank*, 2 Daly, 406; *Com.* v. *Kimball*, 21 Pick. 375; *Re Goddard*, 16 Pick, 504; *State* v. *Stoll*, 84 U. S. 17 Wall. 425 (21:650); *Townsend* v. *Little*, 109 U. S. 504 (27:1012).

The efficacy of a law begins when it goes into operation, and not at the date of its enactment.

McLaughlin v. *Page*, 8 N. Y. S. R. 367.

Messrs. John R. Fellows and **McKenzie Semple**, for appellees.

Mr. Chief Justice **Fuller** delivered the opinion of the court: [190

This is an appeal from an order of the Circuit Court of the United States for the Southern District of New York, denying appellant's petition for the writs of *habeas corpus* and *certiorari.*

The petition alleges that petitioner was convicted in the Court of Oyer and Terminer of the City and County of New York, in May, 1886, of the crime of bribery, committed as a member of the common council of the City of New York, and was sentenced May 20, 1886, to be imprisoned in the state prison for the term of nine years and ten months, and entered upon such imprisonment May 21; that "the only authority of law for said sentence upon said conviction is a statute of the State of New York, passed July 1, 1882, and known as the 'Consolidation Act,' and especially the 2143d section thereof, by force of which the 'Penal Code,' otherwise inapplicable, is made to apply to said offense, and thereby the offense is made punishable, although committed before the 'Consolidation Act' took effect as well as when committed after, indifferently and indistinguishably, by a maximum imprisonment of ten years in state prison; whereas, before [191 that Act took effect, said offence was punishable by a maximum imprisonment in the penitentiary of two years;" that said law is *ex post facto;* and that petitioner, having served the full term of imprisonment which could lawfully be imposed, is entitled to be discharged.

The penal Code of the State of New York took effect as a law December 1, 1882, and, under its 72d section[1], the maximum punishment for the crime of bribery committed by any person who executes any of the functions of a public office was fixed at ten years imprisonment, or $5,000 fine, or both.

The City Consolidation Act was passed July 1, 1882, to take effect March 1, 1883, and by section 2143[2] it was provided that the Penal Code should have the same effect as if passed after "this Act."

By section 100 of the New York City Charter

[1]Section 72 of the Penal Code:

"A judicial officer, a person who executes any of the functions of a public office not designated in Titles VI and VII of this Code, or a person employed by or acting for the State, or for any public officer in the business of the State, who asks, receives, or agrees to receive a bribe, or any money, property, or value of any kind, or any promise or agreement therefor, upon any agreement or understanding that his vote, opinion, judgment, action, decision, or other official proceeding shall be influenced thereby, or that he will do or omit any act or proceeding, or in any way neglect or violate any official duty, is punishable by imprisonment for not more than ten years, or by a fine of not more than five thousand dollars, or both. A conviction also forfeits any office held by the offender and forever disqualifies him from holding any public office under the State."

[2]Section 2143 of the Consolidation Act:

"For the purpose of determining the effect of this Act upon other Acts, except the Penal Code, and the effect of other Acts, except the Penal Code, upon this Act, this Act is deemed to have been enacted on the first day of January, in the year eighteen hundred and eighty-two; all Acts passed after such date and the Penal Code are to have the same effect as if they were passed after this Act. This Act shall take effect on the first day of March, eighteen hundred and eighty-three. This Act may be cited as the New York City Consolidation Act of Eighteen Hundred and Eighty-two."

192] of 1873[3] (chap. 335, Laws 1873), the crime of bribery committed by a member of the common council subjected him upon conviction to imprisonment not exceeding two years, or fine, or both.

By section 58 of the Consolidation Act this section 100 of the Act of 1873 was re-enacted.

By section 725 of the Penal Code "all Acts incorporating municipal corporations, and Acts amending Acts of incorporation or charters of such corporation," were, *inter alia*, declared not to be affected by it, and recognized as continuing in force, notwithstanding the 193] Code, except so far as repealed by subsequent laws.

It is claimed that section 100 of the Act of 1873 was not repealed by the Penal Code, but was excepted from its operation by section 725, and continued in force for the four months between December 1, 1882, when the Penal Code went into operation, and March 1, 1883, when the Consolidation Act took effect, and that section 58 of the latter Act then replaced it, and was not superseded by section 72 of the Penal Code, under section 2143 of the Consolidation Act, but kept in force by section 725 of the Penal Code. Or, in other words, it is argued that section 100, being a section of the city charter, was saved from repeal by the Penal Code by section 725 of the latter, and was not repealed until by the subsequent law known as the City Consolidation Act, which took effect March 1, 1883, and was even then continued in force as section 58 of the Consolidation Act, which is identical with said section 100; and that at all events the measure of punishment from December 1, 1882, to March 1, 1883, is that prescribed by section 100 of the old charter and repeated in section 58 of the new.

And it is insisted that section 72 of the Penal Code, with the force and effect given it by section 2143 of the Consolidation Act, under the decisions of the New York Court of Appeals, is *ex post facto*, and therefore void, in that thereby the maximum punishment by imprisonment of the crime of bribery committed before as well as after the Consolidation Act went into effect was changed from two to ten years.

In *People* v. *O'Neil* [11 Cent. Rep. 885], 109 N. Y. 261, and *People* v. *Jaehne* [4 Cent. Rep. 165], 103 N. Y. 182, it was held by the court of appeals that section 100 of chapter 335 of the Act of 1873 was not within the saving clause of section 725 of the Penal Code, but, on the contrary was repealed by that Code as soon as it went into operation, December 1, 1882, and that section 58 of the Consolidation Act, which is but a transcript of said section 100, was not kept in force by said section 725, and was superseded by section 72 of the Penal Code, which latter section was prospective merely, and could only operate upon the crime of bribery committed by a member of the common council after the Penal Code took effect. [194] Accepting the conclusions of the highest court of the State of New York as to the operation of the Acts in question in substituting, under section 72, a longer term of imprisonment for that which had theretofore existed, it is clear that section 72 governed future cases only; but, even if taken in connection with all the other statutory provisions referred to, it could be construed as *also* retroactive, as it was admitted upon the argument that the crime, upon conviction of which the petitioner was sentenced to the imprisonment he is now undergoing, was charged to have been committed in 1884, long after the Penal Code and the Consolidation Act went into effect, we perceive no reason for the discharge of the prisoner upon the ground that section 72 might be held invalid in respect to a crime committed between December 1, 1882, and April 1, 1883, if drawn in question in a proper case. The rule upon this subject, which we consider applicable, is that "A legislative Act may be entirely valid as to some classes of cases and clearly void as to others. A general law for the punishment of offenses, which should endeavor to reach by its retroactive operation acts before committed, as well as to prescribe a rule of conduct for the citizen in future, would be void so far as it was retrospective; but such invalidity would not affect the operation of the law in regard to the cases which were within the legislative control." Cooley, Const. Lim. 5th ed. 215.

The order of the Circuit Court refusing the writs was right, and it is affirmed.

---

[3]Section 100 of the New York City Charter:

"Every person who shall promise, offer or give, or cause, or aid, or abet in causing to be promised, offered, or given, or furnish, or agree to furnish, in whole or in part, to any other person, to be promised, offered, or given to any member of the common council, or any officer of the corporation, or clerk, after his election or appointment as such officer, member or clerk, or before or after he shall have qualified and taken his seat, or entered upon his duty, any moneys, goods, right in action, or other property, or anything of value, or any pecuniary advantage, present or prospective, with intent to influence his vote, opinion, judgment or action on any question, matter, cause or proceedings which may be then pending, or may by law be at any time brought before him in his official or clerical capacity, shall be deemed guilty of a felony, and shall, upon conviction, be imprisoned in a penitentiary for a term not exceeding two years, or shall be fined not exceeding five thousand dollars, or both, in the discretion of the court. Every officer in this section enumerated, who shall accept any such gift or promise, or undertaking to make the same under any agreement or understanding that his vote, opinion, judgment or action shall be influenced thereby, or shall be given in any question, matter, cause or proceeding, then, or at any time pending, or which may by law be brought before him in his official capacity, shall be deemed guilty of a felony, and shall upon conviction be disqualified from holding any public office, trust, or appointment under the City of New York, and shall forfeit his office, and shall be punished by imprisonment in the penitentiary not exceeding two years, or by a fine not exceeding five thousand dollars, or both, in the discretion of the court."

[212] JOSEPH C. RIDINGS ET AL., *Admrs.* of CORNELIUS F. VOORHIES, Deceased, *Appts.*,

v.

W. K. JOHNSON, *Err.* of SAMUEL K. JOHNSON, Deceased, ET AL.

(See S. C. Reporter's ed. 212-225.)

Equity action in Louisiana—jurisdiction—appeal—effect of record of mortgage—state decisions—bill to cancel sale and establish mortgage.

1. An action for a cancellation of a sale of a plantation and its retrocession, and to establish the priority of a mortgage thereon and have the property sold under the mortgage, is an action in equity and not one at law. The fact that an action of nullity lies in such a case in Louisiana, where the action was brought, and that there are no courts of equity in that State does not vary the matter.
2. Courts of the United States do not lose any of their equity jurisdiction in those States where no courts of equity exist, but, on the contrary, are bound to administer equitable remedies in cases to which they are applicable and which are not adapted to a common-law action.
3. On an appeal to this court, in an equity suit, the whole case is before the court, and it is bound to decide the case so far as it is in a condition to be decided.
4. In Louisiana, since the Law of 1855, an unrecorded mortgage has no effect as to third persons not parties to the act of mortgage, even though they had full knowledge of it.
5. The requirement in that State, that a vendor's privilege must be recorded within the time allowed by law, in order to give it priority over a mortgage recorded before it, relates to the mortgages given by the vendee as well as mortgages given by the vendor.
6. In the law of real estate, this court follows the final decisions of the state courts.

[No. 44.]

Submitted Oct. 29, 1888. Decided Nov. 12, 1888.

APPEAL from a decree of the Circuit Court of the United States for the Eastern District of Louisiana, dismissing a bill in equity on demurrer. *Reversed.*

The facts are stated in the opinion.

Mr. **James H. Graham** for appellants:

The distinction between law and equity prevails in the modes of proceedings in the federal courts sitting in Louisiana.

La. Mut. Ins. Co. v. *Tweed*, 74 U. S. 7 Wall. 44 (19: 65); *Story* v. *Livingston*, 38 U. S. 13 Pet. 359 (10: 200); *Gaines* v. *Relf*, 40 U. S. 15 Pet. 9 (10: 642); *McCollum* v. *Eager*, 43 U. S. 2 How. 61 (11: 179); *Gaines* v. *Chew*, 43 U. S. 2 How. 619 (11: 402): *Generes* v. *Campbell*, 78 U. S. 11 Wall. 193 (20: 110).

The fact that a State has abolished in its courts the distinction between cases at law and in equity has no effect as to the remedies in the federal courts.

Bennett v. *Butterworth*, 52 U. S. 11 How. 669 (13: 859); *Thompson* v. *Cent. Ohio R. Co.* 73 U. S 6 Wall. 134 (18:765); *Wood* v. *Hennen*, 9 La. Ann. 264; *New Orleans Nat. Bank Asso.* v. *Le Breton*, 120 U. S. 765 (30: 821); *Benjamin* v. *Cavaroc*, 2 Woods, 168.

The proceeding by executory process is not a judgment, in the sense that it can serve as a basis for the plea of *res judicata*.

Harrod v. *Voorhies*, 16 La. 254; *Riley* v. *Christie*, 13 La. Ann. 256.

The proceedings by executory process were illegal, being taken without a previous liquidation of the balance due.

Pickersgill v. *Brown*, 7 La. Ann. 297; *Spiller* v. *Their Creditors*, 16 La. Ann. 292; *Ward* v. *Douglass*, 22 La. Ann. 463.

The lien of the vendor's privilege and mortgage is prior to that of the mortgages given to secure future advances, the latter being taken with notice of the former.

Smith v. *Lambeth*, 15 La. Ann. 566; *Adams* v. *Daunis*, 29 La. Ann. 315; *Patterson* v. *De la Ronde*, 75 U. S. 8 Wall. 292 (19: 415).

(No counsel appeared for appellees.)

Mr. Justice **Bradley** delivered the opinion [213] of the court:

This case comes before us in a most unsatisfactory manner. It is an appeal from a decree dismissing a bill in equity on demurrer; and the record is grossly imperfect in omitting to set forth the documents referred to in the bill, and necessary to a fair understanding of the case; there is no opinion of the court below showing the reasons of the decree, and no brief or appearance of counsel for the appellees to explain on what grounds the bill of complaint was faulty or insufficient. It is an imposition on the court thus to throw upon it the labor of finding out for itself the questions involved, and the arguments in support of the decree of dismissal. This is specially true where, as in the present case, the system of laws out of which the controversy grows is an exceptional one and unfamiliar to the great body of lawyers and judges of the country.

The leading facts of the case, as stated in the bill, are as follows: in December, 1865, the original complainant, Cornelius F. Voorhies, sold to Samuel K. Johnson, the ancestor of one of the defendants, the Experiment plantation situated in the Parish of Avoyelles, and for part of the purchase money received from Johnson his two promissory notes for $4,000 each, payable at a bank in New Orleans on the first of February, 1867 and 1868, which notes [214] were secured by special mortgage and vendor's privilege, reserved in the act of sale. This act was not recorded in the office of the recorder of the parish until April, 1872. At the maturity of the notes the time for their payment was extended to the year 1871, when payments were made amounting in the aggregate to $2,727. No other payments have ever been made.

On the 6th of February, 1868, Johnson granted to Payne, Huntington & Co. a special mortgage on the same plantation to secure future advances to the amount of $30,000, to aid in cultivating it, and gave them his four notes for $7,500 each. When Payne, Huntington & Co. took this mortgage they were fully aware of Voorhies' right of mortgage and privilege on the plantation, and in their act of mortgage dispensed with the production of a mortgage certificate. On the 15th of March, 1870, Voorhies gave Payne, Huntington & Co. another mortgage on the same plantation for $26,000, to cover $20,000, then acknowledged to be due, and $6,000 more to be thereafter advanced.

After this, Johnson dying insolvent, Payne, the other defendant, who was the head of the firm of Payne, Huntington & Co., and assignee of the mortgages and notes given to his firm, in December, 1873, sued out an ex-

ecutory process from the District Court of the Parish of Avoyelles for the full amount of the two mortgages given to the firm, namely, $50,000, and had the plantation sold, and became himself the purchaser for the sum of $20,210.33, and retained the whole amount of adjudication on account of his debt. Of these proceedings Payne gave no notice to Voorhies (who resided in Missouri and was ignorant of what was being done), and, to facilitate the proceedings, procured from Johnson's executor a written waiver of notice of demand, and notice of seisure, and time, and a consent that the sheriff proceed with the seisure and sale as if the formalities had been strictly complied with.

The sale upon the executory process was made in February, 1874, and a little over a year thereafter, in March, 1875, Voorhies filed the original bill in this case, to which the de-
[215] fendant Payne demurred. The bill was then amended by filing what is denominated in the record a supplemental bill, but which is more in the nature of an amended bill—setting forth the facts above stated with more particularity, and praying: 1, for a cancellation of the sale made by Voorhies to Johnson, and a retrocession of the plantation; 2, if this should be refused, then, for a decree of nullity of the executory proceedings and sale to Payne, and for a recovery of the amount due on the complainant's two notes, with an allowance of vendor's privilege and mortgage with priority over the mortgages given to Payne, Huntington & Co.; 3, if the decree of nullity should be refused, then, that the complainant might be decreed to be paid out of the proceeds of the adjudication to Payne, and that the latter might be condemned to pay accordingly; and 4, for general relief.

The defendants again demurred, and the demurrer was sustained and the bill dismissed. As the demurrer was a general one, we cannot know with certainty for what reason it was sustained by the court. There was a motion for rehearing; and the grounds of that motion are spread upon the record, as well as the complainant's brief, presented to the court on that occasion. These documents lead us to infer that the principal grounds of objection to the bill were: first, that the executory process had the effect of a judgment, and, being decided by a state court, could not be brought in question in a federal tribunal; second, that a proceeding to annul a sale and compel the vendee to retrocede the property should be an action at law, and not a suit in equity. The court gave the complainant leave to amend his bill by inserting a charge of fraud and a prayer for discovery, so as to give equitable jurisdiction; but this the complainant declined to do, and stood on the equity of his bill. Whereupon the following consent order was made, to wit: "On motion of the complainant and of defendants, suggesting that the former declines converting his action into one for discovery, as allowed by the decree for a new trial, it is agreed that this case be again submitted to the court on the defendants' demurrer to the jurisdiction of the court that this is not a case in
[216] equity, but one at law." Thereupon the court made a final decree dismissing the original and supplemental bills, and from that decree the present appeal was taken.

The ground on which the bill thus seems to have been finally dismissed, namely, that it exhibits a case for an action at law only, and not for a suit in equity, is untenable. The prayer for a cancellation of the original sale by Voorhies to Johnson is based on the rule of law which prevails in Louisiana with regard to commutative contracts; that is, "contracts in which what is done, given, or promised by one party, is considered as equivalent to, or a consideration for, what is done, given, or promised by the other." Civ. Code, art. 1768. The Code declares that "A resolutory condition is implied in all commutative contracts, in case either of the parties does not comply with his engagements; in this case the contract is not dissolved of right; the party complaining of a breach of the contract may either sue for its dissolution with damages, or, if the circumstances of the case permit, demand a specific performance." (C. C. art. 2046.) "The dissolving condition . . . when accomplished, operates the revocation of the obligation, placing matters in the same state as though the obligation had not existed." The creditor seeking to avail himself of it is obliged to restore what he has received. (C. C. 2045.) "If the buyer does not pay the price, the seller may sue for the dissolution of the sale." (C. C. art. 2561.) In certain cases "The judge may grant to the buyer a longer or shorter time, according to circumstances, provided such term exceed not six months." (C. C. 2562.) In order to enforce the resolutory condition there must be a judicial demand and a regular adjudication. (Hennen's Digest, art. *Obligations*, VIII. (b), and cases there cited). This resolutory condition may be waived, or such changes may have taken place that the parties cannot be put back into the same position in which they were, or the delinquent party may have had a proper excuse for want of promptness in performance; all which things are proper to be submitted to the judgment of a court. In the present case, the complainant offered by his bill to refund all the money he had received on [217]
the sale, and to give up and cancel the two unpaid notes which he still held. Now, it seems to us perfectly clear that a suit for enforcing such a condition is eminently an equitable proceeding. The inquiry necessary to be made into all the circumstances of the case with a view to the possible exercise of discretion in giving to the defendant further time, the decree of rescission itself, and the mutual accounts to be rendered by the parties for interest received on one side and fruits and profits on the other—one and all—either belong, or are suitable, to equitable modes of relief, and would be entirely unsuited to a common-law action. The fact that an action of nullity lies in such a case in Louisiana does not vary the matter. Such an action lies there because there are no courts of equity in that State; all suits are actions at law; but, in the nature of things, if full justice is to be done, some of these actions must admit of lines of inquiry, and methods of relief which, under the English system, would be proper for a suit in equity. And it is settled law that the courts of the United States do not lose any of their equitable jurisdiction in those States where no such courts exist; but, on the contrary, are bound to

administer equitable remedies in cases to which they are applicable, and which are not adapted to a common-law action. Thus, an equitable title or an equitable defense, though allowed to be set up in a state court, cannot be set up in an action at law in the same State in the federal courts, but must be made the subject of a suit in equity. *Fenn* v. *Holme*, 62 U. S. 21 How. 481 [16: 198]; *Hurt* v. *Hollingsworth*, 100 U. S. 100 [25: 569]. We have distinctly held that the equity jurisdiction and remedies conferred by the laws of the United States upon its courts cannot be limited or restrained by state legislation, and are uniform throughout the different States of the Union. *Payne* v. *Hook*, 74 U. S. 7 Wall. 425 [19: 260]. We think, therefore, that the court erred in dismissing the bill for want of jurisdiction.

There is still another ground for this conclusion. The second prayer of the bill is for nullity of the proceedings under the executory process, and for a recovery of the amount due to the complainant as holding a mortgage superior in rank to the mortgages given to Payne, [218] Huntington & Co. In other words, this is virtually a prayer to annul the sale to Payne, to decree priority in favor of complainant, and to have the property foreclosed and sold under his mortgage for the satisfaction of his debt. If not in words, this is the effect that would be given to the prayer in view of the prayer for general relief. Surely it cannot be disputed that this is a prayer for equitable relief.

Therefore, if there was nothing more in the case than the question of jurisdiction, we should be obliged to reverse the decree at once, and send the case back for further proceedings. But on an appeal in an equity suit, the whole case is before us, and we are bound to decide it so far as it is in a condition to be decided. The bill was dismissed on demurrer for want of jurisdiction. Though the court below may have erred in dismissing it on this ground, yet if we can see that there is any other ground on which it ought to be dismissed, for example, want of equity on the merits, we must affirm the decree. This makes it necessary that we should go into a further examination of the case made by the bill and supplemental bill.

As before stated, we are laboring under a great deal of embarrassment on account of the imperfect condition of the record, and the absence of any indication on the part of the defendant as to the grounds on which the bill is objected to. But we think sufficient appears to enable us to form a tolerably satisfactory conclusion.

First, let us examine the main ground of complainant's claim to relief, namely: that his vendor's privilege and mortgage is superior in right to that created by the mortgages given to Payne, Huntington & Co., and hence that he is not bound by the foreclosure of their mortgages by means of the executory process. If this ground is untenable, if he has no such superior right, the main support of his case is taken away. And, of course, we must take the case as it is made by his own showing.

Since, as we have seen, the complainant failed to have his act of sale, by which he re- [219] served the vendor's privilege and mortgage, recorded until April, 1872, more than six years after its date, and the mortgages were given to Payne, Huntington & Co. in the mean time, namely, in February, 1868, and March, 1870, they having full knowledge of his right, the question is raised, which was once much mooted in Louisiana, whether an unrecorded mortgage or conveyance has priority over a subsequent one taken by a person who has full knowledge of the first. The conflict of opinion probably arose from variations in the phraseology of different laws standing concurrently on the statute book. In 1808 the first Code was adopted, and in the section relating to the registering of mortgages, it was declared that to protect the good faith of third persons ignorant of the existence of mortgages, and to prevent fraud, conventional and judicial mortgages should be recorded, or entered in a public book kept for that purpose, within six days from their date, when made in New Orleans, and one day more for every two leagues distance therefrom; and that if such recording was made within that time, it should have effect against third persons from the date of the mortgage; but if not, the mortgage should "have effect against third persons, being *bona fide*, only from the day of such recording." Code of 1808, p. 464, art. 52. This law undoubtedly dispensed with inscription as against third persons having notice of the mortgage; for they could not be said to take in good faith a subsequent incumbrance antagonistic to the mortgage. But not long after the adoption of the Code (March 24, 1810), an Act was passed declaring that no mortgage, and no notarial act concerning immovable property, should have any effect against third persons until recorded in the office of the judge of the parish. 3 Martin, Dig. 138; 2 Moreau-Lislet, 285. This was certainly peremptory language, and, taken literally, gave no room for indulgence in favor of an unrecorded mortgage against third persons, whether they had knowledge of it or not.

Then came the Code of 1825, which repeated, in substance, the provision of the Code of 1808, declaring, in articles 3314 and 3315, that mortgages are only allowed to prejudice third persons when they have been publicly inscribed on records kept for that purpose; but that by [220] the words "third persons" are to be understood all who are not parties to the act or judgment on which the mortgage is founded, *and who have dealt with the debtor either in ignorance of the right or before its existence.* This again opened the door for indulgence. But two years later (March 20, 1827) an Act was passed relating to conveyances in New Orleans, declaring that, whether executed before a notary or by private act, they should have no effect against third persons but from the day of their being registered. 2 Lislet, 303. And in 1855 an Act was passed declaring that no notarial act concerning immovable property should have any effect against third persons until the same should have been recorded in the office of the parish recorder or register of conveyances of the parish where the property was situated; and that all sales, contracts and judgments not so recorded should be utterly null and void except between the parties thereto; and that the recording might be made at any time, but should only affect third persons from the time of the recording. (Acts of 1855, p. 335; Rev.

Stat. 1870, p. 617.) In the same direction, on the revision of the Code in 1870, the last clause of article 3315 (now 3343), which made the ignorance of third persons a factor in the requirement of registry, was omitted, and the provisions of the Act of 1855 were inserted as new articles in the Code under the numbers 2264, 2265, 2266.

Under these changing and inconstant conditions of the textual law, the Supreme Court of Louisiana for a long time, though with occasional opposition and dissent, maintained the doctrine that actual knowledge of a prior unrecorded title or mortgage is equivalent to the registry of it, or to notice resulting from such registry, so far as the person having such knowledge is concerned. The cases holding this view are collected in Hennen's Digest (ed. 1861), tit. *Registry* III. (a), (1), D. The last cases firmly adhering to this doctrine were *Swan* v. *Moore*, 14 La. Ann. 845, decided in 1859; and *Smith* v. *Lambeth*, 15 La. Ann. 566, decided in 1860. *Chief Justice* Merrick dissented in the former case, holding to the literal interpretation of the Statute of 1855 as "the last expression of the legislative will upon the subject." This court followed the Louisiana decisions in *Patterson* v. *De la Ronde*, 75 U. S. 18 Wall. 292 [19:415], decided as late as December Term, 1868.

[21]

But in 1869 the tide turned, and the Supreme Court of Louisiana came around to *Chief Justice* Merrick's view, and in the cases of *Britton & Koontz* v. *Janney*, 21 La. Ann. 204, and *Harang* v. *Plattemier*, 21 La. Ann. 426 held to the strict construction of the law, namely: that an unrecorded mortgage was void as against third persons even though they knew of such mortgage. The same ruling was made in *Rochereau* v. *Dupasseur*, 22 La. Ann. 402. In all of these cases the prior mortgages were actually recited in the subsequent ones, and yet lost their rank as against subsequent mortgages by reason of not being reinscribed in proper time. These decisions have been followed by a long series of others to the same purport. See *Levy* v. *Mentz*, 23 La. Ann. 261; *Succession of Simon*, do. 534; *Gaiennié* v. *Gaiennié*, 24 La. Ann. 79; *Rochereau* v. *Delacroix*, 26 La. Ann. 584; *Villavaso* v. *Walker*, 28 La. Ann. 775; *Adams* v. *Daunis*, 29 La. Ann. 315; *Watson* v. *Bondurant*, 30 La. Ann. 11.

We may therefore regard it as the settled jurisprudence of Louisiana that, at least from and since the passage of the Law of 1855, an unrecorded mortgage has no effect as to third persons not parties to the act of mortgage or judgment, even though they had full knowledge of it. The registry seems to be intended not merely as constructive notice, but as essential to the validity of the mortgage as to third persons.

It is interesting to know that this result coincides with the doctrine of the French jurists, deduced from the Code Napoleon, article 2134 of which declares, that "Between creditors, a mortgage, whether legal, judicial or conventional, has no rank except from its inscription by the creditor on the records of the custodian, in the form and manner prescribed by law," saving certain enumerated exceptions, not relating to the matter in hand. See Paul Pont, Privilèges & Hypothèques, arts. 727, 728.

Privileges, especially the vendor's privilege, and other privileges affecting immovable property, have undergone much the same course of legislative restriction as that imposed upon mortgages. Originally nearly all privileges, being created by the law itself, were valid and effective without any public registry. But such secret liens often produced unjust effects, and legislation has been resorted to for the purpose of avoiding this evil. The Civil Code of 1825 declared that "The vendor of an immovable or slave only preserves his privilege on the object when he has caused to be duly recorded, at the office for recording mortgages, his act of sale, in the manner directed." The lien, or privilege, of laborers, mechanics and contractors was subjected to a like restriction; and as to both kinds, it was declared that they must be recorded within six days from date, an additional day being allowed for every two leagues distance from the place where the act was passed to that where the register's office was kept; and if not recorded within the time limited, they should have no effect as a privilege, that is, should confer no preference over creditors who had acquired a mortgage in the mean time and recorded it; but would be good against third persons from the time of being recorded. Civ. Code, arts. 3238-41. This was the law in force when Voorhies sold the plantation to Johnson, and when Johnson gave his first mortgage to Payne, Huntington & Co. In August, 1868, a new Constitution was adopted in Louisiana, by the 123d article of which it was declared that the Legislature should provide for the protection of the rights of married women to their dotal and paraphernal property and for the registration of the same; but that no mortgage or privilege should thereafter affect third parties unless recorded in the parish where the property to be affected was situated; and that tacit mortgages and privileges then existing in the State should cease to have effect against third persons after the 1st of January, 1870, unless duly recorded; and that the Legislature should provide by law for the registration of all mortgages and privileges. The Legislature was not slow to obey this constitutional injunction. In September, 1868, it passed a law amending the sections of the Code recited above, and changing article 3240 so as to make the privileges referred to, namely, those of a vendor of an immovable, and of laborers and mechanics, valid against third persons, only from the time of recording; thus taking away the retroactive effect of a registry which it previously had when made within the prescribed time. In March, 1869, a further law was passed providing for the registry of the privileges of married women for their dotal and paraphernal rights, and declaring that all persons entitled to a mortgage or privilege on the property of another shall cause it to be recorded in the mortgage book of the parish; which recording, it was declared, shall have the effect of operating a mortgage or privilege on the property, but no other effect. These provisions were subsequently incorporated in the Revised Code, adopted in March, 1870, and article 3241 (now 3274) was further amended by declaring that no privilege shall confer a preference over creditors who have acquired a mortgage unless

[222]

[223]

recorded on the day the contract was entered into.

All these amendments of the law have been interpreted and administered by the courts of Louisiana in such a manner as to give them their full literal effect. See *Lombas* v. *Collet*, 20 La. Ann. 79; *Marmillon* v. *Archinard*, 24 La. Ann. 610; *Gay* v. *Bovard*, 27 La. Ann. 290; Id. 243; *Morrison* v. *Citizens Bank*, Id. 401; *Succession of Marc*, 29 La. Ann. 412; *Logan* v. *Herbert*, 30 La. Ann. 727; *Slocomb* v. *Rogillio*, 30 La. Ann. 833; *Gay* v. *Daigre*, Id. 1007; *Gallaugher* v. *Hebrew Congregation*, 35 La. Ann. 829; *Givanovitch* v. *Hebrew Congregation*, 36 La. Ann. 272.

An examination of these cases shows that the requirement that a vendor's privilege must be recorded within the time allowed by law (that is, within six days from date, prior to 1870; and on the day of the date, since 1870) in order to give it priority over a mortgage recorded before it, relates to mortgages given by the vendee as well as mortgages given by the vendor. According to the decisions, the act of sale passes the property to the purchaser whether recorded or not, so that he can make valid mortgages on it, as well as subject it to judgments against him; but unless recorded in the office of the register of mortgages, it does [224] not preserve the vendor's privilege. It was at one time held otherwise, namely: that, if the vendor's privilege was recorded simultaneously with the act of sale (which it always is when it is contained in the act of sale), the privilege was seasonably recorded to preserve it in full force. *Rochereau* v. *Colomb*, 27 La. Ann. 337; *Jumonville* v. *Sharp*, Id. 461. But these decisions were overruled in subsequent cases. *Gallaugher* v. *Hebrew Congregation*, 35 La. Ann. 829; *Givanovitch* v. *Hebrew Congregation*, 36 La. Ann. 272.

The doctrine of the French jurists, deduced from the Code Napoleon, corresponded substantially with the decisions in *Rochereau* v. *Colomb* and *Jumonville* v. *Sharp*. The text of the Code was nearly the same as that of the Louisiana Statutes. Art. 2106 declares that "Between creditors, privileges have no effect on immovables, except when they are made public by inscription on the records of the custodian of mortgages, in the manner prescribed by law, and to be computed from the date of such inscription," subject to the exceptions enumerated, which do not affect the present question. See Paul Pont, Priv. & Hypothèques, arts. 252, 253, etc. But, of course, in the law of real estate (immovables) we are to follow the final decisions of the state courts. *Thatcher* v. *Powell* 19 U. S. 6 Wheat. 119 [5: 221]; *Beauregard* v. *New Orleans*, 59 U. S. 18 How. 497 [15: 469]; *Suydam* v. *Williamson*, 65 U. S. 24 How. 427 [16: 742]; *Fairfield* v. *Gallatin Co.* 100 U. S. 47 [25: 544]; *Bondurant* v. *Watson*, 103 U. S. 281 [26: 447]; *Enfield* v. *Jordan*, 119 U. S. 680 [30: 523].

From this review of the Louisiana law of registry as applied to mortgages and privileges, it is clear that Voorhies, by neglecting to record his act of sale until 1872, lost the priority of his vendor's privilege and mortgage as against Payne, Huntington & Co., provided they recorded their mortgages taken in 1868 and 1870; and, in that case, they had a perfect right to proceed to the foreclosure of their mortgages, without making Voorhies a party if their mortgages contained the *pact de non alienando*. But here again the defects of the record prevent us from knowing the truth; defects which the appellee, Payne, could have had remedied had he given any attention to this appeal, and required the acts of sale, and the proceedings [225] referred to in the bill of complaint, to be returned to this court. As it is, we do not know that Payne, Huntington & Co. did record their mortgages, nor whether they contained the *pact de non alienando*. As the case stands before us it does not appear that they were ever recorded, or that they contained the pact. If neither of these things took place, then the complainant is entitled to at least a portion of the relief which he seeks. He is entitled to have the property foreclosed and subjected to the payment of his mortgage. For, in that case, being a prior mortgagee from the time of recording the act of sale, he is not bound by the proceedings on the executory process to which he was not a party. *Dupasseur* v. *Rochereau*, 88 U. S. 21 Wall. 130 [22: 588]; *Jackson* v. *Ludeling*, Id. 616 [492]. He is hardly in a position to ask for a rescission of his sale to Johnson, whether his privilege and mortgage have been prescribed or not, for it has been held by the Supreme Court of Louisiana that the parties to the sale and the recission must be the same. *Augusta Ins. Co.* v. *Packwood*, 9 La. Ann. 75. The suit is now properly against Payne, as well as the executor of Johnson, and Payne is not one of the parties to the act of sale. However, on this point we give no opinion.

The decree of the Circuit Court must be reversed and the cause remanded, with instructions to overrule the demurrer, and to give the defendants leave to answer the bill, with such further proceedings as law and equity may require.

Ex parte:

In the Matter of DAVID S. TERRY, [289]

Petitioner.

(See S. C. Reporter's ed. 289-314.)

Habeas corpus—*petition — contempt—jurisdiction—breach of the peace—proceedings to punish for contempt—review—trial.*

1. This court has power to issue a writ of *habeas corpus* for the purpose of inquiring into the cause of the restraint of the liberty of prisoners in jail under or by color of the authority of the United States, and of persons who are in custody in violation of the Constitution or laws of the United States.

2. If it appears from the petition itself that the party is not entitled thereto, the writ need not be awarded.

3. The power to punish for contempt is inherent in a court.

4. Writs of *habeas corpus* may be used to obtain the discharge of one imprisoned under the order of a court of the United States which does not possess jurisdiction of the person or of the subject matter.

5. A breach of the peace in open court is a direct disturbance and a palpable contempt of the authority of the court.

6. It is competent for the circuit court, immediately upon the commission, in its presence, of such a contempt, to proceed upon its own knowledge of the facts, and punish the offender, without further proof, and without issue or trial in any form.

7. Whether the facts justified such punishment was for that court to determine. Its conclusion

upon such facts is not open to inquiry or review in proceeding by *habeas corpus*.

8. The retirement of the petitioner from the court room, into another room of the same building, after he had been guilty of misbehavior in the presence of the court, and had violently obstructed the execution of its lawful order, did not defeat the jurisdiction which it possessed to order on the same day his immediate imprisonment, without other proof than that supplied by its actual knowledge and view of the facts, and without examination or trial in any form.

[No. 6.]

Submitted Oct. 18, 1888. Decided Nov. 12, 1888.

APPLICATION to this court for a writ of *habeas corpus* to relieve petitioner from imprisonment under an order from the Circuit Court of the United States for the Northern District of California, for contempt of that court. *Denied.*

Reported below, 36 Fed. Rep. 419.

The facts are stated in the opinion.

Messrs. **Samuel Shellabarger** and **J. M. Wilson**, for petitioner:

As the jurisdiction of the circuit court is limited, a case is without its jurisdiction unless the contrary affirmatively appears.

Grace v. *Am. Cent. Ins. Co.* 109 U. S. 283 (27: 935); *Turner* v. *Bank of N. A.* 4 U. S. 4 Dall. 8 (1: 718); *Ex parte Smith*, 94 U. S. 455 (24: 165); *Robertson* v. *Cease*, 97 U. S. 646 (24: 1057); *Bors* v. *Preston*, 111 U. S. 255 (28: 420).

The record fails to disclose jurisdiction, since it fails to show that notice was served upon the contemnor, and further fails to show that he was present in court when he was condemned.

Ex parte Kearney, 20 U. S. 7 Wheat. 41 (5: 392); *Hayes* v. *Fischer*, 102 U. S. 122 (26: 96); *Re Chiles*, 89 U. S. 22 Wall. 168 (22: 822); *Stimpson* v. *Putnam*, 41 Vt. 248; *Worden* v. *Searls*, 121 U. S. 14 (30: 853); *Ex parte Fisk*, 113 U. S. 718 (28: 1119).

Before conviction in a criminal prosecution for contempt, there must be opportunity to be heard.

Relator had gone away from the court and had no knowledge or suspicion that he was being prosecuted for contempt until after he was condemned in his absence.

Notice of some kind is vital.

Bagg's Case, 11 Coke, 99 a: *Rex* v. *Cambridge University*, 1 Str. 567; *Cooper* v. *Board of Works*, 14 C. B. N. S. 194; *Meade* v. *Deputy Marshal*, 1 Brock. 324; *Goetcheus* v. *Matthewson*, 61 N. Y. 420; *Windsor* v. *McVeigh*, 93 U. S. 277 (23: 914); *McVeigh* v. *U. S.* 78 U. S. 11 Wall. 267 (20: 81); *St. Clair* v. *Cox*, 106 U. S. 356 (27: 225); *Pana* v. *Bowler*, 107 U. S. 545 (27: 430); *Reg.* v. *Dyer*, 1 Salk. 181, 6 Mod. 41; Cases collected in 8 Mod. 154, note (a); *Rex* v. *Benn*, 6 T. R. 198; *Rex* v. *Venables*, 2 Ld. Raym. 1407; *Rex* v. *Simpson*, 1 Str. 46; *Rex* v. *Allington*, Id. 678; *Rex* v. *Harwood*, 2 Str. 1088; 3 Burr. 1716, 1768; *Rex* v. *Constable*, 7 Dow. & Ry. K. B. 663; *S. C.* 3 Dow. & Ry. M. C. 488.

An alleged contempt in the face of the court, and not then and there instantly punished by the court, and which remained unnoticed until after the offender had left the court, can only be prosecuted upon and after notice and due accusation and opportunity to defend.

Re Pollard, L. R. 2 P. C. Cas. 106; *Reg.* v. *Archbishop of Canterbury*, 1 Ell. & Ell. 554; *Capel* v. *Child*, 2 Cromp. & J. 556; *King* v. *Cambridge University*, 8 Mod. 154; *Case of Foote*, 18 Pac. Rep. 678; *Rex* v. *Harris*, Comb. 447; *People* v. *Winchell*, 7 Cow. 525; *People* v. *Clark*, 1 Park. C. R. 361; *State* v. *Hughes*, 2 Ala. 102; *Hooker* v. *Com.* 13 Gratt. 763; *People* v. *Kohler*, 5 Cal. 72; Lofft. 400; Ld. Raym. 267; 1 Salk. 400; Skinn. 684.

The record must show affirmatively that the defendant was then present.

Hamilton v. *Com.* 16 Pa. 129; *Dunn* v. *Com.* 6 Pa. 384; *State* v. *Matthews*, 20 Mo. 55; *Scaggs* v. *State*, 8 Smedes & M. 722; *Safford* v. *People*, 1 Park. C. R. 474; *Kelly* v. *State*, 3 Smedes & M. 518; *Eliza* v. *State*, 39 Ala. 693; *Graham* v. *State*, 40 Ala. 660; *Stockham* v. *French*, 1 Bing. 365; *Ex parte Whitchurch*, 1 Atk. 57; *Hollingsworth* v. *Duane*, J. B. Wallace, 77.

Disavowal, on oath, of any intended disrespect to the court, purges the contempt and entitles the prisoner to his discharge.

Rapalje on Contempt, 166, § 121; *Wells* v. *Com.* 21 Gratt. 500.

Mr. Justice **Harlan** delivered the opinion of the court: [297]

This is an original application to this court for a writ of *habeas corpus*. The petitioner, David S. Terry, alleges that he is unlawfully imprisoned, under an order of the Circuit Court of the United States for the Northern District of California, in the jail of Alameda County in that State.

That order is made a part of his application, and is as follows:

"In the Circuit Court of the United States of America for the Northern District of California.

"In the Matter of Contempt of David S. Terry. In open court.

"*Whereas*, on this third day of September, 1888, in open court, and in the presence of the judges thereof, to wit, Hon. Stephen J. Field, *Circuit Justice*, presiding; Hon. Lorenzo Sawyer, *Circuit Judge*, and Hon. George M. Sabin, *District Judge*, during the session of said court, and while said court was engaged in its regular business, hearing and determining causes pending before it, one Sarah Althea Terry was guilty of misbehavior in the presence and hearing of said court; [298]

"*And whereas*, said court thereupon duly and lawfully ordered the United States Marshal, J. C. Franks, who was then present, to remove the said Sarah Althea Terry from the court room;

"*And whereas*, the said United States Marshal then and there attempted to enforce said order, and then and there was resisted by one David S. Terry, an attorney of this court, who, while the said marshal was attempting to execute said order in the presence of the court, assaulted the said United States Marshal, and then and there beat him, the said marshal, and then and there wrongfully and unlawfully assaulted said marshal with a deadly weapon, with intent to obstruct the administration of justice, and to resist such United States Marshal and the execution of the said order;

"*And whereas*, the said David S. Terry was guilty of a contempt of this court, by misbehavior in its presence, and by a forcible resistance

in the presence of the court to a lawful order thereof, in the manner aforesaid:

"*Now, therefore, be it ordered and adjudged by this court*, That the said David S. Terry, by reason of said acts, was, and is, guilty of contempt of the authority of this court, committed in its presence on this third day of September, 1888;

"*And it is further ordered*, That the said David S. Terry be punished for said contempt by imprisonment for the term of six months;

"*And it is further ordered*, That this judgment be executed by imprisonment of the said David S. Terry in the county jail of the County of Alameda, in the State of California, until the further order of this court, but not to exceed said term of six months;

"*And it is further ordered*, That a certified copy of this order, under the seal of the court, be process and warrant for executing this order."

[299] The petition alleges that "Said order was made by said court in the absence of your petitioner, and without his having any notice of the intention of said court to take any proceeding whatever in relation to the matters referred to in said order, and without giving your petitioner any opportunity whatever of being heard in defense of the charges therein made against him."

The petition proceeds:

"And your petitioner further showeth that on the 12th day of September, 1888, he addressed to the said circuit court a petition, duly verified by his oath, in the words and figures following, to wit:

'In the Circuit Court of the United States, Ninth Circuit, Northern District of California.

'In the Matter of Contempt of David S. Terry.

'To the Honorable Circuit Court aforesaid:

'The petition of David S. Terry respectfully represents:

'That in all the matters and transactions occurring in the said court on the third day of September, inst., upon which the order in this matter was based, your petitioner did not intend to say or do anything disrespectful to said court or the judges thereof, or to any one of them; that when petitioner's wife, the said Sarah Althea Terry, first arose from her seat, and before she uttered a word, your petitioner used every effort in his power to cause her to resume her seat and remain quiet; and he did nothing to encourage her in her acts of indiscretion; when this court made the order that petitioner's wife be removed from the court room, your petitioner arose from his seat with the purpose and intention of himself removing her from the court room, quietly and peaceably, and had no intention or design of obstructing or preventing the execution of the said order of the court; that he never struck or offered to strike the United States Marshal until the said marshal had assaulted himself, and had in his presence violently, and, as he believed, unnecessarily, assaulted petitioner's wife.

'Your petitioner most solemnly avers that he [300] neither drew or attempted to draw any deadly weapon of any kind whatever in said court room, and that he did not assault or attempt to assault the United States Marshal with any deadly weapon in said court room or elsewhere.

'And in this connection he respectfully represents that after he had left said court room he heard loud talking in one of the rooms of the United States Marshal, and among the voices proceeding therefrom he recognized that of his wife, and he thereupon attempted to force his way into said room through the main office of the United States Marshal; the door of this room was blocked with such a crowd of men that the door could not be closed; that your petitioner then for the first time drew from inside his vest a small sheath knife, at the same time saying to those standing in his way in said door, that he did not want to hurt any one; that all he wanted was to get in the room where his wife was; the crowd then parted, and your petitioner entered the doorway, and there saw a United States Deputy Marshal with a revolver in his hand pointed to the ceiling of the room; some one then said, "Let him in, if he will give up his knife," and your petitioner immediately released hold of the knife to some one standing by.

'In none of these transactions did your petitioner have the slightest idea of showing any disrespect to this honorable court or any of the judges thereof.

'That he lost his temper, he respectfully submits, was a natural consequence of himself being assaulted when he was making an honest effort to peacefully and quietly enforce the order of the court so as to avoid a scandalous scene, and of seeing his wife so unnecessarily assaulted in his presence.

'Wherefore, your petitioner respectfully requests that this honorable court may, in the light of the facts herein stated, revoke the order made herein committing him to prison for six months.

'And your petitioner will ever pray, etc.

'Dated September 12th, 1888.'"

The petitioner states that on the 17th of September, 1888, the circuit court "declined and refused to grant to your petitioner the relief prayed for or any other relief."

He also insists, in his petition, that the "circuit court had no jurisdiction of his person at [301] the time it made the order hereinbefore set forth, and possessed no lawful power to make said order, and that he was entitled to be relieved from his said imprisonment upon the filing of the petition aforesaid, and that said order of said court is otherwise illegal and unwarranted by the law of the land."

That he may be relieved of said detention and imprisonment, he prays that he may be forthwith brought before this court, upon writ of *habeas corpus*, to do, submit to, and receive what the law may require.

The above presents the entire case made by the application before us.

There can be no dispute either as to the power or duty of this court in cases of this character. Its power to issue a writ of *habeas corpus* for the purpose of inquiring into the cause of the restraint of the liberty of the person in whose behalf the writ is asked, is expressly conferred by statute, and extends to the cases, among others, of prisoners in jail under or by

color of the authority of the United States, and of persons who are in custody in violation of the Constitution or laws of the United States. R. S. §§ 751, 752, 753. Its general duty in such cases is also prescribed by statute. Upon complaint in writing, signed by, and verified by the oath of, the person for whose relief it is intended, setting forth the facts concerning the detention of the party restrained, in whose custody he is detained, and by virtue of what claim or authority, if known, it is the duty of the court to "forthwith award a writ of *habeas corpus*, unless it appears from the petition itself that the party is not entitled thereto." R. S. §§ 754-5. The writ need not, therefore, be awarded if it appear upon the showing made by the petitioner, that if brought into court, and the cause of his commitment inquired into, he would be remanded to prison. *Ex parte Kearney*, 20 U. S. 7 Wheat. 38, 45 [5: 391, 393]; *Ex parte Watkins*, 28 U. S. 3 Pet. 193, 201 [7: 650, 652]; *Ex parte Milligan*, 71 U. S. 4 Wall. 2, 11 [18: 281].

It is proper in this connection to say that since the passage of the Act of March 3, 1885, chap. 353, 23 Stat. at L. 437, amending § 764 of [302] the Revised Statutes so as to give this court jurisdiction, upon appeal, to review the final decisions of the Circuit Courts of the United States in cases of *habeas corpus*, when the petitioner alleges that he is restrained of his liberty in violation of the Constitution or laws of the United States, the right to the writ, upon original application to this court, is not, in every case, an absolute one. In *Wales* v. *Whitney*, 114 U. S. 564 [29: 277], it appears that a direct application to this court for the writ, after a decision adverse to the petitioner in the Supreme Court of the District of Columbia, was abandoned on the suggestion that he could bring that decision to this court for review under the Act of 1885; and it was brought here under that statute. In *Ex parte Royall*, 117 U. S. 241, 250 [29: 868, 871], upon appeal from a decision of a Circuit Court of the United States refusing to award the writ to one alleging that he was restrained of his liberty in violation of the Constitution of the United States by an order of a state court, in which he stood indicted for an alleged offense against the laws of such State, it was held that while the circuit court had power to grant the writ and discharge the accused in advance of his trial under the indictment, it was not bound to exercise that power immediately upon application being made for the writ, but could await the result of the trial, and, in its discretion, as the special circumstances of the case might require, put the petitioner to his writ of error from the highest court of the State. In *Sawyer's Case*, 124 U. S. 200 [31: 402], this court entertained an original application for a writ of *habeas corpus* without requiring the petitioner to apply, in the first instance, to the proper circuit court; but, in that case, as in this, the application proceeded upon the ground that the circuit court itself had made the order by which he was alleged to have been deprived of his liberty in violation of the Constitution of the United States.

Nor can there be any dispute as to the power of a Circuit Court of the United States to punish contempts of its authority. In *United States* v. *Hudson*, 11 U. S. 7 Cranch, 34 [3: 259], it was held that the courts of the United States, from the very nature of their institution, possess the power to fine for contempt, imprison for con- [303] tumacy, enforce the observance of order, etc. In *Anderson* v. *Dunn*, 19 U. S. 6 Wheat. 204, 227 [5: 242, 247], it was said that "Courts of justice are universally acknowledged to be vested, by their very creation, with power to impose silence, respect and decorum in their presence, and submission to their lawful mandates." So, in *Ex parte Robinson*, 86 U. S. 19 Wall. 505, 510 [22: 205, 207]: "The power to punish for contempts is inherent in all courts; its existence is essential to the preservation of order in judicial proceedings, and to the enforcement of the judgments, orders, and writs of the courts, and consequently to the due administration of justice. The moment the courts of the United States were called into existence and invested with jurisdiction over any subject, they became possessed of this power." *Ex parte Bollman*, 8 U. S. 4 Cranch, 75, 94 [2: 554, 561]; Story, Const. § 1774; Bac. Abr. *Courts*, E. And such is the recognized doctrine in reference to the powers of the courts of the several States. "The summary power to commit and punish for contempts tending to obstruct or degrade the administration of justice," the Supreme Judicial Court of Massachusetts well said, in *Cartwright's Case*, 114 Mass. 230, 238, "is inherent in courts of chancery and other superior courts, as essential to the execution of their powers and to the maintenance of their authority, and is part of the law of the land, within the meaning of Magna Charta and of the 12th article of our Declaration of Rights." The Declaration of Rights here referred to was that which formed part of the Constitution of Massachusetts, and contained the prohibition, inserted in most of the American Constitutions, against depriving any person of life, liberty or estate, except by the judgment of his peers, or the law of the land. So in *Cooper's Case*, 32 Vt. 253, 257: "The power to punish for contempt is inherent in the nature and constitution of a court. It is a power not derived from any statute, but arising from necessity; implied, because it is necessary to the exercise of all other powers." Without such power, it was observed in *Easton* v. *State*, 39 Ala. 552, the administration of the law would be in continual danger of being thwarted by the lawless. To the same effect are *Watson* v. *Williams*, 36 Miss. 344; *Johnston* v. *Com.* 1 Bibb, 598; *Clark* [304] v. *People*, Breese, 266; *Com.* v. *Dandridge*, 2 Va. Cas. 408; *Ex parte Hamilton*, 51 Ala. 68; *Redman* v. *State*, 28 Ind. 212; *People* v. *Turner*, 1 Cal. 153; *State* v. *Morrill*, 16 Ark. 388; and numerous cases cited in note to *Clark* v. *People* (Breese, 266) in 12 Am. Dec. 178. See also *Queen* v. *Lefroy*, L. R. 8 Q. B. 134. But this power, so far as the Circuit Courts of the United States are concerned, is not simply incidental to their general power to exercise judicial functions; it is expressly recognized, and the cases in which it may be exercised are defined, by Acts of Congress. They have power, by statute, "to punish, by fine or imprisonment, at the discretion of the court, contempts of their authority; *Provided*, That such power to punish contempts shall not be construed to extend to any cases except the misbehavior of

any person in their presence, or so near thereto as to obstruct the administration of justice, the misbehavior of any of the officers of said courts in their official transactions, and the disobedience or resistance by any such officer, or by any party, juror, witness, or other person, to any lawful writ, process, order, rule, decree, or command of the said courts." R. S. § 725; 1 Stat. 83; 4 Id. 487.

With these observations as to the power and duty of the courts of the United States, when applied to for writs of *habeas corpus*, we proceed to the consideration of the general question as to whether the petition in this case shows that the prisoner is or is not entitled to the writ. The contention of his counsel is that the circuit court failed to take such steps as were necessary to give jurisdiction of the person of the prisoner at the time the order was made committing him to jail for contempt; and therefore, that the order was illegal, and the writ should be awarded. If this position is sound, the conclusion stated would necessarily follow; for while the writ may not be used to correct mere errors or irregularities, however flagrant, committed within the sphere of the authority of the court, it is an appropriate writ to obtain the discharge of one imprisoned under the order of a court of the United States which does not possess jurisdiction of the per-
[305] son or of the subject matter. *Ex parte Lange*, 85 U. S. 18 Wall. 163 [21:872]; *Ex parte Parks*, 93 U. S. 18 [23:787]; *Ex parte Siebold*, 100 U. S. 371 [25:717]; *Ex parte Rowland*, 104 U. S. 604 [26:864]; *Ex parte Curtis*, 106 U. S. 371 [27:234]; *Re Ayers*, 123 U. S. 443, 485 [31:216, 223]; *Re Sawyer*, 124 U. S. 200, 221[31:402, 409]; *Harvey* v. *Tyler*, 69 U. S. 2 Wall. 328, 345 [17: 871, 875]; *Ex parte Fisk*, 113 U. S. 713, 718 [28: 1117, 1119]. In this last case it was said that when "a court of the United States undertakes by its process of contempt to punish a man for refusing to comply with an order which that court had no authority to make, the order itself, being without jurisdiction, is void; and the order punishing for the contempt is equally void. It is well settled now, in the jurisprudence of this court, that when the proceeding for contempt in such a case results in imprisonment, this court will, by its writ of *habeas corpus*, discharge the prisoner." A judgment which lies without the jurisdiction of a court, even one of superior jurisdiction and general authority, is, upon reason and authority, a nullity.

This question, it must be here observed, does not involve an inquiry into the truth of the specific facts recited in the order of commitment, as constituting the contempt. As the writ of *habeas corpus* does not perform the office of a writ of error or an appeal, these facts cannot be re-examined or reviewed in this collateral proceeding. They present a case which, so far as the subject matter is concerned, was manifestly within the jurisdiction of the circuit court. Notwithstanding the statements made in the petition addressed to the circuit court on the 12th of September, as to what the petitioner did, and as to what he did not do, on the occasion referred to in the order of commitment, it must be taken as true, upon the present application, and would be taken as true, upon a return to the writ, if one were awarded, that, on the third of September, 1888, Mrs. Terry was guilty of misbehavior in the presence of the judges of the circuit court, while they were engaged in the hearing and determination of causes pending before it; that the court thereupon ordered the marshal to remove her from the court room; that the petitioner, an attorney, and, therefore an officer of the court, resisted the enforcement of the order by beating the marshal, and by assaulting him with a deadly weapon with in- [306
tent to obstruct the administration of justice and the execution of said order. It must also be taken as true, upon the present application, that what the petitioner characterizes as self defense against an assault of the marshal, but which the circuit court in its order of commitment expressly finds, upon its personal view of the facts, was violence and misconduct upon his part, occurred in its immediate presence; for, if it were competent in this proceeding for the petitioner to contradict that fact, this has not been done. While in his petition to this court he disputes the jurisdiction of the circuit court of his person at the time he was imprisoned, his petition addressed to that court on the 12th of September, and made part of the present application, makes no question as to the alleged contempt having been committed in the presence of the circuit court, and only puts in issue the principal facts recited in the order of commitment as constituting the contempt for which he was punished. Those facts necessarily entered into the inquiry by the circuit court as to whether the prisoner was or was not guilty of contempt; and this court cannot, in this proceeding, in virtue of any power conferred upon it by existing legislation, go behind the determination of them by that court. It can deal only with such defects in the proceedings as render them, not simply erroneous or irregular, but absolutely void. *Ex parte Robinson*, 86 U. S. 19 Wall. 505, 511 [22:205, 208]; *Ex parte Kearney*, 20 U. S. 7 Wheat. 38, 43 [5:391, 392].

What, then, are the grounds upon which the petitioner claims that the circuit court was without jurisdiction to make the order committing him to jail? They are: 1. That the order was made in his absence; 2. That it was made without his having had any previous notice of the intention of the court to take any steps whatever in relation to the matters referred to in the order; 3. That it was made without giving him any opportunity of being first heard in defense of the charges therein made against him.

The second and third of these grounds may be dismissed as immaterial in any inquiry this court is at liberty, upon this original application, to make. For, upon the facts recited in the order of September 3, showing a clear case of contempt committed in the face of the cir- [307
cuit court, which tended to destroy its authority, and, by violent methods, to embarrass and obstruct its business, the petitioner was not entitled, of absolute right, either to a regular trial of the question of contempt, or to notice by rule of the court's intention to proceed against him, or to opportunity to make formal answer to the charges contained in the order of commitment. It is undoubtedly a general rule in all actions, whether prosecuted by private parties or by the Government, that is, in civil and criminal cases, that "A sentence of a court pronounced against a party without hearing him,

or giving him an opportunity to be heard, is not a judicial determination of his rights, and is not entitled to respect in any other tribunal." *Windsor* v. *McVeigh*, 93 U. S. 274, 277 [23:915, 916]. But there is another rule, of almost immemorial antiquity, and universally acknowledged, which is equally vital to personal liberty and to the preservation of organized society, because upon its recognition and enforcement depend the existence and authority of the tribunals established to protect the rights of the citizen, whether of life, liberty, or property, and whether assailed by the illegal acts of the Government or by the lawlessness or violence of individuals. It has relation to the class of contempts which, being committed in the face of a court, imply a purpose to destroy or impair its authority, to obstruct the transaction of its business, or to insult or intimidate those charged with the duty of administering the law. Blackstone thus states the rule: "If the contempt be committed in the face of the court, the offender may be instantly apprehended and imprisoned, at the discretion of the judges, without any further proof or examination. But in matters that arise at a distance, and of which the court cannot have so perfect a knowledge, unless by the confession of the party or the testimony of others, if the judges upon affidavit see sufficient ground to suspect that a contempt has been committed, they either make a rule on the suspected party to show cause why an attachment should not issue against him; or, in very flagrant instances of contempt, the attachment issues in the first instance, as it also does if no sufficient cause be [308] shown to discharge, and thereupon the court confirms and makes absolute the original rule." 4 Bl. Com. 286. In Bacon's Abridgment, title, *Courts*, E, it is laid down that "Every court of record, as incident to it, may enjoin the people to keep silence, under a pain, and impose reasonable fines, not only on such as shall be convicted before them of any crime on a formal prosecution, but also on all such as shall be guilty of any contempt in the face of the court, as by giving opprobrious language to the judge, or obstinately refusing to do their duty as officers of the court, and immediately order them into custody." It is utterly impossible, said Abbott, *C. J.*, in *Rex* v. *Davison*, 4 Barn. & Ald. 329, 333, "that the law of the land can be properly administered if those who are charged with the duty of administering it have not power to prevent instances of indecorum from occurring in their own presence. That power has been vested in the judges, not for their personal protection, but for that of the public. And a judge will depart from his bounden duty if he forbears to use it when occasions arise which call for its exercise."

To the same effect are the adjudications by the courts of this country. In *State* v. *Woodfin*, 5 Ired. L. 199, where a person was fined for a contempt committed in the presence of the court, it was said: "The power to commit or fine for contempt is essential to the existence of every court. Business cannot be conducted unless the court can suppress disturbances, and the only means of doing that is by immediate punishment. A breach of the peace *in facie curiæ* is a direct disturbance and a palpable contempt of the authority of the court. It is a case that does not admit of delay, and the court would be without dignity that did not punish it promptly and without trial. Necessarily there can be no inquiry *de novo* in another court, as to the truth of the fact. There is no mode provided for conducting such an inquiry. There is no prosecution, no plea, nor issue upon which there can be a trial." So in *Whittem* v. *State*, 36 Ind. 196: "When the contempt is committed in the presence of the court, and and the court acts upon view and without trial and inflicts the punishment, there will be no charge, no plea, no issue and no trial; and the record that shows the punishment will also [309] show the offense, and the fact that the court had found the party guilty of the contempt; on appeal to this court any fact found by the court below would be taken as true, and every intendment would be made in favor of the action of the court." Again, in *Ex parte Wright*, 65 Ind. 508, the court, after observing that a direct contempt is an open insult in the face of the court to the persons of the judges while presiding, or a resistance to its powers in their presence, said: "For a direct contempt the offender may be punished instantly by arrest and fine or imprisonment, upon no further proof or examination than what is known to the judges by their senses of seeing, hearing," etc. 4 Steph. Com. Bk. 6, chap. 15; Tidd, Pr. 479-80; *Ex parte Hamilton*, 51 Ala. 68; *People* v. *Turner*, 1 Cal. 155.

It is true, as counsel suggest, that the power which the court has of instantly punishing, without further proof or examination, contempts committed in its presence, is one that may be abused and may sometimes be exercised hastily or arbitrarily. But that is not an argument to disprove either its existence or the necessity of its being lodged in the courts. That power cannot be denied them without inviting or causing such obstruction to the orderly and impartial administration of justice as would endanger the rights and safety of the entire community. What was said in *Ex parte Kearney*, 20 U. S. 7 Wheat. 39, 45 [5:391, 393], may be here repeated: "Wherever power is lodged it may be abused. But this forms no solid objection against its exercise. Confidence must be reposed somewhere; and if there should be an abuse, it will be a public grievance, for which a remedy may be applied by the Legisture, and is not to be devised by courts of justice."

It results from what has been said that it was competent for the circuit court, immediately upon the commission, in its presence, of the contempt recited in the order of September 3, to proceed upon its own knowledge of the facts, and punish the offender, without further proof, and without issue or trial in any form. It was not bound to hear any explanation of his motives, if it was satisfied, and we must conclusively presume, from the record before [310] us, that it was satisfied—from what occurred under its own eye and within its hearing—that the ends of justice demanded immediate action, and that no explanation could mitigate his offense or disprove the fact that he had committed such contempt of its authority and dignity as deserved instant punishment. Whether the facts justified such punishment was for that court to determine under its solemn responsi-

bility to do justice, and to maintain its own dignity and authority. *Re Chiles*, 89 U. S. 22 Wall. 157, 168 [22:819, 823]. Its conclusion upon such facts, we repeat, is not, under the statutes regulating the jurisdiction of this court, open to inquiry or review in this collateral proceeding. If we were to indulge in any presumption as to what actually occurred when the marshal proceeded in the execution of the order to remove Mrs. Terry from the court room, we must presume that the circuit court fully considered the statements contained in the petition of September 12, and knowing them to be inaccurate or untrue, refused to set aside or modify its previous order of commitment. Its action in that regard cannot be revised or annulled by this court upon an original application for *habeas corpus*.

But it is contended that the order of September 3 was void, because, as alleged in the present application for the writ of *habeas corpus*, it was made in the "absence" of the petitioner. In considering this suggestion, it must not be forgotten that the order of imprisonment shows, and the fact is not asserted to be otherwise, that it was made and entered on the same day on which, and, presumably, at the same session of the court at which, the contempt was committed; and there is no claim that any more time intervened between the commission of the contempt, and the making of the order, than was reasonably required to prepare and enter in due form such an order as the court, upon consideration, deemed proper or necessary. Indeed, the petition of September 12, made part of the present application, shows that the petitioner, after his personal conflict with the marshal in the presence of the judges, voluntarily left the court room, and with drawn knife forced his way into another room in the [311] same building, occupied by the marshal, and to which, we presume, the latter, in executing the order above referred to, had removed Mrs. Terry. There is no pretense that the petitioner left the building in which the court was held before the order of commitment was passed.

The precise question, therefore, to be now determined is whether the retirement of the petitioner from the court room, into another room of the same building, after he had been guilty of misbehavior in the presence of the court, and had violently obstructed the execution of its lawful order, defeated the jurisdiction which it possessed, at the moment the contempt was committed, to order his immediate imprisonment, without other proof than that supplied by its actual knowledge and view of the facts, and without examination or trial in any form? In our judgment this question must be answered in the negative. Jurisdiction of the person of the petitioner attached instantly upon the contempt being committed in the presence of the court. That jurisdiction was neither surrendered nor lost by delay on the part of the circuit court in exercising its power to proceed, without notice and proof, and upon its own view of what occurred, to immediate punishment. The departure of the petitioner from the court room to another room, near by, in the same building, was his voluntary act. And his departure, without making some apology for, or explanation of, his conduct, might justly be held to aggravate his offense, and to make it plain that, consistently with the public interests, there should be no delay, upon the part of the court, in exerting its power to punish.

If, in order to avoid punishment, he had absconded or fled from the building, immediately after his conflict with the marshal, the court, in its discretion, and as the circumstances rendered proper, could have ordered process for his arrest and given him an opportunity, before sending him to jail, to answer the charge of having committed a contempt. But in such a case the failure to order his arrest, and to give him such opportunity of defense, would not affect its power to inflict instant punishment. Jurisdiction to inflict such punishment having attached while he was in the presence of the court, it would not have been defeated or lost [312] by his flight and voluntary absence. Upon this point the decision in *Middlebrook* v. *State*, 43 Conn. 268, is instructive. That was a case of contempt committed by a gross assault upon another in open court. The offender immediately left the court house and the State. The court made reasonable efforts to procure his personal attendance, and, those failing, a judgment was entered in his absence, sentencing him to pay a fine and to be imprisoned for contempt of court. One of the questions presented for determination was whether there was jurisdiction of the person of the absent offender. The court said: "The offense was intentionally committed in the presence of the court. When the first blow was struck, that instant the contempt was complete, and jurisdiction attached. It did not depend upon the arrest of the offender, nor upon his being in actual custody, nor even upon his remaining in the presence of the court. When the offense was committed he was in the presence and, constructively, at least, in the power of the court. He may by flight escape merited punishment; but that cannot otherwise affect the right or the power of the court. Before the court could exert its power, the offender, taking advantage of the confusion, absented himself and went beyond the reach of the court; but, nevertheless, the jurisdiction remained, and it was competent for the court to take such action as might be deemed advisable, leaving the action to be enforced and the sentence carried into execution whenever there might be an opportunity to do so. If it was necessary that the judgment should be preceded by a trial, and the facts found upon a judicial hearing, as with ordinary criminal cases, it would be otherwise. But in this proceeding nothing of the kind was required. The judicial eye witnessed the act and the judicial mind comprehended all the circumstances of aggravation, provocation or mitigation; and the fact being thus judicially established, it only remained for the judicial arm to inflict proper punishment." It is true that the present case differs from the one just cited, in that the offender did not attempt by flight to escape punishment for his offense. But that circumstance could not affect the power of the circuit court, without trial or further proof, to [313] inflict instant punishment upon the petitioner for the contempt committed in its presence. It was within the discretion of that court, whose dignity he had insulted, and whose authority he had openly defied, to determine whether it should, upon its own view of what occurred,

proceed at once to punish him, or postpone action until he was arrested upon process, brought back into its presence, and permitted to make defense. Any abuse of that discretion would be at most an irregularity or error, not affecting the jurisdiction of the circuit court.

We have not overlooked the earnest contention of petitioner's counsel that the circuit court, in disregard of the fundamental principles of Magna Charta, in the absence of the accused, and without giving him any notice of the accusation against him, or any opportunity to be heard, proceeded "to accuse, to try, and to pronounce judgment, and to order him to be imprisoned; this, for an alleged offense committed at a time preceding, and separated from, the commencement of his prosecution." We have seen that it is a settled doctrine in the jurisprudence both of England and of this country, never supposed to be in conflict with the liberty of the citizen, that for direct contempts committed in the face of the court, at least one of superior jurisdiction, the offender may, in its discretion, be instantly apprehended and immediately imprisoned, without trial or issue, and without other proof than its actual knowledge of what occurred; and that, according to an unbroken chain of authorities, reaching back to the earliest times, such power, although arbitrary in its nature and liable to abuse, is absolutely essential to the protection of the courts in the discharge of their functions. Without it, judicial tribunals would be at the mercy of the disorderly and violent, who respect neither the laws enacted for the vindication of public and private rights, nor the officers charged with the duty of administering them. To say, in case of a contempt such as is recited in the order below, that the offender was accused, tried, adjudged to be guilty, and imprisoned, without previous notice of the accusation against him and without an opportunity to be heard, is [314] nothing more than an argument or protest against investing any court, however exalted, or however extensive its general jurisdiction, with the power of proceeding summarily, without further proof or trial, for direct contempts committed in its presence.

Nor, in our judgment, is it an accurate characterization of the present case to say that the petitioner's offense was committed "at a time preceding, and separated from, the commencement of his prosecution." His misbehavior in the presence of the court, his voluntary departure from the court room without apology for the indignity he put upon the court, his going a few steps, and under the circumstances detailed by him, into the marshal's room in the same building where the court was held, and the making of the order of the commitment, took place, substantially, on the same occasion, and constituted, in legal effect, one continuous complete transaction, occurring on the same day, and at the same session of the court. The jurisdiction, therefore, of the circuit court to enter an order for the offender's arrest and imprisonment was as full and complete as when he was in the court room in the immediate presence of the judges.

Whether the circuit court would have had the power at a subsequent term, or at a subsequent day of the same term, to order his arrest and imprisonment for the contempt, without first causing him to be brought into its presence, or without making reasonable efforts by rule or attachment to bring him into court, and giving him an opportunity to be heard before being fined and imprisoned, is a question not necessary to be considered on the present hearing.

The application for the writ of habeas corpus *is denied.*

Mr. Justice **Field** took no part in the decision of this case.

JOEL JOHNSON, *Appt.*, [374]
v.
GEORGE CHRISTIAN ET AL.

(See S. C. Reporter's ed. 374-382.)

Agent, authority of—injunction—ejectment.

1. Where one is not notified of the revocation of the authority of an agent, he is justified in acting upon the presumption of its continuance.
2. A court of equity will enjoin a judgment at law, if the matters set up in the bill, as a ground of relief, constitute equities unavailable as a defense in the action at law.
3. In the United States Courts a recovery in ejectment may be had upon the strict legal title only; and a court of law will not uphold or enforce an equitable title to land as a defense in such action.

[No 15.]

Submitted Oct. 12, 1888. Decided Nov. 5, 1888.

APPEAL from a decree of the Circuit Court of the United States for the Eastern District of Arkansas, in favor of plaintiffs, against the appellant, in a suit in equity to restrain appellant from enforcing a judgment in ejectment and to quiet title to lands. *Affirmed.*

The facts are stated in the opinion.

Messrs. **D. H. Reynolds** and **A. H. Garland**, *Atty.-Gen.*, for appellant.

Mr. **U. M. Rose**, for appellees.

For points and authorities of counsel, see Book 31, p. 820, Law. ed., where the former proceedings in the case are reported.

Mr. Justice **Lamar** delivered the opinion of the court:

This is a suit in equity brought in the United States Circuit Court in 1883 by appellees, George Christian and Jerry Stuart, against the appellant, Joel Johnson, praying an injunction to restrain him from enforcing a judgment in ejectment which he obtained in that court against said appellees for the recovery of certain lands in their possession, and to quiet their title to said lands against the claims of said appellant.

The bill alleges that one Julia J. Johnson, on the 8th day of March, 1871, as guardian of appellant, then a minor, loaned through her agent, Lycurgus L. Johnson, to one James F. Robinson, out of the funds of said appellant, $9,387.95, for which said James F. Robinson delivered to said Lycurgus L. Johnson notes for the amount, payable to Mrs. Julia J. Johnson, as guardian; and to secure said loan executed to Johnson a deed of trust conveying to him as trustee, for said Julia J. Johnson as guardian for appellant, certain lands therein

described, with the usual power of sale upon failure to pay the aforesaid notes when due; that after this transaction the said appellees bargained for and purchased from Robinson a [375] tract of 500 acres, being part of the land conveyed by the aforesaid trust deed, the said complainants agreeing to pay therefor 120 bales of cotton, which they aver to be a fair and adequate consideration, and the full value of the lands.

The bill further alleges that the said purchase was made with the full knowledge and consent of the said Lycurgus L. Johnson, who, in his capacity as said trustee and also as general agent of the said Julia J. Johnson, as guardian aforesaid, agreed and contracted that if the complainants would pay over to the said Julia J. Johnson the price agreed to be paid for said lands according to the terms of the purchase from Robinson as above stated, that the amount should be credited on the debt of Robinson, and the said tract purchased by them should be released from the deed of trust. That this contract and agreement of her said trustee and agent was ratified and confirmed by the said Julia J. Johnson, as guardian, who received the entire consideration agreed by them to be paid for said land, with a full knowledge of and acquiescence in said contract and agreement. That the said complainants have, in accordance with the stipulations and requirements of said trustee and agent, paid over the price agreed for said 500 acres of land, every dollar of the proceeds of which have gone to said Julia J. Johnson, as guardian of appellant, who has since then become of age.

The complainants further state, that afterward, the said Lycurgus L. Johnson having departed this life, his administrators advertised and sold, under the deed of trust, all the lands mentioned therein, including the said tract of 500 acres bought and paid for by complainants; and were bought in by the defendant Joel Johnson, who was then of lawful age.

That afterwards said defendant, claiming by virtue of said sale and purchase, instituted his suit in ejectment on the law side of the court, and that the complainants not being admitted to interpose in said ejectment suit their equitable defense to the same, he did at the term 188 obtain a judgment in ejectment against them, and now seeks to oust them of the possession of said lands by writ of possession founded on said judgment.

[376] The prayer of the bill is that the judgment in ejectment may be enjoined, and that the title of the complainants may be quieted, and such further relief, etc.

Joel Johnson in his answer denies that said Lycurgus L. Johnson was the agent and business manager of said guardian, Mrs. Julia J. Johnson, or that he acted as such in and about her business as guardian; and asserts that if any contract or agreement, such as that alleged in the bill, was made with said appellees by said Lycurgus L. Johnson, it was not made with the knowledge or by the authority of said Julia J. Johnson as guardian aforesaid, expressed or implied, nor in any manner recognized or ratified by her receipt of any of the consideration paid by said appellees for said land with knowledge of any such contract or agreement. Further answering, he says: "That if complainants are not protected by their vendor it will be a great wrong to them, but one for which this defendant is not in any manner responsible."

The only issue of fact raised by the pleadings relates to the agency of Lycurgus L. Johnson for Mrs. Julia J. Johnson, in her capacity as guardian of appellant, in the loan of the funds of her ward to Robinson upon the security binding the real estate of Robinson, and the subsequent transactions with appellees as vendees of a part of that land; and upon this point we are of opinion that the allegations of the bill are abundantly sustained by the proof.

James F. Robinson, the vendor of the ap- [378] pellees, testified substantially that he knew that Mr. Johnson acted as the agent for Mrs. Julia J. Johnson, in her capacity as guardian of Joel Johnson, in some matters, and especially in the loan of the money to him; that about the first of January, 1871, he borrowed from Mrs. Julia J. Johnson, as guardian of Joel Johnson the sum of $9,387.95; made the negotiation with Mr. Lycurgus L. Johnson, *exclusively;* and that he had no recollection of ever having talked with Mrs. Johnson about the matter until after the death of Mr. L. L. Johnson. All the transactions in regard to this loan were made with Mr. L. L. Johnson, or under his direction. At the time he negotiated the loan of $9,387.95 he executed, jointly with his wife, Mary F Robinson, a deed of trust on certain lands to Mr. L. L. Johnson as trustee, to cover said loan. And in his cross examination on this point he states that he does not think Mrs. Johnson was present at the time the loan was made. Believes she was not present. Mr. Johnson delivered to witness a check for the loan. It was her check, he thinks. Saw from the records in the recorder's office that Mrs. Johnson signed the deed of trust to secure the loan. Referring to the transaction with appellees, he says he was acquainted with the plaintiffs in the case. . . . Part of the lands embraced in the deed of trust were subsequently sold by himself and wife to the plaintiffs in this suit. When he was negotiating the sale with the plaintiffs, which was about a year after he borrowed the money, he told them there was a deed of trust on the land held by Mr. L. L. Johnson. He went with either Christian or Stuart—he does not remember which, possibly either or both—to see Mr Johnson about the matter, and Mr. Johnson agreed with them and himself (Robinson) that, upon the payment to him, acting for Mrs. Johnson, or to Mrs. Johnson herself, of the purchase money agreed upon, he would quitclaim to them the land. The plaintiffs have paid for the land the price agreed upon, which was 120 bales of cotton, 420 or 425 pounds each. The purchase price was all paid in cotton, excepting $1,035, which was paid in money by Mr. W. W. Ford, which sum was the estimated value of some thirty odd bales [379] of cotton, balance then due. The plaintiffs not having the cotton ready, and being anxious to complete their payments and perfect their title to the land, he agreed that the balance of cotton due him might be paid in money, at the market value of cotton at that time. Mr. Ford

made the valuation, and paid the money to Mrs. Johnson for them. In his cross examination on this point he says that the object of the visit of himself with the plaintiffs to see Mr. Johnson was to convince the plaintiffs that upon the payment of the purchase price for the land, they would get a good title to the place. Mr. Johnson agreed that upon the payment of the purchase money for the place he would release any claim that he might have against the property as trustee; he supposed that Mr. Johnson was acting for Mrs. Johnson at that time, as he had been previously and afterwards. In his re-examination he states that he thinks he informed Mr. Johnson of every pound of cotton received from the plaintiffs, directed him how to ship it, and such of the cotton shipped to his own account was shipped with his consent, with the understanding that the proceeds were to be turned over to Mrs. Johnson, or to Mr. Johnson for her.

His testimony as to the payment of the purchase money to Mrs. Johnson, and her acceptance of it as paid in consideration of the land purchased by the appellees under the agreement, is fully corroborated by the testimony of W. W. Ford, who testifies that he was a merchant and near neighbor of Mrs. Johnson, and made out the accounts current, and kept the accounts for Mrs. Johnson. The settlement of Mrs. Johnson as guardian, filed in the probate court, was made out by witness from data furnished by Mrs. Johnson. He also made out the statement of the account marked "Exhibit B." It contains all the items of account between James F. Robinson and Mrs. Julia J. Johnson as guardian of Joel Johnson. There are in that statement four items of credit on said loan that witness can trace to Christian and Stuart as payments on their purchase from Major Robinson, to wit, $431.99, $1,035, $804.53, $1,000. This statement was made out from his own knowledge, and from information furnished by [380] Mrs. Johnson. The item of $1,000 was paid to her by Lycurgus L. Johnson, and repaid to him by cotton from Christian and Stuart, appellees. Credit was indorsed on the note by Mrs. Johnson herself. She told witness he paid it. The item $431.99 was received from Christian and Stuart in cotton, and witness knows she got the money. The $1,035 witness paid for Christian and Stuart. In the spring of 1879 the plaintiffs came to witness and asked him to pay for them the balance on their purchase of the land from Robinson. This amount was settlement in full of balance by Major Robinson with plaintiffs for their land. The valuation of the cotton was made by witness with the consent of Robinson and Christian and Stuart. Witness had told Mrs. Johnson that plaintiffs owed a balance of $1,035 for the purchase money of lands they had purchased from Major Robinson, and that witness was going to pay it for them. She afterwards sent to witness for the money, and he paid it. Plaintiffs gave witness their note for the amount.

Numerous other witnesses sustained the testimony of Robinson and Ford. The appellant only introduced the deposition of his guardian in support of the denials in the answer. Mrs. Johnson denies that she authorized her brother, L. L. Johnson, to transact any business for her with Major Robinson; states that he refused to have anything further to do with the business; that he never acted as her agent as guardian; that she never authorized anyone to make a promise to the plaintiffs that their lands should be released from the deed of trust upon paying the price they had agreed to pay for the same; that if her brother, L. L. Johnson, did receive cotton from plaintiffs it was without her knowledge, and that Mr. Ford never paid any money for plaintiffs on account of said loan.

Upon this testimony we see no grounds for disturbing the decree of the court below. The denial on the part of Mrs. Johnson of her brother's agency, owing to her imperfect conception as to what constitutes an agent and to her vague recollection of her own acts, is contradicted by the facts of which she herself testifies, and by the account marked "Exhibit B," made out under her direction, in which the receipts of the payment by cotton of the appellees [381] are set out, the last of which is the item of $1,035 cash for balance on demand against Stuart and Christian, thus recognizing the receipts of the cotton and the validity of the preceding payments made to her brother, as her agent, and received by herself. Her denial of his authority to make a promise to the plaintiffs that their land should be released from the deed of trust upon their paying the price they had agreed to pay for the same, is contradicted by her subsequent declaration in these words: "I did say to my brother that if these men would pay the $3,000 they should have a deed, *i. e.*, I agreed to it." Upon her testimony alone it is clear that every act of Lycurgus L. Johnson in connection with this transaction, in every stage of its progress, from the loan to Robinson to the payment of the balance of the purchase money due from the appellees, was ratified by her as guardian of appellant.

In a single instance she consented to his action as her agent in respect of her guardianship —reluctantly, she says—but nevertheless consented, and ratified it absolutely and without qualification. No act or contract of his was disavowed by her to the appellees, with whom as her agent he was dealing, and from whom he was collecting payments in her behalf. Not being notified of revocation of his authority as her agent, they were clearly justified in acting upon the presumption of its continuance. Story, Agency, §§ 90, 93; *Hatch* v. *Coddington*, 95 U. S. 48 [24:339]; *Southern L. Ins. Co.* v. *McCain*, 96 U. S. 84 [24:653].

Appellant's counsel contend that the matters set up in the bill could have been pleaded as a defense in the suit of the appellant against them in ejectment; and as there is no averment that appellees were prevented from interposing those matters as a defense in said action by accident of any kind, or by the fraud of appellant, unmixed with any fault or negligence on their part, the bill should have been dismissed.

To this we cannot agree. The principle laid down in the decisions cited in support of the objection is, that a court of equity will not enjoin a judgment at law, unless it is shown that the complainant was prevented from resorting to a legal defense by fraud or unavoidable accident, without any fault or negligence on his [382] part; but that it will do so, if the matters set up in the bill, as a ground of relief, constitute equities unavailable as a defense in the action

at law. In the action of ejectment the issue was squarely upon the plaintiff's legal title. There is nothing in the case to except it from the general rule that in the United States Courts a recovery in ejectment can be had upon the strict legal title only, and that a court of law will not uphold or enforce an equitable title to land as a defense in such action. *Bagnell* v. *Broderick*, 38 U. S. 13 Pet. 436, 450 [10:235, 242]; *Hooper* v. *Scheimer*, 64 U. S. 23 How. 235 [16:452]; *Foster* v. *Mora*, 98 U. S. 425 [25:191]; *Langdon* v. *Sherwood*, 124 U. S. 74, 85 [31:344, 347].

The facts alleged in appellees' bill, for the purpose of showing their equitable title to the land in dispute, could not be set up by them as a plea in the action of ejectment to defeat the strictly legal title of appellant.

It is said that if appellees are obliged to resort to equity to quiet their title, Robinson, their vendor, whose failure to have their payments properly appropriated caused their lands to be sold under the deed of trust previously given by him, should have been made a party to the suit, and called upon to see that the land had been paid for; if not already, that it be paid for now.

We think this position untenable. The answer to it is that the decree which the appellees asked for and was rendered by the court below, granting them the relief sought for, did not undertake to settle, and did not, in effect, settle any rights or liabilities of Robinson, or of any other person not before the court, as a party to the record.

The dealings between Robinson and appellant's guardian, and the rights and obligations growing out of them, are distinct from the question of title between the parties to this suit, and have no connection with it, except as evidence tending to throw light upon that question.

The decree of the court below is affirmed.

---

[53] JAMES A. ROBINSON ET AL., *Plfs. in Err.*,

v.

JAMES G. FAIR.

(See S. C. Reporter's ed. 53-91.)

California Probate Court—authority of—recitals in decree—partition—minor heirs—notice—attorney—civil action.

1. Under the Constitution of California prior to 1880, the probate court could take jurisdiction of a proceeding to partition real estate severing the unity of possession among the heirs.

2. It was the intention of the Legislature of said State to invest probate courts with authority, in connection with, and as ancillary or supplementary to, the settlement and distribution of estates, to make partition of real property.

3. Probate courts being courts of superior jurisdiction, the recitals in their decrees, unless contradicted by the record, will be presumed to be correct; and every intendment will be indulged in their support.

4. An administratrix, who is a widow and heir, by proceeding in probate court, may have a settlement of her accounts as administratrix, and a final adjudication of her rights as heir at law in the estate remaining in her hands.

5. Proper notice to the minor children appears, where the decree recites that due and sufficient notice had been duly given, as required by law, and that the attorney appointed by the court to represent the minor children appeared at the hearing and was present at every step of the proceedings.

6. The particular mode adopted in this case in publishing notice of the proceedings for settlement, distribution, and partition, was sufficient to give the court jurisdiction as to the children.

7. The defense for the minor children in such proceeding could be conducted by an attorney, appointed by the court, under the California Statute.

8. Under the Civil Code of California, probate proceedings are not civil actions.

[No. 18.]

Argued April 9, 10, 1888. Decided Oct. 22, 1888.

IN ERROR to the Circuit Court of the United States for the District of California, to review a judgment for defendant in an action to recover land. *Affirmed.*

The facts are stated in the opinion.

Messrs. **J. C. Bates** and **John A. Campbell**, for plaintiffs in error:

The Constitution of 1863 was in force during the period covering the probate partition proceedings impeached in this case. That constitution provided for a Probate Court by sec. 8, art. VI, for each county, to consist of the County Judge sitting as a Judge of Probate.

The county court as a court of general jurisdiction, and that court, as a court of Probate, are two different courts.

Hynds v. *Imboden*, 5 Ark. 385; *Re Bowen's Will*, 34 Cal. 682; *Smith* v. *Andrews*, 6 Cal. 652; *Clarke* v. *Perry*, 5 Cal. 58; *Swift* v. *Swift*, 40 Cal. 456; *Treat* v. *De Celis*, 41 Cal. 202; *Estate of Burton*, 64 Cal. 428; *Haverstick* v. *Trudel*, 51 Cal. 431; *Estate of Hudson*, 63 Cal. 454.

The statute, authorizing partition proceedings by the Probate Court can only be valid if the constitution has either expressly vested jurisdiction over partition proceedings in the Probate Court, or has authorized the Legislature to do so.

The legislature cannot enlarge the jurisdiction of a Constitutional Court.

Camron v. *Kenfield*, 57 Cal. 550.

Or vest in another court that jurisdiction which the constitution has placed in one designated therein.

Zander v. *Coe*, 5 Cal. 230; *Houghton's Appeal*, 42 Cal. 35; *Willis* v. *Farley*, 24 Cal. 490; *Wilson* v. *Roach*, 4 Cal. 362; *Rosenberg* v. *Frank*, 58 Cal. 402; Cooley, Const. Lim. (3d ed.) 90, note 2.

The Constitution has vested jurisdiction over partition proceedings in the District Court as a Court of Equity by virtue of the grant of jurisdiction in all cases in equity (Cal. Const. Art. VI, sec. 6), where the remedy is sought in equity; and as a Court of Law, under the jurisdiction given of all cases at law which involve the title or possession of real property (Cal. Const. 1863, art. VI, sec. 6); where the remedy is sought in partition proceedings at law.

Actions at law for partition existed at the common law in the case of parceners prior to the reign of Henry VIII; and in that reign the right to a writ of partition was given to tenants in common.

1 Washb. R. Prop. 676; 1 Spence, Eq. Jur. 162; Freeman, Co-tenancy and Partition, sec. 420.

Courts of equity assumed a jurisdiction over partition proceedings based not upon statute, but upon the inadequacy of the legal remedy.

1 Spence, Eq. Jur. 642-654; Freeman, Co-ten-

ancy and Partition, Sec. 423; 1 Fonblanque's Eq. 18, note.

Partition jurisdiction being conferred by the Constitution upon the district court, such jurisdiction was exclusive in that court.

The grant of probate jurisdiction is in these words:

"The County Judges shall also hold in their several counties Probate Court, and perform such duties as Probate Judges as may be prescribed by law."

Cal. Const. 1863, art. VI, sec. 8.

No such powers can be exercised until and except so far as expressly authorized by statute. *Bush* v. *Lindsey*, 44 Cal. 121; *Rosenberg* v. *Frank*, 58 Cal. 402.

Similar clauses have been construed as not empowering the legislature to extend the powers of a Probate Court beyond the proper and established bounds of the established probate jurisdiction, as known to American and English jurisprudence.

Ferris v. *Higley*, 87 U. S. 20 Wall. 375 (22: 383); *Cast* v. *Cast*, 1 Utah, 112; *Locknane* v. *Martin*, McCahon (Kan.) 60; *Moore* v. *Koubly*, 1 Idaho, 55.

Section 8 of art. VI, authorizes the Legislature to confer on the Probate Court probate powers and jurisdiction, and those only.

Partition is not a part of the probate jurisdiction derived from England and exercised in America by Probate or Surrogate Courts.

Payne's Will, 4 T. B. Mon. 422; Toller's Law of Executors, 67, 80, 490, 491; *Re Eakin's Estate*, 20 N J. Eq. (5 C. E. Green) 481; *Davenport* v. *Caldwell*, 10 S. C. 317.

The constitutional grant of jurisdiction over all matters testamentary and of administration is identical with a grant of probate jurisdiction.

Smith v *Craig*, 10 Smedes & M. 447.

Partition is not analogous to and is not a legitimate extension of the process of distribution.

The executors and administrators are and ever have been officers of the court.

Toller's Law of Exrs. and Admrs. 82, 114, 241, 369, 401.

They exercise a power over the estate under the direction of the court.

Id. 33, 46, 75, 95, 100

The executor and administrator have a mere custody for the purpose of administration.

Id. 133, 241, 255, 256.

In a Probate Court, the decree of distribution neither gives, creates, nor transfers any rights of property.

Distribution gives to the distributee no new title to the property, but only ascertains the property to which his title shall attach as heir at law of the deceased.

Thompson v. *Thomas*, 30 Miss. 152, 158; *Ferrie* v. *Public Admr.* 3 Bradf. 249; *Hayward* v. *Hayward*, 20 Pick. 517; *Kingsbury* v. *Scovill*, 26 Conn. 349; *Foster* v. *Fifield*, 20 Pick. 67; *Mills* v. *Marshall*, 8 Ind. 54; *Adams* v. *Adams*, 10 Met. 170.

Partition is a proceeding issuing in a judgment transferring property.

Freeman, Co-tenancy and Partition, secs. 83, 250, 290, 347, 251, 298, 299, 274, 276, 276.

At common law, a voluntary partition could only be accomplished in the manner required for the conveyance of landed estate.

Freeman, Co-tenancy and Partition, secs. 396, 402; Co. Litt. 169 a; Allnatt on Partition, 124-129.

The exercise of jurisdiction over wills of real estate does not enlarge the probate jurisdiction.

Williams on Exrs. 6th Am. ed. 454, 388, 389.

The power exercised by probate courts to partition, wherever it exists is based on statute.

Alabama; Laws of Ala. 1823, p. 333, sec. 43, Ala. Code, 1852, sec. 670; Rev. Code Ala. 1867, sec. 3105; *Bryant* v. *Stearns*, 16 Ala. 307; *Coker* v. *Pitts*, 37 Ala. 692.

Connecticut; Stat. of Conn. 1838, p. 234, Tit. 31, Ch. 1, sec. 29; Stat. of Conn. 1854, p. 502, sec. 53; *Gates* v. *Treat*, 17 Conn. 388;

Indiana; Rev. Stat. 1843, pp. 811, 812, secs. 114, 115, 116; Rev. Stat. Ind. 1881, secs. 1186, 1187; *Shull* v. *Kennon*, 12 Ind. 34; *Bennet* v. *East*, 7 Ind. 174.

Louisiana; *Hooke* v. *Hooke*, 6 La. 420.

Maine; Smith's Laws of Me., Vol. 1, p. 239, Ch. 50, secs. 31, 38; Rev. Stat. Me. 1840-41, p. 449, Ch. 108, sec. 1; Rev. Stat. 1883; p. 550, secs. 8, 9; *Earl* v. *Rowe*, 35 Me. 421.

Massachusetts; Provincial Stat. Mass. 1752, Ancient Charter, 594; Stat. Mass. 1817, Ch. 190, Gen. Stat. Mass. 1860, p. 490, § 14, p. 703, §§ 48, 65.

All the authority which the judge of probate has, upon this subject, is derived from the Statute of 1817, chap. 190.

Wainwright v. *Dorr*, 13 Pick. 335; *Arms* v. *Lyman*, 5 Pick. 211; *Sigourney* v. *Sibley*, 21 Pick. 101; *Bemis* v. *Stearns*, 16 Mass. 200; *Jenks* v. *Howland*, 3 Gray, 536; *Gordon* v. *Pearson*, 1 Mass. 323.

Mississippi; Stat. Laws of Miss. (Howard and Hutchinson's), p. 412, § 89, p. 471, § 14; *Smith* v. *Craig*, 10 Smedes & M. 447; *Currie* v. *Stewart*, 26 Miss. 649; *Lum* v. *Reed*, 53 Miss. 77.

New Hampshire: Comp. Stat. N. H. p. 393, § 6; *Kelly* v. *Kelly*, 41 N. H. 501.

New Jersey: Laws of N. J. 1821, p. 780, § 13; Dixon's Dig. Laws of N. J. 668, § 10; *Den ex dem. Richman* v. *Baldwin*, 21 N. J. L. (1 Zab.) 395; *Curtis* v. *Jenkins*, 20 N. J. L. (1 Spencer) 679.

Pennsylvania: 1 Brightly's Purd. Dig. Laws of Pa. 1700-1872, p. 433, § 138; *Bishop's Appeal*, 7 Watts & S. 251; *Selfridge's Appeal*, 9 Watts & S. 55; *Re Gardiner's Estate*, 4 Pa. 502.

Tennessee: The County Court has jurisdiction of the probate of wills.

Code Tenn. 1858, § 2169; Stat. Tenn. 1831, § 2169; Heywood & Cobb's Revision, p. 103, § 47.

The County, Circuit and Chancery Courts have concurrent jurisdiction.

Stats. Tenn. 1831, Revision, Haywood & Cobb's, 244; Tenn. Code, 1858, § 3266; *Wilcox* v. *Cannon*, 1 Cold. 369.

Vermont: Laws of Vt. 1824, pp. 349, 350, §§ 79, 83; Rev. Laws Vt. 1880, §§ 2252-2260; *Grice* v. *Randall*, 23 Vt. 243.

Wisconsin: Rev. Stat. Wis. 1849, pp. 380-382; 1858, 605-607; 1878, §§ 3942-3955.

Minnesota: Stat. of Minn. 1851, p. 260, § 5; 1878, p. 597, § 6.

South Carolina: Stat. S. Car. Vol. II, p. 64, § 26 (Stat. 1839-1849); Stat. S. Car. Vol. 5, p. 248 (Stat. 1814-1838); Rev. Stat. S. C. p. 573, § 41; *Faust* v. *Bailey*, 5 Rich. L. 110; *Davenport* v. *Caldwell*, 10 S. C. 317; *Gates* v. *Irick*, 2 Rich. L. 593.

Mr. **Samuel M. Wilson,** for defendant in error:

The Probate Courts of California in 1875 had jurisdiction, as ancillary to the settlement of the estates of deceased persons, to partition the real property among the heirs or other distributees.

Stat. of Cal. 377; Stat. of Cal. of 1851, 448, 481, 482, 483; art. VI, § 6, of the Const. of Cal. in force in 1875.

In England, the common law courts had jurisdiction to partition estates held by coparceners.

1 Reeve's Hist. 2d ed. (Dublin), 312; Finalson's ed. 335, citing Bracton, 71 b to 77 b; Dublin ed. of 1787, p. 312; Roscoe's Treatise on the Law of Actions, 130; Co. Litt. 175 a, 167 a; Allnatt on Partition, 54, 55; Bac. Ab. Tit. Joint-Tenants, (I); Freeman on Cotenancy and Partition, § 420 *et seq.*

The modes of proceeding in partition cases in the common-law courts, are fully detailed by the following authorities:

Allnatt on Partition, 65, 70; Booth on Real Actions, 244, 245; 2 Cruise, 285; Petersdorf's Ab. Tit. Partition; Littleton, §§ 247, 248; Chitty's Pl. 1390–1407; Bac. Ab. Joint-Tenants 1, and Freeman on Cotenancy and Partition, § 422.

The jurisdiction of the courts of common law and chancery are concurrent.

Mitford, Eq. Pl. by Jeremy, 120; 1 Story's Eq. Juris. § 650, *et seq.; Strickland* v. *Strickland*, 6 Beav. 77; *Agar* v. *Fairfax*, 17 Ves. Jr. 551; *Watson* v. *Duke of Northumberland*, 11 Ves. Jr. 153.

The jurisdiction granted the District Court in equity cases did not prohibit the Legislature from investing the Probate Courts with jurisdiction to partition the estates of deceased persons among the heirs.

Zander v. *Coe*, 5 Cal. 230; *Courtwright* v. *Bear River & A. W. & M. Co.* 30 Cal. 577; *Rosenberg* v. *Frank*, 58 Cal. 402, 403; *Caulfield* v. *Stevens*, 28 Cal. 118; *Yolo County* v. *Sacramento*, 36 Cal. 195; *Stoppelkamp* v. *Mangeot*, 42 Cal. 324, 325.

The jurisdiction of the Probate Court over the estates of deceased persons is plenary.

Auguisola v. *Arnaz*, 51 Cal. 438; *Rosenberg* v. *Frank*, 58 Cal. 402; *Clarke* v. *Perry*, 5 Cal. 60; *Belloc* v. *Rogers*, 9 Cal. 129; *Deck* v. *Gerke*, 12 Cal. 436; *Walls* v. *Walker*, 37 Cal. 426; *Estate of Hinckley*, 58 Cal. 457; *De Castro* v. *Barry*, 18 Cal. 96.

The jurisdiction of Probate Courts is widely exercised in the States of the Union.

Bryant v. *Stearns*, 16 Ala. 302; *Coker* v. *Pitts*, 37 Ala. 692; *Gates* v. *Treat*, 17 Conn. 389; *Shull* v. *Kennon*, 12 Ind. 34; *Bennet* v. *East*, 7 Ind. 175; *Mason* v. *Mason*, 12 La. 589; *Badon* v. *Foucher*, 15 La. 455; *Hooke* v. *Hooke*, 6 La. 420; *Potter* v. *Webb*, 2 Me. 257; *Earl* v. *Rowe*, 35 Me. 415; *Cogswell* v. *Reed*, 12 Me. 198; *Dean* v. *Hooper*, 31 Me. 107; *Furlong* v. *Soule*, 39 Me. 123; *Pierce* v. *Irish*, 31 Me. 254; *Clark* v. *Pishon*, Id. 503; *Potter* v. *Hazard*, 11 Allen, 187; *Wainwright* v. *Dorr*, 13 Pick. 333; *Arms* v. *Lyman*, 5 Pick. 211; *Sigourney* v. *Sibley*, 21 Pick. 101; *Bemis* v. *Stearns*, 16 Mass. 200; *Jenks* v. *Howland*, 3 Gray, 536; *Gordon* v. *Pearson*, 1 Mass. 323; *Gaines* v. *Smiley*, 7 Smedes & M. 53; *Campbell* v. *Wallace*, 12 N. H. 362; *Kelly* v. *Kelly*, 41 N. H. 501; *Den, ex dem. Richman*, v. *Baldwin*, 21 N. J. L. (1 Zab.) 395; *Curtis* v. *Jenkins*, 20 N. J. L. (1 Spencer) 679; *State* v. *Mayhew*, 9 N. J. L. (4 Hals.) 70; *Mehaffy* v. *Dobbs*, 9 Watts, 363; *Bishop's Appeal*, 7 Watts & S. 251; *Hise* v. *Geiger*, 7 Watts & S. 273; *Groff* v. *Groff*, 14 Serg. & R. 188; *Selfridge's Appeal*, 9 Watts & S. 55; *McPherson* v. *Cunliff*, 11 Serg. & R. 422; *Bavington* v. *Clarke*, 2 Pen. & W. 115; *Re Gardiner's Estate*, 4 Pa. 502; *Herr* v. *Herr*, 5 Pa. 428; *Eell's Estate*, 6 Pa. 457; *Painter* v. *Henderson*, 7 Pa. 48; *Lair* v. *Hunsicker*, 28 Pa. 115; *Ihmsen* v. *Ormsby*, 32 Pa. 198; *Merklein* v. *Trapnell*, 34 Pa. 42; *Snyder's Appeal*, 36 Pa. 166; *Dresher* v. *Allentown Water Co.* 52 Pa. 225; *Harlan* v. *Langham*, 69 Pa. 235; *McClure* v. *McClure*, 14 Pa. 134; *Wilcox* v. *Cannon*, 1 Cold. 369; *Grice* v. *Randall*, 23 Vt. 242; *Gillett* v. *Treganza*, 13 Wis. 472; *Tryon* v. *Farnsworth*, 30 Wis. 577; *Simpson* v. *Cook*, 24 Minn. 180; *Tompkins* v. *Tompkins*, 1 Story, C. C. 547; *Shaw* v. *Shaw*, 4 Cranch, C. C. 715; *Lewis* v. *Pratt*, 2 Whart. 81; *Hubbard* v. *Rickart*, 3 Vt. 207; *Vick* v. *Vicksburg*, 1 How. (Miss.) 444.

The statutes of California investing Probate Courts with jurisdiction to partition estates among the heirs or other distributees, are not in violation of the Constitution of the State.

Meeks v. *Olpherts*, 100 U. S. 564 (25:735); *Meeks* v. *Vassault*, 3 Sawy. 206, and cases cited; *Cunningham* v. *Ashley*, 45 Cal. 485; *Meeks* v. *Hahn*, 20 Cal. 621; *Meeks* v. *Kirby*, 47 Cal. 168; *Chapman* v. *Hollister*, 42 Cal. 462; *Burton* v. *Lies*, 21 Cal. 91.

The power of the Legislature over the subject of descents and successions is absolute.

State v. *Smith*, 70 Cal. 155; *Lyons* v. *State*, 67 Cal. 380; *Carrasco* v. *State*, Id. 385; *People* v. *Rogers*, 13 Cal. 165.

Notice was published once a week for four successive weeks.

Sec. 1705, Code of Civil Pro.

The decree shows that proof of notice was made to the satisfaction of the court. The decree is conclusive evidence of this jurisdictional fact.

McClellan v. *Downey*, 63 Cal. 523; *Re Sharboro's Estate*, 70 Cal. 147; *Re Palomares' Estate*, 63 Cal. 402; *Dean* v. *Superior Ct.* Id. 477; *Wiggin* v. *Superior Ct.* 68 Cal. 400.

The Code in its provisions relating to probate proceedings in section 1718 requires the court to appoint some competent attorney at law to represent in all such proceedings all devisees, heirs, etc., who are minors and have no general guardian.

Sec. 1307, C. C. P.

Had the appointment of a guardian *ad litem* been required, the failure to do so would have been a mere irregularity, to be reached on an appeal, but not rendering the proceeding void when attacked collaterally.

Freeman on Judgments, § 151; *Simmons* v. *McKay*, 5 Bush, 25; *Montgomery* v. *Carlton*, 56 Tex. 365; *Beeler* v. *Bullitt*, 3 A. K. Marsh. 280; *Barber* v. *Taylor*, 9 Dana, 87; *Austin* v. *Charlestown Female Seminary*, 8 Metc. 196; *Bloom* v. *Burdick*, 1 Hill (N. Y.) 131; *Barber* v. *Graves*, 18 Vt. 293.

The proceedings of the commissioner were in exact compliance with the law.

Secs. 1683, 1684, C. C. P.

The infant heirs had no guardian. The court, therefore, under section 1718, C. C. P., appointed the attorney to represent the minors.

The court had the discretion to adopt the mode of proceeding prescribed under chap. XI, C. C. P.

The objection only goes to a question of error not to be reviewed collaterally in this action.

Partition in probate proceedings is only ancillary to the settlement of the estate, and is not intended to be made between any others than the heirs or devisees of the decedent.

Sec. 1675, C. C. P.; Freeman on Co-tenancy & Partition, § 553.

A decree or judgment in partition has no other effect than to sever the unity of possession, and does not vest in either of the co-tenants any new or additional title.

Wade v. *Deray*, 50 Cal. 380; *Mound City L. & W. Asso.* v. *Philip*, 64 Cal. 495.

In decrees of partition in the Probate Court, no deed of release of their several proportions by one heir or devisee to another is required.

1 Washburn on Real Property, 586; Freeman on Co-tenancy & Partition, § 427; *Freeman* v. *Rahm*, 58 Cal. 114; *Wright* v. *Marsh*, 2 G. Greene (Iowa) 110; 1 Story's Eq. Jur. § 652; *Re Garraud's Estate*, 36 Cal. 277.

[54] *Mr. Justice* **Harlan** delivered the opinion of the court:

This case involves the title to a fifty-vara lot in the City of San Francisco, numbered two hundred and five on its official map. It was a part of the separate estate of Horace Hawes, Senior, who died, intestate, in that city, on March 12, 1871, leaving as his only heirs at law, his widow Caroline Hawes, and two minor children, Horace Hawes, Junior, born March 22, 1859, and Caroline C. Hawes, born August 26, 1864. In December, 1871, the widow qualified as administratrix in the Probate Court of the City and County of San Francisco. In that capacity she took possession, as was her duty under the law of California, of the entire estate of her deceased husband, and held it subject to the control of that court. Civil Code, § 1384; Code of Civil Procedure, § 1581.

In addition to the above lot, the intestate was the owner, at the time of his death, of a large amount of property, principally real estate, in the Counties of San Francisco and San Mateo, some of which was community property, and the residue separate property. By the law of California, upon the death of the husband, intestate, one half of the community property goes to the surviving wife, and the other to his descendants equally, or, in the absence of descendants, according to the right of representation, and in the same manner as the separate property of the husband; and upon the death of the husband, leaving a widow and more than one child living, or the lawful issue of one or more deceased children, one third of his estate, not otherwise limited by marriage contract, goes to the widow, and the remainder in equal shares to his children and to the lawful issue of any deceased child by right of representation. Civil Code, §§ 163, 164, 687, 1386, 1402.

The estate was divided by proceedings commenced, February, 18, 1875, by Mrs. Hawes, administratrix; in the Probate Court of the City and County of San Francisco. They were instituted for the purpose of obtaining a final settlement of her accounts, and also the distribution and the partition of the estate. Such a settlement was had, and, after a decree of distribution was passed, the court proceeded to made partition between the heirs according to their respective interests of the various parcels of real estate remaining in the hands of the administratrix. By the final decree of partition, rendered April 19, 1875, certain property, including the above lot, was set apart to the widow, while other lands in that county, and in San Mateo County, were allotted to the children. [55]

By deed of May 24, 1875, and for the consideration of three hundred thousand dollars, the widow conveyed the above lot to James C. Flood. The latter was in possession under his purchase until August 21, 1876, when he sold and conveyed, for a like sum, to James G. Fair, who, prior to the present litigation, put upon the lot substantial improvements of the value of several hundred thousand dollars.

On the 6th of April, 1881, Caroline C. Hawes intermarried with James A. Robinson, who had previously, February 24, 1881, qualified as her guardian.

The present suit was brought, June 6, 1882, in the names of Mrs. Robinson, by her husband as guardian, and Horace Hawes, Junior, to recover two undivided thirds of said fifty-vara lot. In the progress of the cause Mrs. Robinson was joined with her brother as an original plaintiff in her own right. The defendant claimed title under the decree of partition in the Probate Court. That decree, the plaintiffs insisted, was void. A jury having been waived, there was judgment for the defendant, the court below holding that the proceedings in the Probate Court were in conformity, in all respects, with law.

The principal assignment of error is, that, under the Constitution of California prior to 1880 the Probate Court could not take jurisdiction of a proceeding to partition real estate. It is contended that its control over the estate ceased when it approved the final settlement, and, by a decree of distribution, defined the nature and extent of the interests of the heirs in the remaining estate of the decedent. A partition severing the unity of possession among the heirs, and investing each with a right, as against the others, to the exclusive possession and ownership of distinct parts of the estate, could not, it is insisted, have been constitutionally effected by proceedings in a Probate Court. These questions have received the most careful consideration, as well because of their intrinsic importance, as because their determination by this court, as we are informed by counsel, may seriously affect the title to large bodies of land in California.

Tracing the course of legislation in California [77] in reference to the jurisdiction and powers of the Probate Courts of that State, we find that the first statute upon the subject is that of April 22, 1850, entitled "An Act to Regulate the Settlement of the Estate of Deceased Persons." Stat. Cal. 1850–53, c. 129, p. 377. Another statute was passed May 1, 1851, having a similar title, and covering the same subject. Compiled Laws Cal. 1850, c. 120, pp. 377 to 423.

The provisions of these statutes relating to proceedings in the Probate Courts for the final settlement, distribution, and partition of estates were continued without material change, and the powers of those courts enlarged, by the Code of Civil Procedure. The sections of the Code bearing upon the question of the jurisdiction and powers of those courts are too numerous to be incorporated in this opinion. It is sufficient to say that upon a careful examination of them, we are of opinion that it was the intention of the Legislature to invest Probate Courts with authority, in connection with, and as ancillary or supplementary to the settlement and distribution of estates, to make partition of real property—where the title of the deceased owner and the heirship of the parties are undisputed—so as to invest each heir with a separate title to the particular part or parts allotted to him by the decree of partition. No other interpretation is consistent with the words of the Code. §§ 1581, 1634, 1665, 1666, 1668, 1675, 1676 to 1686, *inclusive*.*

Does the State Constitution prohibit the partition of real estate by proceedings in a Probate Court? The contention of the plaintiffs is that exclusive original jurisdiction of such proceedings is given to district courts, and that partition is foreign to the probate system as recognized in that instrument.

By the Constitution of California, in force at the time partition was made of the estate in question, the judicial power of the State was "vested in a Supreme Court, in District Courts, in County Courts, in Probate Courts, and in Justices of the Peace, and in all such Recorders' and other inferior courts as the Legislature may establish in any incorporated city or town;" and the supreme court, the district, county, probate, and such other courts as the Legislature should prescribe, were declared to be courts of record. Const. of 1849, amended in 1862, art. VI, §§ 1, 9. The supreme court is invested with appellate jurisdiction in all cases in equity; in all cases at law involving the title or possession of real estate, or the legality of any tax, impost, assessment, toll or municipal fine, or in which the demand, exclusive of interest, or the value of the property in controversy, amounts to three hundred dollars; in all cases arising in the probate courts; and in all criminal cases amounting to felony, or questions of law. It also has "power to issue writs of mandamus, *certiorari*, prohibition, and *habeas corpus*, and also all writs necessary or proper to the complete exercise of its appellate jurisdiction." *Id.* § 4. [78]

The Constitution of 1849 provided that the District Courts "shall have original jurisdiction in law and equity in all civil cases where the amount in dispute exceeded two hundred dollars, exclusive of interest. In all criminal cases not otherwise provided for, and in all issues of fact joined in the Probate Courts,

* Following are copies of sections referred to [Ed.]

Sec. 1581. The executor or administrator must take into his possession all the estate of the decedent, real and personal, and collect all debts due to the decedent or to the estate. For the purpose of bringing suits to quiet title, or for partition of such estate, the possession of the executors or administrators is the possession of the heirs or devisees; such possession by the heirs or devisees is subject, however, to the possession of the executor or administrator, for the purposes of administration, as provided in this title.

Sec. 1634. If the account mentioned in the preceding section be for a final settlement, and a petition for the final distribution of the estate be filed with said account, the notice of the settlement must state those facts, which notice must be given by posting or publication, as the court may direct, and for such time as may be ordered. On the settlement of said account, distribution and partition of the estate to all entitled thereto may be immediately had, without further notice or proceedings. [Amendment, approved March 11, 1876; Amendments 1875-6, 104; took effect ninety days after passage.]

Sec. 1665. Upon the final settlement of the accounts of the executor or administrator, or at any subsequent time, upon the application of the executor or administrator, or of any heir, legatee or devisee, the court must proceed to distribute the residue of the estate in the hands of the executor or administrator, if any, among the persons who by law are entitled thereto; and if the decedent has left a surviving child, and the issue of other children, and any of them, before the close of administration, have died while under age and not having been married, no administration on such deceased child's estate is necessary, but all the estate which such deceased child was entitled to by inheritance must, without administration, be distributed to the other heirs at law. A statement of any receipts and disbursements of the executor or administrator, since the rendition of his final accounts, must be reported and filed at the time of making such distribution, and a settlement thereof, together with an estimate of the expenses of closing the estate, must be made by the court and included in the order or decree; or the court or judge may order notice of the settlement of such supplementary account, and refer the same as in other cases of the settlement of accounts.

Sec. 1666. In the order or decree, the court must name the persons and the proportions or parts to which each shall be entitled, and such persons may demand, sue for, and recover their respective shares from the executor or administrator, or any person having the same in possession. Such order or decree is conclusive as to the rights of heirs, legatees, or devisees, subject only to be reversed, set aside, or modified on appeal.

Sec. 1668. The order or decree may be made on the petition of the executor or administrator, or of any person interested in the estate. Notice of the application must be given by posting or publication, as the court may direct, and for such time as may be ordered. If partition be applied for, as provided in this chapter, the decree of distribution shall not divest the court of jurisdiction to order partition, unless the estate is finally closed. [Amendment approved March 24th, 1874; Amendments 1873-1874, 373; took effect July 1, 1874.]

Sec. 1675. When the estate, real or personal, assigned by the decree of distribution to two or more heirs, devisees, or legatees, is in common and undivided, and the respective shares are not separated and distinguished, partition, or distribution, may by made by three disinterested persons, to be appointed commissioners for that purpose by the probate court or judge, who must be duly sworn to the faithful discharge of their duties. A certified copy of the order of their appointment, and of the order or decree assigning and distributing the estate, must be issued to them as their warrant, and their oath must be indorsed thereon. Upon consent of the parties or when the court deems it proper and just, it is sufficient to appoint one commissioner only, who has the same authority and is governed by the same rules as if three were appointed.

Sec. 1676. Such partition may be ordered and had in the probate court, on the petition of any person interested. But before commissioners are appointed or partition ordered by the probate court as directed in this chapter, notice thereof must be given to all persons interested who reside in this State, or to their guardians, and to the agents, attorneys, or guardians, if any in this State, of such as reside out of the State, either personally or by public notice, as the probate court may direct. The petition may be filed, attorneys, guardians, and agents appointed, and notice given, at any time before the order or decree of distribution, but the commissioners must not be appointed until the order or decree is made distributing the estate.

Sec. 1677. If the real estate is in different counties, the probate court may, if deemed proper, appoint a commissioner for all, or different com-

their jurisdiction shall be unlimited." Const. 1849, art. VI, § 6. But in 1862 the Constitution was amended, and in lieu of that section the following was substituted: "The District Courts shall have original jurisdiction in all cases in equity; also, in all cases at law which involve the title or possession of real property, or the legality of any tax, impost, assessment, toll, or municipal fine, and in all other cases in which the demand, exclusive of interest or the value of the property in controversy, amounts to three hundred dollars; and also in all criminal cases not otherwise provided for. The District Courts and their judges shall have power to issue writs of *habeas corpus*, on petition by or on behalf of any person held in actual custody, in their respective districts." Const. 1862, art. VI, § 6.

The Constitution of 1849, also, provided for the election of a county judge in each organized county, who "shall hold the county court, and perform the duties of surrogate or probate judge," and with two justices of the peace, "shall hold Courts of Sessions, with such criminal jurisdiction as the Legislature shall prescribe; and he shall perform such other duties as shall be required by law." It was further provided that "the County Courts shall have such jurisdiction in cases arising in justices' courts, and in special cases, as the Legislature may prescribe, but shall have no original civil jurisdiction except in such special cases." Const. 1849, art. VI, §§ 8 and 9. But by the Amendments of 1862 the powers and jurisdiction of County Courts were greatly enlarged, as will be seen from the following section adopted in lieu of those just cited: "§ 8. The County Courts shall have original jurisdiction of actions of forcible entry and detainer, of proceedings in insolvency, of actions to prevent or abate a nuisance, and of all such special cases and proceedings as are not otherwise provided for; and also such criminal jurisdiction as the Legislature may prescribe; they shall also have appellate jurisdiction in all cases arising in courts held by justices of the peace and recorders, and in such inferior courts as may be established in pursuance of section 1 of this article, in their respective counties. The county judges shall also hold in their several counties Probate Courts, and perform such duties as probate judges as may be prescribed by law. The County Courts and their judges shall also have power to issue writs of *habeas corpus*, on petition by or on behalf of any person in actual custody in their respective counties."

79]

The argument in behalf of the plaintiffs, briefly stated, is that the Legislature could not confer upon County Courts jurisdiction of

missioners for each county. The estate in each county must be divided separately among the heirs, devisees, or legatees, as if there was no other estate to be divided; but the commissioner first appointed must, unless otherwise directed by the probate court, make division of such real estate, wherever situated within this State.

Sec. 1678. Partition or distribution of the real estate may be made as provided in this chapter, although some of the original heirs, legatees, or devisees may have conveyed their shares to other persons and such shares must be assigned to the person holding the same, in the same manner as they otherwise would have been to such heirs, legatees, or devisees.

Sec. 1679. When both distribution and partition are made, the several shares in the real and personal estate must be set out to each individual in proportion to his right, by metes and bounds, or description, so that the same can be easily distinguished, unless two or more of the parties interested consent to have their shares set out so as to be held by them in common and undivided.

Sec. 1680. When the real estate cannot be divided without prejudice or inconvenience to the owners, the probate court may assign the whole to one or more of the parties entitled to share therein who will accept it, always preferring the males to the females, and among children preferring the elder to the younger. The parties accepting the whole must pay to the other parties interested their just proportion of the true value thereof, or secure the same to their satisfaction, or, in case of the minority of such party then to the satisfaction of his guardian, and the true value of the estate must be ascertained and reported by the commissioners. When the commissioners appointed to make partition are of the opinion that the real estate cannot be divided without prejudice or inconvenience to the owners, they must so report to the court, and recommend that the whole be assigned as herein provided, and must find and report the true value of such real estate. On filing the report of the commissioners, and on making or securing the payment as before provided, the court, if it appears just and proper, must confirm the report, and thereupon the assignment is complete, and the title to the whole of such real estate vests in the person to whom the same is so assigned.

Sec. 1681. When any tract of land or tenement is of greater value than any one's share in the estate to be divided, and cannot be divided without injury to the same, it may be set off by the commissioners appointed to make partition to any of the parties who will accept it, giving preference as prescribed in the preceding section. The party accepting must pay or secure to the others such sums as the commissioners shall award to make the partition equal, and the commissioners must make their award accordingly; but such partition must not be established by the court until the sums awarded are paid to the parties entitled to the same, or secured to their satisfaction.

Sec. 1682. When it appears to the court from the commissioners' report, that it cannot otherwise be fairly divided, and should be sold, the court may order the sale of the whole or any part of the estate, real or personal, by the executor or administrator, or by a commissioner appointed for that purpose, and the proceeds distributed. The sale must be conducted, reported, and confirmed in the same manner and under the same requirements provided in Article IV, Chapter VII of this title. [See *ante*, 11, 536, Sec. 1536.]

Sec. 1683. Before any partition is made or any estate divided, as provided in this chapter, notice must be given to all persons interested in the partition, their guardians, agents or attorneys, by the commissioners, of the time and place when and where they shall proceed to make partition. The commissioners may take testimony, order surveys, and take such other steps as may be necessary to enable them to form a judgment upon the matters before them.

Sec. 1684. The commissioners must report their proceedings, and the partition agreed upon between them, to the probate court, in writing and the court may, for sufficient reasons, set aside the report and commit the same to the same commissioners, or appoint others; and when such report is finally confirmed, a certified copy of the judgment or decree of partition made thereon, attested by the clerk, under the seal of the court, must be recorded in the office of the recorder of the county where the lands lie.

Sec. 1685. When the probate court makes a judgment or decree assigning the residue of any estate to one or more persons entitled to the same it is not necessary to appoint commissioners to make partition or distribution thereof, unless the parties to whom the assignment is decreed, or some of them, request that such partition be made.

Sec. 1686. All questions as to advancements made, or alleged to have been made, by the decedent to his heirs, may be heard and determined by the probate court, and must be specified in the decree assigning and distributing the estate; and the final judgment or decree of the probate court, or, in case of appeal, of the supreme court, is binding on all parties interested in the estate.

suits or matters of which original jurisdiction is given by the Constitution to District Courts; that whether a proceeding for partition be regarded as a case in equity, or a case at law involving the title or possession of real property, it is within the original, and, therefore, exclusive jurisdiction of a District Court; and that the provision requiring county judges to hold "Probate Courts," and "perform such duties as probate judges as may be prescribed by law," did not authorize the Legislature to invest Probate Courts with jurisdiction, concurrent with District Courts, in cases of which the latter were, by express words, given original jurisdiction. It must be confessed that some support for this position is found in the general language employed in *Zander* v. *Coe*, 5 Cal. [80] 230; *People* v. *Fowler*, 9 Cal. 85; and *Caulfield* v. *Stevens*, 28 Cal. 118. In *Zander* v. *Coe*, the court proceeded upon the ground that the Legislature could not confer on one court the functions and powers which had been conferred by the Constitution upon another court. In *People* v. *Fowler*, 9 Cal. 85—where the question was as to the constitutionality of a statute giving an appeal to the court of sessions from a judgment in a criminal case tried in a justice's court—the court, referring to *Zander* v. *Coe*, and previous cases, said: "The rule of construction established by these decisions is this: That when certain powers are, in *form*, *affirmatively*, bestowed on certain courts, they are still *exclusive*, unless there be some exception specified in the Constitution itself, or the power to prescribe the cases to which the jurisdiction should extend be expressly given to the Legislature. For example: there is affirmatively conferred upon the District Courts certain original jurisdiction in civil cases, and there is no specified exception stated, and no power expressly given to the Legislature either to limit or increase this jurisdiction; therefore it is, as to the class of cases enumerated, *exclusive*."

In *Caulfield* v. *Stevens*, 28 Cal. 118, the court declared to be unconstitutional an Act empowering justices of the peace to try actions for forcible entry, or forcible or unlawful detainer. Its validity was attempted to be maintained under the general grant to the Legislature of power to fix by law the "powers, duties and responsibilities" of justices of the peace. Const. 1862, art. VI. § 9. But the court held that the subject of forcible entries and of forcible and unlawful detainers was expressly committed by the Constitution to County Courts, and that the Act there in question was unconstitutional. Whether the court had in view the rule of constitutional construction announced in *Zander* v. *Coe*, and *People* v *Fowler*, it is impossible to say; for no reference is made to either case. As pointed out in *Courtwright* v. *Bear River & A. W. & M. Co.* 30 Cal. 574, the decision in *Caulfield* v. *Stevens* went beyond what was necessary to be decided; it might have been rested entirely upon the ground that the Constitution, in terms, invested county [81] courts, declared to be courts of record, with original jurisdiction of actions of forcible entry and detainer, and the authority of the Legislature to fix by law the powers, duties, and responsibilities of justices of the peace was burdened with the condition that "such powers shall not, in any case, trench upon the jurisdiction of the several courts of record." § 9.

Prior to *Caulfield* v. *Stevens*, there were two decisions in the state court which seem to rest upon a different rule of constitutional construction. *Estate of De Castro* v. *Barry*, 18 Cal. 97; and *Perry* v. *Ames*, 26 Cal. 372, 382. The first one was a suit for partition. It was brought in a probate court under section 264 of the Probate Act of 1851 (Compiled Laws of Cal. 1850-'3, p. 415), providing that "Partition of the real estate may be made as provided in this chapter, although some of the original heirs or devisees may have conveyed their shares to other persons, and such shares shall be assigned to the person holding the same, in the same manner as they otherwise should have been to such heirs or devisees." That section—the words "or distribution" being added after "partition," and "legatees" after "heirs"—is incorporated into the Code of Civil Procedure, § 1678. In that case the point was made that the Probate Court had no jurisdiction, because the petitioners were not heirs or devisees, and, therefore, not entitled to sue in the form adopted. But the jurisdiction of the Probate Court was sustained, on the ground that the statute placed alienees upon the same footing as the original heirs or devisees. While the authority of the Probate Court was not assailed upon the ground now asserted—namely, that the court could not, under the Constitution, entertain jurisdiction of a suit for partition—that question was necessarily involved in the case; and the decree, which was affirmed, should have been reversed, if it be true that the jurisdiction of the Probate Court, in cases of partition could not be made concurrent with that of the District Courts. In *Perry* v. *Ames* the question was as to the jurisdiction of District Courts, under the State Constitution as amended in 1862, in cases of mandamus. It was contended that the Supreme Court alone could issue a writ of mandamus, because upon that court had been conferred, in terms, power "to issue writs of [82] mandamus, *certiorari*, prohibition, and *habeas corpus*, and also all writs necessary or proper to the complete exercise of its appellate jurisdiction," while no such power was expressly conferred upon the District Courts. It was decided that although the Supreme Court had been invested, in terms, with original jurisdiction in cases of mandamus, the District Courts had the same power, in respect to that species of remedy, by virtue of the general grant to them of jurisdiction in all civil cases in equity and in certain specified cases at law.

But the fullest discussion as to the general question is to be found in *Courtwright* v. *Bear River & A. W. & M. Co.*, above cited. The principal point there was whether a district court could take jurisdiction of an action in equity to abate a nuisance. The latter court held that it could not, for the reason that original jurisdiction of an action to prevent or abate a nuisance is expressly granted to county courts. art. VI. § 8. But it was adjudged by the Supreme Court of the State that the jurisdiction of County Courts of such actions was only concurrent with that of District Courts—the latter having original jurisdiction of suits to abate nuisances under the general grant to them

of jurisdiction in cases in equity. It was held that while the Constitution expressly provides that the powers conferred upon justices of the peace "shall not in any case trench upon the jurisdiction of the several courts of record"—thereby indicating that the jurisdiction conferred upon the several courts of record should be exclusive as against justices of the peace—no analogous provision was made as between the courts of record; and that, consequently, the Constitution did not forbid the Legislature from investing courts of record of the same order and grade with equal authority over any given cause or subject matter of litigation. The court, also, said that "The cases are numerous which stand opposed to or are inconsistent with the idea of the complete distribution by the Constitution of judicial power among the several courts, and of their exclusive jurisdiction of all the subject matters committed to them." "There are many matters," [83] it observed, by way of illustration, "that we need not pause to specify, that would usually and properly pertain to the court exercising probate powers as involved in the settlement of the estates of deceased persons, that may form the subject matters of suits in equity and be properly litigated in the District Court." It referred to *Perry* v. *Ames* as sustaining the theory of concurrent jurisdiction, and pronounced that doctrine to be correct. It further said that the *dictum* in *Caulfield* v. *Stevens* must yield to the decision in *Perry* v. *Ames*.

The doctrine of this case, upon the question of the concurrent jurisdiction of district and probate courts of actions in equity to abate nuisances, was reaffirmed in *Yolo County* v. *Sacramento*, 36 Cal. 195.

The latest decision in the state court, to which our attention is called, which bears directly on the question of jurisdiction, is *Rosenberg* v. *Frank*, 58 Cal. 387, 402. In that case will be found some material qualification of the general language used in previous cases. That was a suit in equity brought by executors in a district court for the purpose of obtaining a construction of a will. It was suggested that the Probate Court had jurisdiction of the subject matter of the cause, and that its jurisdiction was, for that reason, exclusive. The court, adhering to the rule announced in the *Courtwright Case*, held the authority of the District Court to be ample and plenary, under the grant to it of original jurisdiction in cases of equity. After stating that the jurisdiction of Probate Courts is not defined in the Constitution, and referring to the provision that county judges shall "perform such duties as probate judges as may be prescribed by law," the court said: "It seems from the above that the Legislature may make the jurisdiction of the probate judge or court what it pleases within the limits of that jurisdiction which is understood as usually pertaining to Probate Courts." As late as *Burroughs* v. *De Couts*, 70 Cal. 371, the court said: "Both Burroughs and Seamans are estopped by the decree of partition in the probate court from setting up title given Soto adverse to that of their cotenants under the same title"—citing [84] Code of Civil Procedure, § 1908; Freem. Coten. & Part. § 530-32; and Freem. Judg. § 249.

Whether it is to be fairly deduced from the broad language in previous decisions, that the Legislature may confer upon Probate Courts concurrent jurisdiction as to every matter embraced within the grant of original jurisdiction to the District Courts, is a question which need not now be decided. It is only necessary to accept the decision of *Rosenberg* v. *Frank*, as furnishing the constitutional test for determining the extent of the jurisdiction with which the Probate Courts of California may be endowed. The question, therefore, is whether after the final settlement of the accounts of a personal representative, and after a decree of distribution, defining the undivided interests of heirs in real estate in the hands of such representative—neither the title of the decedent nor the fact of heirship being disputed—the partition of such estate among the heirs, so as to invest them separately, with the exclusive possession and ownership, as against coheirs, of distinct parcels of such realty, is a subject matter which may be committed to Probate Courts according to the jurisdiction usually pertaining to those tribunals.

We lay aside, as not open to dispute, the proposition that there is a difference between distribution and partition. And we are satisfied that that difference was in the mind of the Legislature when it passed the original Probate Act, as well as when the Code of Civil Procedure was adopted. As correctly observed by counsel, distribution neither gives a new title to property, nor transfers a distinct right in the estate of the deceased owner, but is simply declaratory as to the persons upon whom the law casts the succession, and the extent of their respective interests; while partition, in most, if not in all, of its aspects, is an adversary proceeding, in which a remedial right to the transfer of property is asserted, and resulting in a decree which, either *ex proprio vigore* or as executed, accomplishes such transfer. But this difference is not sufficient, in itself, to solve the inquiry as to whether partition is so far alien to the probate system, as recognized by the Constitution of California, that the power to make it could not be conferred upon Probate [85] Courts; for, according to the doctrine of *Rosenberg* v. *Frank*, those tribunals may exercise whatever powers the Legislature may, in its discretion, confer upon them, within the limits of such jurisdiction as usually pertains to Probate Courts. If, at the time the Constitution of California was adopted, the partition, by Probate Courts, among the heirs of a decedent, of undivided real estate, was unknown in the jurisprudence of this country, there would be ground, under the doctrine of *Rosenberg* v. *Frank*, to contend that no such jurisdiction could be conferred upon Probate Courts in that State. But such is not the case. In a large number of the States, as the citations by counsel of statutes and decisions show, Probate Courts were, and are, invested with power to make partition, among heirs or devisees, of estates coming within their cognizance for settlement and distribution. 1 Washb. Real Prop. 718, Bk. I, c. XII, § 8; Freem. Coten. & Part. § 550. The significance of this fact is not materially weakened by the circumstance that, generally, where the power of partition is or has been exercised in this country by Probate Courts, it has been by express authority of statutes which were not forbidden by constitutional

provisions. The existence of such statutes, in many of the States, precludes the idea, so strongly pressed by plaintiffs' counsel, that, when the Constitution of California was adopted, partition was foreign to the probate system, as administered in this country. Such legislation, we suppose, has its origin in the belief that it is convenient, if not desirable, for all concerned in the estate of a decedent, that the same court, which supervises the final settlement of the accounts of a personal representative, and ascertains and declares the interests of heirs in such estate as may remain after the demands of creditors are satisfied, should have the power to make partition. We are not prepared to say that this belief is not well grounded. The connection between the administration, settlement, distribution, and partition of an estate is such that the power to make partition may be justly regarded as ancillary to the power to distribute such estate, and, therefore, not alien to the probate system as it has [86] long existed and now exists in many States. For the reasons stated, and in view of the recent decisions of the highest court of California, we do not feel at liberty to hold that the Legislature could not constitutionally invest Probate Courts with jurisdiction to make partition of an undivided estate among the heirs at law of the deceased.

It is proper, in this connection, to say that there is nothing in *Ferris* v. *Higley*, 87 U. S. 20 Wall. 382 [22:384], upon which the plaintiffs rely, to show that partition is foreign to the probate system as administered in this country. The decision there was, that, in view of the organic Act of Utah, which did not define the jurisdiction of the Probate Courts, and in view of the distribution by that Act of judicial power among the various courts of that Territory, the jurisdiction of Probate Courts must be determined with reference to the general nature and character of the latter tribunals as recognized in our system of jurisprudence. An Act of the territorial Legislature, giving Probate Courts "original jurisdiction, both civil and criminal, and as well in chancery as at common law, when not prohibited by legislative enactment," was, therefore, held to be unconstitutional. So far from the doctrines of that case militating against the decision of the Supreme Court of California in *Rosenberg* v. *Frank*, it was said in *Ferris* v. *Higley* to be the almost uniform rule among the people who make the common law of England the basis of their jurisprudence, to have a distinct tribunal for the establishment of wills and the administration of the estates of men dying either with or without wills—which tribunals are variously called Prerogative Courts, Probate Courts, Surrogate Courts, Orphans' Courts, etc.; and that to these functions "have occasionally been added the guardianship of infants, and the control of their property, the allotment of dower, and perhaps other powers related more or less to the general subject."

It remains to consider whether the decree of partition is void upon grounds other than those relating to the constitutionality of the statute under which the Probate Court proceeded. The Circuit Court of the United States had no jurisdiction to set aside that decree, merely [87] upon the ground of error; nor could it refuse to give it full effect, unless the Probate Court was without jurisdiction of the case. *Cooper* v. *Reynolds*, 77 U. S. 10 Wall. 315 [19:931]; *Gunn* v. *Plant*, 94 U. S. 669 [24:306]; *Hall* v. *Law*, 102 U. S. 461, 464 [26:217]; *Marchand* v. *Frellsen*, 105 U. S. 428 [26:1059]. And in determining the question of jurisdiction, it must be remembered that Probate Courts of California have had for many years the rank of courts of general jurisdiction; and as said in *Burroughs* v. *De Couts*, 70 Cal. 372, their proceedings, "within the jurisdiction conferred upon them by the law, are to be construed in the same manner and with the like intendments as the proceedings of courts of general jurisdiction, and their judgments have like force and effect as judgments of the District Courts." Probate Courts being, then, courts of superior jurisdiction, in respect to the settlement, distribution and partition of estates coming within their cognizance, the recitals in the decree of partition, unless contradicted by the record will be presumed to be correct, and every intendment will be indulged in its support. *Settlemier* v. *Sullivan*, 97 U. S. 449 [24:1112]; *Cheely* v. *Clayton*, 110 U. S. 708 [28:301]. With these preliminary observations as to the effect to be given to the decree and its recitals, where the decree is attacked in a collateral suit, we proceed to examine such of the objections to its validity as we deem of sufficient importance to notice.

1. It is contended that the administratrix, as such, had no interest in the partition of the decedent's estate, and could not, in that capacity, initiate proceedings therefor. Too much stress is laid upon the circumstance that the petition in the Probate Court was signed by Mrs. Hawes, as "administratrix." The petition seeks something more than a final settlement of her accounts, and a declaration of the interests of the heirs in the undistributed estate. It embraces also her claim as widow and heir, to a share in the estate remaining after the payment of debts and charges, and contains a distinct prayer that partition be had between herself and the children. It shows, as do the orders preceding the decree of partition, that she sought a settlement of her accounts as administratrix, and a final adjudication of her rights as heir at law in the estate remaining in her [88] hands. If it would have been better practice to have made partition the subject of a suit entirely separate from the proceeding for settlement and distribution, the blending of final settlement, distribution, and partition in the same petition, or in one suit, did not defeat the jurisdiction of the court or render its decree of partition void. The record shows that the question of partition was not considered or determined in the Probate Court until after it had made its decree of final settlement and distribution.

2. It is contended that proper notice was not given to the minor children of the proceedings in the Probate Court. This point is not sustained by the record of those proceedings. The decree of distribution recites that it appeared to the satisfaction of the court that due and sufficient notice of the time and place of hearing the petition had been duly given, as required by law, prior to the day set for hearing, and that the attorney appointed by the court to represent the minor children appeared

at the hearing. It is also shown that this attorney was present at every step of the proceedings for partition. The decree for partition recites that it appeared to the satisfaction of the court that the commissioner appointed to make partition "gave notice to all parties interested, in all respects as prescribed by the statute in such cases." These recitals are not contradicted by anything in the record, unless it be that representation of the minor children in the proceedings for settlement, distribution, and partition, by an attorney appointed by the court, rather than by a guardian *ad litem*, was wholly inadequate to bring them into court. It is to be remembered that the Civil Code expressly provides that notice of proceedings for partition may be "either personally or by public notice as the Probate Court may direct," § 1676; and if the account presented by the personal representative be one for final settlement, and the estate be ready for distribution, "on confirmation of the final account, distribution and partition of the estate to all entitled thereto may be immediately had, without further notice or proceedings." § 1634. It should also be observed that if the recitals, in the decrees of distribution and partition, of [89] due notice, be open to dispute in this collateral proceeding, it does not appear that the publication was not made, in all respects, as required by the order of court, and by the Code.

In this connection it is insisted that the particular mode adopted in publishing notice of the proceedings for settlement, distribution, and partition, was not sufficient, in law, to give the court jurisdiction as to the children. This position is not tenable. The order to show cause why there should not be a final settlement and distribution, followed by a partition, according to the rights of the parties, was very full and explicit; and it was served in one of the modes by which, under the local law, jurisdiction could be acquired. The mode adopted was by publication for "four successive weeks in such newspaper in the county as the court or judge shall direct." § 1589. *Pearson* v. *Pearson*, 46 Cal. 635. The failure to repeat, in the order, the names of the minor children—whatever force that objection might have had upon a direct appeal from the decree of partition—is not a matter affecting the jurisdiction of the court over the subject matter and the parties; for, the petition, and the order appointing an attorney to represent the minors, contained the names in full of all interested in the proceedings for settlement, distribution, and partition.

3. It is, however, insisted that the defense for the minor children—who are not shown to have had, at the time, any general or special guardian in the county or State—could only have been conducted by a guardian, and that the appearance in their behalf by an attorney, appointed by the court to represent them, did not bring them into court. This position is based upon §§ 372 and 373 of the Civil Code of Procedure. But those sections, in our opinion, have reference to civil actions as distinguished from "special proceedings." Civil Code, §§ 20 to 23; 372–3. A suit for partition, in a Probate Court, is a special proceeding, *Waterman* v. *Lawrence*, 19 Cal. 218; and the section which controls the determination of this question is § 1718, part of title XI, relating to "Proceedings in Probate Courts." That section, among other things, provides that, "At or before the hearing of petitions and con- [90] tests for the probate of wills; for letters testamentary or of administration; for sales of real estate and confirmations thereof; settlements, partitions and distributions of estates; setting apart homesteads; and all other proceedings where all the parties interested in the estate are required to be notified thereof, the court must appoint some competent attorney at law to represent, in all such proceedings, the devisees, legatees, heirs, or creditors of the decedent, who are minors and have no general guardian in the county, or who are nonresidents of the State; and may, if he deem it necessary, appoint an attorney to represent those interested who, though they are neither such minors nor nonresidents, are unrepresented. The order must specify the names of the parties for whom the attorney is appointed, who is thereby authorized to represent such parties in all such proceedings had subsequent to his appointment. The appearance of the attorney is sufficient proof of the service of the notice on the parties he is appointed to represent." We have not been able to find any provision requiring the appointment of guardians *ad litem* in probate proceedings. Without considering whether the failure to appoint a guardian *ad litem* for minors, where the statute requires it to be done, would vitiate the decree, and make it open to attack collaterally, it is sufficient to say that the appointment of an attorney to represent the children in the Probate Court was authorized by the statute.

These views are in conformity with the recent decision in *Carpenter* v. *Superior Court of San Joaquin County*, decided April 21, 1888, and not yet reported. One of the questions there was as to the validity of certain proceedings for the probate of a will, in which minor heirs were represented by an attorney, appointed by the court, and not by a guardian *ad litem*. Reliance was placed upon the section of the Civil Code § 372, part of the title "Parties to Civil Actions," which provides that "when an infant is a party he must appear by his general guardian, if he has one; and if not, by a guardian who may be appointed by the court, in which the action is prosecuted, or by a judge thereof, or a county judge." It was held that probate proceedings were not Civil Actions within the meaning of that title. The court [91] said: "The thing which a guardian *ad litem* is appointed to do is to 'represent' the infant in the action or proceeding (C. C. § 372), by which we understand that he is to conduct and control the proceedings on behalf of the infant. Now the attorney for minors in probate proceedings is to 'represent' the minor (C. C. P. § 1718), and so far as he is concerned to conduct and control the proceedings; so that if the general provisions apply it would be possible to have two representatives of the minor in the same contest, neither of whom would be subordinate to the other. We do not think that such a result could have been intended."

There are no other questions in the case which we deem it necessary to discuss.

We find no error in the judgment below, and it is affirmed.

[244] DAVID BANKS ET AL., Partners, Under the Name of BANKS & BROS., *Appts.*,
v.
G. L. MANCHESTER.

(See S. C. Reporter's ed. 244-254.)

Equity rule—copyright in opinions of the court, etc.—right of reporter and of the State in the copyright—the judge is not an author—State, as assignee—interest of judges in their judicial labors—reporter's interest.

1. Where the plaintiff, under Rule 60 in equity, instead of filing a replication to an answer sets the cause down for hearing upon bill and answer, the allegations of new matter in the answer are to be taken as true.

2. Where the opinion or decision of the court and also the statement of the case and the *syllabus* or head note are exclusively the work of the judges of the court, the reporter of such court is not the author of any part of such matter.

3. No authority exists for obtaining copyright beyond the extent to which Congress has authorized it. A copyright cannot be sustained as a right existing at common law.

4. Where the reporter is not the author of the *syllabus*, the statement of the case or the opinion of the court, he cannot obtain a copyright therefor for the benefit of the State. In such case the State cannot become the assignee of the reporter as such author. The State cannot properly be called a citizen of the United States or a resident therein within sections 4952 and 4954, R. S. U. S.

5. Where a copyright is taken out for the State by the reporter of a court, for matter of which he is not the author, it is to be regarded as if it had been taken out in the name of the State.

6. The judge who, in his judicial capacity, prepares the opinion or decision, the statement of the case or the *syllabus* or head note, cannot be regarded as their author or their proprietor in the sense of section 4952, R. S. U. S., so as to be able to confer any title by assignment on the State sufficient to authorize it to take a copyright for such matter under that section as the assignee of the author or proprietor.

7. Whether the State could take out a copyright for itself, or could enjoy the benefit of one taken out by an individual for it as the assignee of a citizen of the United States, or a resident therein who should be the author of a book, is a question not involved in the present case and is not considered by the court.

8. Judges can themselves have no pecuniary interest or proprietorship, as against the public at large, in the fruits of their judicial labors; and no copyright can, under the statutes passed by Congress, be secured in the products of the labor done by judicial officers in the discharge of their judicial duties.

9. The reporter has no copyright in the written opinions delivered by the court; and the judges thereof cannot confer any such right on any reporter, nor on any other person nor on the State.

[No. 45].

Submitted Oct. 29, 1888. Decided Nov. 19, 1888.

APPEAL from a decree of the Circuit Court of the United States for the Southern District of Ohio, dismissing upon bill and answer an action for an injunction to perpetually restrain defendant from printing and publishing the decisions which will appear in volumes 41 and 42 Ohio State Reports, and for an injunction to that effect *pendente lite*. *Affirmed.*

The facts are stated in the opinion.

Reported below, 23 Fed. Rep. 143.

Mr. **Edward L. Taylor,** for appellants:

A contract made in pursuance of a statute or resolution must be construed as though such statute or resolution had been incorporated into such contract.

Banks v. *De Witt*, 42 Ohio St. 263, 274.

If the right exists on the part of the State to have a copyright, either in the volumes of the reports or the opinions of the judges, it is immaterial by what agency the right is exercised.

Little v. *Gould*, 2 Blatchf. 366.

Property in judicial decisions is a proper subject of copyright; the people who employ and pay judges are the rightful owners of the literary property in the opinions written by them.

Drone, Copyright, 161; 5 Bacon, Abr. 595; Carter, Rep. 91; *Basket* v. *Cambridge University*, 1 W. Bl. 106; *Millar* v. *Taylor*, 4 Burr. 2401-2403.

The State has the right to copyright the literary work of its officers.

Little v. *Gould*, 2 Blatchf. 365, 366.

If an adequate compensation was paid by the State to the reporter for the work done by him in preparing the volumes of reports, then whatever property there was in the volumes arising from the labors of the reporter ought to belong to the State and not to him.

Myers v. *Callaghan*, 5 Fed. Rep. 728.

The judges and the reporter being paid by the State, the product of their mental labor is the property of the State, and the State has power to take for itself a copyright of it.

Gould v. *Banks*, 1 New Eng. Rep. 925, 53 Conn. 415.

In *Banks* v. *West Publishing Company*, 27 Fed. Rep. 50, the application for an injunction was denied, but it was placed entirely upon the ground that it was the clearly expressed intention of the Legislature of Iowa to make the opinions free to all. The weight of authority sustains the proprietary right of the State of Ohio in the opinions of its judges.

Wheaton v. *Peters*, 33 U. S. 8 Pet. 591 (8: 1055).

Mr. **Richard A. Harrison,** for appellee:

A State cannot copyright a report of the opinions of its courts. The courts are but a branch of the State Government, and act as such. The judges are public officers and their opinions are not their acts as individuals, but as such officers; they have, therefore, no proprietorship in their opinions.

Wheaton v. *Peters*, 33 U. S. 8 Pet. 653, 658 (8: 1078, 1079); U. S. R. S. § 4952.

The word "person," as defined by the Revised Statutes, does not apply to a State.

U. S. R. S. §§ 1-5; also § 3140 as to Revenue Laws.

The primary and usual definition of "citizen of the United States" would not include a State. Such an independent sovereignty is not a "citizen."

2 Story, Const. §§ 1683, 1932; Morse, Citizenship, § 209.

"Citizen" is analogous to "subject," at common law.

Morse, Citizenship, 303 and cases cited; *U. S.* v. *Rhodes*, 1 Abb. (U. S.) 39.

The term "citizens of a State" applies only to natural persons, members of the body politic.

Paul v. *Va.* 75 U. S. 8 Wall. 168 (19: 357); *People* v. *Imlay*, 20 Barb. 68, 80; *U. S.* v. *Cruikshank*, 92 U. S. 542, 549, 550 (23: 588, 590, 591).

The State has no common-law property right in the opinions of its courts; the exclusive right conferred by a copyright exists only by virtue of a statute conferring it.

Wheaton v. *Peters*, 33 U. S. 8 Pet. 591, 658-656 (8: 1055, 1078, 1079); *Gendell* v. *Orr*, 13 Phila. 191.

Each citizen has the right of access to the laws and to any official interpretation thereof.

Per Brewer, *J.*, in *Banks* v. *West. Pub. Co.* 27 Fed. Rep. 50, 57.

The law cannot and ought not to be made the prisoner or the slave of any individual.

Wheaton v. *Peters*, *supra*.

The construction given to a statute of a State by the highest judicial tribunal of such State is binding upon the courts of the United States.

Leffingwell v. *Warren*, 67 U. S. 2 Black, 603 (17: 262).

The State pays the judges, and therefore owns the product of their official toil.

Brewer, *J.*, in *Banks* v. *West Publishing Co.* 27 Fed. Rep. 50, 57.

The right to literary property exists not at common law, but only by virtue of the statute.

Myers v. *Callaghan*, 5 Fed. Rep. 726.

The constitutional provision and the Act of Congress passed in pursuance thereof refer only to individuals and natural persons.

Atwill v. *Ferrett*, 2 Blatchf. 39.

The laws and judicial decisions of a State are public property. The legislators or judges who write them have no property in them, and therefore are not within the meaning of the copyright law.

Drone, Copyright, 161.

The public has the right of free access to the opinions of the justices of the court after they are delivered to the reporter.

Nash v. *Lathrop*, 1 New Eng. Rep. 918, 142 Mass. 29.

The opinions of the justices, after they are delivered, belong to the public.

Conn. v. *Gould*, 34 Fed. Rep. 319.

The proceedings of courts of justice should be universally known.

King v. *Wright*, 8 T. R. 293, 298; *Lewis* v. *Levy*, Ell. B. & Ell. 537, 559; *Rex* v. *Fisher*, 2 Camp. 563, 571.

Copyright taken out upon a volume of reports published under the Ohio Statute protects only the work of the reporter; that is to say, indexes, table of cases, and the statement of points made and authorities cited by counsel.

Davidson v. *Wheelock*, 27 Fed. Rep. 61; *Chase* v. *Sanborn*, 4 Cliff. 306; *Myers* v. *Callaghan*, 20 Fed. Rep. 441.

The courts have almost uniformly interpreted the statutes closely resembling the present so as to restrict the copyright to the completed volume.

Davidson v. *Wheelock*, 27 Fed. Rep. 61; *Banks* v. *Manchester*, 23 Fed. Rep. 143.

[245] *Mr. Justice* **Blatchford** delivered the opinion of the court:

The Revised Statutes of Ohio, in sections 426 to 435 (title 4, chap. 1, pp. 273, 274, edition of 1879), provide for the appointment of a reporter by the supreme court of that State, to report and prepare for publication its decisions, and for the printing of copies of the reports by the public printer, and for their distribution to public officers, as soon as a form of sixteen pages of printed matter is printed, and also for the binding and distribution of a full volume.

Section 436 provides as follows: "The reporter shall secure a copyright, for the use of the State, for each volume of the reports so published; and he shall receive such compensation for his services, not exceeding eighteen hundred dollars per year, during the time the Supreme Court Commission is in session; and at all other times not exceeding one thousand dollars yearly, payable out of the state treasury, in such installments as the supreme court, by order, entered on its journal, directs."

Section 437, as amended by the Act of January 17, 1881 (Vol. 78, Laws of Ohio, p. 14), provides for the mode of doing such printing and binding, under a contract to be made by the Secretary of State with a responsible person or firm, when and as often as he shall be authorized to do so by a resolution of the General [246] Assembly. That section says: "Such contract shall not be for a longer period than two years; and such contractor shall have the sole and exclusive right to publish such reports, so far as the State can confer the same, during such period of two years, and shall be furnished with the manuscript to be printed, as provided in this chapter." It also provides not only for the printing and binding, and the furnishing to the State and the selling to the public, of copies of the volumes of the reports, but for the furnishing to the Secretary of State of a prescribed number of advance sheets of the reports, in forms of sixteen pages of printed matter.

On the 17th of April, 1882, the General Assembly of the State of Ohio passed the following Joint Resolution (Vol. 79, Laws of Ohio, p. 249):

"Joint Resolution providing for the publication of the Ohio State Reports and the advance sheets of the same.

"Be it resolved by the General Assembly of the State of Ohio, That the Secretary of State be and he is hereby authorized to contract with some responsible person or firm to furnish material, print, bind and supply the State with three hundred and fifty copies of the thirty-eighth and any other subsequent volume or volumes of the Ohio State Reports that may be ready for publication within two years from the 23d day of June, 1882, said contract to be made with the lowest responsible bidder, as provided in section 2, article 15 of the Constitution, after first giving public notice to bidders for four weeks in some weekly newspaper published in Columbus, Ohio, and of general circulation in the State. Said contract to be made in accordance with the provisions and subject to the limitations and instructions of section 437 of the Revised Statutes, as to cost and otherwise, and shall include the advance sheets provided for in said section. The volume to be in quality of paper and binding, equal to volume 1 Ohio State Reports, as provided by law."

On the 16th of June, 1882, in pursuance of that resolution, the Secretary of State of the State of Ohio entered into a contract on behalf of that State, and in which it was named as the party of the second part, with H. W. Derby & Co., of Columbus Ohio, the material parts [247] of which were as follows: H. W. Derby & Co. agreed to furnish the material for, and to print and bind, on paper and in character and quality of binding equal to volume one, Ohio State Re-

ports, in the manner in all respects and with the expedition as provided by law, a sufficient number of copies of volume 38, and of the next succeeding volume or volumes, if any, of the Ohio State Reports, that might be ready for publication within two years from and after June 23, 1882; to supply the State with a specified number of copies of each volume, when bound, at a specified price per volume; to supply the public with like copies at a specified, limited price; and to set up the matter furnished them in forms of sixteen pages, and furnish to the Secretary of State printed copies of such forms. The State agreed that Derby & Co. "shall have the sole and exclusive right to publish the reports aforesaid, so far as the said State of Ohio can confer the same, for and during the said period of two years, commencing with said 23d day of June, 1882, and that they shall, moreover, be furnished with all the manuscript thereof to be printed, as provided by law." Derby & Co. assigned all their right and interest in the contract to Banks & Brothers, of New York City.

The bill of complaint in the present case was filed by David Banks and A. Bleecker Banks, composing the firm of Banks & Brothers, against G. L. Manchester, in the Circuit Court of the United States for the Southern District of Ohio. It sets forth the matters above stated, and avers that Banks & Brothers have proceeded to carry out all the terms and conditions of the contract, and that they and the State of Ohio are complying with its conditions; that the Supreme Court of Ohio has decreed that volumes 41 and 42 of the Ohio State Reports shall be published under and are included in the terms of the contract, and that no other persons have any right to publish the decisions which are to be contained in said volumes 41 and 42, except as authorized by Banks and Brothers; that the contract was made in pursuance of sections 436 and 437 of the Revised Statutes of Ohio; that the plaintiffs, on October 1, 1884, entered into an arrangement with "The Capital Printing [248] and Publishing Company," of Columbus, Ohio, by which that company was authorized to publish the decisions of the Supreme Court of Ohio, and of the Supreme Court Commission of Ohio, which were to be contained in, and to constitute what would be, the 41st and 42d Ohio State Reports, the same to be published in "The Ohio Law Journal," a publication owned by said company; that, under such arrangement, that company, on the 14th of October, 1884, issued its No. 9 of volume 6 of "The Ohio Law Journal," and at the same time issued, as a supplement to that number, a certain book or publication containing, among other cases, one entitled "The Sciota Valley Railway Company *v.* McCoy," decided by the Supreme Court of Ohio, and which would appear as a part of volume 42 of Ohio State Reports; and one entitled "Bierce et al. *v.* Bierce et al.," decided by the Supreme Court Commission of Ohio, and which would appear as a part of volume 41 of Ohio State Reports; and that, before said book was issued, and on the 13th of October, 1884, E. L. DeWitt, "reporter for the Supreme Court of Ohio and of the Supreme Court Commission of Ohio, in pursuance of the duties of his office and for the benefit of the State of Ohio," entered in the office of the Librarian of Congress, at Washington, a printed copy of the title of said work, containing the said decisions, and did, within ten days thereafter, deposit in the said office, at Washington, two complete copies of said book.

A copy of the said number of "The Ohio Law Journal," with the book as a supplement, containing 16 printed pages, is attached to the bill. It shows the title of the book, or supplement, as entered in the office of the Librarian of Congress, and as afterwards issued, namely, "Cases argued and determined in the Supreme Court and Supreme Court Commission of Ohio;" and, below the title and table of contents, and on the first page of the book, which is page 17, is printed the following: "Entered according to the Act of Congress in the year eighteen hundred and eighty-four, by E. L. DeWitt, for the State of Ohio, in the office of the Librarian of Congress, at Washington. [All rights reserved.]"

The bill avers that that title was printed on each copy of the book issued by the Capital [249] Printing and Publishing Company, as was also the above notice of copyright; that the defendant, on November 5, 1884, issued numbers 22 and 23 of volume 1 of a book entitled "The American Law Journal," in one of which numbers he printed and published the said case of "Bierce et al. *v.* Bierce et al.," and in the other of which he printed and published the said case of "The Sciota Valley Railway Company *v.* McCoy," that, prior to the said publication by the defendant, neither of said cases had been published except in the book so issued, on the 14th of October, by the Capital Printing and Publishing Company; and that those cases were copied by the defendant from the book so copyrighted by De Witt for the State of Ohio. Copies of such publications of the defendant are annexed to the bill. It further avers that the defendant has declared to the plaintiffs in writing his intention to disregard their rights, and to continue the publication in "The American Law Journal" of the decisions of the Supreme Court and Supreme Court Commission of Ohio.

The prayer of the bill is for an injunction perpetually restraining the defendant from printing and publishing the decisions which will appear in volumes 41 and 42, Ohio State Reports, and for an injunction to that effect *pendente lite.*

The defendant answered the bill. The answer denies that the Supreme Court of Ohio has decreed that volumes 41 and 42 of the Ohio State Reports shall be published under and are included in the terms of the contract with Derby & Co., and that no other persons have the right to publish the decisions which are to be contained in said volumes 41 and 42, except as authorized by the plaintiffs. It also denies that the attempt on the part of Mr. DeWitt, the reporter, to obtain a copyright on the book and printed matter described in the bill, and published by the Capital Printing and Publishing Company, was in pursuance of his duties as reporter; and denies that the attempted copyright by the reporter was for the benefit of the State of Ohio; and denies that the contract referred to was made in pursuance of section 436 of the Revised Statutes, but avers that it was made under section 437 and the Joint Resolution

250] referred to. It also avers that the opinions and decisions of the Supreme Court and Supreme Court Commission of Ohio, referred to in the bill as having been published by the defendant in "The American Law Journal," were exclusively the work of the judges composing those courts; that the reporter performed no work in preparing the said opinions and decisions; that it is the universal custom and practice of those courts that the judge to whom the duty is assigned of preparing the opinion, prepares not only the opinion but also the statement of the case and the *syllabus*, the latter being subject to revision by the judges concurring in the opinion; that the reporter takes no part, and performs no labor, in preparing the *syllabus*, the statement of the case, and the opinion; that the duty of the reporter consists in preparing abstracts of arguments of counsel, tables of cases, indexes, reading proof, and arranging the cases in their proper order in the volumes of reports; and that the reporter is paid a stated annual salary out of the treasury of the State, fixed by law, and has no pecuniary interest in the publication of the reports.

The plaintiffs filed a formal demurrer to the answer; but, no such pleading being authorized by the rules in equity, the case was heard upon bill and answer, and a decree was entered dismissing the bill, from which decree the plaintiffs have appealed.

The decision of the circuit court is reported in 23 Fed. Rep. 143. That court held (1) that no duty was imposed upon the reporter by the statutes of Ohio before mentioned, to secure a copyright, for the use of the State, for any volume of reports published by virtue of a contract made by the Secretary of State under section 437; (2) that there was nothing in the statute which authorized the reporter, or any other person, to acquire a copyright in the opinions or decisions of the judges; (3) that the copyright of a volume would not interfere with the free publication of everything which was the work of the judges, including the *syllabus*, and the statement of the case, as well as the opinion, but would protect only the work of the reporter, namely, the indexes, the tables of cases, and the statements of points made and authorities cited by counsel.

251] Rule 60 in equity authorizes the plaintiff, instead of filing a replication to an answer, to set the cause down for hearing upon bill and answer. In such case, allegations of new matter in the answer are to be taken as true. 2 Dan. Ch. Pr. 4th Am. ed. 982, note 1; *Brinckerhoff* v. *Brown*, 7 Johns. Ch. 217, 223; *Perkins* v. *Nichols*, 11 Allen, 542, 544; *Leeds* v. *Marine Ins. Co.* 15 U. S. 2 Wheat. 380, 384 [4:266, 268]. In the present case, it is to be taken as true, as alleged in the answer, that what the defendant published in "The American Law Journal" was exclusively the work of the judges, comprising not only the opinion or decision of the court or the commission, but also the statement of the case and the *syllabus* or head note. The copies of the publications made by the defendant, which are appended to the bill, show that the two cases referred to published by him, consist in each case of only the *syllabus* or head note, the statement of the case, the names of the counsel for the respective parties, and the opinion or decision of the court.

The copy of the supplement to No. 9 of volume 6 of "The Ohio Law Journal," appended to the bill, shows that what Mr. DeWitt undertook to obtain a copyright for, for the State of Ohio, in respect of the two cases referred to, was a report of each, consisting of the head note or *syllabus*, the statement of the case, the names of the counsel for the respective parties, and the decision or opinion of the court, all in identical language, in each case, with what was so afterwards printed and published by the defendant in "The American Law Journal," except that in the case of "The Scioto Valley Railway Company *v.* McCoy," the words "(To appear in 42 Ohio St.,)" and in the case of "Bierce et al. *v.* Bierce et al.," the words "(To appear in 41 Ohio St.)" printed in the publication in "The Ohio Law Journal," do not appear in the defendant's publication. It is therefore clear that in respect of the publication complained of, the reporter was not the author of any part of the matter for which he undertook to take a copyright, for the State of Ohio.

Although the Constitution of the United State, in section 8 of article 1, provides that the Congress shall have power "to promote the progress of science and useful arts, by securing for limited times to authors and inventors the exclusive right to their respective writings and discoveries," yet the means for securing such right to authors are to be prescribed by Congress. It has prescribed such a method, and that method is to be followed. No authority exists for obtaining a copyright, beyond the extent to which Congress has authorized it. A copyright cannot be sustained as a right existing at common law; but, as it exists in the United States, it depends wholly on the legislation of Congress. *Wheaton* v. *Peters*, 33 U. S. 8 Pet. 591, 662, 663 [8:1055, 1081]. [252]

Section 4952 of the Revised Statutes of the United States provides, that "Any citizen of the United States or resident therein, who shall be the author, inventor, designer, or proprietor of any book . . . and the executors, administrators or assigns of any such person, shall, upon complying with the provisions of this chapter" (chapter 3 of title 60), "have the sole liberty of printing, reprinting, publishing, completing, copying, executing, finishing, and vending the same." This right is granted for the term of twenty-eight years from the time of recording the title of the book in the manner directed in the statute; and section 4954 provides, that "The author, inventor, or designer, if he be still living and a citizen of the United States or resident therein, or his widow or children, if he be dead, shall have the same exclusive right continued for the further term of fourteen years," upon recording the title of the work a second time, and complying with all other regulations in regard to original copyrights, within six months before the expiration of the first term.

We are of opinion that these provisions of the statute do not cover the case of the State of

Ohio in reference to what Mr. DeWitt undertook to obtain a copyright for, for the benefit of that State, in the present instance. Mr. DeWitt, although he may have been a citizen of the United States or a resident therein, was not the author, inventor, designer or proprietor of the *syllabus*, the statement of the case or the decision or opinion of the court. The State, therefore, could not become the assignee of Mr. DeWitt, as such author, inventor, designer, or proprietor. The State cannot properly be called a citizen of the United States or a resident therein, nor could it ever be in a condition to fall within the description in section 4952, or section 4954.

[253]

The copyright claimed to have been taken out by Mr. DeWitt in the present case, being a copyright "for the State," is to be regarded as if it had been a copyright taken out in the name of the State. Whether the State could take out a copyright for itself, or could enjoy the benefit of one taken out by an individual for it, as the assignee of a citizen of the United States or a resident therein, who should be the author of a book is a question not involved in the present case, and we refrain from considering it and from considering any other question than the one above indicated. In no proper sense can the judge who, in his judicial capacity, prepares the opinion or decision, the statement of the case, and the *syllabus* or head note, be regarded as their author or their proprietor, in the sense of section 4952, so as to be able to confer any title by assignment on the State, sufficient to authorize it to take a copyright for such matter, under that section, as the assignee of the author or proprietor.

Judges, as is well understood, receive from the public treasury a stated annual salary, fixed by law, and can themselves have no pecuniary interest or proprietorship, as against the public at large, in the fruits of their judicial labors. This extends to whatever work they perform in their capacity as judges, and as well to the statements of cases and head notes prepared by them as such, as to the opinions and decisions themselves. The question is one of public policy, and there has always been a judicial *consensus*, from the time of the decision in the case of *Wheaton* v. *Peters*, 33 U. S. 8 Pet. 591 [8:1055], that no copyright could, under the statutes passed by Congress, be secured in the products of the labor done by judicial officers in the discharge of their judicial duties. The whole work done by the judges constitutes the authentic exposition and interpretation of the law, which, binding every citizen, is free for publication to all, whether it is a declaration of unwritten law, or an interpretation of a Constitution or a statute. *Nash* v. *Lathrop*, 1 New Eng. Rep. 918, 142 Mass. 29, 35. In *Wheaton* v. *Peters*, at p. 668 [1083], it was said by this court that it was "unanimously of opinion that no reporter has or can have any copyright in the written opinions delivered by this court; and that the judges thereof cannot confer on any reporter any such right." What a court, or a judge thereof, cannot confer on a reporter as the basis of a copyright in him, they cannot confer on any other person or on the State.

[254]

The decree of the Circuit Court is affirmed.

PAUL B. MEANS, Assignee, etc., of MONTGOMERY & DOWD, *Appt.*, [273]
v.
CLEMENT DOWD ET AL.

(See S. C. Reporter's ed. 273-289.)

Fraudulent assignment—benefit of assignor—continuing the business—legal effect of assignment—facts showing fraud.

1. An assignment by a failing or insolvent debtor which secures to the assignor an interest in or an unlimited control over the property conveyed, and which has the effect of hindering or delaying creditors, is void as being a fraud upon those creditors.

2. An insolvent debtor making an assignment for the benefit of his creditors, cannot reserve to himself any beneficial interest in the property assigned, or interpose any delay, or make provisions which would hinder and delay creditors from their lawful modes of prosecuting their claims.

3. Such an instrument, which provides that the assignor shall remain in possession of the property and continue to sell the goods and collect the debts, the collections to be applied to replenish the stock, and which also contains a provision for the renewal of the debts and that, if any of the debts shall not be paid or if the assignees elect, they may take possession of the property and dispose of the same, is void as to creditors.

4. If the legal effect of the written instrument be to delay creditors, it is void.

5. The facts that the parties kept the instrument from record, and secret, until a creditor was about to procure a judgment, when it was recorded, and that the insolvent assignor was permitted for several months to continue in the possession and control of the goods, and to deal with them as his own, and that he made no change in the manner of conducting the business, and that no sign was put up indicating that any change of ownership had taken place, and that the same books were currently kept by the same bookkeeper, and entries were made in the same manner as before the assignment, and that the bankrupt was employed by the assignees to conduct the business, at a salary, taken in connection with the provisions of the instrument itself, show that it was made to hinder and delay creditors.

[No. 47.]

Argued Oct. 30, 1888. Decided Nov. 19, 1888.

APPEAL from a decree of the Circuit Court of the United States for the Western District of North Carolina, dismissing a bill brought, to set aside an assignment as fraudulent. *Reversed.*

The facts are stated in the opinion.

Mr. **Henry M. Herman**, for appellant:

A deed selling, conveying and transferring "the entire stock of goods, wares and merchandise, fixtures, personal property of a firm of merchants, and also such goods, wares and merchandise as the assignors or grantors may purchase to renew or replenish the said stock," with a proviso that the assignors are to remain in possession of said property and sell for cash only, which was given to secure the preferred debts (notes) therein specified, and any renewal thereof and any other note that may thereafter be given by the grantors and indorsed by the grantees, and providing that the surplus, if there be any, be returned to the grantors; and that in case any of the debts so specified or the renewals, or any of them are not paid when due—or if the grantees for any other cause elect, they are authorized to take possession and sell at public or private sale—is void on its face.

Lukins v. *Aird*, 73 U. S. 6 Wall. 79 (18:751)

Wooten v. *Clark*, 28 Miss. 75; *Arthur* v. *Com. & R. R. Bank*, 9 Smedes & M. 394; *Towle* v. *Hoit*, 14 N. H. 61; *Paul* v. *Crooker*, 8 N. H. 288; *Smith* v. *Lowell*, 6 N. H. 67; *Griswold* v. *Sheldon*, 4 N. Y. 581; *Second Nat. Bank of Leavenworth* v. *Hunt*, 78 U. S. 11 Wall. 392 (20:190); *Robinson* v. *Elliott*, 89 U. S. 22 Wall. 513 (22:758); *Davis* v. *Ransom*, 18 Ill. 396; *Spence* v. *Bagwell*, 6 Gratt. 444; *Nicholson* v. *Leavitt*, 6 N. Y. 510.

Any reservation of benefit to the grantor, such as stipulating for the possession of the assigned property, is fatal.

Holmes v. *Marshall*, 78 N. C. 262; *Cheatham* v. *Hawkins*, 76 N. C. 335; *Bigelow* v. *Stringer*, 40 Mo. 195; *Barney* v. *Griffin*, 2 N. Y. 371; *Leitch* v. *Hollister*, 4 N. Y. 211; *Mackie* v. *Cairns*, 5 Cow. 547; *Harris* v. *Sumner*, 2 Pick. 129; Burr. Assign. 4th ed. § 343, p. 514; *Billingsley* v. *Bunce*, 28 Mo. 547; *Reed* v. *Pelletier*, Id. 173; *Brooks* v. *Wimer*, 20 Mo. 503; *Stanley* v. *Bunce*, 27 Mo. 269; *Harman* v. *Hoskins*, 56 Miss. 142; *Joseph* v. *Levi*, 58 Miss. 843.

An assignment is void if it leaves the property to any extent under the control of the debtor or his assignee.

Owen v. *Arvis*, 26 N. J. L. 22; *Nat. Bank of Metropolis* v. *Sprague*, 21 N. J. Eq. 530; *Sheldon* v. *Dodge*, 5 Denio, 217.

A stipulation in a deed of trust conveying a stock of goods that the grantor may remain in possession and make sales, accounting to the trustee if required to do so, is fraudulent *per se*, and void.

Lang v. *Lee*, 3 Rand. (Va.) 410; *Addington* v. *Etheridge*, 12 Gratt. 436; *Perry* v. *Shenandoah Nat. Bank*, 27 Gratt. 755; *Sheppards* v. *Turpin*, 3 Gratt. 373; *Spence* v. *Bagwell*, 6 Gratt. 444; *Quarles* v. *Kerr*, 14 Gratt. 48; *Marks* v. *Hill*, 15 Gratt. 400; *Brokenbrough* v. *Brokenbrough*, 31 Gratt. 580-590; *Sturdivant* v. *Davis*, 9 Ired. Law, 368; *Moore* v. *Hinnant*, 89 N. C. 455.

An unusual and unreasonable postponement of the sale renders the assignment fraudulent and void under the statute.

Moore v. *Collins*, 3 Dev. L. 126; *Hafner* v. *Irwin*, 1 Ired. L. 490; *Cannon* v. *Peebles*, 2 Ired. L. 449; 4 Ired. L. 204; *Dewey* v. *Littlejohn*, 2 Ired. Eq. 495; *Hardy* v. *Skinner*, 9 Ired. L. 191.

The law requires that the parties shall not secure any advantage to the debtor in prejudice to his creditors.

Kissam v. *Edmonston*, 1 Ired. Eq. 180; *Garland* v. *Rives*, 4 Rand. (Va.) 282; *Marshall* v. *Hutchison*, 5 B. Mon. 298; *Pettibone* v. *Stevens*, 15 Conn. 19; *White* v. *Graves*, 7 J. J. Marsh. 523; *Sturtevant* v. *Ballard*, 9 Johns. 337; *Riggs* v. *Murray*, 2 Johns. Ch. 565; *Am. Exch. Bank* v. *Imloes*, 7 Md. 380; *Cunningham* v. *Freeborn*, 11 Wend. 241; *Nichols* v. *McEwen*, 17 N. Y. 22; *Blow* v. *Gage*, 44 Ill. 208.

A provision for future advances and future liabilities or a future loan renders the transfer fraudulent.

Sheldon v. *Dodge*, 4 Denio, 217; *Barnum* v. *Hempstead*, 7 Paige, 568; *Lansing* v. *Woodworth*, 1 Sandf. Ch. 43; *Currie* v. *Hart*, 2 Sandf. Ch. 353; *Peacock* v. *Tompkins*, Meigs, 317; Perry, Trusts, § 591; *Re Chamberlain*, 3 Nat. Bankr. Reg. 174; *Re Doyle*, Id. 159.

That the assignors were to receive salaries is evidence of fraud.

Nicholson v. *Leavitt*, 4 Sandf. 252; *Frank* v. *Robinson*, 96 N. C. 28; *Goldstein* v. *Nunan*, 66 Cal. 542; *Eigenburn* v. *Smith*, 98 N. C. 208.

The fact that the clause was inserted that the bankrupts were to sell for cash does not strengthen the instrument.

Edgell v. *Hart*, 13 Barb. 380; affirmed, 9 N. Y. 213; *Robinson* v. *Elliott*, 89 U. S. 22 Wall. 513 (22:758); *Second Nat. Bank of Leavenworth* v. *Hunt*, 78 U. S. 11 Wall. 392 (20:190); *Place* v. *Langworthy*, 13 Wis. 630; *Steinart* v. *Deuster*, 23 Wis. 136; *Horton* v. *Williams*, 21 Minn. 187; reaffirmed in New York in *Potts* v. *Hart*, 99 N. Y. 168; *Brackett* v. *Harvey*, 91 N. Y. 214.

The instrument being void as to after-acquired property it is void *in toto;* it cannot be valid in part and void in part.

Horton v. *Williams*, 21 Minn. 187; *Tiffany* v. *Boatman's Sav. Inst.* 85 U. S. 18 Wall. 388 (21:871); *Hyslop* v. *Clarke*, 14 Johns. 458; *Mackie* v. *Cairns*, 5 Cow. 547; *Norton* v. *Simmes*, Hob. 12; *Maleverer* v. *Redshaw*, 1 Mod. 35; *Russell* v. *Winne*, 37 N. Y. 591; *Tucker* v. *Welsh*, 17 Mass. 164; *Goodrich* v. *Downs*, 6 Hill, 438; *Harman* v. *Hoskins*, 56 Miss. 142; *Grover* v. *Wakeman*, 11 Wend. 194; *Skinner* v. *Packard*, 6 Wend. 415; *Rice* v. *Welling*, 5 Wend. 595; *Burke* v. *Murphy*, 27 Miss. 167; *Denny* v. *Dana*, 2 Cush. 160; *Young* v. *Pate*, 4 Yerg. 164; *Tickner* v. *Wiswall*, 9 Ala. 305.

The deed is void on its face.

Robinson v. *Elliott*, 89 U. S. 22 Wall. 513 (22:758); *Crooks* v. *Stuart*, 2 McCrary, 13; *Wells* v. *Langbein*, 20 Fed. Rep. 183; *Re Bloom*, 17 Nat. Bankr. Reg. 425; *Re Foster*, 18 Nat. Bankr. Reg. 64.

Reserving a power to give future preferences makes the assignment void.

Boardman v. *Halliday*, 10 Paige, 223; *Riggs* v. *Murray*, 2 Johns. Ch. 565; *VanNest* v. *Yoe*, 1 Sandf. Ch. 10; *Averill* v. *Loucks*, 6 Barb. 470.

The creditors have the right to determine whether the property shall be sold on credit; and a conveyance which takes away that right is a conveyance to hinder and delay creditors and cannot stand.

Barney v. *Griffin*, 2 N. Y. 371, 372; *Meacham* v. *Sternes*, 9 Paige, 405, 406; *Re Dean*, 86 N. Y. 398; *Duffy* v. *Duncan*, 32 Barb. 587, 35 N. Y. 187.

The instrument is void, because it was part of the agreement between the parties that the grantors were to remain in possession of the stock and sell the same on credit for the alleged account of the trustees.

City Bank of Rochester v. *Westbury*, 16 Hun, 458; *Nicholson* v. *Leavitt*, 6 N. Y. 510; *Brown* v. *Guthrie*, 39 Hun, 29.

It was void because the same sign remained over the store and there was no change in the manner of conducting their business.

Danby v. *Sharp*, 2 MacArt. 436; *Wright* v. *McCormick*, 67 Mo. 430; *Sands* v. *Codwise*, 4 Johns. 536; *Constantine* v. *Twelves*, 29 Ala. 607.

Where the assignee permits the assignor, nominally, as his agent, to continue the business and dispose of the goods at retail, it is a marked evidence of fraud.

Browning v. *Hart*, 6 Barb. 91; *Shepherd* v. *Hill*, 6 Lans. 387; *Pine* v. *Rikert*, 21 Barb. 469; *Waverly Nat. Bank* v. *Halsey*, 57 Barb. 249; *Butler* v. *Stoddard*, 7 Paige, 163; *Adams* v. *Davidson*, 10 N. Y. 309; *Carman* v. *Kelly*, 5

Hun, 283; *Re Petchell*, 10 Daly, 102; *Re Marklin*, Id. 122.

A clause or provision by which any advantage or benefit is reserved to the debtor at the expense of the creditors, whether such benefit be temporary or permanent, whether it be in the shape of payment of a gross or annual sum, employment at a compensation, or otherwise, and whether reserved to the debtor himself or for the support of the family, is a fraud in law and vitiates the whole instrument.

M'Clurg v. *Lecky*, 3 Pen. & W. 88, 91, 93; *Richards* v. *Hazzard*, 1 Stew. & P. 139; *Ingraham* v. *Grigg*, 13 Smedes & M. 22; *Claflin* v. *Iseman*, 23 S. C. 416; *Mackie* v. *Cairns*, 5 Cow. 547; *Harris* v. *Sumner*, 2 Pick. 129; *Goodrich* v. *Downs*, 6 Hill, 438; *Currie* v. *Hart*, 2 Sandf. Ch. 353; *Brooks* v. *Wimer*, 20 Mo. 503; *Hatcher* v. *Winters*, 71 Mo. 30; *Knight* v. *Packer*, 12 N. J. Eq. 214; *Klapp* v. *Shirk*, 13 Pa. 589; *Spence* v. *Bagwell*, 6 Gratt. 444; *Henderson* v. *Downing*, 24 Miss. 107.

Leaving the bankrupts in possession is strong evidence of fraud.

Pine v. *Rikert*, 21 Barb. 469; *Wright* v. *Linn*, 16 Tex. 84; *Caldwell* v. *Williams*, 1 Ind. 405; *Potts* v. *Hart*, 99 N. Y. 168; *Wray* v. *Davenport*, 79 Va. 19; *Nat. Bank* v. *Lovenberg*, 68 Tex. 506; *Sanborn* v. *Putnam*, 61 N. H. 506; *Bindley* v. *Martin*, 28 W. Va. 773; *Benedict* v. *Renfro*, 75 Ala. 121; *Claflin* v. *Rosenberg*, 42 Mo. 439; *Robinson* v. *Elliott*, 89 U. S. 22 Wall. 513 (22: 758); *Blennerhassett* v. *Sherman*, 105 U. S. 100 (26: 1080); *Hungerford* v. *Earle*, 2 Vern. 261; *Tarback* v. *Marbury*, Id. 510; *Twyne's Case*, 3 Rep. 80 a; *Wilson* v. *Day*, 2 Burr. 827; *Law* v. *Skinner*, 2 W. Bl. 996; *Jessup* v. *Hulse*, 29 Barb. 539; *Doughten* v. *Gray*, 2 Stock. 323; *Rogers* v. *Vail*, 16 Vt. 329; *Baum* v. *Bosworth*, 68 Wis. 196; *Anderson* v. *Patterson*, 64 Wis. 557.

A deed is fraudulent or not, according to the intent of the assignor; honesty of purpose in the assignee is not the test.

Wilson v. *Forsyth*, 24 Barb. 105; *Rathbun* v. *Platner*, 18 Barb. 272; *Cuyler* v. *McCartney*, 40 N. Y. 221; *Putnam* v. *Hubbell*, 42 N. Y. 106; *Talcott* v. *Hess*, 31 Hun, 282; *Tappenden* v. *Burgess*, 4 East, 230; *Eigenburn* v. *Smith*, 98 N. C. 207; *Beasley* v. *Bray*, Id. 266; *Savage* v. *Knight*, 92 N. C. 493; *Livermore* v. *McNair*, 34 N. J. Eq. 478.

A trader is in insolvent circumstances when he is not in a condition to pay his debts in the ordinary course of business, as persons carrying on trade usually do, without reference to the amount of his property.

Re Goldschmidt, 3 Nat. Bank. Reg. 165; *Re Freeman*, 4 Nat. Bank. Reg. 64; *Re Lutgens*, 7 Pac. L. R. 89; *Re Pearce*, 21 Vt. 611; *Re Brodhead*, 2 Nat. Bank. Reg. 278; *Re Ely*, 1 N. Y. Legal Obs. 343; *Sawyer* v. *Turpin*, 5 Nat. Bank. Reg. 339; *Re Walton*, Deady, 598, Id. 443; *Wager* v. *Hall*, 83 U. S. 16 Wall. 584 (21: 504) and cases cited; *Buchanan* v. *Smith*, 83 U. S. 16 Wall. 308 (21: 287), *Toof* v. *Martin*, 80 U. S. 13 Wall. 40 (20: 481); *Dutcher* v. *Wright*, 94 U. S. 553 (24: 130).

A deed not at first fraudulent may afterwards become so by being concealed, or not pursued, by which means creditors are drawn in to lend their money.

Hildreth v. *Sands*, 2 Johns. Ch. 35; *Scrivener* v. *Scrivener*, 7 B. Mon. 376; *Bank of U. S.* v. *Housman*, 6 Paige, 526; *Beecher* v. *Clark*, 12 Blatchf. 256; *Blennerhassett* v. *Sherman*, 105 U. S. 100 (26: 1080); *Fishel* v. *Lockard*, 52 Ga. 632; *Hilliard* v. *Cagle*, 46 Miss. 309; *Worseley* v. *Demattos*, 1 Burr. 467; *Tarback* v. *Marbury*, 2 Vern. 510; *Barker* v. *Barker*, 2 Woods, 87; *Coates* v. *Gerlach*, 44 Pa. 43; *Hafner* v. *Irwin*, 1 Ired. L. 490; *Hildeburn* v. *Brown*, 17 B. Mon. 779; *Thouron* v. *Pearson*, 29 N. J. Eq. 487, *Stewart* v. *Hopkins*, 30 Ohio St. 502; *Warner* v. *Norton*, 61 U. S. 20 How. 448 (15: 950); *McWilliams* v. *Rodgers*, 56 Ala. 87; *Twyne's Case*, 3 Coke, 80.

The selection of near relatives as assignees is a circumstance against the assignment.

Bumpas v. *Dotson*, 7 Humph. 310; *Nesbitt* v. *Digby*, 13 Ill. 387; *Baldwin* v. *Buckland*, 11 Mich. 389; *Shultz* v. *Hoagland*, 85 N. Y. 464; *Forsyth* v. *Matthews*, 14 Pa. 100; *Harrell* v. *Mitchell*, 61 Ala. 271; *Engraham* v. *Pate*, 51 Ga. 537; *Sherman* v. *Hogland*, 73 Ind. 473; *Marshall* v. *Croom*, 60 Ala. 121; *Fisher* v. *Shelver*, 53 Wis. 501; *Seitz* v. *Mitchell*, 94 U. S. 580 (24: 179); *Simms* v. *Morse*, 4 Hughes, 582; *Gollober* v. *Martin*, 33 Kans. 252; *Fisher* v. *Herron*, 22 Neb. 183.

Anything out of the usual course of business is a badge of fraud. An unusual mode of payment is also. So is concealment, or secrecy, or embarrassment, etc.

Callan v. *Statham*, 64 U. S. 23 How. 477 (16: 582); *Hudgins* v. *Kemp*, 61 U. S. 20 How. 45 (15: 853); *McRea* v. *Branch Bank of Ala.* 60 U. S. 19 How. 376 (15: 688); *Duvall* v. *Waters*, 2 Rob. (Va.) 280; *Borland* v. *Walker*, 7 Ala. 269; *Chapel* v. *Clapp*, 29 Iowa, 191; *Borland* v. *Mayo*, 8 Ala. 104; *Gibbs* v. *Thompson*, 7 Humph. 179; *Comstock* v. *Rayford*, 12 Smedes & M. 369; *Sayre* v. *Fredericks*, 16 N. J. Eq. 205; *Richards* v. *Swan*, 7 Gill, 366; *McNeal* v. *Glenn*, 4 Md. 87; *Hooker* v. *Mather*, 7 Cow. 301; *Merrill* v. *Locke*, 41 N. H. 486.

The mortgage was fraudulent in law as to creditors and void.

Southard v. *Benner*, 72 N. Y. 424; *Dutcher* v. *Swartwood*, 15 Hun, 31; *Edgell* v. *Hart*, 9 N. Y. 213-219; *Potts* v. *Hart*, 99 N. Y. 168; *Brackett* v. *Harvey*, 91 N. Y. 214.

Where an assignment of itself shows that it must necessarily have the effect of defrauding the creditors of the assignor, it is conclusive evidence of a fraudulent intent, and the assignment will be held void.

Cunningham v. *Freeborn*, 1 Edw. Ch. 256; *S. C.* 3 Paige, 557; *S. C.* 11 Wend. 240; *Ames* v. *Blunt*, 5 Paige, 13, 22; *Smith* v. *Acker*, 23 Wend. 653; *Sturtevant* v. *Ballard*, 9 Johns. 337; *Etting* v. *Bank of U. S.* 24 U. S. 11 Wheat. 59 (6: 419); *Goodrich* v. *Downs*, 6 Hill, 438; *Webb* v. *Daggett*, 2 Barb. 9; *Strong* v. *Skinner*, 4 Barb. 546.

Whenever the effect of a particular transaction with a debtor is to hinder, delay or defraud creditors, the law infers the intent. A different intent cannot be shown by parol testimony, nor deduced from surrounding circumstances.

Sims v. *Gaines*, 64 Ala. 396; *Pope* v. *Wilson*, 7 Ala. 694; *Wiley* v. *Knight*, 27 Ala. 336; *Potter* v. *McDowell*, 31 Mo. 69; *Bentz* v. *Rockey*, 69 Pa. 77; *Harman* v. *Hoskins*, 56 Miss. 142; *Allan* v. *McTavish*, 8 Ont. App. Rep. 440 and

cases cited; *Coleman* v. *Burr*, 93 N. Y. 31, and cases cited.

Where the debtor places his property beyond the reach of legal process, so as to delay creditors, this is a legal fraud, although he may intend ultimately to appropriate it for the benefit of all or a part of them.

Linn v. *Wright*, 18 Tex. 317; *Hefner* v. *Metcalf*, 1 Head, 577; *Hoffman* v. *Mackall*, 5 Ohio St. 124; *Sutton* v. *Hanford*, 11 Mich. 513; *Nicholson* v. *Leavitt*, 6 N. Y. 510; *S. C.* 10 N. Y. 591; *S. C.* 4 Sandf. 252; *Wheelden* v. *Wilson*, 44 Me. 11; *Kimball* v. *Thompson*, 4 Cush. 441; *Stovall* v. *Farmers & M. Bank*, 8 Smedes & M. 305; *McLean* v. *Lafayette Bank*, 3 McLean, 587.

The parties to a written instrument are conclusively presumed to intend what is expressed on the face, and if its terms are fraudulent, it cannot be supported by proof that they were inserted through inadvertence or mistake.

Cason v. *Murray*, 15 Mo. 378; *Brown* v. *Osgood*, 25 Maine, 505; *Rex* v. *Nottingham*, Lane, 42; *Warneford's Case*, Dyer, 193; *Miner* v. *Warner*, 2 Grant, 448; *Hoke* v. *Henderson*, 3 Dev. L. 12; *Gruber* v. *Boyles*, 1 Brev. (S. C.) 266; *Dardenne* v. *Hardwick*, 4 Eng. (Ark.) 482; *Warner* v. *Percy*, 22 Vt. 155; *Reed* v. *Noxon*, 48 Ill. 323; *Grover* v. *Wakeman*, 11 Wend. 187; *Green* v. *Trieber*, 3 Md. 11; *Galt* v. *Dibrell*, 10 Yerg. 146; *Stone* v. *Grubham*, 2 Bulst. 217; *Weller* v. *Wayland*, 17 Johns. 102; *Claytor* v. *Anthony*, 6 Rand. (Va.) 285; *Sommerville* v. *Horton*, 4 Yerg. 541; *State* v. *Benoist*, 37 Mo. 500; *Runyon* v. *Leary*, 4 Dev. & B. L. 231; *Fuller* v. *Acker*, 1 Hill, 473; *August* v. *Seeskind*, 6 Coldw. 166; *Hooper* v. *Tuckerman*, 3 Sandf. 311.

Fraud will be presumed in courts of equity from the circumstances of the case.

Ward v. *Lamberth*, 31 Ga. 150; *Kendall* v. *Hughes*, 7 B. Mon. 368; *Pope* v. *Andrews*, Smedes & M. Ch. 185; *White* v. *Trotter*, 14 Smedes & M. 30; *Burch* v. *Smith*, 15 Tex. 219; *King* v. *Moon*, 42 Mo. 551; *Gallatin* v. *Cunningham*, 8 Cow. 361; *Booth* v. *Bunce*, 33 N. Y. 139; *Briscoe* v. *Bronaugh*, 1 Tex. 326; *Chesterfield* v. *Janssen*, 2 Ves. Sr. 155; 1 Story, Eq. § 190; *Hardy* v. *Skinner*, 9 Ired. L. 194; *Moore* v. *Collins*, 3 Dev. L. 126; *Hafner* v. *Irwin*, 1 Ired. L. 490; *Cannon* v. *Peebles*, 2 Ired. L. 449; 4 Ired. L. 204; *Dewey* v. *Littlejohn*, 2 Ired. Eq. 495; *Hardy* v. *Simpson*, 13 Ired. L. 132; *Cheatham* v. *Hawkins*, 76 N. C. 335; *Holmes* v. *Marshall*, 78 N. C. 262; *Cheatham* v. *Hawkins*, 80 N. C. 161; *Bynum* v. *Miller*, 89 N. C. 393; *Boone* v. *Hardie*, 83 N. C. 470.

Messrs. **W. W. Flemming** and **Willis B. Dowd**, for respondents:

Where a trust has been executed before the filing of the bill to set it aside, the court will not take jurisdiction.

Burr. Assign. § 507; *Carroll* v. *Johnston*, 2 Jones, Eq. 120.

The deed of trust not fraudulent in law.

Allen v. *Massey*, 84 U. S. 17 Wall. 351 (21: 542); *Young* v. *Boos*, 11 Ired. L. 347; *Hardy* v. *Skinner*, 9 Ired. L. 191; *Lee* v. *Flannagan*, 7 Ired. L. 471; *Gilmer* v. *Earnhardt*, 1 Jones, L. 659; *Robinson* v. *Elliott*, 89 U. S. 22 Wall. 513 (22: 758); *Tompkins* v. *Wheeler*, 41 U. S. 16 Pet. 106 (10: 903); Burr. Assign. 371; *Dewey* v. *Littlejohn*, 2 Ired. Eq. 495, 507; *Hafner* v. *Irwin*, 1 Ired. L. 490; *Irwin* v. *Wilson*, 3 Jones, Eq. 210.

Deed of trust not fraudulent in fact. A conveyance upon a valuable consideration cannot be declared void as to creditors, though made with a fraudulent purpose on the part of the vendor, unless the vendee participates in or had notice of such purpose.

Lassiter v. *Davis*, 64 N. C. 498; *Reiger* v. *Davis*, 67 N. C. 185; *Humphreys* v. *Ward*, 74 N. C. 784; *Worthy* v. *Caddell*, 76 N. C. 82; *Astor* v. *Wells*, 17 U. S. 4 Wheat. 466 (4: 616); *Lee* v. *Flannagan*, 7 Ired. L. 471; *Lewis* v. *Sloan*, 68 N. C. 557; *Hislop* v. *Hoover*, Id. 141; *Tompkins* v. *Wheeler*, 41 U. S. 16 Pet. 106 (10: 903); *Allen* v. *Massey*, 84 U. S. 17 Wall. 351 (21: 542).

Mr. Justice **Miller** delivered the opinion of the court:

This is an appeal from a decree of the Circuit Court of the United States for the Western District of North Carolina, dismissing a bill brought by Paul B. Means, assignee in bankruptcy of Charles G. Montgomery and Charles D. Dowd, partners, composing the firm of Montgomery & Dowd, against Clement Dowd, A. B. Davidson, Charles G. Montgomery, and Charles D. Dowd.

On and prior to the 24th day of April, 1876, the firm of Montgomery & Dowd carried on a mercantile business in the Town of Concord, North Carolina. About that time they became embarrassed, and on that day made a conveyance in writing of all their goods and personal property to A. B. Davidson and Clement Dowd, of Charlotte, in the same State, which instrument is variously called a "deed of trust," an "assignment," or a "mortgage." Although the grantors asserted that they did not consider themselves as being insolvent at the time, it is very evident now, in the light of subsequent circumstances, that they were entirely so. They had a very considerable stock of goods, which does not seem to have been inventoried [274] in reference to this transfer, and a large amount relatively to their business was outstanding debts due them growing out of that business. The stock of goods was old and needed replenishing; the notes and accounts due them were in many cases worthless and never have been paid. They were also indebted in a large amount (quite as much probably as they were worth) to certain banks in Charlotte upon promissory notes, endorsed by A. B. Davidson and Clement Dowd; sometimes jointly and in other cases separately.

Davidson was the father-in-law of Charles G. Montgomery and the vice president of the Merchants' and Farmers' National Bank, one of the creditors secured by this conveyance. Clement Dowd, the other grantee, was a brother of Charles D. Dowd, one of the grantors, and also president of the Commercial National Bank, a preferred creditor. W. J. Montgomery was a brother of Charles G. Montgomery, and he and Davidson and Clement Dowd appear as endorsers upon some of the notes set forth in the instrument referred to.

This conveyance, although made in April, was not placed on record until the 12th day of July, 1876, thereafter, and the grantors, Montgomery & Dowd, remained in possession and

had absolute control of the property until shortly after that period. The instrument itself is filed as "Exhibit A," and reads as follows:

"EXHIBIT A.

"This indenture, made this 24th day of April, 1876, by Chas. G. Montgomery and Chas. D. Dowd, partners, trading under the firm and style of Montgomery & Dowd, of Concord, North Carolina, parties of the first part, and A. B. Davidson, and C. Dowd, of Charlotte, in the State aforesaid, parties of the second part, witnesseth: That whereas the parties of the first part are indebted as follows: By a certain promissory note, of even date with these presents, given to the Commercial National Bank of Charlotte, N. C., for three thousand dollars, and endorsed by the said A. B. Davidson and C. Dowd; also by a certain other note to the said bank for one thousand dollars, dated the — day of ——, 1876, due at sixty days, and endorsed by W. J. Montgomery; also by another note of five hundred dollars to the said bank of even date herewith, endorsed by C. Dowd, and due at sixty days; also by another note to said bank of thirty-four hundred dollars, secured by customer's notes in the hands of Montgomery & Everitt, att'ys, bearing date the — day of ——, and due at sixty days; also by two other notes of one thousand dollars each to the First National Bank of Charlotte, endorsed by A. B. Davidson, dated, respectively, on the 25th March and 5th April, 1876, and running to maturity at sixty days; also by a note to the Merchants' & Farmers' National Bank of Charlotte for one thousand dollars, dated the — day of ——, 1876, at sixty days, and endorsed by A. B. Davidson; also by another note to the last named bank for five hundred dollars, endorsed by W. H. Lilly; also by another note to said M. F. National Bank for one thousand dollars, endorsed by J. R. Neisler, and by another note to said bank for five hundred dollars, endorsed by R. S. Harris; also by a note to Martin Boyer, Jr., —— dollars, and note to D. P. Boger for ——; also by a note to J. A. Lilly for four hundred dollars:

"Now, in order to provide for the payment of the said debts, and to indemnify and save harmless the said endorsers, the parties of the first part do hereby bargain, sell, convey and transfer unto the said A. B. Davidson and C. Dowd the following property, to wit: The entire stock of goods, wares, and merchandise of every kind and description now in the possession of the parties of the first part and in and about their store in Concord, together with all the fixtures and personal property used in connection with the said store and business; also such goods, wares, and merchandise as the parties of the first part may purchase to renew or replenish the said stock; also all the notes, accounts, mortgages, judgments, and other evidences of debt due and belonging to the parties of the first part, from whomsoever and howsoever the same may be due.

"To have and to hold the said property and the said choses in action and evidences of debt to the said A. B. Davidson and C. Dowd, their executors and assigns, in special trust as follows:

[275]

[276] "The said parties of the first part are to remain in the possession of the said property and choses in action and continue to sell the goods for cash only and to collect, under the direction and control of the parties of the second part, the proceeds to be deposited weekly in the Commercial National Bank of Charlotte, N. C., and applied under the direction of the parties of the second part to replenish the stock by such small bills as may be agreed upon and to the payment of the debts of the said firm as follows: First, after deducting and retaining the commissions and other expenses of this trust, to the payment of the note of three thousand dollars to the Commercial National Bank of Charlotte, of even date herewith, endorsed by the said A. B. Davidson and C. Dowd, the same being given for money this day borrowed for the exclusive use and benefit of the said firm and also to the payment of any renewal or substitution of the said note and of any other note or notes that may hereafter be given by said firm, and endorsed by the said parties of the second part, or either of them, not being renewals of the notes endorsed by them, or either of them, mentioned and provided for in the next class; secondly, to the payment of all the debts hereinafter mentioned, except the debt of three thousand dollars and other possible indebtedness hereafter to be incurred, as provided for in the first class above named; thirdly, to the payments of all the other indebtedness of the said firm, howsoever and to whomsoever the same may be due, any surplus to be paid over to the parties of the first part or their legal representatives or assigns.

"And it is further the understanding and agreement that if any of the said debts or any renewal or substitution of them, or any of them, shall not be paid when the same shall become due, or if, for any other cause the parties of the second part may so elect, then and in that case it shall be lawful for the parties of the second part, and they are hereby expressly authorized, to take possession of the said goods and merchandise, and all the property and choses in action conveyed herein, and dispose of the same at public or private sale, as they may deem best, applying the proceeds as hereinbefore directed.

"In witness whereof the parties of the first part do hereto set their hands and seals the day and year aforesaid. [277]

"(S'g'd) CHAS. G. MONTGOMERY. [SEAL.]
" CHAS. D. DOWD. [SEAL.]

"Witness: W. P. SIMPSON.

"Probated July 11, 1876. Registered same day."

It appears that at the term of the Concord Superior Court, held in July, 1876, a suit was pending against the bankrupts in favor of Calvin Chestnut, one of the unsecured creditors, which had been in the hands of an attorney for collection since sometime during the preceding April. Several of the New York creditors also commenced proceedings during the autumn of that year against the insolvent firm, and obtained judgments at the October Term of the United States Circuit Court against Charles G. Montgomery and the firm of Montgomery & Dowd. After executions issued thereon had been returned *nulla bona*, these creditors filed a bill to set aside the deed executed by the firm as fraudulent and void.

In December, 1876, proceedings were instituted by which the firm of Montgomery & Dowd were adjudicated bankrupts, and the appellant, Means, was duly appointed their assignee in bankruptcy. Very soon afterwards he commenced the present suit in the circuit court to set aside the conveyance above recited as being fraudulent and void under the Statute of 13 Elizabeth and the United States Bankrupt Act. After the filing of this bill the complainants in the first one, the New York creditors above referred to, proved their debts in bankruptcy, and asserted their lien upon the assets created by the bill in equity filed in December, 1876; and the first suit has been considered in abeyance ever since and treated as merged in the proceeding instituted by the assignee in bankruptcy.

To the bill brought by the assignee both of the grantors and the grantees in the deed of assignment were made defendants, and each of them filed answers. There is the usual denial of any fraudulent purpose in the transaction, and allegations that the parties were doing the best they could under the circumstances to secure a proper distribution of their property
278] among their creditors. After considerable testimony was taken, in which all the parties to the deed were sworn, the circuit court dismissed the bill, and it is from that decree that the assignee has taken the present appeal.

We are of the opinion that, whether the case be decided upon the face of the instrument itself, or in view of the testimony as to the conduct of the parties, the decree should be in favor of the complainant. The principles, if not the exact language, of the Statute of 13 Elizabeth have been accepted in the equitable jurisprudence of nearly all the States of common-law origin, and they are the law of North Carolina, with a modification which is attempted to be applied to this case. That is, that where the question of the validity of an instrument of this kind, or any other conveyance of property, depends upon its fraudulent character, it must be shown that the grantee partic-
281] ipated in the fraud, and the fact that the grantor alone is guilty of it is not sufficient to invalidate the instrument.

Conceding this to be the doctrine of the State of North Carolina, we are of opinion that it can have no important application to the case before us, because the fraud here is one in law as distinguished from actual fraud; that is to say, that while the parties to this transaction, either grantors or grantees, probably never had in view the ultimate loss of the debts of the unsecured creditors by their acts, and may really have supposed that they were taking the best means to insure payment to them all, yet the law has said that the means which they took is to be regarded as a fraud in law by necessary implication.

All experience has shown how very common it is for failing or insolvent debtors, who have any considerable means on hand, and especially in cases where a mercantile business of considerable value is still going on, to delude themselves with the idea that if they can get time they can pay their debts; that if their creditors will delay until they can make such arrangements as they believe themselves capable of, they will be able to pay everybody, and even to save a very considerable surplus out of their business. This delusion leads them to undertake to obtain this delay by means which the law does not sanction. If the creditors refuse to extend time on their obligations, and thus give them the delay which they deem necessary, or if they fear to expose their condition to their creditors, they adopt, in many instances, the principle of making an absolute sale to certain friends, who will settle up their affairs and return to them any surplus; or they make assignments or deeds of trust, conveying the title to all their property to some trustee or assignee, and vesting it in them, thus opposing an obstruction to the efforts of creditors at law to collect the amounts which may be due to them. In this manner they frequently take the law into their own hands, and attempt to secure that delay which can only be obtained by the consent of the creditors, or by such a conveyance as leaves the creditors in no worse condition than they were before.

It has always been held that whatever transfer of this character, that is, of the title to [282]
property by a failing or insolvent debtor, may be valid, any instrument which secures to the assignor an interest in or an unlimited control over the property conveyed, and which has the effect of hindering or delaying creditors, is void as being a fraud upon those creditors.

A very similar case to the one before us was that of *Griswold* v. *Sheldon*, 4 N. Y. 581, in which the court decided that the mortgage which, besides permitting the mortgagor by its terms to retain possession of the goods, and on its face conferred on him the power to sell and dispose of them as his own, was, therefore, fraudulent and void in law as to creditors.

Another decision of like character was made in *Nicholson* v. *Leavitt*, 6 N. Y. 510, the head note of which correctly expresses what was decided in the following words: "An assignment by insolvent debtors of their property to trustees for the benefit of their creditors, authorizing the trustees to sell the assigned property *upon credit*, is fraudulent and void as against the creditors of the assignors."

This is founded upon the ground that such a provision has the effect of hindering and delaying creditors.

A very instructive case, and very like the one before us, is that of *Davis* v. *Ransom*, 18 Ill. 396. A chattel mortgage of a stock of goods had been made, reciting the indebtedness of the mortgagor, but with an agreement that he should keep possession of the goods and sell them in the usual course of trade. Out of the proceeds he was to pay certain preferred creditors, dividing the remainder *pro rata* among the others, with the right in the mortgagee to take possession of the property under certain contingencies. This mortgage was held void upon the principles already cited.

To the same effect is the case of *Second Nat. Bank of Leavenworth* v. *Hunt*, 78 U. S. 11 Wall. 392 [20:190], which cites with approval the case of *Griswold* v. *Sheldon*, *supra*.

But this whole subject has been so frequently discussed in the American courts that it would be an immense labor to go very extensively into the authorities. The prevailing doctrine, however, is unquestionably that which we have stated; and its fundamental essence is that an [283]
insolvent debtor making an assignment, even

for the benefit of his creditors, cannot reserve to himself any beneficial interest in the property assigned, or interpose any delay, or make provisions which would hinder and delay creditors from their lawful modes of prosecuting their claims.

In the case before us the whole face of the instrument has the obvious purpose of enabling the insolvent debtors who made it to continue in their business unmolested by judicial process, and to withdraw everything they had from the effect of a judgment against them; for it is shown that, except the goods in this place of business transferred by the conveyance, they had nothing of value but one or two pieces of real estate incumbered by mortgage for all they were worth. It specifically provides that the grantors shall remain in possession of the said property and choses in action, with the right to continue to sell the goods and collect the debts under the control and direction of the grantees. The collections were to be deposited weekly in the Commercial National Bank of Charlotte, N. C., and applied, under the direction of the assignees, "to replenish the stock by such small bills as may be agreed upon, and to the payment of the debts of the said firm," specifically mentioned therein, being principally notes held by the banks, indorsed by the grantees, Davidson and Dowd. It also contained a provision for the renewal of these notes, without limitation as to time, and authorizing the trustees, "If any of the said debts or any renewal or substitution of them, or any of them, shall not be paid when the same shall become due, or if, for any other cause, the parties of the second part may so elect, then and in that case it shall be lawful for the parties of the second part, and they are hereby expressly authorized, to take possession of the said goods and merchandise, and all the property and choses in action conveyed herein, and dispose of the same at public or private sale, as they may deem best, applying the proceeds as hereinbefore directed."

It is difficult to imagine a scheme more artfully devised between insolvent debtors and their preferred creditors to enable the former to continue in business, at the same time withdrawing their property used in its prosecution [284] from the claims of other creditors which might be asserted according to the usual forms of law. So long as these debtors were able to pay the interest, and keep the trustees satisfied that they were not going to lose anything by the delay, the business could go on and the property of the insolvent firm be safe from execution and attachment.

The interest paid on these renewals was twelve per cent, and as the indorsers on the notes were officers of the banks who held the paper, as well as trustees under this assignment, to say nothing of the fact that they were closely related to the bankrupt debtors, it is easy to be seen that, as long as they had security, they would be willing to renew these notes and indorse them on each renewal. So that by the mere expedient of paying the interest on this indebtedness Montgomery & Dowd had it in their power to continue in their business, whether profitable or otherwise, with a large stock of goods on their shelves, and defy the creditors who were not protected. The authority to take possession of the goods, even when the trustees should deem such action proper, is accompanied by no direction for an immediate sale or winding up of the business; but, on the contrary, their discretion, as to whether they shall take possession or not, and as to how or upon what terms they shall sell, seems to be absolute, and intended even then to be controlled for their own benefit and that of the debtors, without regard to the unsecured creditors.

The case before us is almost precisely like that of *Robinson* v. *Elliott*, 89 U. S. 22 Wall. 513 [22:758]. In that action it appeared that John and Seth Coolidge were partners in the retail dry goods trade in Evansville, Indiana; that they owed the First National Bank $7,600, and a Mrs. Sloan $3,174, for money previously borrowed of her to aid them in their business. To secure to Mrs. Sloan the payment of what was due her, and to indemnify Robinson, who was an indorser, they made to them a chattel mortgage upon their stock of goods then in a rented store. The mortgage, after reciting the liability of the firm to Robinson on the notes indorsed by him, stated that it was contemplated that it might become necessary to renew the notes or to discount other notes. It [285] was also stated that the note to Mrs. Sloan might be renewed at maturity if it was not convenient for the firm to pay it. The mortgage then proceeded in the following language: "And it is hereby expressly agreed that until default shall be made in the payment of some one of said notes, or some paper in renewal thereof, the parties of the first part may remain in possession of said goods, wares and merchandise, and may sell the same as heretofore and supply their places with other goods, and the goods substituted by purchase for those sold shall, upon being put into said store, or any other store in said city, where the same may be put for sale by said parties of the first part, be subjected to the lien of this mortgage."

Although the mortgage was duly recorded, it was held by this court to be void under the Statute of Frauds of Indiana. Section 10 of that Act declared that no such assignment or mortgage should be valid unless acknowledged "as provided in cases of deeds of conveyance, and recorded in the recorder's office of the county where the mortgagor resides, within ten days after the execution thereof." Section 21 makes the further provisions: "The question of fraudulent intent in all cases arising under the provisions of this Act shall be deemed a question of fact; nor shall any conveyance or charge be adjudged fraudulent as against creditors or purchasers solely upon the ground that it was not founded on a valuable consideration."

This court, in a lengthy review of the effect of Recording Acts, and of the doctrine of the Statute of 13 Elizabeth, held that the recording of the mortgage contemplated by the statute was intended as a substitute for possession, but "was not meant to be a protection for all the other stipulations contained in it." It was also held that the court was the proper party to say whether on its face the mortgage was void, and that it was so void.

It was argued in that case that there could be no such thing as constructive fraud, because under this statute the question of fraudulent

intent was one of fact; but this court, following the Supreme Court of Indiana, said that
286] those provisions of the statute of that State had not changed the law on the subject, and that the court must in the first instance determine upon the legal effect of the written instrument, and if that be to delay creditors, it must be rejected.

In the opinion the court said: "But there are features engrafted on this mortgage which are not only to the prejudice of creditors, but which show that other considerations than the security of the mortgagees, or their accommodation even, entered into the contract. Both the possession and right of disposition remain with the mortgagors. They are to deal with the property as their own, sell it at retail, and use the money thus obtained to replenish their stock. There is no covenant to account with the mortgagees, nor any recognition that the property is sold for their benefit. Instead of the mortgage being directed solely to the *bona fide* security of the debts then existing, and their payment at maturity, it is based on the idea that they may be indefinitely prolonged. As long as the bank paper could be renewed, Robinson consented to be bound; and in Mrs. Sloan's case it was not expected that the debt would be paid at maturity, but that it would be renewed from time to time, as the parties might agree. It is very clear that the instrument was executed on this theory that the business could be carried on as formerly by the continued indorsement of Robinson, and that Mrs. Sloan was indifferent about prompt payment. The correctness of this theory is proved by the subsequent conduct of the parties; for the mortgagees remained in possession of the property, and bought and sold and traded in the manner of retail dry-goods merchants from July 7, 1871, to August 7, 1873. . . . It hardly need be said that a mortgage which, by its very terms, authorizes the parties to accomplish such objects is, to say the least of it, constructively fraudulent. Manifestly it was executed to enable the mortgagors to continue their business, and appear to the world as the absolute owners of the goods, and enjoy all the advantages resulting therefrom. . . . This conduct is the result of trust and confidence, which, as Lord Coke tells us, are ever found to constitute the apparel and cover of fraud. . . . Whatever may have been the motive which
287] actuated the parties to this instrument, it is manifest that the necessary result of what they did do was to allow the mortgagors, under cover of the mortgage, to sell the goods as their own, and appropriate the proceeds to their own purposes; and this, too, for an indefinite length of time. A mortgage which, in its very terms, contemplates such results, besides being no security to the mortgagees, operates in the most effectual manner to ward off other creditors; and where the instrument on its face shows that the legal effect of it is to delay creditors, the law imputes to it a fraudulent purpose. The views we have taken of this case harmonize with the English common-law doctrine, and are sustained by a number of American decisions."

Other authorities sustain this view of the subject, and the instrument now under consideration, in the opinion of the court, contains all the elements denounced in the case above quoted of *Robinson* v. *Elliott*, as proof of constructive fraud.

If we examine into the acts of the parties in connection with this transfer, we shall see that they were in accordance with this purpose of hindering and delaying creditors. There was but one witness to the instrument and he was the confidential bookkeeper of the bankrupts. He states that he put his name to it as a witness on the day that it bears date, but that he did not read it, nor was he informed of its contents; and although it is said by some witness that the conveyance was delivered at or about the time it is dated, the grantees were not present when this witness put his name to it.

The law of North Carolina, like that of all other States, provides for the recording of such instruments as this, and that until so recorded they are not valid as against creditors and purchasers without notice. In the present case it was kept from record from the time of its date, the 24th of April, until the 11th day of July thereafter. This was undoubtedly the act of the grantees in the deed, the parties whose obligations for the bankrupts were secured by it, and who were the trustees appointed by it for its execution. The period it was thus kept secret was as long as it could be with safety to the purpose of hindering and delaying creditors; for as soon as it was known that Calvin [288]
Chestnut was about to procure a judgment, which either by virtue of the judgment itself, or by a levy of an execution upon the goods, would become a lien, the paper was recorded for the undoubted purpose of preventing this result.

The bankrupts were permitted for several months to continue in the possession and control of these goods, and to deal with them as their own; and even when the trustees did seem to consider it necessary to interpose and take the matter into their own hands, the manner in which they did it is open to animadversion. It does not appear that they went in person to the building and took possession of it or of the goods. On the contrary they made no change in its appearance, or in the manner of conducting the business. No sign was put up indicating that any change of ownership had taken place. The same books were currently kept by the same bookkeeper, and entries were made in the same manner as before. The two bankrupts were also employed by the assignees to conduct the business, at a salary of one hundred dollars per month each; and they continued it in precisely the same manner as it had been previously, with the exception of depositing the moneys arising therefrom, as they allege, in bank according to the directions of the trustees. In fact, so far as the outside public was concerned, the whole affair was conducted before the recording of this assignment, and until the appointment of the assignee in bankruptcy, in the same manner that it had always been before the conveyance was executed. Then it seemed to occur to the trustees that the time had come to wind up this business; and although it was not done with any extraordinary expedition, it is not necessary to hold that there was anything actually fraudulent in the manner in which it was finally accomplished.

These are circumstances which, taken in con-

nection with the provisions of the deed itself, show very clearly that, in the minds of the assignors and the assignees, one of the effects of this instrument, and of the operations conducted under it, was undoubtedly to hinder and delay creditors. Indeed, it is impossible to believe that this effect was not intended by all the parties to the deed.

[229] The suit in this case is not sustainable under the provision of the Bankrupt Act against a preference of creditors in fraud of the law, because the bankruptcy proceedings were not brought within the time prescribed by that Act as necessary to avoid such preference. But a right is shown to relief on the ground that the instrument was made to hinder and delay creditors.

The decree of the Circuit Court is, therefore, reversed, and the case remanded to that court, with instructions to refer the case to a master, before whom the defendants, the trustees, must account for the property conveyed to them by the instrument.

In this accounting all the creditors, secured and unsecured, must be brought into a concourse and held to an equal right in distribution of the funds arising from the sale of the goods and the *choses in action* assigned to the trustees. But in accounting with the trustees they must be credited with what they have paid to any of the creditors, so far as those creditors would be entitled on an equal and *pro rata* distribution among all the creditors of all the assets conveyed to them by the deed of trust.

---

[225] Z. N. ESTES, Surviving Partner of the Firm of ESTES, DOAN & CO., *Plff. in Err.*,

v.

TRABUE, DAVIS AND CO.

(See S. C. Reporter's ed. 225-230.)

Writ of error—designation of parties—amendment—parties to a joint judgment must all join in writ of error—substantial defect.

1. This court cannot take jurisdiction of a writ of error which describes the parties by the name of a firm, or which designates some of the parties by the expression "& Co." or the expression "and others," or in any other way than by their individual names.

2. But where the record discloses the names of the individuals who compose the firm, the writ of error can be amended in this court, under section 1005 of the Rev. Stat. section 8, Act of June 1, 1872 (chap. 255, 17 Stat. at L. 196); provided the defect has not prejudiced, and the amendment will not injure, the defendant in error.

3. Where a judgment is distinctly one against the claimants, and their sureties in a bond, jointly, for a definite sum of money, and there is nothing distributive in the judgment, all the parties against whom the judgment is entered must join in a writ of error, or else there must be a proper summons and severance, in order to allow of the prosecution of the writ by any less than the whole number of the defendants against whom the judgment is entered.

4. Where there is a substantial defect in a writ of error, which this court cannot amend, it has no jurisdiction to try the case. It will then, of its own motion, dismiss the case, without awaiting the action of a party.

[No. 50.]

Argued Oct. 31, 1888. Decided Nov. 19, 1888.

IN ERROR to the District Court of the United States for the Northern District of Mississippi, to review a judgment against principals in a bond and their sureties. *Dismissed.*

The facts are stated in the opinion.

Mr. **R. O. Reynolds**, for plaintiff in error.

Messrs. **John Mason Brown** and **W. V. Sullivan**, for defendants in error.

Mr. Justice **Blatchford** delivered the opinion of the court: [226]

This is a writ of error to the District Court of the United States for the Northern District of Mississippi, brought to review a judgment recovered on the 22d of April, 1885, in the name of Trabue, Davis & Co., as plaintiffs, against Estes, Doan & Co., as claimants. The citation in the case is addressed to Trabue, Davis & Co., and states that Estes, Doan & Co. are plaintiffs in error, and Trabue, Davis & Co. are defendants in error, and refers to the judgment as one rendered against Estes, Doan & Co. The *supersedeas* bond refers to the judgment as one rendered in favor of Trabue, Davis & Co., plaintiffs, against Estes, Doan & Co., claimants, and to the writ of error as one obtained by Estes, Doan & Co., claimants; and it purports to be executed by Z. N. Estes and J. H. Doan, members composing the firm of Estes, Doan & Co., as principals, and by two sureties; and Trabue, Davis & Co. are named as the obligees.

The original suit was an attachment suit brought in the name of Trabue, Davis & Co., against one B. F. McRae, in the Circuit Court of Tishomingo County, Mississippi, on the allegation that McRae had disposed of his property with intent to defraud his creditors. An [227] attachment was issued and was served by the sheriff upon, among other things, certain personal property described by him in his return. After such return, a claim, by affidavit, was made to the personal property so attached, as the property of Estes, Doan & Co.; and a forthcoming bond was given, executed in the name of Estes, Doan & Co, as principals, and C. F. Robinson and John W. Dillard, as sureties, to Trabue, Davis & Co., as obligees, conditioned for the payment by Estes, Doan & Co. to Trabue, Davis & Co., of all such damages as might be awarded against Estes, Doan & Co., in case their claim should not be sustained, and for the delivery of the property to the sheriff if their claim to it should be determined against them. On the back of the bond was indorsed an affidavit made by J. H. Doan, setting forth that he and Z. N. Estes were the members who composed the firm of Estes, Doan & Co. This bond was approved by the sheriff, and the property was returned to Estes, Doan & Co.

McRae filed a plea in abatement, denying the allegation of the fraudulent assignment of his property, and then the members of the firm of Trabue, Davis & Co., giving their names as James Trabue, William A. Davis, and Richard Trabue, and stating themselves to be citizens of Kentucky, and to have been such at the time the suit was brought, and McRae to have been and to be still a citizen of Mississippi, caused the suit to be removed into the said District Court of the United States. In that court a declaration was filed, in the name of the said three members of the firm of Trabue, Davis & Co., against McRae, claiming a recovery on sundry promissory notes made by McRae. On

the 13th of April, 1885, upon a trial by a jury, a judgment was entered in favor of the plaintiffs against McRae, with interest at six per cent per annum from that date, and costs. On the 22d of April, 1885, after a trial before a jury of the issue between Trabue, Davis & Co., as plaintiffs in the attachment, and Estes, Doan & Co., as claimants of the attached property, a judgment was entered, which is entitled "Trabue, Davis & Co. *v.* B. F. McRae, def't, Estes, Doan & Co., cl'm'ts."

[228] The judgment sets forth that the jury returned as their verdict that they found "for the plaintiffs," and made "the following estimate of the property," specifying it by items, substantially as in the return of the sheriff to the attachment and in the affidavit of claim made on behalf of the claimants, but with different estimates of valuation. The judgment then proceeds: "It is, therefore, considered and adjudged by the court, that the plaintiffs recover of the claimants and C. F. Robinson and John W. Dillard, their sureties in their forthcoming bond, the sum of six thousand and three hundred dollars, together with the costs, both in the suit of the plaintiffs against the defendant B. F. McRae, and the costs incident to the trial of this issue, to satisfy the judgment for said sum of six thousand and three hundred dollars rendered in favor of the plaintiffs against the defendant B. F. McRae, in this court, on the 13th day of April, 1885; but this judgment to be satisfied upon the delivery to the marshal of the property described in the claimants' affidavit, or as much thereof as may be necessary to satisfy said judgment and the costs aforesaid, and for which let execution issue against the said—and the sureties aforesaid, unless the said property is delivered to the marshal for the sale thereof by him for the satisfaction of the judgment and costs aforesaid, which property is hereby condemned for the payment of said judgment and costs, to be sold under writ of *venditions exponas* aforesaid."

A bill of exceptions is found in the record, raising certain questions as to the admission of evidence, and as to the charge of the court to the jury; but, in the view we take of the case, these cannot be considered.

Since the filing of the transcript of the record in this court, the death of J. H. Doan has been suggested, and an order of this court made that the case proceed in the name of Z. N. Estes, as surviving partner of the firm of Estes, Doan & Co.

As before stated, the writ of error is taken out in the name of Estes, Doan & Co., as plaintiffs in error, against Trabue, Davis & Co., as defendants in error, without naming in the writ of error the individuals who compose either of the firms.

It is well settled that this court cannot take jurisdiction of a writ of error which describes [229] the parties by the name of a firm, or which designates some of the parties by the expression "& Co." or the expression "and others," or in any other way than by their individual names. *Deneale* v. *Archer*, 33 U. S. 8 Pet. 526 [8:1032]; *Wilson* v. *Life & Fire Ins. Co. of N. Y.* 37 U. S. 12 Pet. 140 [9:1032]; *Davenport* v. *Fletcher*, 57 U. S. 16 How. 142 [14:879]; *Mussina* v. *Cavazos*, 73 U. S. 6 Wall. 355, 361, 362 [18:810, 812]; *Miller* v. *McKenzie*, 77 U. S. 10 Wall. 582 [19:1043]; *The Protector*, 78 U. S. 11 Wall. 82 [20:47.]

As, however, the record discloses the names of the individuals who compose both of the firms, the writ of error could be amended in this court, under section 1005 of the Revised Statutes, being section 8 of the Act of June 1, 1872 (chap. 255, 17 Stat. at L. 196), which provides that this court may, at any time, in its discretion and upon such terms as it may deem just, allow an amendment of a writ of error "when the statement of the title of the action or parties thereto in the writ is defective, if the defect can be remedied by reference to the accompanying record," "provided the defect has not prejudiced, and the amendment will not injure, the defendant in error."

In *Moore* v. *Simonds*, 100 U. S. 145 [25:590], an appeal was taken in the name of a firm, but it was taken when section 1005 was in force; and the bond showed the names of the individual members who composed the firm. This court said: "We are clear, therefore, that the defect is one that may be amended under the law as it now stands, and for that reason we will not dismiss the appeal."

But there is another difficulty in the present case, which cannot be reached by an amendment in or by this court under section 1005. The judgment is distinctly one against "the claimants, and C. F. Robinson and John W. Dillard, their sureties in their forthcoming bond," jointly, for a definite sum of money. There is nothing distributive in the judgment, so that it can be regarded as containing a separate judgment against the claimants and another separate judgment against the sureties, or as containing a judgment against the sureties payable and enforceable only on a failure to recover the amount from the claimants; and execution is awarded against all of the parties jointly. In such a case the sureties have the right to a writ of error. *Ex parte Sawyer*, 88 U. S. 21 Wall. 235, 240 [22:617, 619].

It is well settled that all the parties against [230] whom a judgment of this kind is entered must join in a writ of error, if any one of them takes out such writ; or else there must be a proper summons and severance, in order to allow of the prosecution of the writ by any less than the whole number of the defendants against whom the judgment is entered. *Williams* v. *Bank of United States*, 24 U. S. 11 Wheat. 414 [6:508]; *Owings* v. *Kincannon*, 32 U. S. 7 Pet. 399 [8:727]; *Wilson* v. *Life & Fire Ins. Co. of N. Y.* 37 U. S. 12 Pet. 140 [9:1032]; *Todd* v. *Daniel*, 41 U. S. 16 Pet. 521 [10:1054]; *Smyth* v. *Strader*, 53 U. S. 12 How. 327 [13:1008]; *Davenport* v. *Fletcher*, 57 U. S. 16 How. 142 [14:879]; *Mussina* v. *Cavazos*, 61 U. S. 20 How. 280, 289 [15:878, 879]; *Sheldon* v. *Clifton*, 64 U. S. 23 How. 481, 484 [16:429, 430]; *Masterson* v. *Herndon*, 77 U. S. 10 Wall. 416 [19:953]; *Hampton* v. *Rouse*, 80 U. S. 13 Wall. 187 [20:593]; *Simpson* v. *Greeley*, 87 U. S. 20 Wall. 152 [22:338]; *Feibelman* v. *Packard*, 108 U. S. 14 [27:634].

Where there is a substantial defect in a writ of error, which this court cannot amend, it has no jurisdiction to try the case. *Wilson* v. *Life & Fire Ins. Co. of N. Y.* 37 U. S. 12 Pet. 140 [9:1032]. It will then, of its own motion,

dismiss the case, without awaiting the action of a party. *Hilton* v. *Dickinson*, 108 U. S. 165, 168 [27: 688, 689].

For these reasons the writ of error is dismissed.

---

[383] JOHN T. STEWART, *Plff. in Err.*,

v.

THE WYOMING CATTLE RANCHE COMPANY (Limited).

(See S. C. Reporter's ed. 383-390.)

Instructions to jury—silence, not equivalent to false representation—action for deceit—instruction to jury, requested by them—exception—absence of counsel—affidavits, when not part of record.

1. Where, taking all the instructions together, of the court to the jury, they conform to the well settled law and there is no ground for supposing that the jury had been misled, the judgment will not be reversed by reason of the instructions.
2. Silence as to a material fact is not necessarily, as matter of law, equivalent to a false representation.
3. But if, with intent to deceive, either party to a contract of sale conceals or suppresses a material fact which he is in good faith bound to disclose, this is evidence of and equivalent to a false representation.
4. An instruction given by the judge to a jury, in response to a question asked by them upon coming into court after they had retired to consider their verdict, if not excepted to, is no ground of error. It is no excuse for the want of an exception that neither of the counsel were present when the instruction was given.
5. Affidavits filed in support of a motion for a new trial are no part of the record on error, unless made so by bill of exception.
6. The absence of counsel while the court is in session at any time between the impaneling of the jury and the return of the verdict, cannot limit the power and duty of the judge to instruct the jury in open court on the law of the case as occasion may require, nor dispense with the necessity of excepting to his rulings and instructions, nor give jurisdiction to a court of error to decide questions not appearing of record.

[No. 52.]

Argued Oct. 31 and Nov. 1, 1888. Decided Nov. 19, 1888.

IN ERROR to the Circuit Court of the United States for the District of Nebraska, to review a judgment for plaintiff—for deceit by false representations. *Affirmed.*

The facts appear in the opinion.

Messrs. **John N. Baldwin** and **N. M. Hubbard** for plaintiff in error.

Mr. **Wm. H. Swift**, for defendant in error:

Where the bill of exceptions does not contain any of the affidavits attached to the motion for a new trial, they cannot be considered as a part of the record, notwithstanding the fact that the clerk of the court below has copied them into the record.

Balt. & P. R. Co. v. *Sixth Presby. Ch. Trustees*, 91 U. S. 127 (23: 260); *England* v. *Gebhardt*, 112 U. S. 502 (28: 811); *Kearney* v. *Denn*, 82 U. S. 15 Wall. 51 (21: 41); *Craig* v. *Smith*, 100 U. S. 226 (25: 577); *Thomson* v. *Wooster*, 114 U. S. 104 (29: 106).

Affidavits of jurors cannot be used to impeach their verdict.

Vaise v. *Delaval*, 1 Term Rep. 11; *Harvey* v. *Hewitt*, 8 Dowl. Pr. Cas. 598; *Straker* v. *Graham*, 7 Dowl. Pr. Cas. 223; *Burgess* v. *Langley*, 5 Man. & G. 722; *Prior* v. *Powers*, 1 Keble, 811; *Owen* v. *Warburton*, 1 Bos. & P. N. R. 326; *Pleasants* v. *Heard*, 15 Ark. 403; *Wilson* v. *Berryman*, 5 Cal. 44; *Turner* v. *Tuolumne Co. Water Co.* 25 Cal. 397; *Boyce* v. *Cal. Stage Co.* Id. 474; *Chandler* v. *Barker*, 2 Harr. (Del.) 387; *Roy* v. *Goings*, 112 Ill. 656; *Drummond* v. *Leslie*, 5 Blackf. 453; *Dunn* v. *Hall*, 8 Blackf. 82; *Haun* v. *Wilson*, 28 Ind. 296; *State* v. *Doon*, 1 R. M. Charlt. 1; *Heath* v. *Conway*, 1 Bibb, 398; *Dorr* v. *Fenno*, 12 Pick. 521; *St. Martin* v. *Desnoyer*, 1 Minn. 156; *Bradt* v. *Rommel*, 26 Minn. 505; *Miller* v. *St. Louis R. Co.* 5 Mo. App. 471; *McMurdock* v. *Kimberlin*, 23 Mo. App. 523; *Sawyer* v. *Hannibal & St. J. R. Co.* 37 Mo. 240; *State* v. *Branstetter*, 65 Mo. 149; *Philips* v. *Stewart*, 69 Mo. 149; *Dodge* v. *Carroll*, 59 N. H. 237; *People* v. *Barker*, 2 Wheel. Crim. Cas. 21, 22; *Dana* v. *Tucker*, 4 Johns. 487; *Mulock* v. *Lawrence*, 5 City Hall Rec. 84; *Smith* v. *Cheetham*, 8 Cal. 61; *Cline* v. *Broy*, 1 Or. 89; *Cluggage* v. *Swan*, 4 Binn. 150; *White* v. *White*, 5 Rawle, 61; *Smith* v. *Culbertson*, 9 Rich. Law, 106; *Price* v. *McIlvain*, 2 Treadw. (S. C.) 503; *Reaves* v. *Moody*, 15 Rich. Law, 312; *Handley* v. *Leigh*, 8 Tex. 129; *Warren* v. *State*, 9 Tex. App. 619, at 632; *Cheney* v. *Holgate*, Brayton, 171; *Holmead* v. *Corcoran*, 2 Cranch, C. C. 119; *Chesapeake & O. R. Co.* v. *Patton*, 9 W. Va. 648.

It was the duty of the attorneys for the parties to remain in attendance upon the court during such time as the court was in session, until the jury returned their verdict, and it was not obligatory upon the court to send for them if they were absent.

Chapman v. *Chicago & N. W. R. Co.* 26 Wis. 295.

The instructions of the court upon matters of fact will not be reviewed by this court.

Carver v. *Jackson*, 29 U. S. 4 Pet. 1 (7: 761); *Magniac* v. *Thompson*, 32 U. S. 7 Pet. 348 (8: 709).

Honesty of purpose prompts frankness of statement. Concealment is indicative of fraud.

Cosby v. *Buchanan*, 90 U. S. 23 Wall. 420 (23: 138); *Matthews* v. *Bliss*, 22 Pick. 48.

Circumstantial evidence of fraud produces conviction in the mind often of more force than direct testimony.

Kempner v. *Churchill*, 75 U. S. 8 Wall. 362 (19: 461).

The use of any device by the vendor to induce the buyer to omit inquiry or examination into the defects of the thing sold, is as much a fraud as an active concealment by the vendor himself.

1 Benj. Sales, 560, 603; Bigelow, Fraud, 469.

A statement recklessly made, without knowledge of its truth, is a false statement knowingly made.

Cooper v. *Schlesinger*, 111 U. S. 148 (28: 383); *Fisher* v. *Mellen*, 103 Mass. 503; *Beebe* v. *Knapp*, 28 Mich. 53.

A positive statement implies knowledge, and if the party who makes it has no knowledge upon the subject he has told *scienter* what is untrue.

Bigelow, Fraud, 513; *Simar* v. *Canaday*, 53 N. Y. 298.

This court can adjudge damages under sec-

tion 1010, Rev. Stat. and Rule 23, in all cases where it appears that a writ of error has been sued out merely for delay.

Amory v. *Amory*, 91 U. S. 356 (23:486).

Mr. Justice **Gray** delivered the opinion of the court:

The original action was brought by the Wyoming Cattle Ranche Company, a British corporation, having its place of business in Edinburgh in Scotland, against John T. Stewart, a citizen of Iowa. The petition contained two counts.

The first count alleged that in July, 1882, the defendant, owning a herd of cattle in Wyoming Territory, and horses going with that herd, and all branded with the same brand, and also eighty short-horn bulls, and seven hundred head of mixed yearlings, offered to sell the same with other personal property for the sum of $400,000; and at the same time represented to the plaintiff and its agent, that there had al- [384] ready been branded 2,800 calves as the increase of the herd for the current season, and that the whole branding of calves and increase of the herd for that season would amount to 4,000, and that, exclusive of the branding for that year the herd consisted of 15,000 head of cattle, and that there were 150 horses running with it and branded with the same brand; that had the representation that 2,800 calves had been branded been true, it was reasonable from that fact to estimate that the whole branding for that year would be 4,000 head, and that the whole herd exclusive of the increase for that year was 15,000 head; that the defendant, when he made these representations, knew that they were false and fraudulent, and made them for the purpose of deceiving the plaintiff and its agent, and of inducing the plaintiff to purchase the herd; and that the plaintiff, relying upon the representations, and believing them to be true, purchased the herd and paid the price.

The second count alleged that the defendant had failed to deliver the bulls and yearlings as agreed.

At the trial the following facts were proved: The defendant, being the owner of a ranche with such a herd of cattle, gave in writing to one Tait the option to purchase it and them at $400,000, and wrote a letter to Tait describing all the property, and gave him a power of attorney to sell it. He also wrote a letter describing the property to one Majors, a partner of Tait. A provisional agreement for the sale of the property, referring to a prospectus signed at the same time, was made by Tait with the plaintiff in Scotland, a condition of which was that a person to be appointed by the plaintiff should make a favorable report. One Clay was accordingly appointed, and went out to Wyoming and visited the ranche; certain books and schedules made by one Street, the superintendent of the ranche, were laid before him; and he and the defendant rode over the ranche together for several days.

Clay testified that, in the course of his interviews with the defendant, the latter made to him the false representations alleged in the petition, and requested him to rely on these representations and not to make inquiries from the foreman and other persons; and that, relying on the representations, he made a favorable [385] report to the plaintiff, which thereupon completed the purchase. The plaintiff also introduced evidence tending to prove the other allegations in the petition. The defendant testified that he never made the representations alleged.

The jury returned a general verdict for the plaintiff in the sum of $55,000, upon which judgment was rendered, and the defendant sued out this writ of error.

No exception was taken to the judge's instructions to the jury upon the second count. The only exceptions, contained in the bill of exceptions allowed by the judge, and relied on at the argument, were to the following instructions given to the jury in answer to the plaintiff's requests:

"14. I am asked by the plaintiff to give a number of instructions, a portion of which I give, and a portion of which I must necessarily decline to give. My attention is called to one matter, however, and as I cannot give the instruction as it is asked for, and as the matter it contains is, as I think, of the first importance. I will state my own views upon that particular point.

"I am asked to say to the jury, if they believe from the evidence that, while Clay was making the inspection, Stewart objected to Clay making inquiries, about the number of calves branded, of the foreman and other men, and thereby prevented Clay from prosecuting inquiries which might have led to information that less than 2,000 calves had been branded, the jury are instructed that such acts on the part of Stewart amount in law to misrepresentations.

"In reference to that point, I feel it my duty to say this to the jury, that if the testimony satisfies you that after all the documents in question that have been introduced in evidence here went into the hands of the home company in Scotland, where it had its office and where it usually transacted its business, if it was not satisfied with what appears in those papers, and if it did not see proper to base its judgment and action on the information that those papers contained, but nevertheless sent Clay to Wyoming to investigate the facts and circumstances connected with the transaction, to ascertain the number of cattle and the num- [386] ber of horses and the condition of the ranche, and the number of calves that would probably be branded; if the Company sent him there as an expert for the purpose of determining all those things for itself and for himself, and relied upon him, and he was to go upon the ranche himself, and exercise his own judgment, and ascertain from that, without reference to any conversation had with Stewart, then it would make no difference. But whilst he was in pursuit of the information for which he went there, Stewart would have no right to throw unreasonable obstacles in his way to prevent his procuring the information that he sought and that he desired. If the testimony satisfies you that when they did go there together, and whilst Clay was making efforts to procure the information which he did, and whilst he was in pursuit of it, and while he was on the right track, Stewart would have no right to throw him off the scent, so as to speak, and

prevent him, in any fraudulent and improper way, from procuring the information desired, and, if he did that, that itself is making, or equal to making, false and fraudulent representations for the purpose in question. But if Stewart did none of these things, then, of course, what is now said has no application.

"15. In determining whether Stewart made misrepresentations about the number of cattle, or the loss upon his herd, or the calf brand of 1882, the jury will take into consideration the documents made by Stewart prior to and upon the sale, namely, the power of attorney to Tait, the descriptive letter, the optional contract, letter to Majors, schedules made by Street, provisional agreement and prospectus, and his statements to Clay, if the jury finds he made any, upon Clay's inspection trip; and if the jury find that in any of these statements there were any material misrepresentations on which plaintiff relied, believing the same, which has resulted to the damage of the plaintiff, the plaintiff is entitled to recover for such damage.

"16. If the jury find from the evidence that Stewart purposely kept silent when he ought to have spoken and informed Clay of material [387] facts, or find that by any language or acts he intentionally misled Clay about the number of cattle in the herd, or the number of calves branded in the spring of 1882, or by any acts of expression or by silence consciously misled or deceived Clay or permitted him to be misled or deceived, then the jury will be justified in finding that Stewart made material misrepresentations; and must find for the plaintiff, if the plaintiff believed and relied upon the representations made by the defendant."

The judge, at the beginning and end of his charge, stated to the jury the substance of the allegations in the petition as the only grounds for a recovery in this action; and, at the defendant's request, fully instructed them upon the general rules of law applicable to actions of this description, and gave, among others, the following instructions:

"5. In order to recover on the ground of false representations, such false representations must be shown to be of a then existing matter of fact material to the transaction; and no expression of opinion or judgment or estimation, not involving the assertion of an unconditional fact, can constitute actionable false representation, and in such case the jury must find for the defendant on the first count in the petition."

"8. In order to justify a recovery, it must be shown by proof that the plaintiff's agent relied upon the alleged false representations, and made them the ground and basis of his report, but that he was so circumstanced as to justify him in so relying upon and placing confidence in said representations; and if it appears that he had other knowledge, or had received other representations and statements, conflicting therewith, sufficient to raise reasonable doubts as to the correctness of such representations, then there can be no recovery on the first count."

The judge, of his own motion, further instructed the jury that they were to decide upon the comparative weight of the conflicting testimony of Clay and of the defendant, and added: "It seems to me that the first count must hinge upon that one point, because if there was no statement made by Stewart to Clay with reference to the number of calves that were branded, during this trip of inspection of the ranche, then it seems to me that the whole theory which [388] underlies the claim of the plaintiff must be an erroneous one."

Taking all the instructions together, we are of opinion that they conform to the well settled law, and that there is no ground for supposing that the jury can have been misled by any of the instructions excepted to.

In an action of deceit, it is true that silence as to a material fact is not necessarily, as matter of law, equivalent to a false representation. But mere silence is quite different from concealment; *Aliud est tacere, aliud celare;* a suppression of the truth may amount to a suggestion of falsehood; and if, with intent to deceive, either party to a contract of sale conceals or suppresses a material fact, which he is in good faith bound to disclose, this is evidence of and equivalent to a false representation, because the concealment or suppression is in effect a representation that what is disclosed is the whole truth. The gist of the action is fraudulently producing a false impression upon the mind of the other party; and if this result is accomplished, it is unimportant whether the means of accomplishing it are words or acts of the defendant, or his concealment or suppression of material facts not equally within the knowledge or reach of the plaintiff.

The case of *Laidlaw* v. *Organ*, 15 U. S. 2 Wheat. 178 [4:214] is much in point. In an action by the buyer of tobacco against the sellers to recover possession of it, there was evidence that before the sale the buyer, upon being asked by Girault, one of the sellers, whether there was any news which was calculated to enhance its price or value, was silent, although he had received news, which the seller had not, of the Treaty of Ghent. The court below, "there being no evidence that the plaintiff had asserted or suggested anything to the said Girault, calculated to impose upon him with respect to the said news, and to induce him to think or believe that it did not exist," directed a verdict for the plaintiff. Upon a bill of exceptions to that direction, this court, in an opinion delivered by *Chief Justice* Marshall, held that while it could not be laid down, as a matter of law, that the intelligence of extrinsic circumstances which might influence the price of the commodity, and which was exclusively within [389] the knowledge of the vendee, ought to have been communicated by him to the vendor, yet, at the same time, each party must take care not to say or do anything tending to impose upon the other, and that the absolute instruction of the judge was erroneous; and the question whether any imposition was practiced by the vendee upon the vendor ought to have been submitted to the jury.

The instructions excepted to in the case at bar clearly affirmed the same rule. The words and conduct relied on as amounting to false representations were those of the seller of a large herd of cattle ranging over an extensive territory, and related to the number of the herd itself, of which he had full knowledge, or means of information, not readily accessible to a purchaser coming from abroad; and the plaintiff introduced evidence tending to show that the

defendant, while going over the ranche with the plaintiff's agent, made positive false representations as to the number of calves branded during the year, and also fraudulently prevented him from procuring other information as to the number of calves and consequently as to the number of cattle on the ranche.

In giving the fourteenth instruction, the judge expressly declined to say that if the defendant prevented the plaintiff's agent from prosecuting inquiries which might have led to information that less than 2,000 calves had been branded, such acts of the defendant would amount in law to misrepresentations; but on the contrary submitted to the jury the question whether the defendant fraudulently and improperly prevented the plaintiff's agent from procuring the information demanded; and only instructed them that if he did, that was making, or equal to making, false and fraudulent representations for the purpose in question.

So the clear meaning of the sixteenth instruction is that the jury were not authorized to find material misrepresentations by the defendant, unless he purposely kept silent as to material facts which it was his duty to disclose, or by language or acts purposely misled the plaintiff's agent about the number of cattle in the herd, or the number of calves branded, or by words or silence, knowingly misled or deceived [390] him, or knowingly permitted him to be misled or deceived in regard to such material facts, and in one of these ways purposely produced a false impression upon his mind.

The defendant objects to the fifteenth instruction, that the judge submitted to the jury the question whether the defendant made misrepresentations about the number of cattle, and about the loss upon the herd, as well as about the calf-brand of 1882. It is true that the principal matter upon which the testimony was conflicting was whether the defendant did make the representation that 2,800 calves had been branded in that year. But the chief importance of that misrepresentation, if made, was that it went to show that the herd of cattle which produced the calves was less numerous than the defendant had represented; and the petition alleged that the defendant made false and fraudulent representations, both as to the number of calves branded and as to the number of the whole herd. So evidence of the loss of cattle by death, beyond what had been represented by the defendant, tended to show that the herd was less in number than he represented.

The remaining objection argued is to an instruction given by the judge to the jury in response to a question asked by them upon coming into court after they had retired to consider their verdict. It is a conclusive answer to this objection, that no exception was taken to this instruction at the time it was given, or before the verdict was returned. The fact that neither of the counsel was then present affords no excuse. Affidavits filed in support of a motion for a new trial are no part of the record on error, unless made so by bill of exceptions. The absence of counsel, while the court is in session, at any time between the impaneling of the jury and the return of the verdict, cannot limit the power and duty of the judge to instruct the jury in open court on the law of the case as occasion may require, nor dispense with the necessity of seasonably excepting to his rulings and instructions, nor give jurisdiction to a court of error to decide questions not appearing of record.

Judgment affirmed.

UNITED STATES, *Appt.*, [262]
v.
GEORGE H. PALMER.

(See S. C. Reporter's ed. 262-272.)

Liability of Government for use of patented invention—jurisdiction of Court of Claims—right of Government.

1. Where the Government used the claimant's patented improvements, with his consent, and with the expectation on his part of receiving a reasonable compensation for the license, a claim for such compensation arises upon an implied contract; it is not a claim for an infringement.
2. The Government of the United States when it grants letters patent for a new invention or discovery confers upon the patentee an exclusive property in the patented invention which cannot be used by the Government itself without just compensation.
3. The court of claims has jurisdiction to entertain a claim for compensation from the United States for the use of a patented invention, where the claim arises upon an implied contract.
4. Whether a patentee may waive an infringement of his patent by the Government, and sue upon an implied contract, is a question not decided in this case.

[No. 54.]

(*Submitted Nov. 1, 1888. Decided Nov. 19, 1888.*)

APPEAL from a judgment of the Court of Claims against the United States, on an implied contract for a royalty for the use of a patented invention. *Affirmed.*

Reported below, 20 Ct. Cl. 432.

The facts are stated in the opinion.

Messrs. **A. H. Garland,** *Atty-Gen.*, and **Robert A. Howard,** *Assist. Atty-Gen.*, for appellant:

The court of claims erred in assuming jurisdiction of this action.

The Jurisdictional Act limits suits to obligations under contracts, express or implied, and excludes by the strongest implication demands made upon the Government founded on tort.

Gibbons v. *U. S.* 75 U. S. 8 Wall. 275 (9: 454).

The right of the parties depended upon common-law and equity principles. They are not directly connected with the patent.

Wilson v. *Sandford*, 51 U. S. 10 How. 99 (13: 344); *U. S.* v. *Weld*, 127 U. S. 51 (32: 62).

An action against the Government cannot be supported in that court upon an implied promise springing from a tort.

It was not contemplated that jurisdiction should cover any cases except those of voluntary contracts entered into by authorized agents.

Smoot's Case, 82 U. S. 15 Wall. 36 (21: 107); *U. S.* v. *Clarke*, 33 U. S. 8 Pet. 436, 444 (8: 1001, 1004); *Cary* v. *Curtis*, 44 U. S. 3 How. 236, 245 (11: 576, 581); *Beers* v. *Ark.* 61 U. S. 20 How. 527 (15: 991); *Gibbons* v. *U. S.* 75 U. S. 8 Wall. 269 (19: 453); *Perrin* v. *U. S.* 79 U. S. 12 Wall. 315 (20: 412); *U. S.* v. *Bostwick*, 94 U.

S. 53 (24: 65); *Hart* v. *U. S.* 95 U. S. 316 (24: 479); *Minturn* v. *U. S.* 106 U. S. 437 (27: 208).

Jurisdiction of the court of claims does not extend to a claim for the unauthorized use of a patented invention.

James v. *Campbell*, 104 U. S. 358, 359 (26: 787, 788).

This question of whether assumpsit may be based upon an infringement of a patent has never been passed upon by this court. We will first examine the court of claims cases:

Pitcher's Case, 1 Ct. Cl. 7; *Burns' Case*, 4 Ct. Cl. 113; *Shavor* v. *U. S.* Id. 440; *Hubbell's Case*, 5 Ct. Cl. 1; *Fletcher's Case*, 11 Ct. Cl. 748; *McKeever* v. *U. S.* 14 Ct. Cl. 396; *Morse Arms Co.* v. *U. S.* 16 Ct. Cl. 296-303.

But few cases of assumpsit have been instituted in courts of the United States, based upon an infringement of a patent, although it has been intimated on several occasions that such might be maintained.

Sayles v. *Richmond, F. & P. R. Co.* 4 Ban. & Ard. 245; *Steam Stone Cutter Co.* v. *Sheldon*, 21 Blatchf. 260; *Washington, A. & G. Steam Packet Co.* v. *Sickles*, 86 U. S. 19 Wall. 614 (22: 203); *Langford* v. *U. S.* 101 U. S. 341, 343 (25: 1011, 1012).

There is another class of cases, decided in this court, in which this question was incidentally alluded to.

James v. *Campbell*, 104 U. S. 357 (26: 787); *Hollister* v. *Benedict & B. Mfg. Co.* 113 U. S. 59-67 (28: 901-904).

Government could not have been sued in any court in an action for damages sounding in tort. If there was an injury the remedy was in Congress itself.

St. Paul Plow Works v. *Starling*, 127 U. S. 376 (*ante*, 251).

The court erred in stating the rule of the measure of damages.

The court of claims was not instituted to try a case for nominal damages.

Grant v. *U. S.* 84 U. S. 7 Wall. 331, 338 (19: 194, 196).

There could be no guide to estimate damages by the test of license fees. There had never been any sales of licenses.

Seymour v. *McCormick*, 57 U. S. 16 How. 480 (14: 1024); *Suffolk Mfg. Co.* v. *Hayden*, 70 U. 3 Wall. 315 (18: 76); *Philp* v. *Nock*, 84 U. S. 17 Wall. 460, 462 (21: 679); *Root* v. *Lake Shore & M. S. R. Co.* 105 U. S. 189 (26: 975); *Tilghman* v. *Proctor*, 125 U. S. 136 (31: 664).

Mr. **Halbert E. Paine**, for appellee:

The jurisdictional question involved in this case was decided in *McKeever* v. *U. S.* 18 Ct. Cl. 757.

The court of claims has jurisdiction in cases in which the inventions were used with the consent of the owners.

James v. *Campbell*, 104 U. S. 356 (26: 786); *U. S.* v. *Great Falls Mfg. Co.* 112 U. S. 653 (28: 850); *Hollister* v. *Benedict & B. Mfg. Co.* 113 U.S. 67 (28: 904); *Langford* v. *U. S.* 101 U. S. 343 (25: 1012); *U. S.* v. *Burns*, 79 U. S. 12 Wall. 252 (20: 390); *Morse Arms Mfg. Co.* v. *U. S.* 16 Ct Cl. 308; *Jackson* v. *Allen*, 120 Mass. 80.

The letters patent constitute *prima facie* evidence of the utility of the invention.

Whitney v. *Mowry*, 4 Fish. 215; *Lehnbeuter* v *Holthans*, 105 U. S. 94 (26: 989).

Mr. Justice **Bradley** delivered the opinion of the court:

This is a case from the court of claims. Its nature and object are fully explained by the following extract from the petition:

"Your petitioner is the inventor, patentee, and owner of the improvements in infantry equipments, for which were granted letters patent Nos. 139731 and 157537, dated, respectively, June 10, 1873, and December 8, 1874. A board—consisting of Lieutenant-Colonels W. R. Shafter, A. McD. McCook, and Thomas C. English, Major Alexander Chambers, and Captain M. H. Stacey—was appointed by order of the Secretary of War, June 1, 1874, to meet at Fort Leavenworth, Kansas, July 1, 1874, or as soon thereafter as practicable, to consider and report upon the subject of a proper equipment for the infantry soldier, and to recommend the adoption of an equipment best suited to troops serving as infantry. Said board met at Fort Leavenworth, Kansas, July 1, 1874. On the 8th and 9th of July, 1874, the claimant exhibited and explained his said improvements to said board. On the 22d, 24th, and 31st of August, and 16th, 18th and 30th of September, 1874, said board examined, considered, and experimented with said improvements, and on the 12th of November, 1874, decided to recommend the same for adoption to the War Department. On the 24th of November, 1874, said board, in their report to the Chief of Ordinance, recommended the adoption of said improvements by the Government for the use of the Army of the United States. On the 26th [263] of December, 1874, the General of the Army recommended the adoption of the same to the Secretary of War. And on the 4th day of January, 1875, said improvements were adopted by the Secretary of War as a part of the equipment of the infantry soldiers of the United States.

"Since January 4, 1875, the defendants have manufactured or purchased for the use of the army large numbers of equipments, embracing a part or all of said improvements. The number of infantry equipments so manufactured or purchased is about 13,500; and the defendant, by reason of the premises, became indebted to your petitioner, on an implied contract, in the sum of $10,125, being a fair and reasonable royalty on the number of infantry equipments embodying your petitioner's inventions so manufactured and used, of seventy-five cents each. The cost of manufacturing said equipments is $5.59 each."

In its findings of fact the court of claims sustained the averments of the petition, except as to the extent to which the claimant's improvements were used in the army and the value of such use. As to the circumstances under and in pursuance of which those improvements were adopted, and on which the claimant founds the implied contract set up by him, the court in its second finding sets out in full the report of the board of officers, made on the 24th of November, 1874, and referred to in the petition, in which are described the various equipments examined by them, and the reasons are stated why they preferred and recommended the adoption of the claimant's. The court then sets out the recommendation of the General of

the Army, in which he says: "The officers composing this board have had a large and wide experience, and their conclusions are entitled to weight . . . The braces, knapsack, haversack and cartridge box are all approved, and recommended for adoption." The order of the Secretary of War, directed to the Chief of Ordnance, is added, which simply declares that "The report of the board is approved as suggested by the General of the Army, with modifications recommended by him."

264] The court then finds as follows:

"III. The pattern thus adopted involves the use of the claimant's invention, as set forth in claims 4 and 5 of letters patent in 139,731 and claims 1, 2, 3, and 4 of letters patent No. 157,537.

"IV. This equipment was experimental, and had never been put to the test of actual use. It failed to give satisfaction to the army, and has been superseded by a return to the system in vogue during the war of the rebellion and anterior thereto. But this has been done informally, the order adopting the claimant's device never having been revoked, nor any other pattern adopted.

"V. No express agreement was made between the claimant and defendants' officers respecting a price to be paid for a license to manufacture infantry equipments or carrying-braces under the patents. Nor was there any agreement or understanding that the Government's manufacture and user should be regarded as experimental until the device should be tested by general use in the army. The license under which the Government manufactured and used the claimant's device, and the terms thereof, must be implied exclusively from the facts set forth in Finding II.

"VI. Since the 4th day of January, 1875, the Ordnance Department has manufactured 10,500 complete sets of infantry equipments of the pattern of 1874, and 2,400 carrying-braces, in accordance with the specifications of the patents, but has issued for use in the army only 9,027 complete sets of equipments.

"VII. The cost to the Government of manufacturing such equipments was $5.59 per set, and a reasonable royalty for the right to manufacture and use amid the circumstances of the case as hereinbefore described would be the sum of 25 cents per set, amounting on the above quantity of 9,027 sets to the sum of $2,256.75."

Judgment was given in favor of the claimant for this sum.

The principal objections raised on the part of the Government against the judgment are, to the jurisdiction of the court and the form of the action. It is assumed that the ground of complaint on which the petition is founded is a tort and not a contract; that the assertion in the petition of an implied contract is not warranted by the facts of the case; and that the Government cannot be sued in the court of claims for a mere tort.

This assumption of the appellant is erroneous. No tort was committed or claimed to have been committed. The Government used the claimant's improvements with his consent; and, certainly, with the expectation on his part of receiving a reasonable compensation for the license. This is not a claim for an infringement, but a claim of compensation for an authorized use—two things totally distinct in the law, as distinct as trespass on lands is from use and occupation under a lease. The first sentence in the original opinion of the court below strikes the key note of the argument on this point. It is as follows: "The claimant in this case invited the Government to adopt his patented infantry equipments, and the Government did so. It is conceded on both sides that there was no infringement of the claimant's patent, and that whatever the Government did was done with the consent of the patentee and under his implied license." We think that an implied contract for compensation fairly arose under the license to use, and the actual use, little or much, that ensued thereon. The objection, therefore, that this is an action for a tort falls to the ground.

It is objected that an action cannot be brought in the court of claims on a patent, the circuit court having exclusive jurisdiction of this subject. But whilst that objection may be available as to actions for infringement of a patent, in which its validity may be put in issue, and in which the peculiar defenses authorized by the patent laws in Revised Statutes, § 4920, may be set up, it is not valid as against actions founded on contracts for the use of patented inventions. *U. S.* v. *Burns*, 79 U. S. 12 Wall. 246 [20:388]; *Wilson* v. *Sandford*, 51 U. S. 10 How. 99 [13:344]; *Hartell* v. *Tilghman*, 99 U. S. 547 [25:357]; *Allright* v. *Teas*, 106 U. S. 613 [27:296]; *Dale Tile Mfg. Co.* v. *Hyatt*, 125 U. S. 46 [31:683]. The case of *United States* v. *Burns* was an appeal from a decree of the court of claims in favor of Burns for one half of the license fee agreed upon for the use, by the Government, of Major Sibley's patent tent, one half of the patent having been assigned to Major Burns. Sibley joined the Confederates; Burns remained true to his allegiance, and the Quarter-Master-General directed that he should be paid his half of the royalty. This payment being afterwards suspended, Burns filed a petition in the court of claims for the recovery of the amount due him. The court sustained the claim, although in a previous case, in which one Pitcher claimed damages against the Government for the infringement of a patent, it had rejected the claim. In the case of Burns, that court said: [270]

"It was also contended, on behalf of the United States, that this court had no jurisdiction of this case, because we cannot entertain a suit for the infringement of a patent; and *Pitcher's Case* (1 Ct. Cl. 7) was referred to. But this suit is not brought for the infringement of a patent, nor for the unauthorized use of a patented invention, but upon a special contract with a patentee, whereby the use of the invention by the United States was authorized and agreed to be paid for. *Pitcher's Case*, therefore, is not like this. In *Pitcher's Case* there was nothing but an unauthorized use by an officer of the United States; and where an officer of the United States, without authority from them, uses in their service a patented invention, the act being unlawful is his and not theirs, and he and not they are responsible for it." *Burns' Case*, 4 Ct. Cl. 113. The point of

jurisdiction does not seem to have been taken in this court; but the jurisdiction of the court of claims was assumed.

It was at one time somewhat doubted whether the Government might not be entitled to the use and benefit of every patented invention, by analogy to the English law which reserves this right to the Crown. But that notion no longer exists. It was ignored in the case of Burns. The subject was afterwards adverted to in *James v. Campbell*, 104 U. S. 356 [26:786], and the following observations in the opinion of the court in that case are so pertinent to the one in hand, that we deem it proper to reproduce them. We there said:

[271] "That the Government of the United States, when it grants letters patent for a new invention or discovery in the arts, confers upon the patentee an exclusive property in the patented invention which cannot be appropriated or used by the Government itself, without just compensation, any more than it can appropriate or use without compensation land which has been patented to a private purchaser, we have no doubt. The Constitution gives to Congress power 'to promote the progress of science and useful arts by securing for limited times to authors and inventors the exclusive right to their respective writings and discoveries,' which could not be effected if the Government had a reserved right to publish such writings or to use such inventions without the consent of the owner. Many inventions relate to subjects which can only be properly used by the Government, such as explosive shells, rams and submarine batteries to be attached to armed vessels. If it could use such inventions without compensation, the inventors could get no return at all for their discoveries and experiments.

"It has been the general practice, when inventions have been made which are desirable for government use, either for the Government to purchase them from the inventors, and use them as secrets of the proper department; or, if a patent is granted, to pay the patentee a fair compensation for their use. The United States has no such prerogative as that which is claimed by the Sovereigns of England, by which it can reserve to itself, either expressly or by implication, a superior dominion and use in that which it grants by letters patent to those who entitle themselves to such grants. The Government of the United States, as well as the citizen, is subject to the Constitution; and when it grants a patent the grantee is entitled to it as a matter of right, and does not receive it, as was originally supposed to be the case in England, as a matter of grace and favor.

"But the mode of obtaining compensation from the United States for the use of an invention, where such use has not been by the consent of the patentee, has never been specifically provided for by any statute. The most proper forum for such a claim is the court of claims,
[272] if that court has the requisite jurisdiction. As its jurisdiction does not extend to torts, there might be some difficulty, as the law now stands, in prosecuting in that court a claim for the unauthorized use of a patented invention; although where the tort is waived and the claim is placed upon the footing of an implied contract, we understand that the court has in several recent instances entertained the jurisdiction. It is true it overruled such a claim on the original patent in this case, presented in 1867; but according to more recent holdings, it would properly now take cognizance of the case. The question of its jurisdiction has never been presented for the consideration of this court, and it would be premature for us to determine it now. If the jurisdiction of the court of claims should not be finally sustained, the only remedy against the United States, until Congress enlarges the jurisdiction of that court, would be to apply to Congress itself."

We have quoted these observations because, so far as they express an opinion on the subject, either of the right or the remedy, they are in general accord with our present views. And we add now that, in our judgment, the court of claims has jurisdiction to entertain claims and demands of the character presented in the present suit. Whether a patentee may waive an infringement of his patent by the Government, and sue upon an implied contract, is a question on which we do not express an opinion.

As to the questions relating to the character and amount of use which the Government had of the claimant's invention, and of the proper compensation due therefor, we do not see anything in the findings of the court below, or in its conclusions deduced therefrom, to call for serious observation. What evidence the court may have had on these points is not disclosed by the record, and should not be, and the facts found are sufficient to sustain the judgment.

Judgment affirmed.

MARTHA BRODNAX AND EPHRAIM TWEEDY, Trustee, *Appts.*, [236]
v.
THE ÆTNA INSURANCE COMPANY.

(See S. C. Reporter's ed. 236-244.)

Wife's power to pledge her property for husband's debts—Georgia Code—effect of.

1. If an instrument settling property upon a married woman provides that she may pledge it for her husband's debts, there is nothing in the Georgia Statute to prevent her from so doing.

2. The Code of Georgia, which provides that a wife cannot bind her separate estate by any assumption of the debts of her husband, cannot be extended to destroy a power expressly bestowed, and render property inalienable which the donor granted upon condition that it might be conveyed as specified.

3. Where one conveyed property to a trustee for the use and benefit of his wife free from the debts of her husband except such incumbrances as, by the witten directions of himself and her, may be made thereon, such Code does not invalidate a mortgage executed by the trustee, by the written direction of her and her husband.

[No. 61.]

Argued Nov. 1, 1888. Decided Nov. 19, 1888.

APPEAL from a decree of the Circuit Court of the United States for the Southern District of Georgia, for the foreclosure of two mortgages. *Affirmed.*

Statement by *Mr. Chief Justice* **Fuller:**

This is an appeal from a decree for the foreclosure of two mortgages.

The facts are briefly these: June 11, 1866, Benjamin H. Brodnax, being the owner of certain real estate situated in Richmond County, Georgia, executed and delivered to his father, William E. Brodnax, a deed thereof in due form, in consideration of his affection for his wife, Martha Brodnax; and his duty to suitably provide "further sustenance and support," in trust to hold the same for the use and benefit of said Martha during her life, "free from the debts, contracts, and liabilities of her present or any future husband (except such incumbrances or liens as by the written directions of myself [himself] and the said Martha may be made thereon);" upon her death to be reconveyed to said Benjamin, if he survived her, but if not, then to such person as she might appoint, and, in case of her failure to appoint, to his heirs. Upon the written request of said Martha and Benjamin the trustee might sell and convey, [237] the proceeds to be reinvested in property to be held upon the same trusts, the purchaser not to be held responsible for the application of the purchase money.

The trustee was also authorized, whenever Brodnax and his wife should by written request so direct, to execute mortgages, liens, or other incumbrances upon the property for such sum or sums as they should in writing express, the mortgagees not to be responsible for the proper application of the mortgage money, or "hindered in any manner from enforcing the lien or liens of said mortgages."

In case of the death of William E. Brodnax, the trustee, or of his disability or unwillingness to execute the powers and duties of the trust, the grantor and his wife were given power to appoint a successor.

On June 14, 1866, three days after the date of the deed, the trustee, in pursuance of the written request of the grantor and wife, executed a mortgage of the premises to the treasurer of the Soldiers' Loan and Building Association, to secure a loan of $2,000. This mortgage was accompanied by a release signed by Mrs. Brodnax, acknowledging the receipt of five dollars and the advance of two thousand dollars to her husband and herself, and in consideration thereof releasing all right "to dower and twelve months' support in, to, and from the above mortgaged premises, the above deed of mortgage having first been read over and explained to me."

May 11, 1867, the trustee, in pursuance of the written direction of Mr. and Mrs. Brodnax, provided for in the deed, executed another mortgage to the Ætna Insurance Company for $3,193.20, evidenced by a note for that sum to said company, signed by the trustee.

W. A. Brodnax, the trustee, resigned the trust, January 2, 1868, and said Benjamin H. and his wife appointed, in writing, Ephraim Tweedy as successor in trust, who accepted the appointment and trust January 3.

The first mortgage to the Soldiers' Loan Association was assigned to the Ætna Insurance Company, December 4, 1868.

February 14, 1869, Mrs. Brodnax obtained a decree of divorce *a vinculo* from said Benjamin H., and as alimony all his right, title and interest in said mortgaged property.

[238] The Ætna Insurance Company filed its bill to foreclose, November 18, 1878, against Martha Brodnax, to which Tweedy, the trustee, was subsequently made a party, and which alleged that Brodnax left the jurisdiction in 1869 and complainant did not know where he was. In her answer, Mrs. Brodnax denied that she received any of the money the mortgages were given to secure; denied that Brodnax received the $3,193.20, and said that was a sum alleged to be due the company for money collected by Brodnax, as its agent, and converted to his own use; and averred that when she gave the written direction to the trustee to execute the second mortgage, it was under the pressure of threats by the company to prosecute her then husband criminally, and that the consideration of said mortgage was forbearance to prosecute, and that on those grounds the instrument was void. And she further insisted that both of said mortgages were attempts to bind her separate estate for her husband's debts, and therefore illegal.

The evidence tended to show that Mrs. Brodnax did not receive the money secured by either of the mortgages; that the note held by the Ætna was given for a balance due from Brodnax for premiums collected by him as agent and not paid over; that Mrs. Brodnax's brother, and perhaps her mother, told her that threats of criminal prosecution had been made, but that the Ætna not only did not know of such statements, but had never made threats of the kind to Brodnax or any one else, nor meditated, so far as appears, such prosecution; that Mrs. Brodnax was advised, as to the mortgage to the Ætna, that her direction to the trustee to execute it must be voluntary; that she took time to consider, and was then perfectly willing to sign such direction; that she made no complaint of this character until by her answer filed in May, 1879; and that she paid several hundred dollars to the Ætna on account from 1874 to 1877 inclusive. It also appeared that the Ætna purchased and paid for the first mortgage, to protect its own, in December, 1868.

Mr. **W. W. Montgomery**, for appellants:

The wife cannot bind her separate estate by any contract of suretyship, nor by any assumption of the debts of her husband.

Sutton v. *Aiken*, 62 Ga. 740; *Klink* v. *Boland*, 72 Ga. 486; *Capital Bank* v *Rutherford*, 70 Ga. 57; *Campbell* v. *Murray*, 62 Ga. 86.

Money of the wife used by the husband to pay his debt to a creditor, knowing it was the wife's money, can be recovered by the wife.

Chappell v. *Boyd*, 61 Ga. 662; *Maddox* v. *Oxford*, 70 Ga. 179.

Dower is superior to all other liens.

55 Ga. 613.

Permanent alimony in Georgia is, like dower, a support for the wife during life.

Odom v. *Odom*, 36 Ga. 286.

Mrs. Brodnax is not estopped by payments upon the mortgages in ignorance of her legal rights.

Cammack v. *Lewis*, 82 U. S. 15 Wall, 643 (21:244); *Davis* v. *Bagley*, 40 Ga. 181; *Chappell* v. *Boyd*, 61 Ga. 662.

Mr. **Jos. Ganahl**, for appellee:

That a party may not claim and disclaim under the same instrument applies to all writings. To contracts, Bigelow on Estoppel, 574; to deeds, *Gibson* v. *Lyon*, 115 U. S. 439 (29:440);

to wills, *Scholey* v. *Rew*, 90 U. S. 23 Wall. 331 (23: 99); and to trusts, Bigelow, 574, citing *Pickett* v. *Merchants Nat. Bank*, 32 Ark. 346; *Frierson* v. *Branch*, 30 Ark. 453.

To constitute duress by threats of prosecution, the prosecution must be groundless.

Boone, Mort. § 82, citing 18 Ohio, 548, 14 Ohio, 38, 1 Jones, Mort. § 626.

It is not duress for a person to insist on his legal rights or to threaten a lawful prosecution.

8 Wait, Act. & Def. 519, citing 86 N. Y. 472; 30 Hun, 237; 36 Hun, 112.

A threat of lawful arrest of a husband does not constitute duress of the wife.

8 Wait, Act. & Def. 520, citing 96 Ill. 301; 15 Neb. 647.

[240] *Mr. Chief Justice* **Fuller** delivered the opinion of the court.

If Mrs. Brodnax had the power under the deed of June 11, 1866, to direct the execution of the mortgages to secure her husband's debts, then the decree must be affirmed.

The objections of counsel to the maintenance of the decree, other than upon the question of power, do not appear to us to require serious consideration.

As the evidence stands, no case of duress which could be availed of was made out in respect to the mortgage to the insurance company, nor is there any ground for the contention that the company took the note in compounding a felony.

There was no issue in the case as to whether Brodnax was living or not, and questions as to dower and the statutory support for a decedent's widow did not arise. No evidence was adduced to establish the death of Brodnax, and the averment of the bill in reference to his absence was made *diverso intuitu*, and not with the view of setting up his death by way of presumption, and seeking relief predicated thereon. Nor could the decree awarding alimony in 1869 operate to defeat a decree of foreclosure upon valid mortgages competently executed, or directed to be executed, by her in 1866 and 1867.

The real inquiry is whether, under the laws of Georgia, Mrs. Brodnax could pledge the estate granted, for her husband's debts.

The rule in Georgia prior to the adoption of the Code, as to the power of a married woman to dispose of her separate estate, is thus stated in *Dallas* v. *Heard*, 32 Ga. 604: "Whenever property is secured to a *feme covert* to her sole and separate use, without qualification, limitations or restrictions as to its use and enjoyment she is to be regarded in respect to such estate, in all respects, as a *feme sole;* and it is chargeable and bound for the payment of all debts contracted by her that may be secured by prom-
[241] issory note, or other undertaking in writing, to pay the same, whether said note is given by her alone, or jointly with others; she being the sole and exclusive owner of the property, she holds it with all the incidents of property—the right of selling, giving, or charging it with the payment of debts."

In *Clark* v. *Valentino*, 41 Ga. 147, the court, approving of the language just quoted, says by Brown, *C. J.:* "But it is insisted that this court has laid down a different rule as to the ability of the wife to bind her separate estate for the payment of the debts of her husband, in *Kempton* v. *Hallowell*, 24 Ga. 52; *Hicks* v. *Johnston*, Id. 194; and in *Meaton* v. *Scott*, 25 Ga. 652. I think not. In all these cases the property was given and secured to the wife by deed or will, and it was expressly provided in the instrument that it should in no case be subject to the debts of the husband; and the court held that her power of alienation was restricted by the donor in the instrument by which she acquired it; and that she could not on that account bind it for the payment of her husband's debt, that being the very thing to which the restriction related. This amounts, however, only to an exception to the general rule, and is not the rule itself. The rule is that the *feme covert* is a *feme sole* as to her separate estate, with full power of alienation or disposition at her pleasure. The exception is that if the donor has restricted the power of alienation or disposition, she is bound by such restriction, and cannot, directly or indirectly, alienate or bind it, in violation of the restriction placed upon it by the donor."

The designation of a particular mode in the gift or settlement might preclude the adoption of any other (*Wylly* v. *Collins*, 9 Ga. 223; *Weeks* v. *Sego*, Id. 201); but unless restrained or fettered by the instrument in which her estate originated, she had the absolute power of disposition. *Fears* v. *Brooks*, 12 Ga. 195. Of course she could make such disposition for such object and in such way as was expressly authorized.

The Code was adopted in 1863, and section 1773 of the edition of 1867, section 1783 of the edition of 1882, provides as follows: "The wife [242] is a *feme sole* as to her separate estate, unless controlled by the settlement. Every restriction upon her power in it must be complied with; but while the wife may contract, she cannot bind her separate estate by any contract of suretyship, nor by any assumption of the debts of her husband, and any sale of her separate estate, made to a creditor of her husband in extinguishment of his debts, shall be absolutely void." While before this enactment a married woman could bind her separate estate for her husband's debts if she held the same free from restriction, the statute rendered that no longer possible, by imposing a restriction where none existed. But if an instrument settling property upon a married woman provides that she may pledge it for her husband's debts, there is nothing in the statute to prevent her from so doing.

It is not wrong in itself for a wife, of her own free will, to devote her separate property to the relief of her husband. Obedience to the dictates of duty, or even yielding to the impulses of affection, has in itself no tendency to impair the happiness of the family but the contrary.

As remarked in *Sutton* v. *Aiken*, 62 Ga. 741, "It is evident that it is not wicked or immoral for a wife to pay her husband's debts, nor has the general public an interest in her abstaining from so doing. The restraint imposed upon her by the law is solely for her benefit and well being. The rule is economical, not moral; and its policy is in favor of a class, and not of the

public at large. True, the class is a numerous and important one, but married women cannot be said to constitute the public. The public justice, police, order, safety, revenue, health, religion or morality is not involved in preventing wives from devoting their property to the payment of their husbands' debts."

Hence, while the State has seen fit to impose a restriction where the instrument of gift is silent, or the wife otherwise holds by an unqualified ownership, it does not follow that the statute can be extended, upon grounds of general public policy, to destroy a power expressly bestowed, and render property inalienable which the donor granted upon condition that it might be conveyed as specified. It is not to [243] be assumed that the State intended to discourage gifts to or settlements upon married women, by making it impossible for those who wish to give to effectuate their intentions in respect to the terms on which the property should be held and disposed of.

The wife is "controlled by the settlement," not only as to compliance with "every restriction upon her power," but also as to every provision therein which enables her to act as prescribed, notwithstanding, except for such provision, she could not, under the statute, do that, which as a *feme sole* she might do. The wife cannot bind her separate estate "by any assumption of the debts of her husband," but the separate estate which she cannot thus bind is estate so settled to her sole and separate use as to be controlled without the concurrence of her husband; and where, by the terms of the instrument, his concurrence is essential to whatever is done, it is not so situated as to come within the intent and meaning of the statute.

The property in question belonged to Brodnax. He conveyed it to a trustee by an instrument which required his assent to any sale or mortgage, and provided that the property should be held free from his debts, contracts, and liabilities, except such incumbrances or liens as might be made thereon at the written direction of himself and his wife. Under such circumstances the statute cannot be availed of to invalidate these mortgages; and this disposes of the case, for the mortgages were, in our judgment, such incumbrances as Mrs. Brodnax had the power to direct jointly with her husband to be created.

The meaning of the clause of the deed bearing on this subject is that while the property was to be free from the contracts, debts and liabilities of the husband, it might be specially subjected to incumbrance to secure some of his debts, upon the written agreement of both husband and wife to that effect. This exception cannot be rejected as inconsistent with the previous provision, for it does not go to destroy it. In the particular instances in which she might choose to join with Brodnax in doing what he had not reserved the legal right to demand, debts might be made a charge upon the [244] property which was otherwise to be held free from all his debts. And in this view it does not matter whether the debt secured was past due or not.

The decree of the Circuit Court will therefore be affirmed.

THE CREDIT COMPANY, Limited, *Appt.*, [258]
v.
THE ARKANSAS CENTRAL RAILWAY COMPANY ET AL.

(See S. C. Reporter's ed., 258-261.)

Appeal, when inoperative—effect of filing—rule —order nunc pro tunc.

1. Where an appeal is prayed for and allowed but never prosecuted, no bond being given, no citation issued and no return of the record being made to this court at the ensuing term, the appeal ceases to have any operation or effect.

2. Where an appeal was allowed by a justice of this court on the last day on which an appeal could be taken, but was not presented to the court below nor filed with the clerk until five days after said time had expired, such appeal is ineffectual.

3. The same rule is applicable to appeals as to writs of error in regard to the time within which an appeal may be brought, and in regard to its filing.

4. The actual time of presenting and filing an appeal cannot be anticipated by entering an order *nunc pro tunc*. When the time for taking an appeal has expired, it cannot be arrested or called back by a simple order of the court.

[No. 69.]

Argued Nov. 5, 1888. Decided Nov. 19, 1888.

APPEAL from a decree of the Circuit Court of the United States for the Eastern District of Arkansas, dismissing a bill to set aside a sale of a railroad on a mortgage foreclosure. *Dismissed.*

The facts are stated in the opinion.

Messrs. **Geo. W. Caruth,** *J. B. Henderson,* **Matt. G. Reynolds** and *James M. Lewis,* for appellant:

If an appeal is taken before the end of the term at which the decree is rendered, no formal citation is necessary.

Brown v. *McConnell,* 124 U. S. 491 (31: 496).

The complainant could have filed the bond in this court even after a motion to dismiss.

O'Reilly v. *Edrington,* 96 U. S. 724 (24: 659); *Draper* v. *Davis,* 102 U. S. 370 (26: 121); *Brown* v. *McConnell,* 124 U. S. 489 (31: 495).

The appeal taken in open court, if docketed here in time, gives this court jurisdiction.

Hewitt v. *Filbert,* 116 U. S. 142 (29: 581).

The appeal was taken in time.

Sage v. *Central R. Co.* 96 U. S. 712 (24: 641); *Draper* v. *Davis,* 102 U. S. 370 (26: 121); *Brandies* v. *Cochrane,* 105 U. S. 262 (26: 989).

Mr. **John J. Hornor,** for appellees:

A writ of error is not brought, within the legal meaning of the term, until it is filed in the court which rendered the judgment.

Brooks v. *Norris,* 52 U. S. 11 How. 207 (13: 666).

The service of a writ of error is the lodging of a copy of same in the clerk's office where the record remains.

U. S. v. *Dashiel,* 70 U. S. 3 Wall. 701 (18: 270); *Mussina* v. *Cavazos,* 73 U. S. 6 Wall. 360 (18: 812).

The same rule must apply to the taking of appeals.

The San Pedro, 15 U. S. 2 Wheat. 132 (4: 202).

The failure to sue out the writ of error within two years is jurisdictional.

Scarborough v. *Pargoud,* 108 U. S. 567 (27: 824).

Mr. Justice **Bradley** delivered the opinion of the court:

This was a bill filed by the appellants on the 15th day of April, 1882, to set aside a sale of the Arkansas Central Railroad, made by the master in chancery on July 26, 1877, under a decree rendered in the District Court of the [259] United States for the Eastern District of Arkansas, at Helena, on the 17th day of March, 1877, at the suit of the Union Trust Company of New York against the Railroad Company, foreclosing a mortgage executed to secure certain bonded indebtedness.

On January 22, 1883, a final decree was entered dismissing the bill for want of equity. On the same day, to wit: January 22, 1883, an appeal to this court was prayed for and allowed; but it was never prosecuted, no bond being given, no citation issued, and no return of the record being made to this court at the ensuing term. That appeal, therefore, ceased to have any operation or effect, and cannot avail the appellants. *Brooks* v. *Norris*, 52 U. S. 11 How. 207 [13: 666]; *Steamer Virginia* v. *West*, 60 U. S. 19 How. 182 [15: 594]; *Castro* v. *U. S.* 70 U. S. 3 Wall. 46 [18: 163]; *Mussina* v. *Cavazos*, 78 U. S. 6 Wall. 355 [18: 810]; *Grigsby* v. *Purcell*, 99 U. S. 505 [25: 354]; *The Tornado*, 109 U. S. 110 [27: 874]; *State* v. *Demarest*, 110 U. S. 400 [28: 191]; *Killian* v. *Clark*, 111 U. S. 784 [28: 599].

On the 22d day of January, 1885, exactly two years after the entry of the decree, a petition for an appeal was presented by the solicitor of the complainant to *Mr. Justice* Miller and allowed by him. At the same time *Justice* Miller signed a citation to the defendants to appear in the Supreme Court of the United States, at the then next term thereof, to answer the appeal. A bond for costs in the sum of one thousand dollars was also at the same time presented to and approved by the same Justice. These papers were not presented to the circuit court nor filed with the clerk thereof until the 27th day of January, 1885. On that day the following order was made and entered in the case, to wit: "Comes N. & J. Erb and pray the court to enter an order granting to the plaintiff an appeal in this cause to the Supreme Court of the United States, which motion is denied, such appeal having heretofore been granted. It is ordered by the court that this entry bear date as of January 22, 1885.

"And on the same day the following order was entered in this cause:

"Comes N. & J. Erb, attorneys for said plaintiff, and file here in court a prayer for appeal to the Supreme Court of the United States, and the allowance of said appeal by *Mr.* [260] *Justice* Miller on the 22d day of January, 1885; also a citation signed by *Mr. Justice* Miller, and bond for costs approved by said Justice. Which prayer for appeal to the Supreme Court of the United States, and the allowance of said appeal by said Justice, is as follows:" [then copying the petition for appeal, the allowance, citation and bond; which papers were endorsed "*Filed Jan.* 27, 1885. *Ralph L. Goodrich, Clerk.*"]

This is all that is shown by the record in regard to the taking of the appeal, from which it appears that the appeal was allowed by *Justice* Miller on the last day on which an appeal could be taken, but was not presented to the court below nor filed with the clerk until five days after said time had expired.

The language of the statute is that "No judgment, decree or order of a circuit or district court, in any civil action at law or in equity, shall be reviewed in the supreme court on writ of error or appeal unless the writ of error is brought or the appeal is taken within two years after the entry of such judgment, decree or order." R. S. U. S. § 1008. It was decided in *Brooks* v. *Norris*, 52 U. S. 11 How. 204 [13: 665], that "The writ of error is not *brought*, in the legal meaning of the term, until it is filed in the court which rendered the judgment." And *Chief Justice* Taney, speaking for the court, said: "It is the filing of the writ that removes the record from the inferior to the appellate court, and the period of limitation prescribed by the Act of Congress must be calculated accordingly. The day on which the writ may have been issued by the clerk, or the day on which it is tested, are not material in deciding the question." This decision has always been adhered to. See *Mussina* v. *Cavazos*, 78 U. S. 6 Wall. 355 [18: 810]; *Scarborough* v. *Pargoud*, 108 U. S. 567 [27: 824]; *Polleys* v. *Black River Improvement Co.* 113 U. S. 81 [28: 939].

The same rule is applicable to appeals as to writs of error. Section 1012 of the Revised Statutes declares that "Appeals from the circuit courts and district courts acting as circuit courts, and from district courts in prize causes, shall be subject to the same rules, regulations, and restrictions as are or may be prescribed in law in cases of error." This provision applies to the time within which appeals may be brought, as well as to other regulations con- [261] cerning them. *The San Pedro*, 15 U. S. 2 Wheat. 132 [4: 202]; *Villabolos* v. *U. S.* 47 U. S. 6 How. 81 [12: 352]; *Brandies* v. *Cochrane*, 105 U. S. 262 [26: 989]. An appeal cannot be said to be "taken" any more than a writ of error can be said to be "brought" until it is, in some way, presented to the court which made the decree appealed from, thereby putting an end to its jurisdiction over the cause, and making it its duty to send it to the appellate court. This is done by filing the papers, viz., the petition and allowance of appeal where there is such a petition and allowance), the appeal bond and the citation. In *Brandies* v. *Cochrane* it was held that, in the absence of a petition and allowance, the filing of the appeal bond, duly approved by a justice of this court, was sufficient evidence of the allowance of an appeal, and was a compliance with the law requiring the appeal to be filed in the clerk's office.

Of course, if the appeal is allowed in open court and entered in the minutes, no further service is required. But, as we have seen, even such a mode of taking an appeal (called in the civil and canon laws an appeal *apud acta*) will not avail unless the appeal is duly prosecuted.

The attempt made in this case to anticipate the actual time of presenting and filing the appeal, by entering an order *nunc pro tunc*, does not help the case. When the time for taking an appeal has expired it cannot be arrested or called back by a simple order of

court. If it could be, the law which limits the time within which an appeal can be taken would be a dead letter.

The appeal must be dismissed, and each party pay its own costs.

---

[315] UNITED STATES, *Appt.*,

v.

THE AMERICAN BELL TELEPHONE COMPANY.

(See S. C. Reporter's ed. 315-373.)

Multifariousness—suit to annul patent—sufficiency of the allegations—as to fraud—suit brought by United States—jurisdiction of circuit court—power of courts of equity—the proper relief.

1. A bill is not multifarious which assails two patents, issued to the same party and which relate to the same subject and both of which are held by the same defendant, the latter patent being for an improvement upon the invention of the earlier one.
2. If a person was aware, when he filed his specifications, asserted his claim and procured his patents, that the same matter for which the patents were issued had been previously discovered and put into operation by other persons, he was guilty of such a fraud upon the public that the monopoly which such patents grant to him ought to be revoked and annulled.
3. It is not necessary, in stating the facts which constitute a fraud, where relief is sought in a bill in equity, that all the evidence which may be adduced to prove that fraud should be recited in the bill.
4. It is sufficient if, in such bill, the main facts or incidents which constitute the fraud be fairly stated, so as to put the defendant upon his guard and apprise him of what answer may be required of him.
5. A bill which charges that the patentee knew he was not the first inventor, and that his efforts to procure the patent were fraudulent, because he was aware that he was obtaining a patent to which he was not in law or in equity entitled, sufficiently alleges the fraud in procuring the patent.
6. Such a bill is sufficient, on demurrer, if, taken as true, there is enough in it to establish the fraud in the procurement of the patent and to justify its cancellation or rescission if the court has jurisdiction to do so.
7. The Circuit Courts of the United States have jurisdiction in suits brought by the United States to set aside and cancel patents for inventions—for frauds committed by the parties to whom they were issued.
8. Courts of equity have the right to annul and set aside contracts or instruments obtained by fraud, to correct mistakes made in them and to require their cancellation.
9. The only authority competent to set a patent aside or to annul it, is vested in the judicial department of the Government; and this can only be effected by proper proceedings taken in the Courts of the United States.
10. Congress did not intend, by giving to private individuals the right to set up by way of defense to an action for infringement of a patent that the patentee had surreptitiously obtained the patent, or that he was not the first inventor, etc., to supersede the affirmative relief to which the United States is entitled to obtain a cancellation of a patent obtained from it by fraud.

[No. 846.]

Argued Oct. 9, 10, 1888. Decided Nov. 12, 1888.

APPEAL from a decree of the Circuit Court of the United States for the District of Massachusetts, sustaining a demurrer and dismissing a suit in equity to declare void and recall two patents for inventions. *Reversed.*

Reported below, 32 Fed. Rep. 591.

The facts are stated in the opinion.

Messrs. **A. G. Thurman, Jefferson Chandler,** *Special Assistant U. S. Atty.*, **G. A. Jenks,** *Solicitor Gen.*, *Eppa Hunton, Special Assistant U. S. Atty.*, and *Chas. S. Whitman, Special U. S. Atty.*, for appellant.

Points and authorities from the brief of *Messrs.* **Eppa Hunton** and **Jefferson Chandler,** *Special Assistant United States Attorneys*, for appellant:

The Government may sue to cancel a patent for land.

U. S. v. *San Jacinto Tin Co.* 125 U. S. 285 (31:752).

The grant of a patent for an invention is the grant of property, no less pecuniarily valuable to the patentee than the grant of a patent for land.

Gayler v. *Wilder*, 51 U. S. 10 How. 494 (13:511); *Brown* v. *Duchesne*, 60 U. S. 19 How. 195 (16:599).

The grant of a patent for an invention resembles a contract between the United States and the inventor.

Atty-Gen. v. *Rumford Chemical Works*, 9 Pat. Off. Gaz. 1062; *McKeever* v. *U. S.* 14 Ct. Cl. 396; *Butcher's Union Slaughter-House Co.* v. *Crescent City Co.* 111 U. S. 762 (28:588); *U. S.* v. *Gunning*, 18 Fed. Rep. 511; *Mowry* v. *Whitney*, 81 U. S. 14 Wall. 434 (20:858).

The Government acts for the public, in suing to repeal a patent fraudulently procured.

What contracts with the government are void.

Smelting Co. v. *Kemp*, 104 U. S. 636 (26:875).

If government officers have acted on erroneous interpretations of their powers, they have acted without jurisdiction, and their action is void:

Grant v. *Raymond*, 31 U. S. 6 Pet. 218 (8:376); *Windsor* v. *McVeigh*, 93 U. S. 232 (23:917).

Bill in equity has grown in practice to be a substitute for *scire facias.*

Mowry v. *Whitney*, 81 U. S. 14 Wall. 434 (20:858).

A State may, without express provision, maintain in its corporate name actions to enforce its rights and redress its injuries.

Ind. v. *Woran*, 6 Hill, 38; *People* v. *Assessors of Watertown*, 1 Hill, 620; *Delafield* v. *Ill.* 2 Hill, 162; Angell & Ames, Corp. §§ 369, 370; *U. S.* v. *Bank of the Metropolis*, 40 U. S. 15 Pet. 401 (10:783).

No statute is necessary to authorize the United States to sue in such a case.

The right to sue is independent of statute.

Cotton v. *U. S.* 52 U. S. 11 How. 231 (13:676); *Dugan* v. *U. S.* 16 U. S. 3 Wheat. 181 (4:364); Story, Const. § 1674; Spear, Law of Fed. Judiciary, 101; Cooley, Const. Lim. 15; High, Extra. Legal Rem. §§ 592, 593; Foster, Scire Facias, 12, 228.

That right in the Government in this class of cases has not been repealed.

Tobin v. *Reg.* 14 C. B. N. S. 505; Chitty, Prerogatives of the Crown, 266, 383; *Rex* v. *Copland*, Hughes, 204; Broom, Legal Maxims, 58; Sedgwick, Stat. & Const. Law, 395; *U. S.* v. *Hoar*, 2 Mason, 314.

The fact that Congress has permitted by statute certain defenses to be made to a patent by a private person, when sued in an action for

infringement, cannot be construed to abridge the power or right of the Government to sue.

Foster, Scire Facias, 245, 251, 369.

The Government's remedy to repeal the patent covers ground and reaches results which are not covered and cannot be reached in private litigation.

Foster, Scire Facias, 243; *Arkwright* v. *Mordaunt*, Dav. Pat. Cas. 69; *Arkwright* v. *Nightengale*, Id. 37.

The Government had no power to grant a patent giving an exclusive privilege to Mr. Bell to enjoy the invention of another.

Thomas v. *Waters*, Hardr. 443, 448.

Nor did it have power to make a grant in violation of any law of the land (2 Roll. Abr. 164) or injurious to vested rights.

Rex v. *Butler*, 3 Lev. 220; Walker, Patents, § 178, p. 127.

A court of equity will set aside the patent if the law has not been correctly expounded and applied.

Rex v. *Wilkes*, 4 Burr. 2539; *Yick Wo* v. *Hopkins*, 118 U. S. 369 (30:226); *Dynes* v. *Hoover*, 61 U. S. 20 How. 80 (15:844); 2 Whart. Ev. §§ 794, 796; *Windsor* v. *McVeigh*, 93 U. S. 282 (23:917).

There is nothing in the objection that the action here instituted has not been earlier prosecuted.

Broom, Legal Maxims, 50, and cases there cited; Bacon, Abr. 7th ed. title, *Prerogative*, E. 6; Sedgwick, Stat. & Const. Law, 106.

The objection to the bill, that it does not state the evidence upon which the case is to be made by the Government, is without force.

Story, Eq. Pl. §§ 28, 252; *St. Louis* v. *Knapp Co.* 104 U. S. 658 (26:883).

Recitals preliminary to the statement of the facts upon which the Government asks a judgment setting aside the patents described in the bill cannot be made the subject of a demurrer.

1 Dan. Ch. Pr. 349.

The defendant's demurrer is bad on its face, and must be overruled. It is too general and confused; it is a demurrer to the whole bill, and it is also a demurrer to separate and distinct parts of the bill for and upon like grounds.

Story, Eq. Pl. §§ 442-444; Dan. Ch. Pr. 584; *Brandon Mfg. Co.* v. *Prime*, 14 Blatchf. 371; *Heath* v. *Erie R. Co.* 8 Blatchf. 412; *Livingston* v. *Story*, 34 U. S. 9 Pet. 632 (9:255); *Atwill* v. *Ferrett*, 2 Blatchf. 43; *Devonsher* v. *Newenham*, 2 Sch. & Lef. 199.

In order to procure a judgment of cancellation of the patents, the United States must be plaintiff in an action for that purpose.

Gibson v. *Ingo*, 6 Hare, 112; Mitford, Eq. Pl. 127, 128; Story, Eq. Jur. § 703, note 1.

The bill shows on its face that the Attorney-General authorized suit to be brought.

U. S. v. *Throckmorton*, 98 U. S. 61 (25:93); *Doughty* v. *West*, 6 Blatchf. 433.

The following are the points and authorities from the brief filed by *Mr.* **Jenks**, *Solicitor-Gen.*, for the appellant:

The bill is not multifarious in that it joins allegations and prayers for relief in respect of two patents.

2 Bouv. Law Dict. 261; Story, Eq. Pl. §§ 271, 271 a; Cooper, Eq. Pl. 182; Mitford, Eq. Pl. (by Jeremy) 181; Adams, Eq. 309, 310; *Campbell* v. *Mackay*, 1 Myl. & C. 617; *Atty-Gen.* v. *Cradock*, 3 Myl. & C. 94; *Gaines* v. *Mausseaux*, 1 Woods, 118; *Bedsole* v. *Monroe*, 5 Ired. Eq. 317; *Case* v. *Redfield*, 4 McLean, 527; *Nourse* v. *Allen*, 4 Blatchf. 377; *Gamewell Fire Alarm Teleg. Co.* v. *Chillicothe*, 7 Fed. Rep. 354; *Walsham* v. *Stainton*, 1 DeG. J. & S. 691; *Am. Bell Teleph. Co.* v. *Spencer*, 8 Fed. Rep. 509; *Gaines* v. *Chew*, 43 U. S. 2 How. 642 (11:411); *Seymour* v. *Osborne*, 78 U. S. 11 Wall. 534 (20:35); *Bates* v. *Coe*, 98 U. S. 48 (25:74).

The second general ground of demurrer is equivalent to a denial of any power in any department of the Government to cancel or declare void a patent for an invention issued according to the forms of law. A patent for an invention is a grant.

2 Bouv. Law Dict. 379.

It is a franchise.

3 Kent, Com. 458.

It is defined at common law, to be a branch of the King's prerogative.

2 Bl. Com. 37.

It is property of value.

Gayler v. *Wilder*, 51 U. S. 10 How. 494 (13:511); *Brown* v. *Duchesne*, 60 U. S. 19 How. 195 (15:599).

The only property right the inventor has is created by the grant. The power to make the grant is contained in the Constitution.

Const. art. 1, § 8, cl. 8.

A sovereign has a right to all the remedies to redress wrongs in the courts that a citizen has and, in addition thereto, the rights and privileges that are incident to sovereignty—all of which are held in trust in common for the people. This suit is maintainable on both these grounds.

Pa. v. *Wheeling & B. Bridge Co.* 54 U. S. 13 How. 563 (14:268).

The right of the Government to bring the suit, and the power of the United States Courts to adjudge is sustained by an almost uninterrupted course of judicial decisions in England and in the United States.

4 Coke, Inst. p. 87; 2 Bl. Com. 259, 281; *Atty-Gen.* v. *Vernon*, 1 Vern. 277; *Rex* v. *Butler*, 3 Lev. 220; *Queen* v. *Aires*, 10 Mod. 258, 354; *Lord Proprietary* v. *Jenings*, 1 Har. & McH. 92; *Atty-Gen.* v. *Chicago & N. W. R. Co.* 35 Wis. 425; *Atty-Gen.* v. *Albion Academy*, 52 Wis. 479, 480; *U. S.* v. *Gunning*, 18 Fed. Rep. 511; *Mowry* v. *Whitney*, 81 U. S. 14 Wall. 439 (20:859); *U. S.* v. *Stone*, 69 U. S. 2 Wall. 535 (17:767); *U. S.* v. *Hughes*, 52 U. S. 11 How. 568 (13:816); *Field* v. *Seabury*, 60 U. S. 19 How. 324 (15:651); *Hughes* v. *U. S.* 71 U. S 4 Wall. 236 (18:304); *U. S.* v. *Throckmorton*, 98 U. S. 61 (25:93); *U. S.* v. *Minor*, 114 U. S. 233 (29:110); *Mahn* v. *Harwood*, 112 U. S. 365 (28:669); *Doughty* v. *West*, 6 Blatchf. 433; *Rubber Co.* v. *Goodyear*, 76 U. S. 9 Wall. 797 (19:569); 1 Op. Atty-Gen. 458; 4 Op. Atty-Gen. 120; *Atty-Gen.* v. *Rumford Chemical Works*, 2 Bann. & A. 299; *U. S.* v. *San Jacinto Tin Co.* 125 U. S. 273 (31:747).

The defense of laches does not apply to suits brought by the Government.

U. S. v. *Kirkpatrick*, 22 U. S. 9 Wheat. 735 (6:203); *Dox* v. *Postmaster-General*, 26 U. S. 1 Pet. 324 (7:162); *Gaussen* v. *U. S.* 97 U. S. 590 (24:1009); *U. S.* v. *Minor*, 114 U. S. 233 (29:112).

In the application of principles, equity follows the law.

Story, Eq. Jur. 13th ed. §§ 13, 15, 19.

Points and authorities from the brief of *Mr. Charles S. Whitman*, for appellant:

The right of the Sovereign to recall a franchise when it has been procured by fraud or false suggestion has never been denied.

Perpigna on Patents, Paris, 1832; Germany, Law of July 1, 1877, § 3; Italy, Law of 1864, chap. 2; Russia, Code of Laws, Vol. XI, part 11, § 3, chap. 5; Spain, Law of July 30, 1878, § 8; Austria, Law of August 15, 1852, § 6; Belgium, Law of May 24, 1854, art. 26; Turkey, Law of the 20th day of the month Rabia, 1 A. H. 1297, § 4, chap. 2; Sweden, Law of May, 1884, § 23.

For the state of the law in regard to the repeal of letters patent for inventions as it existed in England at the date of the colonization of this country, see:

Atty-Gen. v. *Vernon*, 1 Vern. 277; *Rex* v. *Butler*, 3 Lev. 220; *The Queen* v. *Aires*, 10 Mod. 354; Holroyd, Patents, published in 1830, cites 4 Inst. 72, 88; 3 Lev. 223; 6 Mod. 229; *Rex* v. *Haine*, 2 Cox, Eq. Cas. 235; Bull. N. P. 75, 76; Dy. 197; 2 Saund. 72; 1 Ves. Jr. 118; *Reg.* v. *Arkwright*, Dav. Pat. Cas. 61; 2 Ventr. 344; 10 Mod. 354. See also Smith, Patents, 30; Hands, Patents, 16; Godson, Patents, 270; Dyer, 276; Coryton, Letters Patent, 164.

The usual proceeding to set aside letters patent in England has been by *scire facias*.

Atty-Gen. v. *Vernon*, 1 Vern. 277, 369.

But it seems that an information in equity will lie at the suit of the Crown to set aside letters patent obtained by fraud.

The Magdalen College Case, 11 Coke, Rep. 75 a.

Grants of exclusive privileges in inventions have always been treated by the courts as standing on the same footing as grants of land.

Morgan v. *Seaward*, Murphy & H. 55; 2 Mees. & W. 544; Drewry, Patents, 4-7.

The law as above set forth was applied in the colonial courts.

Lord Proprietors v. *Gerard*, 1 Harr. & McH. 163, 189; *Mancius* v. *Lawton*, 10 Johns. 24.

Since the organization of the Federal Government the right to annul land patents improperly issued has been repeatedly affirmed by the Executive, Legislative and Judicial Departments of the Goverment.

U. S. v. *Stone*, 69 U. S. 2 Wall. 525 (17: 765).

The judiciary committee of the Forty-Ninth Congress reported that it is unquestioned that the supreme court has decided that the United States had full authority to initiate and conduct suits to cancel and annul patents for land obtained from it by fraud, misrepresentation, or mistake.

Cotton v. *U. S.* 52 U. S. 11 How. 229 (13: 675); *U. S.* v. *Hughes*, 52 U. S. 11 How. 552 (13: 809); *Field* v. *Seabury*, 60 U. S. 19, How. 323 (15: 650); *U. S.* v. *Stone*, 69 U. S. 2 Wall. 525 (17: 765); *U. S.* v. *Minor*, 114 U. S. 223 (29: 110).

Under the Act of 1790 any person, whether a patentee or not might apply for the repeal of a patent.

Stearns v. *Barrett*, 1 Mason, 164; *Delano* v. *Scott*, 1 Gilp. 489; *Ex parte Wood*, 22 U. S. 9 Wheat. 603 (6: 171).

It was held by *Judge* Wallace in *United States* v. *Gunning*, 18 Fed. Rep. 511, that there is no distinction between letters patent for an invention and for land, as regards the rights and remedies for vacating them; and this was affirmed by Wheeler, *J.*, in 22 Fed. Rep. 653, and 23 Fed. Rep. 668.

In England, both by the common law and the Statute of Monopolies, it is, and always has been, the essential requisite in an art or invention which is made the subject of a patent that it shall be new at the time the patent was granted.

Darcy v. *Allein*, 11 Coke, 84; *Clothworkers of Ipswich Case*, Godb. 252; Coke, Third Inst. chap. 85, p. 181; Bacon, Abr. titles, *Monopoly* and *Prerogative*, f. 4; Shep. Abr. part III, 61; Hawk. P. C. part I, chap. 79, § 2; *Shaw* v. *Cooper*, 32 U. S. 7 Pet. 318 (8: 698); Coryton, Patents, 41.

In *Cartwright* v. *Amatt*, 2 Bos. & P. 43, cited in 14 Ves. 131, *Lord* Eldon said that patents were to be construed as bargains between inventors and the public.

Hindmarch, 250; *Neilson* v. *Harford*, Web. Pat. Cas. 341.

The only appeal that can be taken in the interest of the public from the fraudulent or erroneous action of the officers of the Patent Office is that which is being pursued by the Government in this case.

In England, anyone may file a protest against a patent being granted.

Hindmarch, Patents, 515.

The English Courts, in sustaining proceedings to cancel letters patent for inventions, have always treated such actions as on the same footing as those for avoiding a grant of land from the Crown.

Morgan v. *Seaward*, 1 Web. Pat. Cas. 187.

The right to repeal is based on the fact that the patent deprived the citizen of a right or liberty that he had before.

Hindmarch, Patents, 235; Drewry, Patents, 4; *Hughes* v. *U. S.* 71 U. S. 4 Wall. 232 (18: 303).

The case of the Government is stronger in repealing a patent for an invention than in repealing a patent for land.

Providence Rubber Co. v. *Goodyear*, 76 U. S. 9 Wall. 788 (19: 566); *Corning* v. *Burden*, 56 U. S. 15 How. 270 (14: 691).

A bill in chancery will lie to annul a patent obtained by fraud.

U. S. v. *Frazer*, 22 Fed. Rep. 107.

To defeat a patent on the ground of public use, it is only necessary that one specimen of the thing invented should have been publicly used; *Consolidated Fruit Jar Co.* v. *Wright*, 94 U. S. 97 (24: 69); and it is only necessary to prove that one person knew of the use.

Egbert v. *Lippmann*, 104 U. S. 336 (26: 756).

Defenses which may be set up in an infringement suit offer no protection to the public.

Tilghman v. *Proctor*, 102 U. S. 708 (26: 279). Smith, Patents, 30; Perpigna, Patents.

A patent cannot be impeached by a defendant in an infringement suit for fraud or mistake in its issue.

Doughty v. *West*, 6 Blatchf. 429; *Celluloid Mfg. Co.* v. *Goodyear Dental Vulcanite Co*, 13 Blatchf. 275; *Mowry* v. *Whitney*, 81 U. S. 14 Wall. 434

(20: 858); *Foster* v. *Lindsay*, 2 Bann. & Ard. 175; *U. S.* v. *Colgate*, 21 Fed. Rep. 318; *Gear* v. *Grosvenor*, 1 Holmes, 215; *Crompton* v. *Belknap Mills*, 8 Fish. Pat. Cas. 547; *Providence Rubber Co.* v. *Goodyear*, 76 U. S. 9 Wall. 788 (19: 566); *Phila. W. & B. R. Co.* v. *Dubois*, 79 U. S. 12 Wall. 47 (20: 265); *Seymour* v. *Osborne*, 78 U. S. 11 Wall. 516 (20: 33); *Eureka C. W. M. Co.* v. *Bailey W. & W. M. Co.* 78 U. S. 11 Wall. 488 (20: 209).

A patent can be canceled in the absence of a statute authorizing its cancellation.

Grant v. *Raymond*, 31 U. S. 6 Pet. 218 (8: 376).

Messrs. **E. N. Dickerson,** *Chauncey Smith* and **James J. Storrow,** for appellee:

Defects of form in the patent or of procedure in procuring it cannot raise such a necessity or such an equity as will support this bill.

Butterworth v. *U. S.* 112 U. S. 50 (28: 656); *Grant* v. *Raymond*, 31 U. S. 6 Pet. 218 (8: 376); *Kansas City L. & S. K. R. Co.* v. *Attorney-General*, 118 U. S. 682 (30: 281).

If the patentee is the meritorious first inventor, justly entitled under the law (Rev. Stat. 4893), there is no equity to support this bill; if he is not, then the patent is void in an infringement suit.

Mahn v. *Harwood*, 112 U. S. 354, 358 (28: 665, 667); *Gardner* v. *Herz*, 118 U. S. 191 (30: 163); *Polk* v. *Wendal*, 13 U. S. 9 Cranch, 99 (3: 669); *U. S.* v. *Arredondo*, 31 U. S. 6 Pet. 714 (8: 556).

A bill must allege facts, and not conclusions.

Dillon v. *Barnard*, 88 U. S. 21 Wall. 430 (22: 673); *Louisville & N. R. Co.* v. *Palmes*, 109 U. S. 244 (27: 922); *Gould* v. *Evansville & C. R. Co.* 91 U. S. 526 (23: 416); *Mosher* v. *St. Louis, I. M. & S. R. Co.* 127 U. S. 390 (32: 249).

The plaintiff must rest on the case made by the general frame of his bill, and the court cannot inquire what other grounds of relief he might have marshaled some of his facts to support.

Eyre v. *Potter*, 56 U. S. 15 How. 42 (14: 592).

A public power which touches great private interests must be exercised.

Rock Island Co. v. *U. S.* 71 U. S. 4 Wall. 435 (18: 419); *Butterworth* v. *U. S. supra.*

The jurisdiction of the court does not depend upon the relief asked, but upon the relief needed.

Atchison v. *Peterson*, 87 U. S. 20 Wall. 508 (22: 414).

Courts of equity, as courts, do not sit to investigate, but only to act; and if they cannot act effectively they will not inquire.

Marye v. *Parsons*, 114 U. S. 328 (29: 206); *U. S.* v. *Union Pac. R. Co.* 98 U. S. 589 (25: 143).

The plaintiff must state a case within the established rules of equity.

Root v. *Ry. Co.* 105 U. S. 189 (26: 975); *Gray* v. *Brignardello*, 68 U. S. 1 Wall. 627 (17: 693); *U. S.* v. *Gomez*, 68 U. S. 1 Wall. 690 (17: 677); *Providence Rubber Co.* v. *Goodyear*, 73 U. S. 6 Wall. 153 (18: 762); *Newhall* v. *Sanger*, 92 U. S. 766 (23: 770); *Gibson* v. *Chouteau*, 80 U. S. 13 Wall. 92 (20: 534).

This bill does not state a case within any of the recognized heads of equity.

A contract brought into court for cancellation may be enforced by a cross bill.

Carnochan v. *Christie*, 24 U. S. 11 Wheat. 446 (6: 516); *Bradford* v. *Union Bank*, 54 U. S. 13 How. 57 (14: 49); *The Siren*, 74 U. S. 7 Wall. 154 (19: 130); *The Davis*, 77 U. S. 10 Wall. 15 (19: 875); *U. S*, v. *Union Pac. R. Co.* 98 U. S. 569, 607 (25: 143, 152).

The exercise of any equity power is limited by the ability of the court to conclusively determine all the controversy.

Parrish v. *Ferris*, 67 U. S. 2 Black, 606 (17: 317; *Peirsoll* v. *Elliott*, 31 U. S. 6 Pet. 95 (8: 332); *Craig* v. *Leitensdorfer*, 123 U. S. 189 (31: 114); *Orton* v. *Smith*, 59 U. S. 18 How. 263 (15: 393); *Vetterlein* v. *Barnes*, 124 U. S. 169, 172 (31: 400); *Kerrison* v. *Stewart*, 93 U. S. 155, 159 (23: 843, 845); *Weale* v. *West Middlesex Waterworks Co.* 1 Jac. & W. 369; *Smith* v. *Swormstedt*, 57 U. S. 16 How. 288, 303 (14: 942, 948).

A bill to quiet title does not lie unless the right of the plaintiff has been established.

Miles v. *Caldwell*, 69 U. S. 2 Wall. 35 (17: 755); *Stark* v. *Starr*, 73 U. S. 6 Wall. 409 (18: 926); *U. S.* v. *Wilson*, 118 U. S. 89 (30: 112); *Phœnix L. Ins. Co.* v. *Bailey*, 80 U. S. 13 Wall. 616 (20: 501); *Grand Chute* v. *Winegar*, 82 U. S. 15 Wall. 373 (21: 174); *Hendrickson* v. *Hinckley*, 58 U. S. 17 How. 443 (15: 123); *Hapgood* v. *Hewett*, 119 U. S. 226 (30: 369); *Wickliffe* v. *Owings*, 58 U. S. 17 How. 47 (15: 44); *Holland* v. *Challen*, 110 U. S. 15 (28: 52); *Frost* v. *Spitley*, 121 U. S. 552 (30: 1010); *Story* v. *Livingston*, 38 U. S. 13 Pet. 359, 375 (10: 200, 208), *Shields* v. *Barrow*, 58 U. S. 17 How. 130, 139 (15: 158, 160); *Kerrison* v. *Stewart*, 93 U. S. 155, 159 (23: 843, 845).

No ground for cancellation is stated. Mistake or fraud are the only grounds for canceling a deed.

Kerr, Fraud & Mistake, 479; *Rooke* v. *Kensington*, 2 Kay & J. 753; *Fowler* v. *Fowler*, 4 DeG. & J. 250; *Sells* v. *Sells*, 1 Drew & S. 42; *Southern Developement Co.* v. *Silva*, 125 U. S. 247 (31: 678); *Grymes* v. *Sanders*, 93 U. S. 55 (23: 798); *Quinby* v. *Conlan*, 104 U. S. 425 (26: 801); *Ming* v. *Woolfolk*, 116 U. S. 599, 602 (29: 740, 741); *Slaughter* v. *Gerson*, 80 U. S. 13 Wall. 379, 383 (20: 627, 628); *Attwood* v. *Small*, 6 Cl. & F. 232.

That the patent is void for fraud alone could not prevail against a purchaser without notice.

Fletcher v. *Peck*, 10 U. S. 6 Cranch, 87, 133 (3: 162, 177); *U. S.* v. *Minor*, 114 U. S. 239 (29: 112); *Col. Coal & I. Co.* v. *U. S.* 123 U. S. 307 (31: 182); *N. O. C. & B. Co.* v. *Montgomery*, 95 U. S. 16 (24: 346); *Calais S. B. Co* v. *Scudder*, 67 U. S. 2 Black, 372 (17: 282); *Hotchkiss* v. *National S. & L. Bank*, 88 U. S. 21 Wall. 354 (22: 645); *Graham* v. *Boston H. & E. R. Co.* 118 U. S. 161, 179 (30: 205).

Lapse of time and change of circumstances disclose a want of equity fatal to this case.

McQuiddy v. *Ware*, 87 U. S. 20 Wall. 14 (22; 658); *Re Broderick's Will*, 88 U. S. 21 Wall. 519 (22: 605); *Lockwood* v. *Cleveland*, 20 Fed. Rep. 164; *Stearns* v. *Page*, 48 U. S, 7 How. 819, 829 (12: 928, 932); *Moore* v. *Greene*, 60 U. S. 19 How. 72 (15: 534); *Badger* v. *Badger*, 69 U. S. 2 Wall. 87, 94 (17: 836, 838); *Harwood* v. *Cincinnati & O. A. L. R. Co.* 84 U. S. 17 Wall. 78 (21: 558); *Marsh* v. *Whitmore*, 88 U. S. 21 Wall. 178 (22: 482); *Wood* v. *Carpenter*, 101 U. S. 135, 140, 143 (25: 807, 808, 809); *Lansdale* v.

Smith, 106 U. S. 391 (27: 219); *U. S.* v. *Throckmorton*, 98 U. S. 61, 70 (25: 93, 96); *U. S.* v. *Kirkpatrick*, 22 U. S. 9 Wheat. 735 (6: 203); *Gibbons* v. *U. S.* 75 U. S. 8 Wall. 269 (19: 453); *Hart* v. *U. S.* 95 U. S. 316 (24: 479), and cases cited; *Gaussen* v. *U. S.* 97 U. S. 584 (24: 1009); *U. S.* v. *Thompson*, 98 U. S. 486 (25: 194); *Minturn* v. *U. S.* 106 U. S. 437 (27: 208); *U. S.* v. *Bank of Metropolis*, 40 U. S. 15 Pet. 377 (10: 774).

The facts of this case are fatal on a general demurrer for want of equity.

Lansdale v. *Smith*, and *Harwood* v. *R. Co. supra; McQuiddy* v. *Ware*, 87 U. S. 20 Wall. 14, 19 (22: 311, 312); *Badger* v. *Badger*, 69 U. S. 2 Wall. 94 (17: 837); *Bowman* v. *Walthen*, 42 U. S. 1 How. 189 (11: 97); *McKnight* v. *Taylor*, 42 U.S. 1 How. 168 (11: 88); *Godden* v. *Kimmell*, 99 U. S. 201 (25: 431); *Speidel* v. *Henrici*, 120 U. S. 377 (30: 718); *Richards* v. *Mackall*, 124 U. S. 183 (31: 396); *Brent* v. *Bank of Washington*, 35 U. S. 10 Pet. 596 (9: 547); *U. S.* v. *Throckmorton*, 98 U. S. 61 (25: 93); *R. I.* v. *Mass.* 40 U. S. 15 Pet. 233, 273 (10: 721, 736).

Facts which will not affirmatively establish the defendant's right will often lead equity to leave the subject to the ordinary litigation.

Bein v. *Heath*, 47 U. S. 6 How. 228 (12: 416); *Willard* v. *Tayloe*, 75 U. S. 8 Wall. 557 (19: 501,; *King* v. *Daniel*, 1 Carpmael, Pat. Cas. 453; 1 Brodix, Pat. Cas. 392; *Grant* v. *Raymond*, 31 U. S. 6 Pet. 218 (8: 376); *Howe* v. *Underwood*, 1 Fish. Pat. Cas. 162.

Judges should not be officious to destroy a patent which in fact gave a great invention to the world.

United Tel. Co. v. *Harrison*, Goodeve, Pat. Cas. 484; *Hinks* v. *Safety Lighting Co.* L. R. 4 Ch. Div. 607.

Equity never interferes to try questions which ordinary litigation can decide.

Marquez v. *Frisbie*, 101 U. S. 473 (25: 800); *U. S.* v. *Atherton*, 102 U. S. 372 (26: 213); *Smith* v. *Ely*, 56 U. S. 15 How. 143 (14: 636); *Louisville & N. R. Co.* v. *Palmes*, 109 U. S. 244 (27: 922); *King* v. *Gallun*, 109 U. S. 99, 101 (27: 870); *Ah Kow* v. *Nunan*, 5 Sawy. 560; *Brown* v. *Piper*, 91 U. S. 37 (23: 200); *Terhune* v. *Phillips*, 99 U. S. 592 (25: 293).

The court knows the fact that there has been fierce litigation about this patent and the results of it. The records of this court are full of such instances of judicial notice.

Smith v. *Ely*, 56 U. S. 15 How. 137 (14; 634); *Gregg* v. *Tesson*, 68 U. S. 1 Black, 151 (17: 74); *Pensacola Teleg. Co.* v. *Western Union Teleg. Co.* 96 U. S. 1 (24: 708); *U. S.* v. *Union Pac. R. Co.* 98 U. S. 569 (25: 143); *Sinking Fund Cases*, 99 U. S. 700 (25: 496); *Wade* v. *Walnut*, 105 U. S. 1 (26: 1027), *Gilson* v. *Dayton*, 123 U. S. 59 (31; 74); *Crow* v. *Oxford*, 119 U. S. 215 (30: 388); *New Hampshire* v. *Louisiana*, 108 U. S. 76 (27: 656; *La.* v. *Jumel* and *Elliott* v. *Wiltz*, 107 U. S. 711 (27: 448).

The court takes notice of matters of public knowledge.

Louisville & N. R. Co. v. *Palmes*, 109 U. S. 244 (27: 922).

Whether two papers describe the same invention is a question the court will decide on demurrer.

Powder Co. v. *Powder Works*, 98 U. S. 126 (25: 77).

The power invoked does not exist in the executive department nor in the circuit courts.

Osborn v. *Bank of U. S.* 22 U. S. 9 Wheat. 738 (6: 204); *Keokuk Northern Line Packet Co.* v. *Keokuk*, 95 U. S. 80, 85 (24: 377, 380); *Huss* v. *Glover*, 119 U. S. 543 (30: 487); *U. S.* v. *State Bank*, 96 U. S. 30 (24: 647).

No subject could in any way assail a royal grant.

Darcy v. *Allein*, 11 Coke, 84.

The King had a prerogative to recall the grant, and the power to do this was usually reserved in each patent.

Hindmarch, 62, 431.

The ultimate cancellation depended upon the royal will. No court whatever had power in England to issue such a *scire facias*. It issued only by royal command.

Hindmarch, 381–8, 710, 715, 728, 729, *Bynner* v. *Reg.* 9 Q. B. N. S. 523; *The Magdalen College Case*, 11 Coke, 74; *Legat's Case*, 10 Coke, 113.

A legislative grant cannot be impeached in court for fraud or misrepresentation in procuring it, or on the ground of forfeiture.

The Maxwell Land Grant Case, 121 U. S. 325 (30: 949); *St. Louis I. M. & S. R. Co.* v. *McGee*, 115 U. S. 469 (29: 446); *Arnson* v. *Murphy*, 109 U. S. 238 (27: 920); *McMicken* v. *U. S.* 97 U. S. 204 (24: 947); *Farnsworth* v. *Minn. & Pac. R. Co.* 92 U. S. 49 (23: 530); *Schulenberg* v. *Harriman*, 88 U. S. 21 Wall. 44 (22: 551); *Fletcher* v. *Peck*, 10 U. S. 6 Cranch, 87 (3: 162); Hindmarch, Patents, 384.

We can find no trace of a bill in equity to cancel a patent for an invention in any of the English books.

Attorney-General v. *Vernon*, 1 Vern. 277; *Reg.* v. *Prosser*, 11 Beav. 306.

This court has vigorously set its face against the judicial implication of remedies—particularly sovereign remedies.

Evans v. *Jordan*, 13 U. S. 9 Cranch, 199 (3: 704); *Rees* v. *Watertown*, 86 U. S. 19 Wall. 107 (22: 72); *Heine* v. *Levee Comrs.* 86 U. S. 19 Wall. 656 (22: 223); *Thompson* v. *Allen County*, 115 U. S. 550 (29: 472); *The Credit Mobilier Case*, 98 U. S. 569 (25: 143).

The ordinary litigation is sufficient here.

Tilghman v. *Proctor*, 102 U. S. 708 (26: 279); *Mitchell* v. *Tilghman*, 86 U. S. 19 Wall. 287 (22: 125); *Ingersoll* v. *Turner*, 7 Fed. Rep. 859; *U. S. Stamping Co.* v. *King*, Id. 860; *Ex Parte Wood*, 22 U. S. 9 Wheat. 603 (6: 171).

Courts do not possess this prerogative power in the absence of legislation. The sole power about patents for inventions was given to Congress.

Hamilton v. *Dillin*, 88 U. S. 21 Wall. 74 (22: 528); *Rees* v. *Watertown*, 86 U. S. 19 Wall. 123 (22:76); *Butterworth* v. *U. S.* 112 U. S. 50 (28: 656); *The Floyd Acceptances*, 74 U. S. 7 Wall. 676 (19: 173); *U. S.* v. *Union Pac. R. Co.* 98 U. S. 569 (25: 143); *Bank of Columbia* v. *Okely*, 17 U. S. 4 Wheat. 235 (4: 559); *Maryland* v. *Baltimore & O. R. Co.* 89 U. S. 22 Wall. 112 (22: 714).

A court of equity cannot create a remedy without the authority of law.

Rees v. *Watertown*, 86 U. S. 19 Wall. 123 (22:77); *U. S.* v. *Union Pac. R. Co.* 91 U. S. 72 (23: 224); *Kohl* v. *U. S.* 91 U. S. 367 (23: 449); *U. S.* v. *Great Falls Mfg. Co.* 112 U. S. 645

(28:846); *Miss. & Run River Boom Co.* v. *Patterson*, 98 U. S. 403 (25:206).

No prerogative or sovereign powers can be exercised by the circuit courts under the Judiciary Act, nor unless specially conferred.

Heine v. *Levee Comrs.* 86 U. S. 19 Wall. 655 (22:223); *Ex parte Vallandigham*, 68 U. S. 1 Wall. 243 (17:589); *Wisconsin* v. *Pelican Ins. Co.* 127 U. S. 265 (32:239); *Georgetown* v. *Alexandria Canal Co.* 37 U. S. 12 Pet. 91 (9:1012); *Irwin* v. *Dixion*, 50 U. S. 9 How. 27 (13:33); *Miller* v. *Kerr*, 20 U. S. 7 Wheat. 1 (5:381); *Davenport* v. *Dodge Co.* 105 U. S. 242 (26:1020); *Root* v. *Lake Shore & M. S. R. Co.* 105 U. S. 189 (26:975); *Pa.* v. *Wheeling & B. Bridge*, 54 U. S. 13 How. 518, 559 (14:249, 266); *U. S.* v. *Union Pac. R. Co.* 98 U. S. 569 (25:143); *Cotton* v. *U. S.* 52 U. S. 11 How. 229 (13:675).

In *United States* v. *Hughes*, 52 U. S. 11 How. 552, 568 (13:809, 816), this court decided that it could not cancel a patent except on the footing of relief to a property owner.

See *U. S.* v. *Schurz*, 102 U. S. 396 (26:167); *U. S.* v. *Beebe*, 127 U. S. 338 (32:121).

The Judiciary Act does not confer upon the courts all those sovereign powers which could be exercised through the judiciary.

U. S. v. *Union Pac. R. Co.* 98 U. S. 569 (25:143).

Governing power cannot be used by the courts without an express grant.

People v. *Ingersoll*, 58 N. Y. 1; *Atty-Gen.* v. *Utica Ins. Co.* 2 Johns. Ch. 371; *Wheeler* v. *Smith*, 50 U. S. 9 How. 55 (13:44); *Fontain* v. *Ravenel*, 58 U. S. 17 How. 369 (15:80); *Wisconsin* v. *Pelican Ins. Co.* 127 U. S. 265 (32:239); *Pa.* v. *Wheeling & B. Bridge*, 54 U. S. 13 How. 518 (14:249).

The Cy pres Prerogative.

No federal court has this power in any form for a grant of the broadest equity powers does not confer it.

Phila. Baptist Asso. v. *Hart*, 17 U. S. 4 Wheat. 1 (4:499); *Wheeler* v. *Smith*, 50 U. S. 9 How. 55 (13:44); *Vidal* v. *Girard*, 43 U. S. 2 How. 127 (11:205); *Fontain* v. *Ravenel*, 58 U. S. 17 How. 369 (15:80); *Perin* v. *Carey*, 65 U. S. 24 How. 465 (16:701); *Russell* v. *Allen*, 107 U. S. 163, 169 (27:397, 399).

The fact that the extensive legislation about patents does not confer the power, forbids it.

Bowman v. *Chicago & N. W. R. Co.* 125 U. S. 465 (31:700); *Ex parte Yarbrough*, 110 U. S. 652 (28:274).

When Congress has acted by the Judiciary Act, then the supreme court has what power that Act confers and no more.

Ex parte Gordon, 66 U. S. 1 Black, 503 (17:134); *Ex parte McCardle*, 74 U. S. 7 Wall. 506 (19:264).

As to relations of the war powers of the Executive to legislation, see:

Mechanics Bank v. *Union Bank*, 89 U. S. 22 Wall. 276, 295, 297 (23:871, 872, 873); *Hamilton* v. *Dillin*, 88 U. S. 21 Wall. 73 (22:528); *Ex parte Milligan*, 71 U. S. 4 Wall. 2 (18:281); *Brown* v. *U. S.* 12 U. S. 8 Cranch, 110 (3:504); *Conrad* v. *Waples*, 96 U. S. 279 (24:721).

The exercise of sovereign powers in court does not belong to the Executive.

U. S. v. *McLemore*, 45 U. S. 4 How. 286 (11:977); *The Davis*, 77 U. S. 10 Wall. 15 (19:875); *Case* v. *Terrell*, 78 U. S. 11 Wall. 199 (20:134); *Carr* v. *U. S.* 98 U. S. 433 (25:209); *U. S.* v. *Lee*, 106 U. S. 196 (27:171); *U. S.* v. *Hudson*, 11 U. S. 7 Cranch, 32 (3:259).

The same rule of the necessity of legislation for the exercise of prerogative powers applies even to the action of one of the Houses of Congress.

Kilbourn v. *Thompson*, 103 U. S. 168 (26:377).

Specific legislation about patents has forbidden this suit.

Bowman v. *Chicago & N. W. R. Co.* 125 U. S. 465 (31:700); *Cooley* v. *Port Wardens*, 53 U. S. 12 How. 299 (13:996); *Mobile Co.* v. *Kimball*, 102 U. S. 691 (26:238); *Shaw* v. *Cooper*, 32 U. S. 7 Pet. 318 (8:698); *Butterworth* v. *U. S.* 112 U. S. 50 (28:656).

The legislation of 1790 and 1793.

The decisions under these statutes about the power to cancel were the following:

Grant v. *Raymond*, 31 U. S. 6 Pet. 218 (8:376); *Ex parte Wood*, 22 U. S. 9 Wheat. 603 (6:171).

Butterworth v. *U. S.* 112 U. S. 50 (28:656), establishes the rules which govern all questions of power in the administration of the patent system.

The following cases contain all the judicial expressions on the subject:

Providence Rubber Co. v. *Goodyear*, 76 U. S. 9 Wall. 811 (19:589); *Mowry* v. *Whitney*, 81 U. S. 14 Wall. 620, 434 (20:860, 858); *Miss.* v. *Johnson*, 71 U. S. 4 Wall. 500 (18:441); *Merserole* v. *Union Paper Collar Co.* 6 Blatchf. 356; *U. S.* v. *Doughty*, 7 Blatchf. 424.

Neither the Attorney-General nor any court can assail a legislative grant. It cannot be attacked for the grossest frauds in procuring it, unless the Legislature has given express power to do so.

Schulenberg v. *Harriman*, 88 U. S. 21 Wall. 44 (22:551); *St. Louis I. M. & S. R. Co.* v. *McGee*, 115 U. S. 469 (29:446); *McMicken* v. *U. S.* 97 U. S. 204 (24:947); *Farnsworth* v. *Minnesota & Pac. R. Co.* 92 U. S. 49 (23:530); *Ryan* v. *Carter*, 93 U. S. 78 (23:807); *Tameling* v. *U. S. Freehold & Emigrant Co.* 93 U. S. 644 (23:998); *Slidell* v. *Grandjean*, 111 U. S. 439 (28:330); *Whitney* v. *Morrow*, 112 U. S. 693 (28:871); *The Maxwell Land-Grant Case*, 121 U. S. 325, 366 (30:949, 953); *U. S.* v. *Frazer*, 22 Fed. Rep. 106; *U. S.* v. *Colgate*, 32 Fed. Rep. 624.

Preliminary injunctions to restrain litigation pending a suit to cancel a patent under the interference section 4918, cannot be entertained against a sustained patent.

Asbestos Felting Co. v. *U. S. & F. S. F. Co.* 12 Blatchf. 453; *Celluloid Mfg. Co.* v. *Goodyear Dental Vulcanite Co.* 13 Blatchf. 375; *Mahn* v. *Harwood*, 112 U. S. 354 (28:665).

There can be no equity to support a bill to cancel a sustained patent on grounds which are open in an infringement suit.

Smith v. *McIver*, 22 U. S. 9 Wheat. 534 (6:153); *Miles* v. *Caldwell*, 69 U. S. 2 Wall. 35 (17:755); *Mt. Zion* v. *Gilman*, 9 Biss. 479; *Providence Rubber Co.* v. *Goodyear*, 76 U. S. 9 Wall. 788 (19:566); *U. S.* v. *Frazer*, 22 Fed. Rep. 106.

Mr. Justice **Miller** delivered the opinion of the court: [349]

This is an appeal from the Circuit Court of

the United States for the District of Massachusetts.

[350] The United States brought its suit in equity in that court against the American Bell Telephone Company, a Corporation organized under the laws of the State of Massachusetts, and against Alexander Graham Bell, a resident of the District of Columbia. The action purports to have been instituted by George M. Stearns, the United States District Attorney for that District, by the direction of George A. Jenks, the Solicitor-General of the United States, acting as its Attorney-General in this matter, because the latter officer was under a disability to prosecute this suit.

The object of the bill was to impeach two patents for inventions issued to said Bell, the first dated March 7, 1876, and numbered 174,465, and the second dated January 30, 1877, and numbered 186,787, with a prayer that they be declared void and of no effect, and that they be in all things recalled, repealed and decreed absolutely null; that they be erased and obliterated from the records of the Patent Office; and for other relief.

To this bill the Telephone Company entered an appearance and filed a demurrer. It is not shown that Bell either appeared or filed any pleading. At the hearing on the demurrer it was sustained by the circuit court, the bill dismissed, and the United States has brought the present appeal to reverse that ruling.

The defendant demurs generally to the whole bill, and in that demurrer objects to specific portions of the bill; and it may be very doubtful whether these are not so mixed up in the same pleading as to make the demurrer void, so far as it relates to such parts of it. As the main questions on the demurrer, however, relate to matters which go to the merits of the whole bill, they are probably all that is necessary to consider here. Some of these points of demurrer, although stated as such in a general demurrer, are manifestly only such as could be taken under a special demurrer, and would not, if successful, defeat the entire bill.

The grounds of demurrer which we shall consider in this opinion are as follows:

First. "That the said bill is multifarious, in [351] that it joins allegations and prayers for relief in respect of patent No. 174,465, dated March 7, 1876, and allegations and prayers for relief in respect of patent No. 186,787, dated January 30, 1877"

Second. The defendant demurs as to each patent specifically, "that the complainant, in and by its said bill, does not show any power or authority, and no power or authority in law exists, in any person or party, or any court, to bring said suit, nor to entertain the same, nor to give the relief therein prayed, nor any relief thereunder or touching the subject matter thereof;" and further, "that the complainant, in and by said bill, has not made or stated a case which calls upon or justifies this court, in the exercise of its discretion, to permit this bill to be entertained."

Third. The defendant specially demurs to the bill, "for that it does not set forth any fraud in the procuring of said patents; and for that it does not specifically set forth what acts, if any, the complainant relies on as constituting fraud in procuring said patents; and for that it does not show when, how, from whom, or by what means the complainant first had knowledge or notice of each alleged fact, nor why, with due diligence, it would not have learned them earlier;" and also "because the allegations contained in said bill, if true, would not entitle the complainant to the relief prayed for, or to any relief in a court of equity."

While these grounds of demurrer are stated in the language of the demurrer itself, we have grouped them somewhat differently from the mode in which they are there stated, because we think the consideration of the three causes of demurrer here laid down must dispose of the case before us.

With regard to the question of multifariousness, we do not think it needs much consideration. It is very true that the bill assails two patents, issued nearly a year apart, but they were issued to the same party, Alexander Graham Bell, and relate to the same subject, that of communicating messages at a distance by speech, and by the same general mode, the later patent being supposed to be for an improvement upon the invention of the earlier one. Both are held by the same defendant, the Amer- [352] ican Bell Telephone Company, and are used by it in the same operations.

The principle of multifariousness is one very largely of convenience, and is more often applied where two parties are attempted to be brought together by a bill in chancery who have no common interest in the litigation, whereby one party is compelled to join in the expense and trouble of a suit in which he and his codefendant have no common interest, or in which one party is joined as complainant with another party with whom in like manner he either has no interest at all, or no such interest as requires the defendant to litigate it in the same action. *Oliver* v. *Piatt*, 44 U. S. 3 How. 333 [11:622]; *Walker* v. *Powers*, 104 U. S. 245 [26:729].

In the present case there is no such difficulty. The Bell Telephone Company and Mr. Bell himself are the only parties defendant, and their interest in sustaining the patents is the same. So also there is no such diversity of the subject matter embraced in the assault on the two patents that they cannot be conveniently considered together, and although it may be possible that one patent may be sustained and the other may not, yet it is competent for the court to make a decree in conformity with such finding. It seems to us in every way appropriate that the question of the validity of the two patents should be considered together.

It will be convenient, as a means of showing specifically the ground of complaint in the bill, to take up next the third group of the causes of demurrer. The point intended to be presented there is that the bill does not set forth any fraud in the procuring of the patents, and does not specifically set forth what acts, if any, the complainant relies upon as constituting fraud in their procurement, and also that the allegations contained in the bill, if true, would not entitle the complainant to the relief prayed for, nor to any relief in a court of equity. Assuming for the present that the Circuit Courts of the United States have the same jurisdiction in equity, in a case where the United States itself is plaintiff, that they have where a citizen is plaintiff, to relieve against accident, mistake, fraud, co-

vin and deceit, we proceed to examine into the sufficiency of the allegations in this bill to maintain such a suit.

[353] The fifth claim of invention of the patent of March 7, 1876, which was held to be a sufficient claim for an invention in the recent *Telephone Cases*, decided March 19, 1888, and reported in 126 U. S. [31:863] is as follows:

"5. The method of, and apparatus for, transmitting vocal or other sounds telegraphically, as herein described, by causing electrical undulations, similar in form to the vibrations of the air accompanying the said vocal or other sounds, substantially as set forth."

The claims of invention under the patent of January 30, 1877, are eight in number, and may be stated generally to be for improvements in the instruments by which the vocal sounds mentioned in the foregoing paragraph are conveyed and received. The bill alleges that Bell, the patentee, knew at the time of filing his application for the patent of March 7, 1876, that he was not the original and first inventor, as the law required he should be, of all the improvements in telegraphy described and claimed in said specification; "that certain of the so-called improvements had been previously known to and used by others, as is hereinafter more fully and at large set forth; that the said Bell, on the 20th day of January, 1876, and at the time of filing the said application, did not verily believe himself to be the original and first inventor of all the so-called improvements in telegraphy described and claimed in the said specification; and that on the said 20th day of January, 1876, and at the time of filing the said application, the said Bell did know and did believe that certain of the so-called improvements in telegraphy described and claimed in the specification aforesaid had been previously known to and used by others, as is hereinafter more fully set forth."

It is then charged that the said untrue statements made by said Bell constituted deception and fraud upon the Government, and did deceive and defraud complainant, and did cause complainant to issue and deliver said patent, No. 174,465, to said Bell; and that but for said fraudulent statements of said Bell said patents would not have been issued.

The bill alleges, also, that in his application for the patent Bell misled the Patent Office by [354] a statement that his invention was for "an improvement in telegraphy," and especially for a patent for a method of "multiple telegraphy;" and that he carefully and intentionally refrained from any expression which would lead to the idea that his invention was to be used as a telephone, or was capable of such use.

The bill then proceeds to describe various discoveries in the art of conveying articulate sounds by telegraphic wires prior to that of Bell, with which it is alleged Bell himself was well acquainted, and which anticipated his discovery, and render his patent void. Among them are those of Philip Reis, of Germany, Elisha Gray, of Chicago, and certain fraudulent practices with regard to Gray's claim are charged upon Bell. It is also claimed that Bell was anticipated in the discovery of an electrical speaking telephone by Philip Reis, Cromwell Fleetwood Varley, Antonio Meucci, Elisha Gray, Thomas A. Edison, Asahel K. Eaton, and many others.

The bill further charges "that said Bell well knowing that he was not the inventor of the art of transmitting speech by an electric speaking telephone, and also that the patent of March 7, 1876, neither in the drawings, specifications, nor claims of said patent, described any apparatus or device by which articulate speech could be transmitted through the instrumentality of electricity, as perfectly or as well as articulate speech had been transmitted prior to the alleged said invention, through the instrumentality of electricity, by the use of well known pre-existing methods and apparatus, sought to fortify himself in his wrongful claim and more completely to secure to himself the monopoly since alleged by him to be described in said patent, and to further impose upon your orator and the Patent Office, and to that end, on or about January 15, 1877, made another application for a patent to be issued to him, upon which application a patent was issued, No. 186,787, dated January 30, 1877 which said patent purports to be granted to him for a new and useful improvement in electric telegraphy."

It is then charged "that at the time said Bell applied for said last mentioned patent he well knew that every material part, portion and device and apparatus set forth and described in [355] his said patent and specification, were not his invention, but that the several elements, considered either separately or combined, had been taken bodily by him from well known and existing apparatus, devices and plans invented and contrived by others for the purpose of transmitting articulate speech by means of electricity."

The charge is also made "that he so framed the several claims in said patent, No. 186,787, as on the face thereof to give him and his associates the practical monopoly of well known and essential devices used and combined in all instruments for the transmission of articulate speech by electricity."

It is also asserted that "Said Bell procured his last named patent by fraud upon one Amos E. Dolbear, Professor of Physics at Tufts College, in Massachusetts," in a manner and under circumstances which are minutely described in the bill.

It seems to us that if Bell was aware, at the time that he filed his specifications, asserted his claims, and procured his patents, that the same matter had been previously discovered and put into operation by other persons, he was guilty of such a fraud upon the public that the monopoly which these patents grant to him ought to be revoked and annulled. We will consider hereafter the power and duty of the court in such a case; at present we are concerned with the sufficiency of the allegations; that is to say, whether the allegation of this fraud is made with such minuteness and sufficiency of detail as to require an answer on the part of the defendants.

The fraud alleged is precisely the fraud which would be committed in a case of that kind. It is a fraud of obtaining a patent for an invention of which the party knew he was not the original inventor. This priority of invention is an essential element; it is absolutely necessary to

the right to have such a patent, and can in no case be dispensed with. It may be possible that a patent would not be absolutely void where the patentee was not really the first inventor, and the Act of Congress made provision that any man sued for an infringement of such patent might prove that the patentee was not the original discoverer or inventor. But we do not decide here whether a patent is absolutely
356] void because the patentee is not the first inventor, nor whether a court of equity should set aside a patent where the party had obtained it without fraud or deceit, believing himself to be the first inventor. It is sufficient for the present case, in which, on demurrer, we wish to decide nothing more than is necessary to determine whether the defendant should be called to answer the bill, to say that the charge here is that he knew he was not the first inventor, and that his efforts to procure the patent were fraudulent, because he was aware that he was obtaining a patent to which he was not in law or equity entitled.

Nor is the objection to the bill, that it does not allege the facts which constitute the fraud, well taken. The guilty knowledge is well and fully stated, the prior inventions and discoveries and their authors are alleged to have been known to Bell, and are mentioned with sufficient precision, and his connection with some of them, especially in the case of Dr. Gray and others, is set forth with minute particularity. It is a mistake to suppose that in stating the facts which constitute a fraud, where relief is sought in a bill in equity, *all* the evidence which may be adduced to prove that fraud must be recited in the bill. It is sufficient if the main facts or incidents which constitute the fraud against which relief is desired shall be fairly stated, so as to put the defendant upon his guard and apprise him of what answer may be required of him. Story, Eq. Pl. § 252.

In all these particulars we think the bill is sufficiently explicit. There can be no question that if the bill, as is the general rule on demurrers, is to be taken as true, there is enough in it to establish the fraud in the procurement of the patent, and to justify its cancellation or rescission, if the court has jurisdiction to do so. *Harding* v. *Handy*, 24 U. S. 11 Wheat. 103 [6: 429]; *St. Louis* v. *Knapp Co.* 104 U. S. 658 [26: 883].

But the second group of causes of demurrer is perhaps the most important, and the one on which counsel seem to have principally relied, the essence of which is, that "No power or authority in law exists, in any person or party, or any court, to bring said suit, nor to entertain the same, nor to give the relief therein prayed, nor any relief thereunder or touching
357] the subject matter thereof," and "that the complainant has not made or stated a case which calls upon or justifies this court in the exercise of its discretion to permit this bill to be entertained."

It will be observed that this broad assertion admits that a party may practice an intentional fraud upon the officers of the Government, who are authorized and whose duty it is to decide upon his right to a patent, and that he may by means of that fraud perpetrate a grievous wrong upon the general public, upon the United States and upon its representatives. It admits that by prostituting the forms of law to his service he may obtain an instrument, bearing the authority of the Government of the United States, entitling him to a monopoly in the use of an invention which he never originated, of a discovery which was made by others, and which, however generally useful or even necessary it may become, is under his absolute and exclusive control, either as to that use or as to the price he may charge for it, during the life of the grant. It assumes that the Government, which has thus been imposed upon and deceived, is utterly helpless, and that it can take no steps to correct the evil or to redress the fraud. If such a fraud were practiced upon an individual he would have a remedy in any court having jurisdiction to correct frauds and mistakes and to relieve against accident; but it is said that the Government of the United States—the representative of sixty millions of people, acting for them, on their behalf, and under their authority—can have no remedy against a fraud which affects them all, and whose influence may be unlimited.

Though, by the Constitution of the United States, it is declared that "The judicial power shall extend to all cases, in law and equity, arising under this Constitution, the laws of the United States, and treaties made, or which shall be made, under their authority," and "to controversies to which the United States shall be a party," the argument asserts that the practice of a gross fraud upon the United States, concerning matters of immense pecuniary value, and affecting a very large part of its population, is not a proper question of judicial cognizance. It would be a strange anomaly in a government organized upon a system which rigidly [358]
separates the powers to be exercised by its executive, its legislative and its judicial branches, and which in this emphatic language defines the jurisdiction of the judicial department, to hold that in that department there should be no remedy for such a wrong.

As we shall presently see, this court has repeatedly held, after very full argument, and after a due consideration of the proposition here stated, that in regard to patents issued by the Government for lands conveyed to individuals or to corporations, the Circuit Courts of the United States do have jurisdiction to set aside and cancel them for frauds committed by the parties to whom they were issued. This class of cases will be considered further on. It is sufficient to say here that they establish the right of the United States to bring suits in its own courts to be relieved against fraud committed in cases of that class exactly similar to that charged in the present case. And it is also to be observed that in those cases there is no express Act of Congress authorizing such procedure, a ground of objection which is here urged.

Recurring to the Constitution itself as the great source of all power in the United States, whether executive, legislative or judicial, there is a striking similarity in the language of that instrument conferring the power upon the Government under which patents are issued for inventions and patents are issued for lands. It is declared in article 1, § 8, ¶ 8, that "The Congress shall have power . . . to promote the progress of science and useful arts, by se-

curing for limited times to authors and inventors the exclusive right to their respective writings and discoveries." It is by virtue of this clause that Congress has passed the laws under which the patents of the defendant in this case were issued.

Article 4, § 3, ¶ 2, declares that "The Congress shall have power to dispose of and make all needful rules and regulations respecting the territory or other property belonging to the United States." It is under this clause that Congress has passed laws by which title to public lands is conveyed to individuals, by instruments also called patents.

The power, therefore, to issue a patent for [359] an invention, and the authority to issue such an instrument for a grant of land, emanate from the same source, and although exercised by different bureaux or officers under the Government, are of the same nature, character and validity, and imply in each case the exercise of the power of the Government according to modes regulated by Acts of Congress.

With regard to the jurisdiction of the circuit court in which this suit was brought, there does not seem to be any objection made by defendants, if such suit could be brought in any court. Indeed, the language of the Act of Congress on that subject does not admit of any such doubt, for it declares "that the Circuit Courts of the United States shall have original cognizance, concurrent with the courts of the several States, of all suits of a civil nature at common law or in equity, where the matter in dispute exceeds, exclusive of costs, the sum or value of five hundred dollars, and arising under the Constitution or laws of the United States, or treaties made, or which shall be made, under their authority, or in which the United States are plaintiffs or petitioners." 18 U. S. Stat. at L. 470, Act of March 3, 1875.

In the present case the United States are plaintiffs, and the bill asserts that the suit is one of a civil nature, and of equitable cognizance; and manifestly, if it presents a good cause of action, it arises under the laws and Constitution of the United States. It is, therefore, within the language, both of the Constitution and of the statute conferring jurisdiction on the circuit courts. An examination of the specific objections made to the present bill will illustrate and enforce this general view. While it cannot successfully be denied that the general powers of a court of equity include the right to annul and set aside contracts or instruments obtained by fraud, to correct mistakes made in them, and to give all other appropriate relief against documents of that character, such as requiring their delivery up, their cancellation, or their correction, in order to make them conform to the intention of the parties, it would seem to require some special reason why the Government of the United States should not be able to avail itself of these powers of a court of equity. Accordingly, the defendant ob- [360] jects that the appropriate remedy, if any exists, is in the common-law courts, and not in a court of equity, and that in the ancient proceedings of our English ancestors, in regard to patents, the only remedy for relief against them, when they were improvidently issued, was by a *scire facias* in the name of the King, or by his express and personal revocation of them.

Charters and patents authenticating grants of personal privileges were in the earlier days of the English Government made by the Crown. They were supposed to emanate directly from the King, and were not issued under any authority given by Acts of Parliament, nor were they regulated by any statutes. Being, therefore, in their origin an exercise of his personal prerogative, the power of revoking them, so far as they could be revoked at all, was in the King, and was exercised by him as a personal privilege. This mode of revoking patents, however, seems to have fallen into disuse, and the same end was attained by the issue of writs of *scire facias* in the name of the King to show cause why the patents should not be repealed or revoked. These were, of course, returnable into some court, and it appears to have been the practice to do this in the Court of King's Bench, or in the Court of Chancery, where the record of the patent always remained in what was called the Petty Bag Office. If the latter mode is to be considered a proceeding in chancery which, under our adoption of the methods and jurisdiction of the High Court of Chancery in England, would fall within the province of a chancery court in this country, then the precedent for the exercise of this jurisdiction by a court of chancery is clear and undoubted. This, however, is a question which, if not in relation to this particular class of cases, has in regard to others, concerning the prerogative jurisdiction of the court of chancery in this county, been doubted. But the courts of England seem to have considered that in the matter of repealing or revoking a patent the King may sue in what court he pleases. See *Magdalen College Case*, 11 Coke, 68 *b* and 75 *a*.

The jurisdiction to repeal a patent by a decree of a court of chancery as an exercise of its ordinary powers was sustained in the case of [361] *Attorney-General* v. *Vernon*, 1 Vern. 277. In that action a bill was brought by the Attorney-General against Vernon and others to set aside a patent issued by the Crown, on the ground that it was obtained by surprise and by false particulars. It was insisted by the defendant's counsel that there never had been any precedent of this nature to repeal letters patent by an English bill in chancery, but that it was a case of first impression; and they contended that the title under the letters patent was one purely at law and returnable there; likewise, that there was a remedy by *scire facias*. It was also objected that the word 'fraud,' which, if anything, must give jurisdiction to the court in the case, was not in the whole bill. Also, among other things, it was objected that if letters patent should be impeached by an English bill in chancery upon such suggestions and pretensions as these, no patentee could be safe, nor would the King's seal be of any force. To this it was replied, on the part of the King, that he may sue in what court he pleases; that the bill charges surprise and false particulars, and that fraud is properly relievable here; that the King ought not to be in a worse condition than a subject; that a nobleman would be relieved of such a fraud put upon him by his servant; and that, if the King could not be re-

lieved in this case by an English bill, he would be without remedy. Whereupon the Lord Keeper said: "The question is short, whether there be a fraud or not? If a fraud, it is properly relievable here. It is not fit such a matter as this should be stifled upon a plea; and therefore the Lord Keeper overruled the plea and denied to save the benefit of it till the hearing, because he would not give any countenance to such a case."

So far as precedent is concerned, this case, which has never been overruled, establishes the doctrine that in a case of fraud in the obtaining of a patent, a court of chancery, by virtue of that fact, has jurisdiction to repeal or revoke it.

The case of *The King* v. *Butler*, 3 Lev. 220, which was heard in the House of Lords, was one where the King had made a grant of a market by letters patent to Sir Oliver Butler, the defendant. A writ of *scire facias* was brought in [362] the Court of Chancery to repeal the grant, and the Lord Chancellor gave judgment that it should be vacated; whereupon, the matter was brought by a writ of error to the House of Lords, and, after argument there, the Peers requested the opinion of the judges then attending in Parliament, who all unanimously agreed that the judgment given in chancery ought to be affirmed, and delivered their opinion accordingly. It was objected that the writ did not lie, because there was a remedy by the common law, to wit, by assize of nuisance, where the matter should be tried by a jury, and by several judges, and not by one only, as it is in chancery. To which they answered, that the King has an undoubted right to repeal a patent wherein he is deceived or his subjects prejudiced. And in none of the cases cited was there any question whether the writ would lie, but only the manner of pursuing it, and other incident matters. It was said that it was not unusual for the King to have his remedy as well as the subject also.

The whole text of the answers of the judges in this case seems to imply that a jury was not necessary, but that the existence of the record in the Court of Chancery was a sufficient foundation for the proceeding there, though it might be brought in some other court, when the King had declared the patent forfeited, or when there had been office found. The judgment of the Court of Chancery was therefore affirmed. See on this subject *Queen* v. *Aires*, 10 Mod. 354; *Queen* v. *Eastern Archipelago Co.* 1 El. & Bl. 310; *Cumming* v. *Forrester*, 2 Jac. & W. 341.

But whatever may have been the course of procedure usual or requisite in the English jurisprudence, to enable the King to repeal, revoke or nullify his own patents, issued under his prerogative right, it can have but little force in limiting or restricting the measures by which the Government of the United States shall have a remedy for an imposition upon it or its officers in the procurement or issue of a patent. We have no king in this country; we have here no prerogative right of the Crown; and letters patent, whether for inventions or for grants of land, issue not from the President but from the United States. The President has [363] no prerogative in the matter. He has no right to issue a patent, and, though it is the custom for patents for lands to be signed by him, they are of no avail until the proper seal of the Government is affixed to them. Indeed, a recent Act of Congress authorizes the appointment of a clerk for the special purpose of signing the President's name to patents of that character. And so far as patents for inventions are concerned, whatever may have been the case formerly, since the Act of July 8, 1870, they are issued without his signature and without his name or his style of office being mentioned in them. The authority for this procedure is embodied in the following language of the Revised Statutes:

"Sec. 4883. All patents shall be issued in the name of the United States of America, under the seal of the Patent Office, and shall be signed by the Secretary of the Interior and countersigned by the Commissioner of Patents, and they shall be recorded, together with the specifications, in the Patent Office, in books to be kept for that purpose."

This only expresses the necessary effect of the Acts of Congress. The authority by which the patent issues is that of the United States of America. The seal which is used is the seal of the Patent Office, and that was created by congressional enactment. It is signed by the Secretary of the Interior, and the Commissioner of Patents, who also countersigns it, is an officer of that Department. The patent, then, is not the exercise of any prerogative power or discretion by the President or by any other officer of the Government, but it is the result of a course of proceeding, *quasi* judicial in its character, and is not subject to be repealed or revoked by the President, the Secretary of the Interior, or the Commissioner of Patents, when once issued. See *United States* v. *Schurz*, 102 U. S. 378 [26: 167].

It is not without weight, in considering the jurisdiction of a court of equity in regard to the power to impeach patents, that an appeal is provided from the decision of the Commissioner of Patents to the Supreme Court of the District of Columbia, and that the Revised Statutes enact as follows:

"Sec. 4915. Whenever a patent on application is refused, either by the Commissioner of [364] Patents, or by the Supreme Court of the District of Columbia upon appeal from the Commissioner, the applicant may have remedy by bill in equity; and the court having cognizance thereof, on notice to adverse parties and other due proceedings had, may adjudge that such applicant is entitled, according to law, to receive a patent for his invention, as specified in his claim, or for any part thereof, as the facts in the case may appear." It is then further provided, that, if the adjudication be in favor of the applicant, it shall authorize the Commissioner of Patents to issue such patent upon the applicant's filing in the Patent Office a copy of the adjudication.

These provisions, while they do not in express terms confer upon the courts of equity of the United States the power to annul or vacate a patent, show very clearly the sense of Congress that if such power is to be exercised anywhere it should be in the equity jurisdiction of those courts. The only authority competent to set a patent aside, or to annul it, or to correct it, for any reason whatever, is vested

in the Judicial Department of the Government, and this can only be effected by proper proceedings taken in the Courts of the United States.

This subject has been frequently discussed in this court, and the principles necessary to its decision have been well established. The case of *United States* v. *Stone*, 69 U. S. 2 Wall. 525 [17: 765], was a bill in chancery brought by the United States, in the Circuit Court for the District of Kansas, to set aside a patent issued by the Government to Stone, the defendant. The question of the jurisdiction of the court to entertain such a bill, which was denied by counsel for Stone, was discussed at considerable length in their brief, and in the argument of counsel for the United States the language of *Chief Justice* Kent, in *Jackson* v. *Lawton*, 10 Johns. 24, was cited to the following effect: "The English practice of suing out a *scire facias* by the first patentee may have grown out of the rights of the prerogative, and it ceases to be applicable with us. In addition to the remedy by *scire facias*, etc., there is another by bill in the equity side of the Court of Chancery. [365] Such a bill was sustained in the case of *The Attorney-General* v. *Vernon*, 1 Vern. 277, to set aside letters patent obtained by fraud, and they were set aside by a decree."

This extract from the brief of counsel in the *Stone Case* is cited to show that the attention of the court was turned to this question, and the language of the opinion, as delivered by *Mr. Justice* Grier, expresses in sententious terms the result arrived at by this court in regard to this entire question. It is as follows: "A patent is the highest evidence of title, and is conclusive as against the Government, and all claiming under junior patents or titles, until it is set aside or annulled by some judicial tribunal. In England this was originally done by *scire facias*, but a bill in chancery is found a more convenient remedy. Nor is fraud in the patentee the only ground upon which a bill will be sustained. Patents are sometimes issued unadvisedly or by mistake, where the officer has no authority in law to grant them, or where another party has a higher equity and should have received the patent. In such cases courts of law will pronounce them void. The patent is but evidence of a grant, and the officer who issues it acts ministerially and not judicially. If he issues a patent for land reserved from sale by law, such patent is void for want of authority. But one officer of the Land Office is not competent to cancel or annul the act of his predecessor. That is a judicial act, and requires the judgment of a court. It is contended here, by the counsel of the United States, that the land for which a patent was granted to the appellant was reserved from sale for the use of the Government, and, consequently, that the patent is void. And although no fraud is charged in the bill, we have no doubt that such a proceeding in chancery is the proper remedy, and that if the allegations of the bill are supported, the decree of the court below canceling the patent should be affirmed."

We cite thus fully from this case because it is the first one in which the questions now before us were fully considered and clearly decided. In the previous case of *United States* v. *Hughes*, 52 U. S. 11 How. 552 [13: 809], the same question came before the court on demurrer. The court held that the demurrer must be overruled, saying that it cannot "be con- [366] ceived why the Government should stand on a different footing from any other proprietor." The case afterwards came again before this court, and is reported in 71 U. S. 4 Wall. 232 [18: 303], later than the *Stone Case*. The court then said: "It was the plain duty of the United States to seek to vacate and annul the instrument, to the end that their previous engagement might be fulfilled by the transfer of a clear title, the only one intended for the purchaser by the Act of Congress."

In the case of *Moore* v. *Robbins*, 96 U. S. 530 [24: 848], this court said, in a suit between private citizens, and speaking of the issue of patents by the Government: "If fraud, mistake, error or wrong has been done, the courts of justice present the only remedy. These courts are as open to the United States to sue for the cancellation of the deed or reconveyance of the land as to individuals; and if the Government is the party injured this is the proper course."

In *Moffat* v. *United States*, 112 U. S. 24 [28: 623], a decree of the circuit court setting aside a patent as having been obtained by fraud was affirmed; and the same doctrine was reasserted in *United States* v. *Minor*, 114 U. S. 233 [29: 110]. Still later, in the case of *Colorado Coal & Iron Co.* v. *United States*, 123 U. S. 307 [31: 182], the right of the court, by a proceeding in equity at the instance of the Attorney-General and in the name of the United States, to set aside a patent for land, was fully recognized, and the language used in the case of *United States* v. *Minor*, *supra*, was cited to the following effect: "Where the patent is the result of nothing but fraud and perjury, it is enough to hold that it conveys the legal title, and it would be going quite too far to say that it cannot be assailed by a proceeding in equity and set aside as void, if the fraud is proved and there are no innocent holders for value."

The whole question was reviewed at great length by this court at its last term in the case of *United States* v. *San Jacinto Tin Co.*, 125 U. S. 273 [31: 747], when all the cases above mentioned, and others, were cited and commented upon. The matter is thus summed up in the opinion of the court: "But we are of [367] opinion that since the right of the Government of the United States to institute such a suit depends upon the same general principles which would authorize a private citizen to apply to a court of justice for relief against an instrument obtained from him by fraud or deceit, or any of those other practices which are admitted to justify a court in granting relief, the Government must show that, like the private individual, it has such an interest in the relief sought as entitles it to move in the matter. If it be a question of property, a case must be made in which the court can afford a remedy in regard to that property; if it be a question of fraud, which would render the instrument void, the fraud must operate to the prejudice of the United States; and if it is apparent that the suit is brought for the benefit of some third party, and that the United States has no pecuniary interest in the remedy sought, and is

under no obligation to the party who will be benefited to sustain an action for his use; in short, if there does not appear any obligation on the part of the United States to the public, or to any individual, or any interest of its own, it can no more sustain such an action than any private person could under similar circumstances."

This language is construed by counsel for the appellee in this case to limit the relief granted at the instance of the United States to cases in which it has a direct pecuniary interest. But it is not susceptible of such construction. It was evidently in the mind of the court that the case before it was one where the property right to the land in controversy was the matter of importance, but it was careful to say that the cases in which the instrumentality of the court cannot thus be used are those where the United States has no pecuniary interest in the remedy sought, and is also under no obligation to the party who will be benefited to sustain an action for his use, and also where it does not appear that any obligation existed on the part of the United States to the public or to any individual. The essence of the right of the United States to interfere in the present case is its obligation to protect the public from the monopoly of the patent which was procured by fraud, and it would be difficult to find language more aptly used to include this in the [368] class of cases which are not excluded from the jurisdiction of the court by want of interest in the Government of the United States.

It is insisted that these decisions have reference exclusively to patents for land, and that they are not applicable to patents for inventions and discoveries. The argument very largely urged for that view is the one just stated, that in the cases which had reference to patents for land the pecuniary interest of the United States was the foundation of the jurisdiction. This, however, is repelled by the language just cited, and by the fact that in more than one of the the cases, notably in *United States* v. *Hughes*, *supra*, the right of the Government to sustain the suit was based upon its legal or moral obligation to give a good title to another party who had a prior and a better claim to the land, but whose right was obstructed by the patent issued by the United States.

The case of *Mowry* v. *Whitney*, 81 U. S. 14 Wall. 434 [20:858], was a bill in chancery brought by Mowry, in the Circuit Court for the Eastern District of Pennsylvania, against Whitney, charging that Whitney's patent for a mode of annealing and cooling cast-iron car wheels, and an extension of it made by the Patent Office had been procured by fraud and false swearing, and praying that it and the extension might be declared void and of no effect. To this bill Whitney demurred. The demurrer was sustained by the court below, and from the decree dismissing the bill Mowry took an appeal to this court, where it was said "that the complainant could not, in his own right, sustain such a suit." In giving its reasons for this, the court said: "We are of opinion that no one but the Government, either in its own name or the name of its appropriate officer, or by some form of proceeding which gives official assurance of the sanction of the proper authority, can institute judicial proceedings for the purpose of vacating or rescinding the patent which the Government has issued to an individual, except in the cases provided for in section sixteen of the Act of July 4, 1836. The ancient mode of doing this in the English courts was by *scire facias*, and three classes of cases are laid down in which this may be done." One of these is, "When the King has granted a thing by false suggestion, [369] he may by *scire facias* repeal his own grant. (Citing 4 Inst. 88; Dyer, 197-8, and 276, 279.) . . . The *scire facias* to repeal a patent was brought in chancery where the patent was of record. And though in this country the writ of *scire facias* is not in use as a chancery proceeding, the nature of the chancery jurisdiction and its mode of proceeding have established it as the appropriate tribunal for the annulling of a grant or patent from the Government. This is settled, so far as this court is concerned, by the case of *United States* v. *Stone*, 69 U. S. 2 Wall. 525 [17:765]." The opinion then refers to *Attorney-General* v. *Jackson* and *Jackson* v. *Lawton*, already cited.

It is said that this language of the court is *obiter*, and does not decide directly that a suit can be brought in chancery to cancel or annul a patent issued by the United States Government for an invention. It is true that what the court was called upon to decide was that a private citizen could not bring such suit; but evidently the reason given for it must be held to establish the principle upon which the court acted, and that reason was that the private citizen could not do it because the right lay with the Government. The duty and the right of the Government to bring an action which would end in the destruction of the patent, and which would thus protect everybody against the asserted monopoly of it, was the reason why the private citizen could not for himself bring such a suit.

Another reason given by the court is that the fraud, if one exists, must have been practiced on the Government, which, as the party injured, is the appropriate party to seek relief, and that a suit by an individual could only be conclusive in result as between the patentee and the party suing, and the patent would remain a valid instrument as to all others; while, if the action was brought by the Government, and a decree had to annul the patent, this would be conclusive in all suits founded on the patent. Other reasons were given, showing that the United States was the appropriate party to bring such a suit, and that the Circuit Court of the United States, sitting in equity, was the proper tribunal in which to bring it; all tending to show that the reason why a pri- [370] vate citizen could not have such relief was that it belonged to the Government.

The United States, by issuing the patents which are here sought to be annulled, has taken from the public rights of immense value and bestowed them upon the patentee. In this respect the Government and its officers are acting as the agents of the people, and have, under the authority of law vested in them, taken from the people this valuable privilege and conferred it as an exclusive right upon the patentee. This is property, property of a value so large that nobody has been able to estimate it. In a former argument in this court

it was said to be worth more than twenty-five millions of dollars. This has been taken from the people, from the public, and made the private property of the patentee by the action of one of the departments of the Government acting under the forms of law, but deceived and misled, as the bill alleges, by the patentee. That the Government, authorized both by the Constitution and the statutes to bring suits at law and in equity, should find it to be its duty to correct this evil, to recall these patents, to get a remedy for this fraud, is so clear that it needs no argument; and we think we have demonstrated that the proper remedy is the one adopted by the Government in this case.

But conceding that, in regard to patents for land, and in reference to other transactions, in which the Government is a party, the courts of equity have jurisdiction to correct mistakes, to give relief for frauds, and to cancel contracts and other important instruments, it is said that in reference to patents for inventions and discoveries the Acts of Congress have provided another remedy for frauds committed in obtaining them, and for the very class of frauds set up in this bill. Counsel therefore contend that this supersedes all others. This remedy is found in the following provision of the Revised Statutes:

"Sec. 4920. In any action for infringement the defendant may plead the general issue, and having given notice in writing to the plaintiff or his attorney thirty days before, may prove on trial any one or more of the following special matters:

[371] "First. That for the purpose of deceiving the public the description and specification filed by the patentee in the Patent Office was made to contain less than the whole truth relative to his invention or discovery, or more than is necessary to produce the desired effect; or,

"Second. That he had surreptitiously or unjustly obtained the patent for that which was in fact invented by another, who was using reasonable diligence in adapting and perfecting the same; or,

"Third. That it had been patented or described in some printed publication prior to his supposed invention or discovery thereof; or,

"Fourth. That he was not the original and first inventor or discoverer of any material and substantial part of the thing patented; or,

"Fifth. That it had been in public use or on sale in this country for more than two years before his application for a patent, or had been abandoned to the public."

Prior to the year 1836, from the earliest enactments of patent law, certain provisions had been incorporated in that law authorizing a *scire facias* to issue to declare a patent void for want of invention by the patentee, and other matters, which, though instituted by a private individual, was under the control of the official attorneys of the Government. This was repealed by the Act of 1836, which may be said to be the first real and successful organization of the Patent Office and the system of patent law in the United States. The law on this subject was revised by the Act of Congress of July 8, 1870 (16 U. S. Stats. at L. 198), and the Revised Statutes of the United States, from which section 4920 is quoted, contain the language applicable to this subject.

The Statute of 1836 repealed the provision for a *scire facias*. It is now argued that the repeal of this provision, together with the enactment of the provision of section 4920, show that the only remedy for the improvident issuing of a patent is to be found in the language of that section. These clauses, while they do not in any general form declare that a person sued for an infringement of a patent may set up as a defense that it was procured by fraud or deceit, do in effect specify various acts of fraud which the infringer may rely upon as a defense to a suit against him founded upon that instrument. It is, therefore, urged that because each individual affected by the monopoly of the patent is at liberty, when he is sued for using it without license or authority, to set up these defenses, the remedy which the United States has under the principles we have attempted to sustain, is superseded by that fact. But a consideration of the nature and effect of these different modes of proceeding in regard to the patent will show that no such purpose can be inferred from these clauses of the Act of Congress. [372]

In the first place, the right given to the infringer to make this defense is a right given to him personally, and to him alone, and the effect of a successful defense of this character by one infringer is simply to establish the fact that, as between him and the patentee, no right of action exists for the reasons set up in such defense. But the patentee is not prevented by any such decision from suing a hundred other infringers, if so many there be, and putting each of them to an expensive defense, in which they all, or some of them, may be defeated and compelled to pay, because they are not in possession of the evidence on which the other infringer succeeded in establishing his defense. On the other hand, the suit of the Government, if successful, declares the patent void, sets it aside as of no force, vacates it or recalls it, and puts an end to all suits which the patentee can bring against anybody. It opens to the entire world the use of the invention or discovery in regard to which the patentee had asserted a monopoly.

This broad and conclusive effect of a decree of the court, in a suit of that character brought by the United States, is so widely different, so much more beneficial, and is pursued under circumstances so much more likely to secure complete justice, than any defense which can be made by an individual infringer, that it is impossible to suppose that Congress, in granting this right to the individual, intended to supersede or take away the more enlarged remedy of the Government. Some of these specifications of grounds of defense are not such as would ordinarily be sufficient in a court of equity to set aside the patent, as "that it had been in public use or on sale in this country for more than two years," or "that it had been patented or described in some printed publication prior to his supposed invention or discovery thereof." It is unnecessary to decide whether these grounds now would be sufficient cause for setting aside a patent in a suit by the United States; but they are not of that general [373]

character which would give a court of equity jurisdiction to do that, except as it may be said they are now parts of the general system of the patent law.

A question almost identical with this was made in the House of Peers in the case of *The King* v. *Butler*, 3 Lev. 220, as to whether the judgment obtained by the King in the court of chancery repealed the grant to Butler. It was answered by the judges to some of the objections that "It was not unusual for the King to have his remedy, as well as the subject also; as for batteries, trespasses, etc., the King has a remedy by information and indictment, and the party grieved by his action."

The argument need not be further extended. There is nothing in these provisions expressing an intention of limiting the power of the Government of the United States to get rid of a patent obtained from it by fraud and deceit. And although the Legislature may have given to private individuals a more limited form of relief, by way of defense to an action by the patentee, we think the argument that this was intended to supersede the affirmative relief to which the United States is entitled, to obtain a cancellation or vacation of an instrument obtained from it by fraud, an instrument which affects the whole public, whose protection from such a fraud is eminently the duty of the United States, is not sound.

The decree of the Circuit Court dismissing the bill of plaintiff is reversed, and the case remanded to that court, with directions to overrule the demurrer, with leave to defendants to plead or answer, or both, within a time to be fixed by that court.

Mr. Justice **Gray** was not present at the argument and took no part in the decision of this case.

254] UNITED STATES, *Appt.*,

v.

SIMON COOK.

(See S. C. Reporter's ed. 254-257.)

Cadet-midshipman—claim for additional pay.

1. A cadet midshipman at the naval academy, appointed June 6, 1873, who graduated at the naval academy June 18, 1879, and was appointed ensign November 15, 1881, is entitled to additional pay under the Act of March 3, 1883, chap. 97, 22 Stat. at L. 473.

2. Calling a student a cadet midshipman, in pursuance of the Act of July 15, 1870, instead of a midshipman, without changing his position or his duties, does not make his status different from what it was before. A midshipman is an officer.

[No. 1163.]

Submitted Nov. 5, 1888. Decided Nov. 19, 1888.

APPEAL from a judgment of the Court of Claims, in favor of the appellee, a cadet midshipman in the navy for additional pay under the Act of March 3, 1883. *Affirmed.*

The facts are stated in the opinion.

Messrs. **A. H. Garland,** *Atty-Gen.*, **Robert A. Howard,** *Assist. Atty-Gen.* and **F. P. Dewees,** *Assist. Atty.*, for appellant.

Messrs. **Robert B. Lines** and **John Paul Jones,** for appellee.

Mr. Justice **Bradley** delivered the opinion of the court:

This is an appeal from a judgment rendered by the court of claims against the United States in favor of Simon Cook, for the sum of $1,000. Cook was appointed a cadet midshipman in the navy, June 6, 1873, graduated at the naval academy June 18, 1879, and was appointed ensign November 15, 1881. He claims additional pay under the Act of March 3, 1883, chap. 97 (22 Stat. at L. 473), which is as follows:

"And all officers of the navy shall be credited [255] with the actual time they may have served as officers or enlisted men in the regular or volunteer army or navy, or both, and shall receive all the benefits of such actual service, in all respects, in the same manner as if all said service had been continuous, and in the regular navy, in the lowest grade having graduated pay held by such officer since last entering the service."

If entitled to credit in his grade of ensign with the time of his service as cadet midshipman, there is still due the claimant the sum of $1,000. The claim of the appellants is, that, in the sense of the above cited Act, the appellee did not *serve* either as an officer or enlisted man, while a student at the naval academy.

After the 12th section of the Act of July 15, 1870 (16 Stat. at L. 334), students at the naval academy were to be styled "cadet midshipmen," and after graduation were to be appointed midshipmen and promoted to the grade of ensign, as vacancies might occur. Prior to that Act students at the naval academy were styled midshipmen. The form of appointment was the same before and after the Act; in both cases it was signed by the Secretary of the Navy, by direction of the President, and the position and duties were precisely the same.

In the case of *United States* v. *Baker*, 125 U. S. 645 [31:824], it was held that Baker, who was appointed prior to the Act of July 15, 1870, a midshipman at the naval academy, but who did not graduate until after the Act had been passed, was entitled to pay, under the Act of March 3, 1883, from the time of his entrance at the naval academy. It is difficult to see how the present case can be distinguished from that. Calling the student a cadet midshipman instead of a midshipman, without changing his position or his duties, does not make his status different from what it was before. In the *Baker Case*, speaking by *Mr. Justice* Blatchford, this court said: "But even if §12 of the Act of 1870 applies so far to those who were then students in the naval academy, that they were thereafter to be styled cadet midshipmen, yet they were still to discharge the same duties as before, and be subject to the same naval discipline and control as before, and to receive the same pay as before. We see nothing in the Act of 1870 [256] to exclude the claimant from the position which he occupied prior to the passage of that Act as a member of a grade in the active list of line officers of the navy, so far as respected his service at the naval academy after the date of the passage of that Act, whether he was thereafter to be styled a cadet midshipman or continue to be styled a midshipman."

Again the court said: "It is impossible not to conclude that the claimant continued to be after the passage of the Act of 1870, as he was prior to its passage, an officer of the navy on

the active list, and serving as such an officer by virtue of his having been appointed a midshipman and continuing to be a student in the naval academy, even though he might have been properly styled after the passage of the Act of 1870 a cadet midshipman."

We think that the views thus expressed in the *Baker Case* were sound, and we adhere to them.

That a midshipman is an officer has been understood ever since there was a navy. He is not one of the common seamen. His name indicates a middle position between that of a superior officer and that of the common seaman. (Imp. Dict.) Harris, in the early part of last century, and Johnson in the middle of it, defined "Midshipmen" as "officers aboard a ship." Cooper, in his History of the Navy of the United States, speaking of the Colonial period in the middle of last century, says: "About this time, it also became a practice among the gentry of the American Provinces to cause their sons to be entered as midshipmen in the royal navy." (p. 84.) The first Act of Congress under the Constitution establishing a navy, after naming the superior officers to be employed on each ship, designates the following "warrant officers," to be appointed by the President, namely: "One sailing master, one boatswain, one gunner, one sailmaker, one carpenter, and eight midshipmen;" and these are placed before "petty officers," mentioned in the same connection. Act of March 27, 1794, 1 Stat. at L. 350. If the law designates a cadet as a midshipman, the designation is an official one. The qualification of cadet midshipman is used [257] for the sake of distinction, to distinguish one kind of midshipman from another, a midshipman at school from a midshipman aboard ship.

In the case of *United States* v. *Hendee*, 124 U. S. 309 [31:465], it appeared that Hendee was a paymaster, and had been promoted from a paymaster's clerk, and this court, by *Mr. Justice* Miller, said: "The claimant here is an officer of the navy, and is, therefore, to be credited with the actual time that he served as an officer or enlisted man in the regular or volunteer army or navy, or both. We think the words 'officers or enlisted men in the regular or volunteeer army or navy, or both,' was intended to include all men regularly in service in the army or navy, and that the expression 'officers or enlisted men' is not to be construed distributively as requiring that a person should be an enlisted man, or an officer nominated and appointed by the President, or by the head of a department, but that it was meant to include all men in service, either by enlistment or regular appointment, in the army or navy. We are of opinion that the word 'officer' is used in that statute in the more general sense which would include a paymaster's clerk; that this was the intention of Congress in its enactment, and that the collation of the words means this, especially when it is added that they 'shall receive all the benefits of such actual service in all respects and in the same manner as if said service had been continuous and in the regular navy.'"

The decision in the *Cases of Hendee* and *Baker* render it unnecessary to go over again the history of the legislation that bears on the subject. *The decree of the Court of Claims is affirmed.*

UNITED STATES *Appt.*, [230]
v.
JOHN F. KNOX.

(See S. C. Reporter's ed. 230-235).

United States Commissioner, fees of—presentation of claim, auditing—mandamus.

1. A United States Commissioner who kept a docket, by direction of the court appointing him, and entered therein the proceedings in criminal cases heard and decided by him, is entitled to the same fees allowed to clerks of courts by section 828, R. S.

2. Where the judge of the district court refused to receive or to act upon his claim, this amounts to a presentation of it by the claimant to the court.

3. The presentation of the claim to the auditing officers of the treasury department and its disallowance by them, was not necessary to give the court of claims jurisdiction thereof.

4. Such claimant was not compelled to resort to a writ of mandamus against the circuit court to compel it to act upon his claim before bringing his action in the court of claims.

[No. 1209].

Submitted Nov. 5, 1888. Decided Nov. 19, 1888.

APPEAL from a judgment of the Court of Claims, for services by appellee as Commissioner of the United States Circuit Court. *Affirmed.*

The facts are stated in the opinion.

Messrs. **A. H. Garland,** *Atty-Gen.*, **Robert A. Howard,** *Assist. Atty-Gen.*, and **F. P. Dewees,** *Assist. Atty.*, for appellant:

The questions raised were held to have been substantially decided in *Turner's Case*, 19 Ct. Cl. 629; *Wallace's Case*, 20 Ct. Cl. 273; *Water's Case*, 21 Ct. Cl. 30.

The questions arising in the case at bar were not at issue in either or any of such cases.

Before any such fees shall be allowed by any officer of the treasury the provisions of the Act of 1875 must be complied with.

Clyde's Case, 80 U. S. 13 Wall. 38 (20:479); *Kaufman's Case*, 96 U. S. 571 (24:792); *Ravesies* v. *U. S.* 21 Ct. Cl. 243; *Boughton's Case*, 12 Ct. Cl. 333; *Real Estate Savings Bank's Case*, 16 Ct. Cl. 335, 104 U. S. 728 (26: 908); *Sybrandt's Case*, 19 Ct. Cl. 461; *Ramsey's Case*, 14 Ct. Cl. 367.

The office of a writ of mandamus is to compel the performance of a plain and positive duty.

Ex parte Cutting, 94 U. S. 14 (24: 49).

It is the only adequate mode of relief when an inferior court refuses to act.

N. Y. L. & F. Ins. Co. v. *Wilson*, 33 U. S. 8 Pet. 291 (8: 949).

It may be issued to compel a court to proceed with a case.

Knickerbocker Ins. Co. v. *Comstock*, 83 U. S. 16 Wall. 258 (21: 493).

Mr. **George A. King,** for appellee:

That the claimant in this case made his docket and indexes in the same form as that used in *U. S.* v. *Wallace*, 116 U. S. 398 (29:675), is not disputed by appellant.

The only objection made to a recovery is that the account has never been approved by a circuit or district court as required by the Act of February 22, 1875.

Mandamus is only granted where no other legal remedy exists.

Kendall v. *U. S.* 37 U. S. 12 Pet. 524 (9:1181); *Union Pac. R. Co.* v. *Hall*, 91 U. S. 343 (23: 428); *Ex parte Cutting*, 94 U. S. 14 (24: 49).

It is never granted when the party aggrieved has another adequate remedy.

Secretary v. *McGarrahan*, 76 U. S. 9 Wall. 298 (19: 579); *Ex parte Va. Comrs.* 112 U. S. 177 (28: 691); *Comr. of Patents* v. *Whiteley*, 71 U. S. 4 Wall. 522 (18: 335).

Neither this court, nor the circuit and district courts, nor any state court, has any power whatever to issue writs of mandamus to officers of the United States.

Marbury v. *Madison*, 5 U. S. 1 Cranch, 137 (2: 60); *McIntyre* v. *Wood*, 11 U. S. 7 Cranch, 504 (3: 420); *M'Clung* v. *Silliman*, 19 U. S. 6 Wheat. 598 (5: 340).

The only court that has that power is the Supreme Court of the District of Columbia, and the power of that court can be exercised only upon such officers of the United States as have their official residence within the District, to which the jurisdiction of that court is territorially limited.

Kendall v. *U. S.* 37 U. S. 12 Pet. 524 (9: 1181); *U. S.* v. *Schurz*, 102 U. S. 378 (26: 167); *Butterworth* v. *Hill*, 114 U. S. 128 (29: 119).

The writ would not be granted to compel the circuit or district court to proceed to a decision in a matter in which its action would be final, and from which no appeal would lie to this court.

Comr. of Patents v. *Whiteley*, 4 Wall, 71 U. S. 522, 533, 534 (18: 335, 338); *Knickerbocker Ins. Co.* v. *Comstock*, 83 U. S. 16 Wall. 258 (21: 493).

When an officer of the United States refuses to perform some plain ministerial act at the instance of a party entitled to its performance, the aggrieved party will have his option to apply for a mandamus or to bring his action at law against the officer.

Kendall v. *Stokes*, 44 U. S. 3 How. 87, 99 (11: 506, 512).

When the officers of the United States arbitrarily refuse to take the steps enjoined upon them by law to enable the claimant to secure his money from the treasury, such a claimant, provided he has been diligent in performing all that the law requires of him, may bring his action in the court of claims, without proceeding against the officers, by mandamus or otherwise, to compel them to perform the duties imposed upon them by law.

Campbell v. *U. S.* 107 U. S. 407 (27: 592).

No power, not judicial in its character, can be conferred upon the Circuit Courts of the United States by Congress.

Hayburn's Case, 2 U. S. 2 Dall. 410 (1: 436); *U. S.* v. *Ferreira*, 54 U. S. 13 How. 40 (14: 42); *U. S.* v. *Todd*, 54 U. S. 13 How. 52, note (14: 47); *Gordon* v. *U. S.* 69 U. S. 2 Wall. 561 (17: 921); *U. S.* v. *Jones*, 119 U. S. 477 (30: 440); *Ex parte Gans*, 17 Fed. Rep. 471, 472, 473.

Their decisions cannot be revised and corrected by a clerk in an auditor's or comptroller's office.

Crescent City Live Stock Co. v. *Butchers' Union*, 120 U. S. 141, 157 (30: 614, 621).

It was competent for the commissioner, without first presenting his claim for docket fees to the Treasury Department, to sue upon it at once in the court of claims.

U. S. v. *Kaufman*, 96 U. S. 571 (24: 792); *Clyde* v. *U. S.* 80 U. S. 13 Wall. 38 (20: 479).

Mr. Justice **Miller** delivered the opinion of the court: [231]

This is an appeal from the Court of Claims brought by the United States to reverse a judgment obtained by John F. Knox, the appellee, for the sum of $196 for services as a Commissioner of the Circuit Court of the United States for the Northern District of Texas.

These services were the keeping of a docket and making entries therein in regard to parties brought before him charged with violations of the laws of the United States. Two objections were made in the court below, and are reproduced here, to the claimant's right to recover in the Court of Claims. The first of these is that no approval or disapproval of the claim was made by the circuit or district court. This proposition is founded on the first section of the Act of February 22, 1875 (18 U. S. Stat. at L. 333), which reads as follows:

"That before any bill of costs shall be taxed by any judge or other officer, or any account payable out of the money of the United States shall be allowed by any officer of the treasury, in favor of clerks, marshals, or district attorneys, the party claiming such account shall render the same, with the vouchers and items thereof, to a United States Circuit or District Court, and, in presence of the district attorney or his sworn assistant, whose presence shall be noted on the record, prove in open court, to the satisfaction of the court, by his own oath or that of other persons having knowledge of the facts, to be attached to such account, that the services therein charged have been actually and necessarily performed as therein stated; and that the disbursements charged have been fully paid in lawful money; and the court shall thereupon cause to be entered of record an order approving or disapproving the account, as may be according to law and just. United [232] States Commissioners shall forward their accounts, duly verified by oath, to the district attorneys of their respective districts, by whom they shall be submitted for approval in open court, and the court shall pass upon the same in the manner aforesaid. Accounts and vouchers of clerks, marshals, and district attorneys shall be made in duplicate, to be marked respectively 'original' and 'duplicate.' And it shall be the duty of the clerk to forward the original accounts and vouchers of the officers above specified, when approved, to the proper accounting officers of the treasury, and to retain in his office the duplicates, where they shall be open to public inspection at all times. Nothing contained in this Act shall be deemed in any wise to diminish or affect the right of revision of the accounts to which this Act applies, by the accounting officers of the treasury, as exercised under the laws now in force."

It will be observed that this section makes a somewhat different provision as to the course to be pursued by clerks, marshals and district attorneys who have accounts against the Government, and that which is to be taken by United States Commissioners. The former shall render their accounts, with the vouchers and items thereof, to a United States Circuit or District Court, and in open court prove them in the presence of the district attorney or his sworn assistant, whose presence shall be noted

on the record, "and the court shall thereupon cause to be entered of record an order approving or disapproving the account, as may be according to law and just." As to commissioners, it is provided that they "shall forward their accounts, duly verified by oath, to the district attorneys of their respective districts, by whom they shall be submitted for approval in open court, and the court shall pass upon the same in the manner aforesaid."

The same section also requires "that before any bill of costs shall be taxed by any judge or other officer, or any account payable out of the money of the United States shall be allowed by any officer of the treasury" in favor of these parties, the proceedings just stated shall be had. It is also provided that "Nothing contained in this Act shall be deemed in any wise to diminish or affect the right of revision of the accounts to which this Act applies by the accounting officers of the treasury, as exercised under the laws now in force."

[233]

The findings of fact, made by the court in this case, show that Knox did keep the docket and render the services charged in his petition, to the amount $390; but the court of claims disallowed all but $196 of it, as being barred by the Statute of Limitations. That court also finds that the claimant made out and verified by oath his account of fees for keeping said docket, and that he sent it to the United States District Attorney to be presented to the court. It further appears by correspondence between the claimant and the clerk of the court and the district attorney that the latter offered to present the account to the judge at Dallas, but that the judge refused to receive or approve it, suggesting that the district attorney had better call for the books and examine them himself, and see if the account was correct.

Soon after the claimant took his books to Waco, and left them with the district attorney for examination. That officer thereafter returned the books to him, and informed him that the judge would not act upon the account. There is a term of the district court held at Dallas and another at Waco for the Northern District of Texas; and we take this statement of what occurred to amount to a presentation by the claimant of his account through the district attorney to the court, and an absolute refusal by the court to act upon the claim.

Section 846 of the Revised Statutes declares as follows: "The accounts of district attorneys, clerks, marshals and commissioners of circuit courts shall be examined and certified by the district judge of the district for which they are appointed, before they are presented to the accounting officers of the Treasury Department for settlement. They shall then be subject to revision upon their merits by said accounting officers, as in case of other public accounts."

It was decided in *United States* v. *Wallace*, 116 U. S. 398 [29:675], that a United States Commissioner who kept a docket, by direction of the court appointing him, and entered therein the proceedings in criminal cases heard and decided by him, is entitled to the same fees allowed to clerks of courts by section 828 of the Revised Statutes for the keeping of their dockets.

[234]

It is evident from the language of section 846, and that of the Act of 1875, above cited, that the Treasury Department has a right to require some action by the district attorney and the court, before it will allow or consider a claim in such a case as this.

The second objection made by counsel for the United States is that the claim should have been presented at the Treasury Department and have been disallowed by the accounting officers. This question was considered in *Clyde* v. *United States*, 80 U. S. 13 Wall. 38 [20:479], and we understand the court to have decided in substance that the action of the Auditing Department, either in allowing or rejecting such a claim, was not an essential prerequisite to the jurisdiction of the court of claims to hear it. In that case it appeared that the court of claims had refused to consider a claim against the United States presented to it because the claimant had not complied with a rule of that court which required that the party should have first gone to the department which might have entertained it, before he was permitted to proceed in that tribunal. But this court held that such a rule was "an additional restriction to the exercise of jurisdiction by that court. It required the claimant to do what the Acts giving the court jurisdiction did not require him to do, before it would assume jurisdiction of this case." The rule was, therefore, declared to be void, and the court of claims was directed to proceed with the consideration of the case.

The presentation, therefore, of the present case to the officers of the Government charged with the auditing of such accounts in the Treasury Department was not necessary to give the court of claims jurisdiction, and it would have been a useless step because the statute expressly says that the court shall first "cause to be entered of record an order approving or disapproving the account, as may be according to law and just."

No provision is made for a refusal by the court to act upon a claim, and the most forcible argument now made on behalf of the Government against the right of the Court of Claims to take jurisdiction of this case is that no such order was made by the Circuit or District Court, and that the proper remedy for the claimant is a proceeding in mandamus to compel the Circuit Court to act upon the account. [235]

We do not know what may have been the circumstances which induced that court to decline to act upon this claim, but we are not prepared to say that such a writ is the proper remedy for the claimant to resort to here. If there were no other this might be so, but the attempt to proceed by mandamus would raise the question, always a troublesome one, whether it is a part of the judicial function to take part in auditing the accounts against the Government, or preparing them for submission to the auditing officers. But as we feel well assured that the claimant, who has done everything in his power to secure action upon his account by the district attorney and the court, and who has a just claim against the Government for services rendered under the Act of Congress, has a remedy in the Court of Claims, we do not see why he should be compelled first to resort to a writ of mandamus against the Circuit Court. This remedy, always an unusual one and out of the ordinary course of proceeding, would be attended in the case before us with delay and

embarrassment. It is not by any means so efficient nor so speedy as an action in the Court of Claims. If he should succeed after trouble, delay, and expense, in procuring action by the local court, which might be either an approval or a disapproval of his claim, he would still have to go to the Auditing Department, in which the action of the court is only advisory, or he might sue in the Court of Claims as shown in the case of *Clyde* v. *United States*. 80 U. S. 13 Wall. 38 [20:479].

We are, therefore, of opinion that the Court of Claims had jurisdiction of the case, *and its judgment is affirmed.*

403]

HARRIET BROWN, *Appt.*,
v.
THE GUARANTEE TRUST AND SAFE DEPOSIT COMPANY.

(See S. C. Reporter's ed. 403-416.)

Multifariousness—parties in equity—different causes—time, when of the essence of a contract—when contract not abandoned.

1. In an equity suit, where the case against one of the defendants is so entire as to be incapable of being prosecuted in several suits, and another defendant is a necessary party to some portion of the case stated, the objection of multifariousness cannot prevail.
2. It is not indispensable that all the parties should have an interest in all the matters contained in the suit; it will be sufficient if each party has an interest in some material matters in the suit, and they are connected with the others.
3. To support the objection of multifariousness, because the bill contains different causes of suit against the same person, two things must concur: first, the grounds of suit must be different; second, each ground must be sufficient as stated to sustain a bill.
4. Time may be made of the essence of the contract; but it must affirmatively appear that the parties regarded time as an essential element in their agreement, or a court of equity will not so regard it.
5. Where there was an agreement for the postponement of the payment and to pay interest on the purchase money, acceptance of a partial payment and demand for performance shows that the contract had not been abandoned.

[No. 20.]

Submitted April 25, 1888. Decided Nov. 19, 1888.

APPEAL from a decree of the Circuit Court of the United States for the Northern District of Illinois, for specific performance of a contract by appellant, etc. *Affirmed.*

[404] Statement by *Mr. Justice* **Lamar**:

This litigation arose from a creditors' bill, filed in one of the courts of Illinois, by Edward R. Knowlton against the City of Joliet Water Works Company, Jesse W. Starr and Harriet Brown, for the enforcement of a judgment against the first named two defendants; for the appointment of a receiver of the property used by that company in its business; and for an accounting with the remaining defendant, Harriet Brown, who, it was alleged, asserted a vendor's lien upon some of the property of the Water Works Company, sold by her to Starr, and by him to that company.

The Guarantee Trust and Safe Deposit Company, a Corporation of Pennsylvania, being made a defendant, the cause, upon its motion, was removed to the United States Circuit Court for the Northern District of Illinois, upon the ground of the diverse citizenship of the parties. Subsequently that Company filed its cross bill for a foreclosure of a mortgage held by it upon the property of the Water Works Company, and for specific performance by Harriet Brown of her contract of sale to Starr.

The cross bill alleges, in substance, that by certain instruments in writing, bearing date, respectively, the 15th and 17th of June, and the 9th of October, 1880, Starr undertook with the City of Joliet to construct and maintain a system of water works for that city and its citizens, in consideration of which it agreed to grant to him and his successors certain franchises, rights and rentals connected therewith; that on the 4th of October, 1880, he entered into a written agreement with Harriet Brown, by [405] which, in consideration of $1,000 to be paid to her, she agreed to convey to him a certain parcel of land in Joliet; that subsequently he entered into a verbal agreement with her for the purchase of other parcels of land, making in all 9.60 acres, for which he was to pay a total price of $4,800; that on the 10th of December thereafter, Mrs. Brown, by warranty deed, conveyed all of said parcels to Starr, placing the deed in the hands of one Hobbs, for delivery to Starr, upon the payment of the balance of the purchase money; and that on the 3d of November Starr paid to her, on that purchase, the sum of $500, and on the 17th of February, 1881, the further sum of $1,000.

It was also alleged, in the cross bill, that immediately after said agreements, and with full knowledge and consent of Mrs. Brown, Starr took actual and open possession of all the premises so purchased, and immediately began to make permanent and expensive improvements thereon for water-works purposes; that he and his assignee, hereinafter mentioned, continued to make such improvements at a cost of about $50,000, and remained in uninterrupted possession of the premises until they were delivered to the receiver appointed in this litigation; all this within the daily sight of Mrs. Brown, and without objection or molestation on her part; that to supplement his individual resources, which were insufficient to carry out his agreement with the city, Starr resorted to the plan of creating a corporation under the local laws of the State, and by means of its negotiable bonds and stocks raising money sufficient to complete said water works; and that to accomplish this purpose the City of Joliet Water Works Company was organized, with a capital stock of $200,000, of which amount Starr subscribed for $195,000 in his individual name.

It is further alleged in the cross bill that immediately upon the organization of that corporation, and on the 9th of December, 1880, Starr conveyed to it and its assigns his contracts with the City of Joliet, as well as the rights, franchises and property, real and personal, connected therewith, including the property purchased from Mrs. Brown, and agreed with the company to complete the system of water works contemplated by his contract with the [406] city, and deliver them to the company within a

reasonable time; that by the agreement last mentioned the company, Starr being a director and the principal manager, as well as the subcriber for all of its capital stock except $5,000, agreed to credit him forthwith with $195,000 on his subscription to its capital stock, and to deliver to him its bonds to the amount of $140,000, par value, and also to secure their payment by executing to the complainant in the cross bill a mortgage upon all the property, rights and franchises then owned, or thereafter to be acquired by it; that said bonds were accordingly delivered to Starr, and the mortgage was duly executed to the complainant in the cross bill; that after getting the bonds in his hands he forthwith placed them upon the market, and they are now held by a large number of persons and corporations; that the Water Works Company has made default in the payment of the interest coupons due on said bonds, and for more than four calendar months has continued to make default; and that, in obedience to the request made to it, according to the terms of the mortgage, by a majority in interest of the holders of bonds, the complainant in the cross bill, as trustee, files its cross bill for foreclosure. The bill still further avers that, in consequence of the assignment of Starr to the Water Works Company and the execution of said mortgage, the trustee was invested with the right, upon the payment of the purchase money due to Mrs. Brown, with interest thereon, to demand of her a specific performance of her agreement with Starr; that, as such mortgagee, the Guarantee Trust and Safe Deposit Company has always been willing to perform the agreement of Starr and to pay his vendor the residue of the purchase money due to her, with interest, on having a proper deed of conveyance, and is still ready and offers to pay the said residue; and that the Water Works Company is hopelessly insolvent, having no property, except that covered by the mortgage. The bill prays for a foreclosure and sale; that the proceeds thereof, after paying certain fees and current expenses, may be distributed in payment of said bonds and coupons; that an account may be taken of the amount due on account of the purchase [407] money due to Mrs. Brown from Starr; and that she be decreed to specifically perform her agreements to convey, so that said mortgage shall be a valid and first lien on the property.

Mrs. Brown filed a demurrer to the amended cross bill, alleging specifically that the same was multifarious. This demurrer having been overruled, she thereupon answered, averring her ignorance of the contract between Starr and the city; admitting the entering into the written contract with Starr, but alleging that it was thereafter wholly and completely abandoned by him, and that neither he nor any person or corporation had ever offered or claimed the right to carry out that contract; admitting that he afterwards verbally negotiated for the purchase of a larger tract of land, but alleging that said negotiation, as a contract was void, under the Statute of Frauds; that by its terms the payment of the entire purchase price was a condition precedent to the vesting in him of any title whatever; that the possession and the improvements were made without her consent, express or implied, and with his eyes open, and that she is entitled to the whole, augmented in value as it is by the improvements; that she had made a great many efforts to secure the balance of the purchase money due from Starr, but had been unsuccessful; that the negotiation and transaction, so far as he and those claiming under him or acting with him were concerned, had been a fraud upon her; that by reason of such failure on his part, and that of his successors and assigns, to comply with the terms of her contract with him, it had become broken and was void; and that the amended cross bill was multifarious: and praying the same benefit of her answer as if she had specifically demurred to the bill. To this answer a replication was filed.

Pursuant to a decree of the court, on the 31st of March, 1883, upon the petition of John D. Paige, receiver, all the property and effects of the Water Works Company which it obtained from Starr, and all the rights accruing to it by virtue of the contract with Mrs. Brown, were sold, and bought by Joseph H. Foster, of Portsmouth, N. H. On June 9, 1883, a decree of foreclosure was entered upon the cross bill against the fund realized by the sale.

After some other proceedings, not necessary [408] to be stated, a further decree was entered, August 12, 1883, adjudging that there was justly due to Harriet Brown, on account of said purchase money of the premises sold to Starr, including interest, the sum of $3,964, and that her said agreement with Starr be performed and carried into execution.

From this decree Mrs. Brown prayed and perfected the appeal which brings her case here.

Messrs. Charles A. Dupee and **Monroe L. Willard**, for appellant:

Where the right of a person to specific relief against another is so incumbered that he cannot assert his own right till he has got rid of that incumbrance, he cannot include the object of getting rid of the incumbrance in a suit for specific relief. If he do so his bill will be multifarious.

1 Dan. Ch. Pl. & Pr. 339; Story, Eq. Pl. § 272; *Dial* v. *Reynolds*, 96 U. S. 340 (24: 644).

It is not proper in a foreclosure suit to try a claim of title paramount to that of the mortgagor. The only proper object of the suit is to bar the mortgagor and those claiming under him.

Jones, Mortg. §§ 1439, 1440, 1445; *Chapman* v. *West*, 17 N. Y. 125; Story, Eq. Pl. § 230.

Where the purchaser has wantonly refused to pay at the time, when he had the means and could have done so, he cannot ask the court to excuse him for his willful disregard of the specified terms of his obligation, no matter how soon he may have repented of his perverseness and offered to perform.

Ditto v. *Harding*, 73 Ill. 117.

The decree is against the evidence, for the reason that no actual tender had ever been made and no facts are shown to excuse such tender or offer.

Pom. Spec. Perf. §§ 326, 360, 361; *Doyle* v. *Teas*, 5 Ill. 202.

Assignees for value should be subrogated to all the rights the holders of the coupons had.

Ketchum v. *Duncan*, 96 U. S. 659 (24: 868); Bigelow, Estop. (1872) 473.

If the usury could be set up, the bondholders have not the right to do it.

Adams v. *Robertson*, 37 Ill. 45; *De Wolf* v. *Johnson*, 23 U. S. 10 Wheat. 367 (6: 343).

To a proceeding *in rem*, the only defenses allowed are such as payment, satisfaction, discharge, release, or never a lien.

Henderson v. *Palmer*, 71 Ill. 579; *Fitzgerald* v. *Forristal*, 48 Ill. 228; *Carpenter* v. *Mooers*, 26 Ill. 162; *White* v. *Williams*, 3 N. J. Eq. 376, 383; *Troup* v. *Haight*, 1 Hopk. 239; *Petat* v. *Ellis*, 9 Ves. 568.

Mr. **J. L. High**, for appellee:

The objection of multifariousness is purely technical and is never considered with favor by courts of equity. Appellant was not only a proper but an absolutely indispensable party to the cross bill.

Holman v. *Bank of Norfolk*, 12 Ala. 869; *Cornwell* v. *Lee*, 14 Conn. 524; *Brinkerhoff* v. *Brown*, 6 Johns. Ch. 139; *Rann* v. *Rann*, 95 Ill. 433; *Brown* v. *Keeney Settlement Cheese Asso.* 59 N. Y. 242.

Unless the court can see that hardship and injustice have resulted from the joinder of parties, a decree should not be reversed upon this ground.

Oliver v. *Piatt*, 44 U. S. 3 How. 333 (11: 622).

Mere delay upon the part of the vendee in the payment of the purchase price will not prevent a specific performance, where the vendee is in possession with the vendor's consent, and especially where he has made valuable and permanent improvements upon the premises.

Pom. Spec. Perf. § 404; *Mason* v. *Wallace*, 3 McLean, 148; *S. C.* 4 McLean, 77; *Ahl* v. *Johnson*, 61 U. S. 20 How. 511 (15: 1005); *Ewins* v. *Gordon*, 49 N. H. 444.

Possession and improvements are grounds for a specific performance,

Potter v. *Jacobs*, 111 Mass. 32; *Murphy* v. *Lockwood*, 21 Ill. 611; *Bomier* v. *Caldwell*, 8 Mich. 463; *Ewins* v. *Gordon*, 49 N. H. 444.

Where one party fails in performing the contract, the other, if he means to rescind the contract, should give a clear notice of his intention.

Reynolds v *Nelson*, 6 Madd. 18.

Mr. Justice **Lamar** delivered the opinion of the court:

It is contended by the appellant that the decree below should be reversed on the ground that the cross bill is multifarious. In *Shields* v. *Thomas*, 59 U. S. 18 How. 253 [15: 368], this objection was urged against a bill, and in considering the objection the court say:

"There is perhaps no rule established for the conducting of equity pleadings, with reference to which (whilst as a rule it is universally admitted) there has existed less of certainty and uniformity in application, than has attended this relating to multifariousness. This effect, flowing, perhaps inevitably, from the variety of modes and degrees of right and interest entering into the transactions of life, seems to have led to a conclusion rendering the rule almost as much an exception as a rule; and that conclusion is that each case must be determined by its peculiar features."

So in *Gaines* v. *Chew*, 43 U. S. 2 How. 619, 642 [11: 402, 411], the court say:

"In general terms, a bill is said to be multifarious which seeks to enforce against different individuals demands which are wholly disconnected. In illustration of this, it is said if an estate be sold in lots to different persons, the purchasers could not join in exhibiting one bill against the vendor for a specific performance. Nor could the vendor file a bill for a specific performance against all the purchasers. The contracts of purchase being distinct, in no way connected with each other, a bill for a specific execution, whether filed by the vendor or vendees, must be limited to one contract." . . . "It is well remarked by *Lord* Cottenham, in *Campbell* v. *Mackay*, 7 Sim. 564, and in 1 Myl. & C. 603, 'to lay down any rule applicable universally, or to say what constitutes multifariousness, as an abstract proposition, is, upon the authorities, utterly impossible.' Every case must be governed by its own circumstances; and, as these are as diversified as the names of the parties, the court must exercise a sound discretion on the subject. Whilst parties should not be subjected to expense and inconvenience, in litigating matters in which they have no interest, multiplicity of suits should be avoided by uniting in one bill all who have an interest in the principal matter in controversy, though the interests may have arisen under distinct contracts." [411]

In that case the bill was filed against the two executors of the will of Daniel Clark, the heirs at law of his legatee, and the several purchasers of various pieces of property which had been sold off from the estate. The relief asked was an accounting in respect to the rents and profits of the several parcels, and for general relief as the heir and devisee of Clark under a different testament. Under this state of facts, the court said:

"The right of the complainant, Myra, must be sustained under the will of 1813, or as heir at law of Daniel Clark. The defendants claim mediately or immediately under the will of 1811, although their purchases were made at different times and for distinct parcels of the property. They have a common source of title, but no common interest in their purchases. And the question arises, on this state of facts, whether there is misjoinder or multifariousness in the bill which makes the defendants parties" . . . "And the main ground of the defense, the validity of the will of 1811, and the proceedings under it, is common to all the defendants. Their interests may be of greater or less extent, but that constitutes a difference in degree only, and not in principle. There can be no doubt that a bill might have been filed against each of the defendants, but the question is whether they may not all be included in the same bill. The facts of the purchase, including notice, may be peculiar to each defendant; but these may be ascertained without inconvenience or expense to codefendants. In every fact which goes to impair or establish the authority of the executors, all the defendants are alike interested. In its present form the bill avoids multiplicity of suits, without subjecting the defendants to inconvenience or unreasonable expense." [412]

The case against one defendant may be so entire as to be incapable of being prosecuted in several suits; and yet some other defendant may be a necessary party to some portion only of the case stated. In the latter case the objection of multifariousness cannot be allowed to prevail. *Atty-Gen.* v. *Poole*, 4 Myl. & C. 17, 31; *Turner* v. *Robinson*, 1 Sim. & S. 313; *Atty-Gen.* v. *Cradock*, 3 Myl. & C. 85.

It is not indispensable that all the parties should have an interest in all the matters contained in the suit; it will be sufficient if each party has an interest in some material matters in the suit, and they are connected with the others. *Addison* v. *Walker*, 4 Younge & Col. Exch. 442; *Parr* v. *Atty-Gen.* 8 Clark & F. 435; *Worthy* v. *Johnson*, 8 Ga. 238.

To support the objection of multifariousness, because the bill contains different causes of suit against the same person, two things must

concur: first, the grounds of suit must be different; second, each ground must be sufficient as stated to sustain a bill. *Bedsole* v. *Monroe*, 5 Ired. Eq. 313; *Larkins* v. *Biddle*, 21 Ala. 252; *Nail* v. *Mobley*, 9 Ga. 278; *Robinson* v. *Cross*, 23 Conn. 171.

Testing now the case at bar in the light of these authorities and their statements of the principle involved, it will be useful to get a clear view of the exact relations of the parties.

Assuming the statements of the cross bill to be true and the demands preferred by it to be meritorious, the objection of multifariousness, however presented, raises no question save the technical one of an undue uniting of demands. The attitude of the parties is this: Mrs. Brown, by her contract with Starr, and by his agreement with the Joliet Water Works Company, [413] had become the trustee of the legal title for the benefit of the company. Starr and the company, on the other hand, owed the purchase money to Mrs. Brown. By his assignment to the company only an equitable title was conveyed, for he had not a legal title; so the Water Works Company's mortgage to the Guarantee Trust and Safe Deposit Company was but the mortgage of an equity. Having no legal title itself, the mortgagor company could convey none to the mortgagee or the trustee. So also as to the other defendants to the cross bill, the intervenors under the original bill, whatever may be in fact the exact measure and nature of their various rights, all are in common interested in the legal title held as above stated, by Mrs. Brown. Indeed, as to all the parties to the cross bill and their respective demands, she holds the key to the whole situation, especially in view of the fact that the reservoir and engines are on the land in question.

Every defendant to the cross bill, as well as the complainant therein, is directly interested in the calling in of the legal title. It will necessarily enhance the value of the property to be sold, not merely by the increase in value by the amount paid by the complainant under its tender, but also and to a greater extent by the settlement of the title. To paraphrase the language of the court in *Gaines* v. *Chew*, *supra*, "in every fact which goes to establish the identity and value of the property sought to be sold", all the defendants are directly interested; not interested to the same extent nor in the same way, but still, in a substantial sense, interested in any decree which may be rendered.

The case of *Dial* v. *Reynolds*, 96 U. S. 340 [24: 644], relied on by counsel for the appellant in this connection, and its cognate cases, are not opposed to this view. This is not an instance of an attempt, in a foreclosure proceeding, to call in and litigate an outstanding legal title. It is the only legal title in the field; it is that under and through which mortgagor and mortgagee equally claim. To say that the alleged trustee of that title, because he chooses to deny the trust relation, can defeat the proceeding without an adjudication on its merits, and drive the mortgagee to a distinct and pre- [414] liminary suit, is to assume a position not supported by authority, and, in the opinion of this court, not maintainable.

The appellant further claims that as to Mrs. Brown the case made out below was not such a one as calls for specific performance, and in support of this view relies on alleged unreasonable delay in the payment of the purchase money. The legal propositions applicable to this question are well settled in this court.

In *Secombe* v. *Steele*, 61 U. S. 20 How. 94 [15: 833], it is said:

> "Time may be made of the essence of the contract by express stipulation, or it may become essential by considerations arising from the nature of the property or the character of the interest bargained. And the principle of the court of equity does not depend upon considerations collateral to the contract merely, nor on the conduct of the parties subsequently, showing that time was not of the essence of the contract in the particular case. *But it must affirmatively appear that the parties regarded time or place as an essential element in their agreement*, or a court of equity will not so regard it."

In *Holgate* v. *Eaton*, 116 U. S. 33 [29: 538], the court say:

> "In the case of *Taylor* v. *Longworth*, 39 U. S. 14 Pet. 173, 174 [10: 405, 406], *Mr. Justice* Story uses language which has since become a legal maxim in this class of cases. 'In the first place,' he says, 'there is no doubt that time may be of the essence of a contract for the sale of property. It may be made so by the express stipulation of the parties, or it may arise by implication from the very nature of the property, or the avowed objects of the seller or the purchaser. And even when time is not thus either expressly or impliedly of the essence of the contract, if the party seeking a specific performance has been guilty of gross *laches*, or has been inexcusably negligent in performing the contract on his part, or if there has, in the intermediate period, been a material change of circumstances affecting the rights, interests or obligation of the parties, in all such cases courts of equity will refuse to decree any specific performance, upon the plain ground that it would be inequitable and unjust.'"

Apply these principles to the contract between Starr and Mrs. Brown and what will be the result?

It was not even claimed that there was any [415] express stipulation between the parties that time should be of the essence of the contract; nor, on the other hand, that such obligation arose from the nature of the property or the avowed object of the seller.

It is asserted that there was an understanding that Starr should have no right or title to the land, or the right to any conveyance of the land, until the full purchase price should be paid. But that is a very different proposition. It has relation to the security reserved and not to the time of payment. It is true that in his deposition of April 18, 1883, Hobbs, the agent of Mrs. Brown, states that Starr agreed to pay cash and that such was "the basis of the contract." But no such claim was presented by the pleadings; and, moreover, Hobbs' testimony shows that there was an agreement for the postponement of the payment while Starr should go to Philadelphia; and, finally, in the same deposition and in a subsequent one he states that Starr had agreed to pay 8 per cent interest on the purchase money—a proposition manifestly inconsistent with the theory of appellant's insistence on a cash transaction. Without stopping to array them, it will suffice to say that numerous matters in the record show to the satisfaction of the court that Mrs. Brown consented to Starr's delay of payment, reluctantly, perhaps, but nevertheless consented. Even were it granted that time was of the essence of the contract, the conduct of Mrs.

Brown would have been a waiver of that fact. Her acceptance of a partial payment of $1,000, on the 17th of February, 1881, was certainly not a disaffirmance of the contract, but the contrary. So again, her demand for performance on the 27th of November, 1881, shows very plainly that up to that day it had not been abandoned. Hobbs in his first deposition states that there was a subsequent demand made by him on Starr for the money; and his second deposition shows that he sought an interview with the attorney of the committee of the bondholders on the 26th of January, 1883, for the purpose of getting the money due to Mrs. Brown on the contract with Starr.

The answer of Mrs. Brown declares that the [416] contract was abandoned and canceled in November, 1881, in Philadelphia. Even if she had the power so to do under the circumstances, still it was not done. The averments of the answer are not only not proved, but are even disproved by Hobbs himself. Hobbs was an officer of the Water Works Company. In his first deposition he gives this version of the transaction relied on in the answer. He says:

"I got on the train and went to Philadelphia and told Mr. Starr we insisted upon the payment of that amount and others, and if it was not paid or absolutely provided for while I was there in the city for a day or so, that I should return to Joliet, and the understanding was that Mr. Knowlton and myself would withdraw from the company; Mr. Starr failed, after various plans he had made, to produce the money; he failed in furnishing it, and I returned, he following me back within a few days, and we then withdrew from the company."

The witness is here speaking, as elsewhere appears, of not only this debt, but also of the general liabilities of the concern. Subsequently to this, he still demanded the money from Starr. Pom. Spec. Perf. 395, 396; *Reynolds* v. *Nelson*, 6 Mad. 19.

As between the appellant and the bondholders, represented by the trustee, it would be inequitable to refuse the consummation of her bargain.

The decree of the Circuit Court is affirmed.

---

[416]

RICHARD WOOD ET AL., *Appts.*
v.
THE GUARANTEE TRUST AND SAFE DEPOSIT COMPANY.

(See S. C. Reporter's ed. 416-426.)

Overdue coupons—question of fact—preference.

1. Where coupons have matured before assignment of them, any defense which existed against them in the hands of the assignor is available against the assignee.
2. Where the amount of coupons has been paid, the question whether it was intended as a payment, or a purchase, of the coupons is one of fact, rather than of law, to be settled by the evidence.
3. Overdue coupons detached from bonds before sale and which remain the property of the company that issued the bonds are not entitled to preference in payment, in the hands of an assignee, over the coupons sold by the company with the bonds and subsequently falling due.

[No. 21.]

Submitted April 25, 1888. Decided Nov. 19, 1888.

APPEAL from a decree of the Circuit Court of the United States for the Northern District of Illinois, dismissing the petition of appellants that coupons held by them have, in the distribution of the fund, priority of payment as against bonds and other coupons. *Affirmed.*

Statement by *Mr. Justice* **Lamar**: [417]

This is an appeal by interveners in the suit, one branch of which has been disposed of in the preceding case of *Brown* v. *Guarantee Trust and Safe Deposit Company* [*ante*, 408]. In addition to the facts set forth in that case, and which need not be repeated here, it may be stated that on the 23d of May, 1883, an order of the court below was entered, directing the holders of the bonds and coupons issued by the City of Joliet Water Works Company, and secured by mortgage to the appellee in this case, to present them to the clerk of the court, by a certain day, for payment thereon out of the funds then in the hands of that officer.

Pursuant thereto, appellants in this case filed 473 of said coupons held by them, and with them a petition praying that said coupons be decreed to have, in the distribution of said funds, priority of payment as against any of the holders or owners of the said bonds or the subsequently maturing coupons.

The petition alleges, in substance, that for material sold and delivered to Jesse W. Starr, which he used in the construction of his waterworks system, he was in debt to them $14,000, in part payment of which he transferred to them, in October, 1882, these 473 coupons, at par value, amounting to $7,095, and interest [418] from maturity; that the said coupons presented by appellants fell due before the completion of said water works; that upon many of them the amount due at maturity was advanced by Starr to the bondholders, who transferred the same to him; and that the said advance was made out of money which Starr ought to have applied to the payment of his indebtedness for the material so used, and which now constitutes a part of the system of the said water works.

The answer of the appellee contains substantially the statements of the cross bill set forth in the preceding case. It denies that the coupons presented by appellants had any validity whatever as a lien upon said funds in the custody of the clerk; alleges that all of them were delivered after they were due; and that of the 473 coupons held by appellants, 279 falling due January 1, 1881, and 77 of the 194 falling due July 1, 1881, were detached from the bonds by Starr before they were sold, and before the coupons themselves became due—only 117 being sold with the bonds prior to their maturity. It further alleges that these last coupons were extinguished, canceled and paid; that the holders of the bonds, who, as requested, presented said coupons for payment at the office of Starr's broker, had no thought of selling them, and, in fact, did not sell them; that all these acts of Starr—cutting off some and taking up others of said coupons—were withheld from the knowledge of said bondholders, were deceptive and fraudulent, were intended to conceal from appellee and the public the fact that the said Water Works Company was insolvent, and, in reality, making default in payment of the interest coupons;

and that, as said coupons were delivered by Starr to appellants long after their maturity, they took them subject to all defenses which might have been urged against Starr himself.

On May 12, 1884, the petition of appellants was dismissed at their costs, from which action they have brought this appeal.

[This case was argued with the preceding case of *Brown* v. *Guarantee Trust and Safe Deposit Company, ante*, p. 468, and by the same counsel. For the names of counsel, and their points and authorities see that case.]

[420] *Mr. Justice* **Lamar** delivered the opinion of the court:

In this appeal the first claim advanced is that since the 117 coupons, parcel of the lot in controversy, were paid by Starr with the funds that he had raised for the express purpose of defraying the expense of constructing the water works, it was his primary duty so to use the money; and that his failure so to do amounted to a diversion, which will entitle the appellants to a priority, under the doctrine of *Fosdick* v. *Schall*, 99 U. S. 235 [25:339].

[421] The argument is unsound. There are several answers to it. First, it overlooks the vital distinction between a debt for construction, and one for operating expenses. The doctrine of *Fosdick* v. *Schall* is applicable wholly to the latter class of liabilities. In the case of *Cowdrey* v. *Galveston H. & H. R. Co.* 93 U. S. 352 [23:950], it was settled that the doctrine does not apply where it is a question of original construction. Secondly, it overlooks the important fact that the doctrine only applies where there is a diversion of the income of a "going concern" from the purpose to which that income is equitably primarily devoted; viz., the payment of the operating expenses of the concern. In other words, the income must be first devoted to the expenses of producing the income. In this case it is not pretended that the money used in paying the 117 coupons in question was income of the Water Works Company. Thirdly, the doctrine of *Fosdick* v. *Schall* has never yet been applied in any case, except that of a railroad. The case lays great emphasis on the consideration that a railroad is a peculiar property, of a public nature, and discharging a great public work. There is a broad distinction between such a case and that of a purely private concern. We do not undertake to decide the question here, but only point it out. There is other ample ground upon which to decide this question.

It is further insisted, in reference to the 117 coupons, that appellants are entitled to recover on them in their own right, as owners, and independently of the doctrine of *Fosdick* v. *Schall*. These coupons matured July 1, 1881. Appellants came into possession of them in October, 1882—15 months after they were dishonored. If any defense existed against them in Starr's hands, the same defense is available now against Starr's assignee. It is claimed by the appellee that before the appellants acquired them they had been in fact paid. This is denied; and the case of *Ketchum* v. *Duncan*, 96 U. S. 659 [24:868] is relied on to support the denial.

The facts and the reasoning of the court in that case are as follows:

"Duncan, Sherman & Co., who furnished the money which the former owners received for the coupons, did not intend to pay them in any such sense as to relieve the railroad company from its [422] obligation. By advancing the money, and directing its payment to the holders of the coupons, they intended to take the place of those holders, and to become the owners of the evidences of the company's debt; or, in other words, they intended to obtain for themselves the rights of purchasers. They did not advance the money either to or for the company. Certainly, they did not intend to extinguish the coupons. Of this the evidence is very full. The firm had made advances to the company to pay the coupons due in November, 1873, as well as interest due in January and March, 1874, amounting to a very large sum. These advances had not been repaid when the May coupons fell due. Those coupons the company was then utterly unable to take up. In near prospect of this inability, William B. Duncan, the head of the firm, on the 28th of April, 1874, telegraphed from New York to the company at Mobile that his firm would purchase for their own account sterling coupons, payable in London. The firm also telegraphed to the Bank of Mobile and to the Union Bank of London to purchase the coupons there presented for them, charging their account with the cost, and transmitting the coupons uncanceled. The railroad company acceded to the proposition made them, and the Bank of Mobile and the Union Bank did also. Similar arrangements were made respecting the November coupons, except that Duncan, Sherman & Co. arranged with the Crédit Foncier to make the purchase in London. Both these banks were agents of the firm in the transactions. They were not agents of the railroad company. They had no funds of the company in hand. In taking up the coupons they acted for Duncan, Sherman & Co., charged the cost to their account, transmitted to them the coupons taken up without cancellation, and were repaid by them. In view of these facts it is manifest that, whatever may have been the nature of the transaction by which the coupons passed from the hands of the former holders into the possession of Duncan, Sherman & Co., it was not intended by the firm to be a payment or extinguishment of the company's liability. Neither they, nor the company, nor the Bank of Mobile, nor the Union Bank, nor the Crédit Foncier so in- [423] tended or understood it. Was it, then, a payment? It is as difficult to see how there can be a payment and extinguishment thereby of a debt without any intention to pay it as it is to see how there can be a sale without an intention to sell. But that the coupons were either paid, or transferred to Duncan, Sherman & Co. unpaid, is plain enough. The transaction, whatever it was, must have been a payment, or a transfer by gift or purchase. Was it, then, a purchase? It is undoubtedly true that it is essential to a sale that both parties should consent to it. We may admit, also, that 'Where, as in this case, a sale, compared with payment, is prejudicial to the holder's interest, by continuing the burden of the coupons upon the common security, and lessening its value in reference to the principal debt, the intent to sell should be clearly proved.' But the intent to sell, or the assent of the former owner to a sale, need not have been expressly given. It may be inferred from the circumstances of the transaction. It often is. In the present case, the nature of the subject cannot be overlooked. Interest coupons are instruments of a peculiar character. The title to them passes from hand to hand by mere delivery. A transfer of possession is presumptively a transfer of title. And especially is this true when the transfer is made to one who is not a debtor, to one who is under no obligation to receive them or to pay them. A holder is not warranted to believe that such a person intended to extinguish the coupons when he hands over the sum called for by them and takes them into his possession. It is not in accordance with common experience for one man to pay the debt of another, without receiving any benefit from his act. We cannot close our eyes to things that are of daily occurrence. It is within common knowledge that interest coupons, alike those that are not due and those that are due, are passed from hand to hand; the receiver paying the amount they call for, without any intention on his part to extinguish them, and without any belief in the other party that they are extinguished by the transaction. In such a case, the holder intends to transfer his title, not to extinguish the debt. In multitudes of cases, [424] coupons are transferred by persons who are not the

owners of the bonds from which they have been detached. To hold that in all these cases the coupons are paid and extinguished, and not transferred or assigned, unless there was something more to show an assent of the person parting with the possession that they should remain alive, and be available in the hands of the person to whom they were delivered, would, we think, be inconsistent with the common understanding of business men."

That case clearly settles the proposition that in such a matter as this, the question, as between payment and purchase, is one of fact rather than of law, to be settled by the evidence, largely presumptive, generally, in the case. It is a question of the intention of the parties.

In *Ketchum* v. *Duncan* stress was laid on these circumstances, viz.: that the persons alleged to have paid the coupons had no connection with the company issuing the coupons, or interest in it; that they had repeatedly and publicly notified the holders of the bonds and coupons that the coupons were to be purchased, not paid; and that the coupons were carefully received and preserved uncanceled. In the case at bar the conditions are radically different. Starr is essentially (that is, from a business point of view) the Water Works Company, owning, as he does, 19,500 of its 20,000 shares of stock. Its prosperity is manifestly his prosperity, its disaster his disaster, and any disbursement made by it is substantially made by him. There is, therefore, no inherent improbability that he intended to *pay* the coupons, as he indeed instructed his agents, the brokers, that he did. Moreover, such notice as was given, to call in the coupons, was notice of payment, not of purchase, so far as the evidence discloses the character at all. Finally, the coupons were canceled by Starr; all of them being punctured and defaced by mucilage, and about one half having the word "paid" written across them, in which condition, they were received by the appellants. Looking to the testimony, we decline to disturb the finding of the master and of the circuit court.

The same consideration of the substantial [425] identity between Starr and the Water Works Company is of great weight in the determination of the remaining question as to the other 356 coupons. Whatever might be the right of a holder of overdue coupons cut from a bond which is afterwards sold to a *bona fide* purchaser, as between such purchaser and the coupon holder, that question does not arise here.

The case before us is a peculiar one, and must be adjudged on its own facts. As we have already said, Starr was, from a business point of view, substantially the company. Not only was it his object to float the bonds, but to float the company, as well. Hence, when he came to sell these bonds, he arranged with his brokers, Beasly & Co. in reference to the July coupons (series No. 2). Under that arrangement, such of the coupons as were attached to, and had been sold with, the bonds sold early in the year 1881, were paid by Beasly & Co., the price was charged to Starr, and the coupons were delivered to him. Such of the coupons as were attached to bonds not themselves sold until the month of June, 1881, were detached from the bonds before sale, and were not charged to Starr, but were delivered to him as property of the company. The coupons of January, 1881, were all detached from the bonds before they were deposited with Beasly.

Now, why all this arrangement and management? To use the language of Mr. Beasly: "It would have been irregular and unbusiness-like to offer for sale or attempt to dispose of the bonds, *not then known in the market*, with overdue coupons attached." In brief, Starr was engaged in floating these bonds. They were not, as the testimony and the history of the case shows, good bonds. He was very careful to prevent anything from transpiring that would injure their credit. He cut off the coupons that were due and unpaid, so long as the bonds remained in his possession, and put up some money to redeem coupons which fell due on bonds that had been sold, so long as he was still engaged in selling other bonds. It looks very much as if Mr. Starr had dug a pit, and was anxiously keeping the pathway to it in good order. It would be inequitable, in our opinion, to allow him to bring forward these coupons as the basis of any preference over, or of even coequal rights with, those to whom he [426] sold his bonds; and the plaintiff, having taken these coupons when overdue, had no greater rights than he had in this respect. If the courts were to sanction such claims, the commercial securities of the world would be nullified.

The decree of the Circuit Court is affirmed.

IGNATIUS POLLAK, *Plff. in Err.*, [447]
v.
THE BRUSH ELECTRIC ASSOCIATION OF ST. LOUIS.

(See S. C. Reporter's ed. 447-456.)

Demurrer to special pleas—Alabama law of evidence—renewal of contract—dependent covenants—charge to jury.

1. Where the special pleas contained nothing of which the defendant could not have availed himself under his plea of the general issue, if the court erred in sustaining the demurrer to any of the special pleas, it was an error without injury, and no ground of reversal.
2. It is not error to allow a written agreement between the parties to be read in evidence without proof of its execution, under the Code of Alabama, unless the execution thereof be denied by plea, verified by affidavit.
3. Action of city council adopting the recommendation of its committee to renew a contract, and payments thereon by it, held to operate as an effective renewal of the contract with the city, although such renewal was not evidenced by a written contract covering a fixed period of time.
4. Covenants are to be considered dependent or independent, according to the intention of the parties, to be deduced from the whole instrument.
5. Where the court below correctly interpreted the agreement between the parties, and the evidence showed that the plaintiff was entitled to recover the sum specified in the agreement the direction to the jury to find for the plaintiff was right.

[No. 43.]

Argued Oct. 29, 1888. Decided Nov. 19, 1888.

IN ERROR to the Circuit Court of the United States for the Middle District of Alabama, to review a judgment against plaintiff in error, the defendant below, upon an agreement. *Affirmed.*

The facts are stated in the opinion.

Messrs. **Sam'l F. Rice** and **A. A. Wiley**, for plaintiff in error.

Mr. **H. C. Tompkins,** for defendant in error:

The sustaining of demurrers to pleas setting up matters specially which can be availed of as well under the plea of the general issue, if error at all, is error without injury.

Kannady v. *Lambert*, 37 Ala. 59; *Chambers County* v. *Clews*, 88 U. S. 21 Wall. 317 (22:517).

In Alabama, whenever by the breach of a special contract, a person becomes entitled to recover a sum *in numero*, or which can be rendered certain by a calculation, then he is entitled to recover that sum under the common counts.

Holloway v. *Talbot*, 70 Ala. 389; *Beadle* v. *Graham*, 66 Ala. 99; *Darden* v. *James*, 48 Ala. 33; *Columbia Bank* v. *Patterson*, 11 U. S. 7 Cranch, 299 (3:351); *Ingle* v. *Jones*, 69 U. S. 2 Wall. 1 (17:762).

There was no variance between the contract offered in evidence and the one described in the complaint.

Ferguson v. *Harwood*, 11 U. S. 7 Cranch, 408 (3:386); 1 Chitty, Pl. marg. p. 614; 1 Greenl. Ev. § 67; *Harrison* v. *Weaver*, 2 Port. 542; *Weaver* v. *Lapsley*, 42 Ala. 601; *McRae* v. *Raser*, 9 Port. 122.

Whenever the testimony is of such a conclusive character that the court would be compelled to set aside a verdict rendered in opposition to it, then it is its duty to withdraw the case from the jury by giving an affirmative charge in favor of the party in whose favor, from the evidence, the court, as a matter of law, would say the verdict should be rendered.

Goodlett v. *Louisville & N. R. Co.* 122 U. S. 391 (30:1230); *Randall* v. *Baltimore & O. R. Co.* 109 U. S. 478, 482 (27:1003).

The fact that a contract of sale provides that the title to the property sold shall remain in the vendor until paid for, does not make the promise of the vendee to pay any the less unconditional and absolute. The vendor may, if he desires to do so, retake the property, or he may sue for the purchase money.

Whitehead v. *Lane*, 72 Ala. 39, 42; *Lowery* v. *Peterson*, 75 Ala. 109.

The stipulations contained in the several paragraphs of the contract are entirely independent of each other.

Phila. W. & B. R. Co. v. *Howard*, 54 U. S. 13 How. 307, 339 (14:157, 171); *Am. Emigrant Co.* v. *Adams Co.* 100 U. S. 61 (25:563); *Hill* v. *Bishop*, 2 Ala. 320; 1 Chitty, Pl. marg. p. 323–4; *Pordage* v. *Cole*, 1 Wm. Saunders, 319 h; *Crawford* v. *Weston*, 131 Mass. 283.

The provisions of the contract are severable. It is a contract for the sale of several and distinct articles of property, and the right to recover for one is not dependent on performance as to the other.

Lucesco Oil Co. v. *Brewer*, 66 Pa. 351; *Quigley* v. *De Haas*, 82 Pa. 267, 273; *Scott* v. *Kittanning Coal Co.* 89 Pa. 231; *Johnson* v. *Johnson*, 3 Bos. & P. 162; *Young & C. Mfg. Co.* v. *Wakefield*, 121 Mass. 91.

Mr. Justice **Harlan** delivered the opinion of the court:

This writ of error brings up for review a judgment in favor of the Brush Electric Association of St. Louis, plaintiff below, against the plaintiff in error for the sum of $6,458.10.

Besides the common count for goods and merchandise sold to the defendant Pollak, the complaint contains a special count based on a written agreement between the parties, executed November 13, 1883. By the first article of that agreement Pollak agreed to pay to the plaintiff the sum of $7,942, as follows: "Seven thousand dollars in cash on the execution of this agreement, and the sum of nine hundred and forty-two dollars on the first day of January, 1884, in full settlement and satisfaction of all claims and demands due by Pollak & Co. and the Brush Electric Light and Power Company of Montgomery, Alabama, to the said Brush Electric Association of St. Louis; and the Brush Electric Association agrees to transfer or cause to be transferred to said Ignatius Pollak, without recourse, all the shares now held by the said Brush Electric Association and the Brush Electric Company of Cleveland, Ohio, in the said Brush Electric Light and Power Company of Montgomery, Alabama."

The remaining articles of the agreement are in these words:

"Second. The said Brush Electric Association of St. Louis agrees to furnish to the said Ignatius Pollak one number 8 dynamo-electric machine, one automatic dial for said machine, and forty arc lamps of two thousand candle power each, of different styles, for which the said Ignatius Pollak agrees to pay to the said Brush Electric Association of St. Louis by the first day of January, 1885, twelve per cent of [448] the cost of said machinery as per card rate hereto attached, signed by the parties and made a part of this agreement, which card rate is agreed by the parties to be the cost of said machinery. This twelve per cent, it is agreed by the parties, is to be considered a rental of said machinery, dial and lamps for the term of one year, and which are furnished to enable the said Ignatius Pollak to comply with his contract with the City Council of Montgomery, to light the streets of the City of Montgomery with electric lights.

"Third. It is further agreed that in case the City Council of Montgomery shall conclude to adopt the Brush electric light for the future lighting of the streets of the said City of Montgomery, Alabama, after the expiration of the time of the present contract between said Pollak and Company and the city council of Montgomery, that the said Ignatius Pollak will pay to the said Brush Electric Association of St. Louis, Missouri, by the first day of January, 1885, the cost of said machinery, dial and lamps as fixed and ascertained by said card rate hereto attached, and in that event the said Ignatius Pollak is not to pay the said twelve per cent, said twelve per cent being a separate and distinct arrangement, as a fair rental for the use of said machinery, dial, and lamps by the said Ignatius Pollak and for the risk assumed by the Brush Electric Association in furnishing the same to the said Ignatius Pollak in case the said City Council of Montgomery shall conclude not to continue lighting the streets of Montgomery with the Brush electric light after the expiration of their present contract with said Pollak & Co.

"Fourth. It is further understood and agreed that in case the said City Council of Montgomery shall not conclude to continue lighting

the streets of the said City of Montgomery with the Brush electric light after the expiration of their present contract with said Pollak & Co., the said Ignatius Pollak shall deliver the said dynamo-electric machine, said automatic dial, and said lamps by the first day of January, 1885, fully repaired and in good working order, to the said Brush Electric Association of St. Louis, at Cleveland, Ohio, or St. Louis, Missouri, as may be directed by the said Brush Electric Association of St. Louis, and that the title and property in and to said machinery, dial, and lamps shall be and remain in the said Brush Electric Association of St. Louis, until and unless the said Ignatius Pollak pays the cost of said machinery, dial and lamps, as provided by this agreement, in the third clause thereof.

449]

"Fifth. It is further understood and agreed that the said Ignatius Pollak shall have the right to purchase from the said Brush Electric Association of St. Louis any machinery and any pieces and parts of machinery which may be necessary for repairing and keeping in working order the present machinery in said City of Montgomery, and the machinery furnished to him by this agreement, at the same rates at which such machinery and pieces and parts of machinery are sold at the time to other private consumers by the said Brush Electric Association of St. Louis."

There was appended to this agreement a stipulation, signed by the parties, that the "delivery of said dynamo-electric machine, dial, and lamps on board the cars at said City of Montgomery, consigned to the said Brush Electric Association of St. Louis, at Cleveland, Ohio, or St. Louis, Missouri, as said Brush Electric Association may direct, costs of transportation prepaid, by the first day of January, 1885, shall be considered and held a delivery by said Ignatius Pollak, as provided in the fifth clause of the aforegoing agreement."

The card rates attached to the above agreement, and referred to in its second article, were these:

"St. Louis, Mo., Nov. 13, 1883.

"Mr. Ig. Pollak, Montgomery, Ala.,

"'83. Bought of the Brush Electric Association.

"Oct. 25.	30	No.	11	Lamps,	60....	1,800
	6	"	3	"	60....	360
	2	"	2	"	50....	100
	2	"	17	"	60....	120
	1	"	8	dynamo.....		3,600
	1	"	8	dial.....		200
						6,180."

450] At the time this agreement was made Pollak had a contract with the City of Montgomery for the lighting of its streets, which expired November 1, 1884. On the 4th of October, 1884, he addressed a communication to the city council, referring to the fact that the contract between him and the city "for twenty-three electric lights for street purposes" would expire on the 1st of November, and asking prompt action as to whether it would be renewed by the city, or whether additional lights would be taken. He further said in his communication: "Having incurred very heavy expense in bringing extra machinery here, and having to pay a heavy rental for the additional dynamo required for the city purposes, it becomes absolutely necessary that your decision should be rendered as early as possible, so that in the event of your declension to renew the contract I may be able to take down, pack and deliver the machinery at Cleveland, Ohio, within the time stipulated with the parent company of the Brush Electric Association." On the 6th of October, 1884, that communication was referred by the city council to the gas committee; and on the third of November, 1884, the recommendation of the committee, "that the contract with Pollak & Co. to furnish the city with twenty-three electric lights be renewed for one year," was adopted by the council. At a subsequent meeting of that body, held January 19, 1885, it was resolved that, "Renewing the contract for the electric light, the mayor is authorized and instructed to make the contract with the Brush Electric Light and Power Company." Of that company Pollak was president, and seemed to have exclusive control and direction of its business, including the property and machinery connected therewith. It was in proof that the dynamo and machinery sued for in this action were received by the defendant and used by him in performing his contract; that, at the time of the trial below, they were in use at the works of the last named corporation, which had furnished the electric light during the existence of the contract between the city and Pollak; and that the city continued after November 1, 1884, to make monthly payments to the defendant.

It was also in proof that there were about eighty miles of streets and more that one hundred different streets within the corporate limits of Montgomery, and that only a small portion of the city was ever lighted by the Brush electric light; that Commerce Street and Dexter Avenue were the only thoroughfares or streets that were thus lighted continuously all the way from end to end; that only twenty-three electric lights or lamps in all were or ever had been used or employed in the city for street lighting purposes; that the remainder of the lights not used on Commerce Street and Dexter Avenue were employed on parts of certain streets and were confined within a narrow compass, mainly in the business center of the city; that no greater number of lights or lamps were employed or contracted for, at any time, in the city for street lighting purposes than were used in the year 1884 up to the first of November of that year; that the area or territory covered with these lights had not in any manner been enlarged; and that there were a great variety of electric lights other than the Brush electric light serviceable for lighting streets, and were in use in various cities of the United States. [451]

It was further proven by a witness that the Legislature of Alabama convened in Montgomery on the 11th of November, 1884, remaining in session before its recess, during the balance of that month and a part of the succeeding month; that in the absence of any contract between the city and the defendant after the first day of November, 1884, the mayor of the city made a temporary arrangement with the defendant to furnish the Brush electric

light to the city for the purpose of keeping the portion of the city above described lighted during the balance of the month of November and the month of December, 1884.

This was in substance all the proof in the cause. The court charged the jury that if they believed the evidence the plaintiff was entitled to recover the prices of the machinery, as fixed in the above card of rates, with interest from January 1, 1885.

1. The special pleas contained nothing of which the defendant could not have availed [453] himself under his plea of the general issue. If the court erred in sustaining the demurrer to any of the special pleas, it was an error without injury, and, therefore, not constituting a ground of reversal. Code of Ala. 1886, § 2675; *Kannady* v. *Lambert*, 87 Ala. 59.

2. It was not error to allow the written agreement between the parties to be read in evidence without proof of its execution. The Code of Alabama provides that "Every written instrument, the foundation of the suit, purporting to be signed by the defendant, his partner, agent, or attorney in fact, must be received in evidence without proof of the execution, unless the execution thereof is denied by plea, verified by affidavit." Sec. 2770. There was no such plea in this case.

3. By the terms of the agreement between the parties, the defendant was to pay a certain amount to the plaintiff, by a named day, for the machinery, dial and lamps, provided the City Council of Montgomery concluded "to adopt the Brush electric light for the future lighting of the streets" of that city, after the expiration of the contract which Pollak & Company then had with the city. The main question in the case is whether the contingency just stated happened prior to January 1, 1885; if so, the contract between the parties became one of absolute sale, and bound the defendant to pay on that day the specified card rates for the property.

The defendant insists that the agreement, construed in the light of the circumstances attending its execution, contemplated something more than the adoption by the city council of the Brush electric light for the limited territory covered by the contract which Pollak & Co. then had with the city; and that the parties made their agreement with reference to an enlargement, after the expiration of that contract, of the area in the city to be lighted with the Brush electric light. We do not assent to this construction. The agreement was made in view of the fact that the city was then using, under the contract with Pollak & Co., only twenty-three of the Brush electric lights. The machine, dial and lamps furnished by the defendant were used, and presumably were needed, in order that Pollak & Co. might perform [454] that contract. He was to pay only certain rental therefor in case the city council concluded "not to *continue* lighting the streets of Montgomery with the Brush electric light after the expiration of the present contract with said Pollak & Co.;" and if the council concluded otherwise, then the machine, dial and lamps were to be returned to the defendant, fully repaired and in good working order, by January 1, 1885. These provisions clearly show that the lighting of the streets after November 1, 1884, with the Brush electric light, under an arrangement for that purpose with the city council, even to the limited extent provided for by the contract with Pollak & Co., was, within the meaning of the parties, such an adoption of that light by the city as bound the plaintiff to purchase the machine, dial and lamps in question and pay therefor, by January 1, 1885, the sum of $6,180. It could not have been their intention to make the permanent adoption of the Brush electric light, for an indefinite period for *all* the streets of the city, or for a larger territory than that stipulated for in the contract with Pollak & Co., a condition precedent to the defendant's obligation to buy the property at the aggregate price fixed. The communication of Pollak to the city council, under date of October 4, 1884, supports this conclusion. He distinctly says that if the then existing contract was not *renewed*, he was under a duty by his agreement with the defendant to take down, pack and deliver the machinery at Cleveland, Ohio; implying that if his contract was renewed no such duty would rest upon him. And that the contingency happened upon which the defendant became bound to purchase the property outright at the price above named, appears from the fact that the contract of Pollak & Co. was renewed. That renewal is shown by the action of the city council on the third of November, 1884. Its action in response to the written communication of Pollak, under date of October 4, and its monthly payments thereafter to him, operated as an effective renewal of his contract with the city, although such renewal was not evidenced by a written contract covering a fixed period of time. *City Council of Montgomery* v. *Montgomery Water Works Co.* 77 Ala. 254.

4. It is also contended that the plaintiff was not entitled to recover, except upon averment [455] or proof that it had transferred or offered to transfer to the defendant the shares of stock held by it and by the Brush Electric Company of Cleveland, Ohio, in the Brush Electric Light and Power Company of Montgomery. This cannot be unless, as insisted, his promise to pay, in the contingency named in the third article of the agreement of November 13, 1883, the sum of $6,180, was in consideration of the plaintiff's promise to transfer, or have transferred to him, the above shares. In support of this position the case of *Bank of Columbia* v. *Hagner*, 26 U. S. 1 Pet. 455, 465 [7:219,223], is cited. It was there said that the inclination of the courts strongly favors, as obviously just, that construction of contracts which makes the covenants or promises of the parties dependent rather than independent. After observing that the seller ought not to be compelled to part with his property without receiving the consideration, nor the purchaser to part with his money without an equivalent in return, the court said: "Hence, in such cases, if either a vendor or a vendee wish to compel the other to fulfill his contract, he must make his part of the agreement precedent, and cannot proceed against the other without an actual performance of the agreement on his part, or a tender and refusal."

But it is clear, as said in *Philadelphia, W. & B. R. Co.* v. *Howard*, 54 U. S. 13 How. 307, 339 [14:157, 171], that covenants are to be consid-

ered dependent or independent, according to the intention of the parties, to be deduced from the whole instrument. It is manifest that the covenant of the plaintiff in relation to the transfer of stock in the Brush Electric Light and Power Company is wholly independent of the agreement in relation to the machine, dial and lamps in question. The consideration for such transfer, and for the settlement and satisfaction of all claims due by Pollak & Co. and by the Brush Electric Light and Power Company to the plaintiff, was the payment by Pollak of a certain amount, part in cash on the execution of the agreement of November 13, 1883, and the balance on the first of January, 1884. On the other hand, the consideration for Pollak's agreement to pay, in a certain contingency, a [456] specified sum for the machine, dial and lamps, was his becoming the absolute owner of those articles, upon the happening of that contingency. The cost of the articles was fixed by the agreement at a certain aggregate sum, without reference to the transfer of the above mentioned stock. There is nothing whatever in the contract indicating that the payment for the machine, dial and lamps was to depend, in any degree, upon the transfer of the stock, or that the transfer of the stock was to depend upon the adoption of the Brush electric light by the city. The covenants were wholly independent; and, therefore, it was not essential, to the plaintiff's right to recover, that it should allege or prove that its agreement to transfer, or have transferred, to the defendant, the above described stock, had been performed. That may be the subject of a separate suit.

As the court below correctly interpreted the agreement between the parties, and as the evidence showed that the contingency happened which entitled the plaintiff to recover the sum specified in the agreement as the value of the property, the direction to the jury to find for the plaintiff was right. *Goodlett* v. *Louisville & N. R. Co.* 122 U. S. 391 [30:1230]; *Kane* v. *Northern Central R. Co.* 128 U. S. 91 [32:339].

The judgment is affirmed.

---

[443] W. C. JONES, *Plff. in Err.*,

v.

THE EAST TENNESSEE, VIRGINIA AND GEORGIA RAILROAD COMPANY.

(See S. C. Reporter's ed. 443-446.)

Action against railroad company for personal injuries—question for jury—province of jury.

1. In an action to recover damages against a railroad company for personal injury to plaintiff, by his being struck by an engine, where it appears that he was in the depot of defendant on business; that the passenger platform was alongside the tracks, which ran between it and the depot; that there was also a side track that went through the depot; that he passed out the depot by the usual way and was struck between the walls of the depot and the platform; that he could not see a train approaching because there was a car on the side track, and he had no warning of any approaching train although he listened as he went out of the depot; and there was evidence that there was so much noise about the place of exit from the depot, that the sound of the advancing train could not be distinguished; and, on the other hand, some testimony to show that the plaintiff ran carelessly through the depot, that he knew the train was approaching and might have guarded himself against it if he had stopped and looked—*held*, that the questions of the negligence of the defendant company and the contributory negligence of the plaintiff were questions for the jury to determine.

2. In a case where it is conceded that the defendant company is in fault on account of the manner of running its trains, such as the high rate of speed and the imperfect condition of their brakes, the court is not justified in refusing to submit to the jury the question whether the defendant company is relieved from the liability incurred by it, by reason of the acts of the plaintiff showing that, in some degree, he may not have been as careful as the most cautious and prudent man would have been.

3. So long as the jury system is the law of the land and the jury is made the tribunal to decide disputed questions of fact, there is no reason why it should not decide such questions as these.

[No. 58].

Argued Nov. 2, 1888. Decided Nov. 12, 1888.

IN ERROR to the Circuit Court of the United States for the Eastern District of Tennessee, to review a judgment for defendant, by direction of the court, in an action for damages for a personal injury to plaintiff by being struck by defendant's engine. *Judgment reversed, and new trial granted.*

The facts are stated in the opinion.

Mr. **Henry H. Ingersoll**, for plaintiff in error:

Plaintiff offered to show that he could not hear the train approaching from the East, and that too through no fault of his. He was entitled to show this.

Davis v. *N. Y. Cent. & H. R. R. Co.* 47 N. Y. 400.

This was a statutory action within the purview of section 1166 of the Code of Tennessee, which requires that on approaching a city or town the bell or whistle shall be sounded when the train is at a distance of one mile, and at short intervals till it reaches its depot or station.

Section 1167 provides that every railroad company that fails to observe these precautions shall be responsible for any damage done to person or property, occasioned by or resulting from any accident or collision that may occur.

New Code, §§ 1298, 1299.

Contributory negligence of plaintiff, however gross, does not defeat this statutory action.

Louisville & N. R. Co. v. *Burke*, 6 Coldw. 51; *Nashville & C. R. Co.* v. *Smith*, 6 Heisk. 174; *Nashville & C. R. Co.* v. *Nowlin*, 1 Lea, 528, *Louisville & N. R. Co.* v. *Gardner*, Id. 691.

Witnesses, whose attention was directed to the train, heard neither whistle nor bell nearer than 150 yards. Three brakemen and other employees of defendant depose as to signals given at short intervals.

In the conflict of proof about the signals, and under the peculiar environments of this place, plaintiff had a right to have the jury, under proper instructions from the court, pass upon two questions:

1. Was the bell or whistle sounded at all nearer than 150 yards from place of accident?

2. Was either sounded so near the depot as to serve as a precautionary signal to the public?

Longenecker v. *Pa. R. Co.* 105 Pa 328.

There is a general rule that one approaching a crossing with a vehicle should come to a halt, but this has been declared fruitless trouble in many cases.

Duffy v. *Chicago, & N. W. R. Co.* 32 Wis. 269;

Leavenworth, L. & G. R. Co. v. *Rice*, 10 Kan. 426.

It has been ruled that when a train was coming from a direction where with ordinary care it could not be seen, or under such circumstances as that its rumbling could not be heard, and there was no bell or whistle sounded, failure to stop was not contributory negligence.

Chicago, B. & Q. R. Co. v. *Lee*, 87 Ill. 454; *Davis* v. *N. Y. Cent. & H. R. R. Co.* 47 N. Y. 400.

There are no stop rules in the law for the pedestrian approaching a railroad crossing.

Garland v. *Chicago & N. W. R. Co.* 8 Ill. App. 571; *Dolan* v. *Delaware & H. Canal Co.* 71 N. Y. 285; *Kellogg* v. *N. Y. Cent. & H. R. R. Co.* 79 N. Y. 72.

He is not bound to anticipate negligence of defendant, but has a right to presume that it will give statutory signals and not run at unlawful speed.

Faber v. *St. Paul, M. & M. R. Co.* 29 Minn. 465; *Strong* v. *Sacramento & P. R. Co.* 61 Cal. 326; *Bunting* v. *Cent. Pac. R. Co.* 14 Nev. 351; *Richardson* v. *N. Y. Cent. R. Co.* 45 N. Y. 846; *Brown* v. *Lynn*, 31 Pa. 510.

Defendant may not impute to plaintiff a want of care or vigilance which has been caused by its own negligence.

Pa. R. Co. v. *Ogier*, 35 Pa. 60; *Ernst* v. *Hudson R. R. Co.* 35 N. Y. 28; *Chicago, B. & Q. R. Co.* v. *Triplett*, 38 Ill. 482.

Whether the facts be disputed or undisputed, if different minds may honestly draw different conclusions from them, the case must be left to the jury.

Sioux City & P. R. Co. v. *Stout*, 84 U. S. 17 Wall. 664 (21: 749).

When the circumstances are complicated, and the defendant is confessedly guilty of gross negligence contributing directly to the injury, and the common knowledge and experience of mankind does not, without doubt or hesitation, at once condemn the plaintiff as the author of his own misfortune, the court should, under proper instructions, take the judgment of a jury upon the question whether the plaintiff was, under all circumstances, guilty of such contributory negligence as precluded him from all redress for the palpable and confessed wrong of the defendant.

Bilbee v. *London etc. R. Co.* 18 C. B. N. S. 584; *Dublin etc. R. Co.* v. *Slattery*, L. R. 3 App. Cas. 1155; *Fernandes* v. *Sacramento City R. Co.* 52 Cal. 45; *Tyler* v. *N. Y. & N. E. R. R. Co.* 137 Mass. 238; *Craig* v. *N. Y. etc. R. R. Co.* 118 Mass. 431; *Gaynor* v. *Old Colony & N. R. Co.* 100 Mass. 208; *Johnson* v. *Hudson R. R. Co.* 20 N. Y. 65; *Haycroft* v. *Lake Shore & M. S. R. R. Co.* 64 N. Y. 636; *Bower* v. *Chicago M. & St. P. R. Co.* 61 Wis. 457.

Mr. **Wm. M. Baxter**, for defendant in error.

When the evidence given at the trial, with all the inferences which the jury could justifiably draw from it, is insufficient to support a verdict for the plaintiff, so that such a verdict, if returned, must be set aside, the court is not bound to submit the case to the jury, but may direct a verdict for the defendant.

Plaintiff came out suddenly from behind an obstruction and appeared upon the track simultaneously with the engine, at the point of collision, and it was impossible to have done anything whatever after he was seen and before he was struck. Under such a state of facts the statute does not apply, because impossibilities are not required.

E. Tenn. & Va. R. Co. v. *Swaney*, 5 Lea, 119.

As to the common-law liability, no argument is necessary to show the correctness of the court's action in directing a verdict for defendant in error.

Schofield v. *Chicago M. & St. P. R. Co.* 114 U. S. 615 (29: 224); 4 Am. & Eng. Encycl. of Law, p. 73, note 1.

Where the question is closed by decisions of this court, as it is upon the common-law point involved in this case, the citation of state decisions is entirely irrelevant.

Chicago v. *Robbins*, 67 U. S. 2 Black, 418 (17: 298).

Mr. Justice **Miller** delivered the opinion of the court: [444]

This is an action brought by W. C. Jones against the East Tennessee, Virginia and Georgia Railroad Company to recover damages for a personal injury inflicted upon him by his being struck by an engine belonging to the defendant company.

The suit was originally brought in the local state court, but was afterwards removed by the Railroad Company into the Circuit Court of the United States for the Eastern District of Tennessee. On the trial, after considerable testimony had been introduced on both sides, the court gave the jury the following instruction:

"This case, gentlemen, does not come within the purview of subsection of section 1166 of the Code of Tennessee. It must be determined upon the principles of the common law as interpreted and administered by the Supreme Court of the United States. It is not necessary for me to explain what would or would not be negligence on the part of the defendant; for it may be conceded that the defendant was negligent in running its train, without its brakes in good condition, at a higher rate of speed than was proper or safe under the circumstances of this case, and still the plaintiff would not be entitled to recover, simply because such negligence, if it existed, did not cause the injury complained of. In the judgment of this court, based upon the facts shown in evidence and not controverted by the argument, touching the manner of plaintiff's collision with defendant's engine, the plaintiff was guilty of such contributory negligence as precludes him from all right to recover in this action. The court therefore instructs you to return a verdict for the defendant."

It will be seen from his language that, while the court was of the opinion that the company was guilty of such negligence as would render it liable in this action, it was relieved from that liability by contributory negligence on the part of the plaintiff. It did not, therefore, permit the jury to pass either upon the negligence of the defendant company or the contributory negligence of the plaintiff.

The ground upon which the court based this decision is not shown, except so far as appears [445] from the statement in the extract above quoted, that "Upon the facts shown in evidence, and

not controverted by the argument touching the manner of the plaintiff's collision with the defendant's engine, the plaintiff was guilty of such contributory negligence as precludes him from all right to recover in this action." It is not to be inferred from this statement that counsel for the plaintiff conceded that he was guilty of contributory negligence; but the court proceeded upon the idea that the facts, which in its judgment were shown in evidence, not being controverted by argument, were sufficient to establish such negligence.

The evidence is embodied in the bill of exceptions before us, and we cannot agree with the circuit court that there was such a clear case of negligence on the part of the plaintiff as to justify the court in withdrawing the whole subject from the consideration of the jury. The plaintiff himself states that he was in the depot of the defendant on business; that the passenger platform was alongside the tracks, which ran between it and the depot; there was also a side track that went through the depot; that he passed out of the depot by the usual way, and was struck between the wall of the depot and the platform. He further says that the way he was going he could not see a train approaching from the east because there was a car on the side track, and he had no warning of any approaching train, although he listened as he went out of the depot. There is also some evidence that there was so much noise about the place of exit from the depot that the sound of the advancing train could not be distinguished. On the other hand there is some testimony to show that the plaintiff ran carelessly through the depot; that he knew the train was approaching, and that he might have guarded himself against it if he had stopped at the exit of the depot long enough to have looked about him.

But we think these are questions for the jury to determine. We see no reason, so long as the jury system is the law of the land and the jury is made the tribunal to decide disputed questions of fact, why it should not decide such questions as these as well as others. There is [446] nothing in a case in which it is conceded, fully and unreservedly, that the defendant company is in fault on account of the manner of running its trains, such as the high rate of speed and other careless matters mentioned by the court in its instructions, which should justify the court in refusing to submit to the jury the question whether the defendant company is relieved from the liability incurred by it, by reason of the acts of the plaintiff showing that, in some degree, he may not have been as careful as the most cautious and prudent man would have been.

Instead of the course here pursued a due regard for the respective functions of the court and the jury would seem to demand that these questions should have been submitted to the jury, accompanied by such instructions from the presiding judge as would have secured a sound verdict. We think the case is covered by that of *Kane* v. *The Northern Central R. Co.* 128 U. S. 91 [*ante*, 339], in which the opinion of this court was delivered by *Mr. Justice* Harlan, October 22, 1888.

We forbear to discuss the facts further at this time, as we do not wish to prejudice the case before the jury, in the further proceedings which must be had.

The judgment of the Circuit Court is reversed, with instructions to grant a new trial.

UNITED STATES, *Plff.*, [398]
v.
ROE REISINGER.

(See S. C. Reporter's ed. 398-408.)

Pension attorney—Punishment for excessive fee.

1. An agent or attorney, or person instrumental in prosecuting a claim for a pension, can be legally convicted and punished for having, prior to the repeal of the Act of Congress of June 20, 1878, received for his services a greater sum than is provided in that Act, notwithstanding such Act has been repealed, and that such release is without any saving clause or reservation of the right to prosecute or punish for offenses in violation of said Act committed prior to such repeal.

2. By section 13 of the Revised Statutes the repeal of any statute does not release or extinguish any penalty, forfeiture or liability, incurred under such statute, unless the repealing Act shall so expressly provide.

[No. 59.]

Submitted Nov. 1, 1888. Decided Nov. 26, 1888.

ON a certificate of division in opinion between the Judges of the Circuit Court of the United States for the Western District of Pennsylvania, as to whether an attorney or agent in a pension case can be punished under the Act of June 20, 1878, for having received, prior to to its repeal, more fees than allowed by said Act; said Act having been repealed without reservation of the right to punish for offenses in violation of it. *Question answered in affirmative.*

Statement by *Mr. Justice* **Lamar:**

This case comes before the court on the following certificate of division in opinion between the Judges of the Circuit Court:

In the Circuit Court of the United States, Western District of Pennsylvania.

The United States vs. Roe Reisinger. } No. 1. May Term, 1885.

At a Circuit Court of the United States, held at the City of Pittsburg, for the Western District of Pennsylvania, on the 5th day of August, 1885, before the Hon. William McKennan and Hon. M. W. Acheson, Judges, this cause came on to be heard, and was argued by counsel; and on the hearing a question occurring upon which the judges were divided in opinion, upon the request and motion of the United States, by its district attorney and counsel, Wm. A. Stone, Esq., the point upon which the Judges disagreed is now (during the same term) by them hereinafter stated, to the end that the same [399] may be certified to the supreme court at their next session for final decision.

Section 13 of the Revised Statutes is as follows: "The repeal of any statute shall not have the effect to release or extinguish any penalty, forfeiture, or liability incurred under such statute, unless the repealing Act shall so expressly provide; and such statute shall be treated as still remaining in force for the purpose of sustaining any proper action or prosecution for the enforcement of such penalty, forfeiture, or liability."

By the Act of Congress entitled "An Act Relating to Claim Agents and Attorneys in Pension Cases," approved June 20, 1878 (Stat. at L. Vol. 20, p. 243), it is enacted:

"It shall be unlawful for any attorney, agent or other person to demand or receive for his services in a pension case a greater sum than ten dollars."

And by the Act of Congress approved March 3, 1881 (Stat. at L. Vol. 21, p. 408; Supplement to the Revised Statutes, 386), it is enacted as follows:

"And the provisions of section 5485 of the Revised Statutes shall be applicable to any person who shall violate the provisions of an Act entitled 'An Act Relating to Claim Agents and Attorneys in Pension Cases,' approved June 20, 1878."

Said section 5485 is as follows:

"Any agent or attorney or any other person instrumental in prosecuting any claim for pension or bounty land, who shall directly or indirectly contract for, demand, or receive or retain any greater compensation for his services, or instrumentality in prosecuting a claim for pension or bounty land, than is provided in the title pertaining to pensions, or who shall wrongfully withhold from a pensioner or claimant the whole or any part of the pension or claim allowed and due such pensioner or claimant, or the land warrant issued to any such claimant, shall be deemed guilty of a high misdemeanor, and, upon conviction thereof, shall for every such offense be fined not exceeding five hundred dollars or imprisonment at hard labor not exceeding two years, or both, at the discretion of the court."

[400] By the Act of Congress approved July 4, 1884 (Stat. at L. p. 98), it is (*inter alia*) enacted, "That the Act entitled 'An Act Relating to Claim Agents and Attorneys in Pension Cases,' approved June 20, 1878, is hereby repealed. *Provided, however*, That the rights of the parties shall not be abridged or affected as to contracts in pending cases, as provided for in said Act; but such contracts shall be deemed to be and remain in full force and virtue, and shall be recognized as contemplated by said Act."

In this state of the law, on the 14th day of April, 1885, an indictment was found in this case against the defendant, Roe Reisinger, charging him with having violated the said Act of Congress entitled "An Act Relating to Claim Agents and Attorneys in Pension Cases," approved June 20, 1878, in that on the 8th day of January, 1883, at the County of Crawford, in the district aforesaid, being the agent, attorney and person instrumental in prosecuting a claim for pension for one Samuel Dixon, he did receive for his services in that behalf a greater sum than is provided in and by said Act, to wit: 'the sum of $100; and also in that on the first day of January, 1883, at the county and district aforesaid, being the agent, attorney, and person instrumental in prosecuting a claim for pension for one Elijah O'Daniels, he did receive for his services in that behalf a greater sum than is provided in and by said Act, to wit: the sum of $50.

To which indictment the defendant did demur, on the ground that the statute creating the offense set forth in the indictment and fixing a punishment therefor had been repealed without saving the right to the United States to prosecute for offenses committed in violation of said Act prior to the repeal of the same. And the Government joining in said demurrer, it occurred as a question whether the defendant could be legally convicted and punished under the said indictment and the Acts of Congress aforesaid, the said recited Act of June 20, 1878, entitled "An Act Relating to Claim Agents and Attorneys in Pension Cases," having been expressly repealed by the Act of July 4, 1884, without any saving clause or reservation of the right to prosecute or punish for offenses in violation of said Act [401] of June 20, 1878, committed prior to the repeal thereof.

Upon which question the undersigned Judges are divided in opinion; and upon the request of the United States, by its district attorney and counsel, they make the foregoing statement and execute this certificate; and it is ordered that the same, together with a copy of the record and proceedings in the cause, be certified under the seal of the court to the supreme court at their next session, according to law.

Mr. **G. A. Jenks,** *Solicitor Gen.*, for plaintiff:

The common-law effect of the repeal of a penal law has been changed by statute.

Rev. Stat. § 13.

The law creating the offense still survives. The common-law rule, as stated by *Justice* Field in *United States* v. *Tynen*, 78 U. S. 11 Wall. 95 (20:155), is that there can be no legal conviction, nor any valid judgment pronounced upon the conviction, unless the law creating the offense be at the time in existence.

Norris v. *Crocker*, 54 U. S. 13 How. 440 (14:214); *Md.* v. *Balt. & O. R. Co.* 44 U. S. 3 How. 552 (11:722); 1 Hale, P. C. 291.

In order to effect a discharge the Act which made the offense and imposed the penalty must be repealed. The offense in this case is charged under section 5485. That section made the offense and imposed the penalty. It still remains unrepealed.

Hartung v. *People*, 22 N. Y. 95.

(No counsel appeared for defendant.)

Mr. Justice **Lamar** delivered the opinion of the court:

It is conceded that, under the general principles of the common law, the repeal of a penal statute operates as a remission of all penalties for violations of it committed before its repeal, and a release from prosecution therefor after said repeal, unless there be either a clause in the repealing statute, or a provision of some other statute, expressly authorizing such prosecution. In this case the court is of the opinion that § 13 R. S. contains such provision. It reads as follows:

"The repeal of any statute shall not have the effect to release or extinguish any penalty, forfeiture, or liability incurred under such statute, unless the repealing Act shall so expressly provide, and such statute shall be treated as still remaining in force for the purpose of sustaining any proper action or prosecution for the enforcement of such penalty, forfeiture, or liability."

This section, we think, clearly excepts offenses committed before the passage of the repealing Act of 1884. To show this, it is only necessary to read the Act of 1884 in connection with § 13, R. S., as one Act. It would then read substantially as follows: "Be it enacted, etc., That the Act entitled 'An Act Relating to Claim Agents and Attorneys in Pension Cases,' approved June, 1878, is hereby repealed; *Provided*, That said repeal shall not have the effect to release or extinguish any penalty, forfeiture, or liability incurred thereunder, and that the same shall be treated as still remaining in force for the purpose of sustaining any proper action or prosecution for the enforcement of such penalty or liability." [402]

The only ground upon which the correctness of this interpretation may be doubted is, that the words "penalty," "liability" and "forfeiture" do not apply to crimes and the punishments therefor, such as we are now considering. We cannot assent to this. These words have been used by the great masters of Crown Law and the elementary writers as synonymous with the word punishment, in connection with crimes of the highest grade. Thus, Blackstone speaks of criminal law as that "branch of jurisprudence which teaches of the nature, extent and degrees of every crime, and adjusts to it its adequate and necessary penalty." Alluding to the importance of this department of legal science, he says: "The enacting of penalties to which a whole nation shall be subject should be calmly and maturely considered." Referring to the unwise policy of inflicting capital punishment for certain comparatively slight offenses, he speaks of them as "these outrageous penalties," and repeatedly refers to laws that inflict the "penalty of death." He refers to

other Acts prescribing certain punishments for treason as "Acts of pains and penalties."

That the Legislature intended that this 13th section should apply to all offenses is shown by § 5598, R. S., under the title of "Repealed Provisions," which is as follows:

"All offenses committed and all penalties or forfeitures incurred under any statute embraced in said revision prior to said repeal, may be prosecuted and punished in the same manner and with the same effect as if said repeal had not been made."

It was the obvious intention of § 13, R. S., to extend this provision to the repeal of any statute not embraced in such revision.

The views we have expressed find support in the case of the *United States* v. *Ulrici*, 3 Dill. 532, which was an indictment for conspiring to defraud the Government of internal revenue taxes. It became necessary there to determine the meaning of the words "penalty," "forfeit-
[403] ure," "liability," and "prosecution," in § 13 of the Revised Statutes. The court, speaking by *Mr. Justice* Miller, said:

"But, without attempting to go into a precise technical definition of each of these words, it is my opinion that they were used by Congress to include all forms of punishment for crime; and as strong evidence of this view, I found, during the progress of the argument, and called the attention of the counsel to a section, which prescribed fine and imprisonment for two years, wherein Congress used the words: 'Shall be liable to a penalty of not less than one thousand dollars . . . and to imprisonment not more than two years.' Morever, any man using common language might say, and very properly, that Congress had subjected a party to a liability, and, if asked what liability, might reply, a liability to be imprisoned. This is a very general use of language, and surely it would not be understood as denoting a civil proceeding. I think, therefore, that this word 'liability' is intended to cover every from of punishment to which a man subjects himself, by violating the common laws of the country. Besides, as my brother Treat reminds me, the word prosecution is used in this section, and that usually denotes a criminal proceeding."

For the reasons we have given, the question presented by the certificate is answered in the affirmative.

---

[456] CHARLES CORNELIUS, *Piff. in Err.*,

v.

CATHARINA MARGARETHA KESSEL.

(See S. C. Reporter's ed. 456-463.)

Entry of public land—duty to issue patent—when one tract is not subject to entry—grantee, when trustee—Commissioner of General Land Office cannot cancel lawful entry.

1. Where a tract of land is subject to entry as public land, the validity of the entry of such land is not affected by the fact that another tract, not subject to disposal as public land, was entered at the same time and included in the same entry.

2. The tract thus subject to entry, when thus purchased and paid for, ceased to be the property of the United States or subject to its disposal. The legal title was held by it as trustee for the benefit of the purchaser and it was bound upon proper application to issue to him a patent therefor.

3. If the United States, from inadvertence or mistake, afterwards conveyed the title of such tract to another, the grantee with notice took it as trustee of the first purchaser, who could compel its transfer to him.

4. The power of supervision possessed by the Commissioner of the General Land Office over the acts of the register and receiver of the local land offices to correct and annul entries of land allowed by them, can be exerted only when the entry was made upon false testimony or without authority of law. It cannot be exercised so as to deprive any person of land lawfully entered and paid for.

5. The interest of one who lawfully enters a tract of public land, acquired by him by his entry, is not lost or impaired by an illegal order of the Commissioner of the General Land Office, directing its cancellation.

[No. 60.]

Submitted Nov. 2, 1888. Decided Nov. 19, 1888.

IN ERROR to the Supreme Court of the State of Wisconsin, to review a judgment in favor of defendant in an action for the possession of land. *Affirmed.*

The facts are stated in the opinion.

Mr. **Conrad Krez,** for plaintiff in error:

The cancellation of the Davidson entry was in accordance with law, within the scope of the authority conferred upon the commissioner, and is *res judicata* and conclusive.

Moore v. *Robbins*, 96 U. S. 535 (24:851); *Steel* v. *St. Louis S. & R. Co.* 106 U. S. 451 (27:228).

In ejectment, when the question is presented whether the plaintiff or the defendant has the superior legal right, the patent must prevail.

Gibson v. *Chouteau*, 80 U. S. 13 Wall. 102 (20:537).

The presumptions in favor of the Puffer patent are conclusive.

St. Louis S. & R. Co. v. *Kemp*, 104 U. S. 636, 641 (26:875, 877).

(No counsel appeared for defendant in error.)

Mr. Justice **Field** delivered the opinion of [457]
the court:

This case comes to us from the Supreme Court of Wisconsin. It is an action for the possession of forty acres of land, being part of a quarter section in Township 16 of Range 20, in the County of Sheboygan, in that State, and was brought in the circuit court of that county. The complaint alleges that the plaintiff has the lawful title as the owner in fee simple, and the right to the possession of the demanded premises; and that the defendant wrongfully withholds them from him to his damage of three hundred dollars. It therefore prays that the defendant may be adjudged to surrender to the plaintiff their possession and to pay the said damages.

In support of his alleged title the plaintiff relies on a patent of the United States for a [458]
tract embracing the demanded premises, issued to one Myron H. Puffer on the 4th of June, 1877, upon a homestead entry made by him in December of the previous year, and sundry mesne conveyances from the patentee.

The answer of the defendant admits that she was in possession of the premises at the commencement of the action, but denies generally and specifically the other allegations of the complaint, and pleads in bar of the action an entry upon the premises, by her, and those through whom she derives her interest, under claim of title, exclusive of any other right, founded upon a written instrument as a conveyance thereof, and their occupation under such claim for more than ten years prior to the commencement of the action.

The answer also sets forth, under a separate heading or count, by way of counter claim,

various matters which the defendant claims constitute in equity a defense to the action and entitle her to a decree that she has a right to the title and possession of the premises. Those matters, briefly stated, are substantially as follows: In January, 1856, one Henry I. Davidson entered, two tracts of land in Township 16 of Range 20, in Sheboygan County, one of which constitutes the premises in controversy, as public lands of the United States subject to entry, paid the full purchase price to the receiver of the land office for the district, and obtained from him the usual duplicate receipt therefor, which was duly recorded in the office of register of deeds of the county in April, 1857. Subsequently Davidson and his wife conveyed the tract in controversy to one Joseph Hein, and from him, through sundry mesne conveyances, all of which are on record in the register's office of the county, the property, in October, 1869, became vested in Jacob Kessel, the husband of the defendant. Kessel died in July, 1876, in possession of and thus owning the premises, leaving the defendant, as his widow, and four children surviving him. By his last will and testament, which has been admitted to probate, he devised to the defendant a life estate in the premises in controversy, and she is now in possession, holding the same thereunder, the fee thereof being in the children, [459] subject to her life estate. And she alleges that, from the time of the entry by Davidson down to the death of Kessel, there was an uninterrupted possession and claim of title by Kessel and his predecessors, and that valuable improvements were made thereunder, without their knowledge of any adverse claim or of the assertion of interest of any kind.

In October, 1857, an order was made by the Commissioner of the General Land Office, canceling the entry of Davidson for the two tracts of land, on the alleged ground that one of them, not the tract embracing the premises in controversy, was included in a prior grant to the State, and therefore was not subject to entry. The order of cancellation was made without previous notice of any kind to Davidson or any party in interest under the entry, and the purchase money paid was never returned or offered to him or to any of his successors in interest; and the defendant contends that the order was erroneously and improperly made. The Commissioner of the General Land Office afterwards came to the same conclusion, and in June, 1879, he directed the entry to be reinstated as to the tract which had not been previously granted to the State; that is, the tract in controversy in this case. It was between the cancellation and the reinstatement of the entry as to this tract that the homestead entry was made by Myron H. Puffer, and the patent issued to him.

The answer also imputes fraudulent conduct to the register or receiver of the land office of the district, alleging, on information and belief, that the entry of Puffer was made in his interest, but it is not deemed necessary to repeat the imputations. It concludes with a prayer that the title to the premises may be adjudged to have been in Jacob Kessel at the time of his death, and that the defendant is entitled to the possession thereof, or that such other and further relief be granted as may be just.

The practice of setting up in actions at law defenses, whether of a legal or equitable character, is permissible under the laws of Wisconsin. They are required, however, to be separately stated, that they may be considered on their distinctive merits, and, if established, that the appropriate relief may be administered. When, as in this instance, the action is for the [460] possession of land, the grounds set forth must be sufficient to entitle the defendant to a decree that the title of the property be transferred from the plaintiff to him, or that the plaintiff be enjoined from prosecuting the action for the possession of the property. The equitable defense is, therefore, to be first considered and determined, for, if sustained, there will be no occasion for proceeding with the remedy at law; *Quinby* v. *Conlan*, 104 U. S. 420 [26: 800]; and that course was pursued in the present case. The court took up the matters alleged as grounds for equitable relief and considered the evidence adduced in their support; and it thereupon found that the allegations of the answer as to those matters were sustained in all particulars. Judgment was accordingly rendered in favor of the defendant, declaring that the entry of Myron H. Puffer and the patent thereon issued to him were null and of no effect as a conveyance of the premises; that the defendant's testator died vested with an equitable title to them, and entitled to their possession and to a patent therefor from the United States, and that the defendant has such estate and possession during her life; and directing that the complaint of the plaintiff be dismissed with costs. On appeal to the supreme court of the State the judgment was affirmed.

The forty acres in controversy were subject to entry in January, 1856, when Davidson entered them together with another tract. The validity of the entry of those acres was not affected by the fact, that the second tract belonged to the State of Wisconsin under the swamp-land grant, and was not, therefore, subject to the disposal of the United States. A defect in the title of one of several parcels sold does not invalidate the sale of the others if the purchaser makes no objection. When the tract, which was subject to entry, was thus purchased and paid for, it ceased to be subject to the disposal of the United States; it was not in equity their property. *Carroll* v. *Safford*, 44 U. S. 3 How. 441, 460 [11: 671, 680]; *Witherspoon* v. *Duncan*, 71 U. S. 4 Wall. 210, 218 [18: 339, 342]. The legal title, it is true, was retained by them, but they held it as trustee for the benefit of the purchaser; and they were bound upon proper application to issue to him a patent therefor. [461] If from inadvertence or mistake as to their rights, or other cause, they afterwards conveyed that title to another, the grantee with notice took it subject to the equitable claim of the first purchaser, who could compel its transfer to him. In all such cases a court of equity will convert the second purchaser into a trustee of the true owner and compel him to convey the legal title. *Lindsey* v. *Hawes*, 67 U. S. 2 Black, 554 [17:265]; *Stark* v. *Starr*, 78 U. S. 6 Wall. 402-419 [18: 925-930].

The power of supervision possessed by the Commissioner of the General Land Office over the acts of the register and receiver of the local land offices in the disposition of the public

lands, undoubtedly authorizes him to correct and annul entries of land allowed by them, where the lands are not subject to entry, or the parties do not possess the qualifications required, or have previously entered all that the law permits. The exercise of this power is necessary to the due administration of the land department. If an investigation of the validity of such entries were required in the courts of law before they could be canceled, the necessary delays attending the examination would greatly impair, if not destroy, the efficiency of the department. But the power of supervision and correction is not an unlimited or an arbitrary power. It can be exerted only when the entry was made upon false testimony, or without authority of law. It cannot be exercised so as to deprive any person of land lawfully entered and paid for. By such entry and payment the purchaser secures a vested interest in the property and a right to a patent therefor, and can no more be deprived of it by order of the Commissioner than he can be deprived by such order of any other lawfully acquired property. Any attempted deprivation in that way of such interest will be corrected whenever the matter is presented so that the judiciary can act upon it.

In *Lindsey* v. *Hawes* we have a noted instance in which the court inquired into the facts of a disputed entry of public lands, and gave effect to a lawful entry, which had been set aside, and the certificate issued canceled, by order of the Commissioner of the General Land Office. In that case it appeared that Lindsey had in 1839 [462] applied to the register and receiver of the land office at Galena to purchase land, claiming the right of preemption under the Act of 1838, by reason of cultivation and actual residence thereon, and having established his claim to the satisfaction of those officers, he received from them, in June, 1839, the proper certificate, stating the receipt of the purchase money, and that on its presentation to the Commissioner of the General Land Office he would be entitled to a patent. Subsequently, in 1845, the Commissioner set aside this entry, and ordered the certificate to be canceled, on the ground that a mistake had been made in the original survey of the land, and that by a new survey ordered in 1844, it was ascertained, as he supposed, that the house in which Lindsey resided, when he made his claim in 1839, was not on the land for which he received his certificate. After this, one Hawes claimed a preemption right to the same land, and the Commissioner directed the register and receiver to hear proof of his right, and to adjudicate upon it. They accordingly heard his proof, and gave him a certificate, upon which a patent was afterwards issued to him. Lindsey died in the same year in which he made his entry, and his heirs, who had no notice of the new survey made five years afterwards, or of the proceedings by which Hawes established his claim before the register and receiver, brought suit against Hawes and grantees from him, to compel a transfer by them of the title obtained by the patent. It appeared that the residence of Lindsey was on the line which, according to the new survey, divided the quarter section he entered from an adjoining quarter section; so that in one sense it may be said that he resided on both quarter sections. The court held that the Government was bound by the original survey; that Lindsey's residence was sufficiently on the section which he claimed; that the patent certificate was rightfully issued to him; that the act of the Commissioner in setting it aside was illegal, and did not destroy the right thus vested; that the land was not, therefore, subject to entry by Hawes; that the patent obtained by him was wrongfully and illegally issued to him; and that the heirs of Lindsey were entitled to a conveyance of the legal title from him and his codefendants.

That case covers the present one in all essen- [463] tial particulars. The interest of Davidson in the tract, which embraces the premises in controversy, acquired by him by his entry, was not lost or impaired by the order directing its cancellation. That order was illegally made, and those claiming under him can stand upon the original entry and are not obliged to invoke the subsequent reinstatement of the entry by the Commissioner. As that entry, with the payment of the purchase money, gave Davidson a right to a patent from the United States, his heirs are entitled to a conveyance of the legal title from those holding under the patent wrongfully issued to Puffer.

Whether Davidson or his successors would have had a right to surrender his entry, upon learning that one of the tracts entered had been previously granted to the State, and claim a return of the purchase money, is a question that does not arise here. It is sufficient to say that, until such objection was raised by them, it did not lie with the land department to oppose the completion of his title to the tract which was subject to entry.

The judgment entered in the court below would have been in better form had it directed a conveyance to the heirs of Jacob Kessel, subject to the life estate of the defendant, from those holding under the patent to Puffer, of the legal title which he had acquired to that portion which was subject to entry. The heirs would thus avoid the necessity of applying to the land department for a patent, which it might refuse to issue, until the patent already issued had been canceled by judicial proceedings.

The supreme court of the State makes some comment upon the form of the judgment, but observes that there is nothing in it of which the plaintiff can complain. He cannot be prejudiced by the cancellation of the patent, because the legal title vested in him by that instrument must inure to those who have the superior right to it. *The judgment is, therefore, affirmed.*

THOMAS J. COGSWELL ET AL., *Plfs. in Err.*, [391]
v.
SAMUEL W. FORDYCE.

(See S. C. Reporter's ed. 391-392.)

Jurisdiction as to amount—action upon bond.

1. This court cannot take cognisance of a case in which the matter in dispute, exclusive of costs, does not exceed the sum or value of $5,000.

2. An action upon a bond, given to supersede a judgment or decree of a court of the United States, is not an action brought on account of the deprivation of any right, privilege or immunity, secured by the

Constitution of the United States or of any right or privilege of a citizen of the United States, so as to give this court jurisdiction under section 699 Rev. Stat., without regard to the sum or value in dispute.

[No. 63.]

Submitted Nov. 2, 1888. Decided Nov. 19, 1888.

IN ERROR to the Circuit Court of the United States for the Eastern District of Arkansas, to review a judgment in favor of plaintiff upon a bond given on appeal to this court conditioned to pay all costs and damages sustained by the obligee in the penalty of $3,600, the judgment being for $2,400. *Dismissed.*

Statement by *Mr. Justice* **Harlan:**

Samuel W. Fordyce recovered in the Circuit Court of the United States for the Eastern District of Arkansas, December 7, 1882, a judgment in ejectment against Thomas J. Cogswell and Anna M. Cogswell. From that judgment the latter prayed an appeal to this court, executing, with J. L. Goodbar as surety, a bond in the penalty of thirty-six hundred dollars, conditioned that the principal obligors would prosecute their appeal with effect, or, failing therein, pay all such costs and damages as the obligee sustained by reason of the wrongful detention of the property sued for.

The obligors having failed to prosecute their appeal, the present suit was brought, February 24, 1885, upon said bond, to recover the sum of $3,600, as the damages sustained by reason of the detention of the property from the plaintiff in the ejectment suit.

A demurrer to the complaint having been overruled, the defendants filed an answer. The parties consenting thereto in writing, the case was tried by the court without the intervention of a jury, and judgment rendered June 20, 1885, in favor of the plaintiff for the sum of two thousand four hundred dollars.

Messrs. **Samuel Shellabarger, J. M. Wilson** and **Casey Young,** for plaintiffs in error:

Where a suit is ancillary to a federal case and dependent, the jurisdiction of such ancillary suit can be maintained without reference to the citizenship or residence of the parties.

Minnesota Co. v. *St. Paul Co.* 69 U. S. 2 Wall. 609 (17: 886); *Freeman* v. *Howe*, 65 U. S. 24 How. 450 (16:749); *Krippendorf* v. *Hyde*, 110 U. S. 276 (28: 145); *Pacific R. Co.* v. *Mo. Pac. R. Co.* 111 U. S. 505 (28: 498); *Dewey* v. *Coal Co.* 123 U. S. 333 (31: 181); *Johnson* v. *Christian*, 125 U. S. 645, 646 (31: 820, 821).

The fact that an instrument which is the muniment of a title is one the execution of which is authorized by a law of Congress, does not cause an action which is based upon said instrument to be a suit arising under a law of the United States.

Wilson v. *Sandford*, 51 U. S. 10 How. 99 (13: 344); *Blanchard* v. *Sprague*, 1 Cliff. 299; *Goodyear* v. *Day*, 1 Blatchf. 566; *Goodyear* v. *Rubber Co.* 4 Blatchf. 67; *Merserole* v. *Paper Collar Co.* 6 Blatchf. 356; *Pulte* v. *Derby*, 5 McLean, 336; *Carpenter* v. *Williams*, 76 U. S. 9 Wall. 786 (19: 828); *Hartell* v. *Tilghman*, 99 U. S. 549 (25: 358).

The practice of the courts is to retain the case until a trial of the facts before the jury or by the court, and on the proof determine the question of jurisdiction.

Nashville v. *Cooper*, 78 U. S. 6 Wall. 247 (18: 851); *Robinson* v. *Anderson*, 121 U. S. 522 (30: 1021); *Dennistoun* v. *Draper*, 5 Blatchf. 336; *Murray* v. *Patrie*, Id. 343; *Fisk* v. *Union Pac. R. Co.* 6 Blatchf. 363.

(No counsel appeared for defendant in error.)

Mr. Justice **Harlan** delivered the opinion of the court:

This court cannot take cognizance of this case. The matter in dispute, exclusive of costs, does not exceed the sum or value of five thousand dollars. R. S. §§ 690, 691; Act of Feb. 16, 1875, chap. 77, §§ 3, 4, 18 Stat. at L. 315; R. S. Supp. 136.

It was, perhaps, supposed that our jurisdiction could be sustained under the fourth subdivision of section 699 of the Revised Statutes, [392] providing that this court may, without regard to the sum or value in dispute, review any final judgment at law or final decree in equity of any circuit court, or of any district court acting as a circuit court, "in any case brought on account of the deprivation of any right, privilege, or immunity secured by the Constitution of the United States, or of any right or privilege of a citizen of the United States." But an action upon a bond given to supersede a judgment or decree of a court of the United States, cannot properly be said to have been brought on any such account. The mere failure or refusal of the obligors in such a bond to comply with its terms is not, within the meaning of the statute referred to, a "deprivation" of a right secured to the obligee by the Constitution of the United States, or of any right or privilege belonging to him, as a citizen of the United States. See *Bowman* v. *Chicago & N. W. R. Co.* 115 U. S. 611, 615 [29: 502, 504].

The writ of error is dismissed.

UNITED STATES, THOMAS J. CARR, [393]
Marshal of the U. S., etc., ET AL., *Appts.*,
v.
FRANK W. DEWALT.

(See S. C., Reporter's ed. 393-394.)

Infamous crime, what is—infamous punishment.

1. The crime of embezzlement and making false entries by the president of a national bank, in violation of section 5209, Rev. Stat. for which he was sentenced and committed to the penitentiary for ten years, is an infamous crime, although it is not subject to the penalty of hard labor as part of the punishment of imprisonment.

2. Imprisonment in a state prison or penitentiary, with or without hard labor, is an infamous punishment.

[No. 81.]

Argued Nov. 15, 1888. Decided Nov. 19, 1888.

APPEAL from an order of the First Judicial District Court of the Territory of Wyoming, discharging on *habeas corpus* a person convicted upon an information of the crime of embezzlement and making false entries as president of a national bank, in violation of section 5209, R. S. *Affirmed.*

The facts are stated in the opinion.

Mr. **G. A. Jenks,** *Solicitor-Gen.*, for appellants.

(No counsel appeared for appellee.)

Mr. Chief Justice **Fuller** delivered the opinion of the court:

DeWalt, the appellee, was tried and convicted, upon an information, of the crime of embezzlement and making false entries as the president of a national bank, in violation of section 5209 of the Revised Statutes, and sentenced and committed to the penitentiary for ten years. This section prescribes the punishment of imprisonment for not less than five nor more than ten years, which imprisonment may be ordered to be executed in a state jail or penitentiary. R. S. § 5541. Appellee was subsequently discharged on *habeas corpus*, upon the ground that the crime in question was an infamous crime, for which he could not, under the Constitution, be held to answer on information, but only on presentment or indictment by a grand jury. From the order discharging him this appeal is prosecuted, and it is contended that a crime is not infamous which is not subject to the penalty of hard labor as part of the punishment of imprisonment.

This, however, was otherwise ruled in *Mackin v. United States*, 117 U. S. 348 [29: 909], where
[394] this court held, speaking through *Mr. Justice* Gray, "that at the present day imprisonment in a state prison or penitentiary, with or without hard labor, is an infamous punishment."

That case is decisive of this, and *the order appealed from must be affirmed.*

---

[435]

UNITED STATES, *Appt.*,
v.
JOHN G. FOSTER.

(See S. C. Reporter's ed. 435-437.)

Longevity Acts—claim for pay.

1. The Acts of 1882 and 1883 do not require or authorize a restatement of the pay accounts of an officer of the navy who served in the regular or volunteer army or navy, so as to give him credit in the grade held by him prior to their passage, for the time he served in the army or navy before reaching that grade

2. Congress only intended to give him credit in the grade held by him, after those Acts took effect, for all prior services, whether as an enlisted man or officer, counting such services, however separated by distinct periods of time, as if they had been continuous and in the regular navy in the lowest grade having graduated pay held by him since last entering the service.

[No. 1162.]

Submitted Nov. 5, 1888. Decided Nov. 19, 1888.

APPEAL from a judgment of the Court of Claims, in favor of plaintiff for the amount due him under what is known as the Longevity Acts of Congress. *Reversed.*

Statement by *Mr. Justice* **Harlan:**

This is an appeal from a judgment against the United States in favor of the plaintiff,
[436] Foster, for the sum of $1,393.40, as the amount due him under what is known as the Longevity Acts of Congress.

Prior to November 28, 1861, he served in the navy as an enlisted man for six years and forty days; and he served as gunner in the regular navy from November 28, 1861, until April 14, 1868, a period of six years and one hundred and forty-five days, when he resigned. He was reappointed gunner December 27, 1869, since which date he has served continuously in that capacity. Under the Longevity Acts of 1882 and 1883 (22 Stat. at L. 284, 287, c. 391; Id. 473, c. 97) he has been allowed credit, for prior services only upon his second warrant as gunner, and he has been credited upon *that* warrant with twelve years and one hundred and eighty-five days, the entire period of his service, as enlisted man and gunner prior to his re-entering the service on the 27th day of December, 1869. If he had been allowed on his first warrant as gunner, for his previous service of six years and forty days as an enlisted man, he would have received, as the result of such credit, the sum of $1,393.40, the amount of the judgment below, exclusive of the thirty-three and one third per centum increase under General Order, No. 75, of May 26, 1866.

Between the date of his resignation on April 14, 1868, and his reappointment as gunner December 27, 1869, the plaintiff held no position in the navy.

The Longevity Act of 1883 (the addition to the Act of 1882 being shown by italics), under which the present claim is made, provides that "All officers of the navy shall be credited with the actual time they may have served as officers or enlisted men in the regular or volunteer army or navy, or both, and shall receive all the benefits of such actual service in all respects in the same manner as if all said service had been continuous and in the regular navy *in the lowest grade having graduated pay held by such officer since last entering the service;* Provided, That nothing in this clause shall be so construed as to authorize any change in the dates of commission or in the relative rank of such officers; *Provided, further, That nothing herein contained shall be so construed as to give any additional pay to any such officer during the time of his service in the volunteer army or navy.*" [437]
22 Stat. at L. 284, 287, c. 391; Id. 478, c. 97.

Messrs. **A. H. Garland,** *Atty-Gen.*, **Robert A. Howard,** *Assist. Atty-Gen.*, and **F. P. Dewees,** *Assist. Atty.*, for appellant.

Messrs. **Robert B. Lines** and **John Paul Jones,** for appellee.

Mr. Justice **Harlan** delivered the opinion of the court:

There is no claim that the plaintiff did not receive, on his first warrant as gunner, that is, for the whole period of his first continuous service in that position, all the compensation to which he was entitled as gunner, under the law as it was during that period. And it is found, in effect, that he has received credit, on his second warrant as gunner, for the actual time of his entire service prior to December 27, 1869, both as enlisted man and gunner, counting such service as if it had been continuous and in the regular navy in the lowest grade having graduated pay held by him after he re-entered the service, that is, in the grade of gunner. In our judgment, he is not entitled to more under existing legislation. The Acts

of 1862 and 1863 do not require or authorize a restatement of the pay accounts of an officer of the navy who served in the regular or volunteer army or navy, so as to give him credit *in* the *grade* held by him, *prior* to their passage, for the time he served in the army or navy before reaching that grade. Congress only intended to give him credit *in* the *grade* held by him, *after those Acts took effect*, for all prior services, whether as an enlisted man or officer, counting such services, however separated by distinct periods of time, as if they had been continuous and in the regular navy in the lowest grade having graduated pay held by him since last entering the service; and that credit has been given to the plaintiff. In this view, the conclusion reached by the court of claims was erroneous.

The judgment is reversed, with directions to dismiss the petition.

---

[395] LEWIS N. CLARK, *Plf. in Err.*
v.
COMMONWEALTH OF PENNSYLVANIA.

SAME *v.* SAME.

(See S. C. Reporter's ed. 395 397.)

Record of court—what it should contain—evidence necessary—to what state court a writ of error lies.

1. This court will act only upon the record of the court below; and the petitions for a writ of error form no part of the record.
2. In order to review a state judgment it is essential that the record should disclose not only that the alleged right, privilege or immunity was specially set up and claimed in the court below but that the decision of the court was against the right so set up or claimed.
3. Where the evidence upon which the plaintiff in error was convicted is not made a part of the record, nor what it tended to establish is anywhere therein stated, and certain instructions to the jury were requested and refused, it cannot be determined whether the action of the court involved the point now allegod as error, or whether the refusal to give the instruction amounted to a ruling and denial of such claim.
4. Where plaintiff in error was indicted and convicted and sentenced in the Court of Quarter Sessions of Allegheny County, Pennsylvania, and applied to a judge of the supreme court of that State for a writ of error to the court of quarter sessions which was denied, and he could go no farther, *held*, that the judgment of the latter court may be considered final for the purposes of a writ of error.

[Nos. 1189, 1190.]

Argued Nov. 5. 1888. Decided Nov. 19, 1888.

IN ERROR to the Court of Quarter Sessions of the Peace for the County of Allegheny, State of Pennsylvania, to review convictions and sentences upon indictments for selling spirituous liquor on Sunday and for unlawfully keeping a house where spirituous liquor was sold by retail. *Writs of error dismissed.*

The facts are stated in the opinion.

Mr. **W. L. Bird,** for plaintiff in error.

Mr. **W. D. Porter,** for defendant in error.

(The court declined to hear counsel for defendant in error.)

[396] *Mr. Chief Justice* **Fuller** delivered the opinion of the court:

In the first of the above cases, Clark, the plaintiff in error, was indicted with others in the Court of Quarter Sessions of Allegheny County, Pennsylvania, on the 29th of June, 1888, for selling spirituous liquor on Sunday, contrary to the form of the Act of the General Assembly of Pennsylvania in such case made and provided, and upon trial was convicted and sentenced to pay a fine of $200 and to be imprisoned for sixty days, to take effect on the expiration of the sentence in the second case here, which was the first below.

In the second case it appears that Clark and others were also indicted for that they "unlawfully did keep and maintain a house, room and place where vinous, spirituous, malt and brewed liquors and admixtures thereof were sold by retail, without having first obtained a license agreeable to law for that purpose;" and the indictment contained a further count that they "unlawfully did sell and offer for sale vinous, spirituous, malt and brewed liquors and admixtures thereof, without having first obtained a license agreeably to law for that purpose." Upon this indictment a trial was had, resulting in the conviction of Clark, and he was sentenced to pay a fine of $500 and to be imprisoned in the county jail for three months.

Clark then applied in each case to one of the Judges of the Supreme Court of Pennsylvania for a writ of error to the court of quarter sessions, which was denied; and as Clark could go no farther, the judgments of the latter court may be considered final for the purposes of the writs of error granted in these cases.

In the petitions for the writs it is stated that plaintiff in error was the part owner and captain of a steamboat actually engaged in navigating the Ohio, Monongahela and Allegheny Rivers as a passenger vessel, and as such duly licensed and enrolled under the laws of the United States, and that petitioner had complied with all of the laws of the United States in regard to steam vessels, including the payment of [397] a revenue tax for the purpose of selling liquor on said steamboat; and it is averred that by these judgments petitioner is denied "the rights and privileges secured by the Constitution of the United States."

These matters are repeated in the briefs; and it is argued on behalf of Clark that he was entitled, under the commerce clause of the Constitution, to immunity from the laws of Pennsylvania requiring a license for the sale of liquors, and forbidding such sale on Sunday.

The evidence upon which the plaintiff in error was convicted is not made a part of the record, nor what it tended to establish anywhere therein stated. Certain instructions, which were requested to be given to the jury and which were refused by the court of quarter sessions, appear and seem to have been asked with the view of raising the question suggested; but whether the action of the court actually involved the point can only be determined upon a record embracing sufficient of what passed upon the trial to show that it necessarily did so. We act only upon the record of the court below, and of that record the petitions for the writs of error form no

part. *Warfield* v. *Chaffe*, 91 U. S. 690 [23: 383]. And see *Susquehanna Boom Co.* v. *West Branch Boom Co.* 110 U. S. 57 [28: 69]. It is essential that the record should disclose, not only that the alleged right, privilege or immunity was specially set up and claimed in the court below, but that the decision of that court was against the right so set up or claimed.

In the absence of anything in these records to show that the instructions requested were based upon evidence and could have been properly given if Clark were right in his claim of immunity, we cannot tell whether or not the refusal to give them amounted to a ruling in denial of such claim.

The writs of error must be dismissed, and it is so ordered.

---

[394] THE PACIFIC POSTAL TELEGRAPH CABLE COMPANY, *Plff. in Err.*,

v.

Hugh O'CONNOR.

(See S. C. Reporter's ed. 394-395.)

Motion to dismiss—jurisdictional amount.

Where a verdict rendered in the circuit court for $5,500, and the court directed, as minuted by the clerk, judgment to be entered thereon, and the next day, in the absence of defendant and his counsel, the court granted leave to the plaintiff to remit the sum of $500, and judgment was rendered for $5,000 and costs, and such court denied a motion to set aside the allowance of the remittitur and to correct the judgment,—*held*, that the action of the circuit court was not an abuse of its discretion; and as the judgment, as it stands, is for $5,000 only, the motion to dismiss must be granted.

[No. 1282.]

Submitted Nov. 12, 1888. Decided Nov. 19, 1888.

IN ERROR to the Circuit Court of the United States for the Northern District of California, to review a judgment in favor of plaintiff for damages for personal injuries.

On motion to dismiss. *Granted.*

The facts are stated in the opinion.

Mr. **D. M. Delmas**, for defendant in error, for motion to dismiss:

A writ of error will be dismissed for want of jurisdiction in a case such as is presented in the record in this case.

Thompson v. *Butler*, 95 U. S. 694 (24:540); *Ala. Gold L. Ins. Co.* v. *Nichols*, 109 U. S. 233 (27:916); *First Nat. Bank of Omaha* v. *Redick*, 110 U. S. 224 (28:124).

The order made, after judgment, refusing to set aside the order allowing a remission of a portion of the verdict, was one resting wholly in the discretion of the court below, and a writ of error in this court will not lie from such order.

Thompson v. *Butler*, 95 U. S. 695 (24:915); *Home Ins. Co.* v. *Barton*, 80 U. S. 13 Wall. 603 (20:708).

Messrs. Lloyd & Wood and **Andrew Wesley Kent**, for plaintiff in error, in opposition:

The court below having rendered judgment for $5,500 the writ of error lies.

A judgment is not what is entered, but what is ordered and considered.

Freeman, Judgm. §§ 38, 39.

It takes effect immediately after being pronounced by the court.

Davis v. *Shaver*, Phil. L. (N. C.) 18; *Osborne* v. *Toomer*, 6 Jones, L. (N. C.) 440; *Matthews* v. *Houghton*, 11 Maine, 377; *Fish* v. *Emerson*, 44 N. Y. 376; *Casement* v. *Ringgold*, 28 Cal. 335.

A judgment is rendered when declared by the court; and its subsequent entry by the clerk is a mere ministerial act.

Gray v. *Palmer*, 28 Cal. 416; *Wetherbee* v. *Dunn*, 36 Cal. 249.

It was not in the power of the court below, after rendering judgment, to reduce the verdict or modify the judgment so as to deprive this court of jurisdiction.

N. Y. Elevated R. Co. v. *Fifth Nat. Bank of N. Y.* 118 U. S. 610 (30:259); *Thompson* v. *Butler*, 95 U. S. 696 (24:540).

The court below erred in allowing defendant in error to prejudice the right of plaintiff in error to a review of the judgment by this court.

Smith v. *Memphis & L. R. Co.* 18 Fed. Rep. 804.

Mr. Chief Justice **Fuller** delivered the opinion of the court:

This was an action to recover damages for personal injuries, which resulted, August 29, 1888, in a verdict for $5,500. Upon the return of the verdict the court directed, as minuted by the clerk, judgment to be entered thereon. On the 30th day of August the plaintiff below, by his counsel, asked leave in open court to remit the sum of $500, which was granted, and judgment rendered for $5,000 and costs, "and now so appears of record."

Subsequently the defendant below moved to set aside the allowance of the remittitur and to correct the judgment, which motion was denied by the court, and defendant excepted, [395] and by bill of exceptions brought the court's direction to the clerk of August 29th into the record, and the fact that the judgment of August 30th was rendered in the absence of defendant and his counsel.

A writ of error having been subsequently prosecuted to reverse the judgment, defendant in error moves to dismiss it for want of jurisdiction.

We cannot hold upon this record the action of the circuit court to have been in abuse of its discretion, and as the judgment as it stands is for $5,000 only, the motion to dismiss must be granted. *Ala. Gold L. Ins. Co.* v. *Nichols*, 109 U. S. 232 [27:915]; *First Nat. Bank of Omaha* v. *Redick*, 110 U. S. 224 [28:124]; *Thompson* v. *Butler*, 95 U. S. 694 [24:540].

Writ of error dismissed.

CLARENCE P. HUNT, *Appt.*, [464]

v.

SALLIE S. BLACKBURN ET AL.

(See S. C. Reporter's ed. 464-471.)

Conveyance to husband and wife—right of survivor—decree when binding—privileged communications between attorney and client—estoppel of wife—second deed.

1. At common law, husband and wife do not take, under a conveyance of land to them jointly, as tem-

ants in common or as joint tenants; but each becomes seised of the entirety. Neither can dispose of any part without the assent of the other, but the whole remains to the survivor under the original grant.

2. At common law, also, when lands are granted to husband and wife as tenants in common, they will hold by moieties, as other individual persons would do.

3. Where the wife has obtained a decree, quieting her title as between her and her husband's heirs and his grantee to an undivided half of lands conveyed to herself and husband; and has also joined with such grantee, in seeking relief, as co-owners, against an execution sale of a parcel of the land, and the rectification of a mistake in the deeds, and the vesting of title in herself and such grantee, and such relief was accorded by the decree, these adjudications, standing unreversed, are binding upon her.

4. The seal of secrecy upon communications between client and attorney is the privilege of the client; and if the latter has voluntarily waived the privilege, it cannot be insisted on to close the mouth of the attorney. If the client testifies to what took place between himself and his attorney, he waives his right to object to the attorney's giving his own account of the matter.

5. Where the husband and wife purchased the separate halves of a piece of land at different times, and with the intent of holding in moieties, and conveyed the husband's half to a purchaser who paid therefor in good faith and without actual notice and for a valuable consideration, the wife cannot, years afterwards, insist that she acquired an estate by entirety, although a second deed was so drawn as to run directly to the husband and wife, and was given at the time they were conveying to such purchaser.

6. Such second deed could not devest the title which had once vested in the husband and wife, by the former conveyance from the same grantor, nor alter its nature.

[No. 16.]

Submitted Nov. 1, 1888. Decided Nov. 26, 1888.

APPEAL from a decree of the District Court of the United States for the Eastern District of Arkansas, dismissing a suit to quiet title to lands and for partition. *Reversed.*

Statement by *Mr. Justice* **Fuller:**

Hunt filed his bill in equity in the District Court for the Eastern District of Arkansas, on the 25th of June, 1881, against Sallie S. Blackburn, Charles B. Blackburn, and W. P. Smith, claiming as a purchaser for value, with the knowledge and assent of Sallie S. Blackburn, of an undivided half of a plantation in Desha County, Arkansas, of which the defendant, Sallie S. Blackburn, owned the other half; and deraigning title by sundry mesne conveyances from one Shepard to W. A. Buck, whose wife said Sallie S. then was, by Buck and wife to Drake, Drake to Winfrey, who, as Hunt al-
[465] leged, purchased for value with Mrs. Buck's knowledge and assent, Winfrey's assignee to Weatherford, and Weatherford to himself; setting up certain decrees hereinafter mentioned, and praying, after averments appropriate to such relief, that his title be quieted, and for partition.

Defendant Sallie S. Blackburn answered April 25, 1883, asserting sole ownership of the lands under a deed from Shepard to W. A. Buck, her then husband, and herself, and charging, in respect to the decrees upon the title, that she was misled by her attorney and confidential adviser, Weatherford, as to her rights, and was not estopped thereby or by any conduct of hers, in faith of which either Winfrey or Hunt acted in purchasing.

The cause was heard and the bill dismissed March 10, 1884, and from that decree this appeal is prosecuted.

The case made upon the pleadings and evidence appears to be as follows: Sallie S. Blackburn, then Sallie S. Buck, wife of Walter A. Buck, on the 24th day of April, 1868, purchased of one Shepard an undivided half of 973 acres of land in Desha County, Arkansas, partially improved, and took a title bond stipulating for a mode of division to be made between her and her vendor, as soon as practicable, so that each should have half the improved land, and for a conveyance in fee to Mrs. Buck when the division was made. Mrs. Buck was put in possession of an undivided half in accordance with the agreement. In June, 1868, W. A. Buck, the husband, purchased the other half of Shepard, who gave him a written memorandum evidencing the purchase. Buck then, in January, 1869, sold his half to J. S. Drake, conveying the same to him on the second day of that month by warranty deed, in which his wife, Sallie S., joined, her acknowledgment being that for relinquishment of dower.

The evidence tends to show that during 1868 Shepard executed and delivered a deed of the property to Mr. and Mrs. Buck, so drawn as to recognize their separate interests, which deed was not recorded, but in January, 1869, when Buck sold to Drake, the latter's then attorney was not satisfied and drew another deed of the entire property for Shepard to execute, which [466]
he did, running directly to Walter A. Buck and Sallie S. Buck, and bearing the same date as the deed to Drake, January 2, 1869.

Drake and Buck and wife farmed the land in partnership up to 1872, when, on the 7th of February of that year, Drake sold to J. T. Winfrey, and gave him an agreement to convey. In the mean time Buck died; and on the 11th day of March, 1872, Mrs. Buck filed her sworn bill in equity against the children and heirs at law of Buck, deceased, Shepard, Drake, Winfrey and others, in the Circuit Court of Desha County, claiming an undivided half of the land, setting forth the ownership by her husband of the other half, his sale to Drake and Drake's to Winfrey, and praying that her title to "said undivided half of said property" be quieted, and for partition. Upon this bill a decree was rendered September 12, 1873, which found the purchase by Mrs. Buck of Shepard, April 24, 1868, of an undivided half of the lands, and the subsequent purchase by Buck of the other half, and Buck's sale and conveyance of "his half of said land" to Drake, and quieted Mrs. Buck's title to an undivided half.

Shepard derived title to the lands through a purchase under a deed of trust given by Henry J. Johnson to one Tate, and by mistake one parcel was omitted from the trust deed, and the mistake had been inadvertently carried through all the successive conveyances down to the Bucks. In 1872, Randolph, a judgment creditor of Johnson, had caused an execution to be levied on the omitted parcel, and Mrs. Buck and Drake filed a bill in the Desha Circuit Court against Randolph, Winfrey and others, to enjoin sale upon the execution, correct the mistake, quiet the title, and compel Winfrey to complete his purchase. Pending the suit, Mrs. Buck changed her name by intermarriage with

Blackburn, who was made a party, and subsequently died.

This case went to decree, dismissing the bill, from which an appeal was prosecuted to the Supreme Court of Arkansas, the decision of which tribunal is reported under the title, *Blackburn* v. *Randolph*, in 33 Ark. 119. The opinion, after setting forth Shepard's title, states [467] that he sold "an undivided half of the lands to complainant S. S. Buck, and still later the other undivided half to her husband, W. A. Buck, since deceased, but who in his lifetime sold his interest to complainant Drake, who afterwards sold to Winfrey." The decree of the circuit court was reversed, and a decree entered in the supreme court, at the November Term, 1878, "vesting in complainant Sallie S. Blackburn and defendant J. T. Winfrey all the legal and equitable title in and to said plantation that was in Henry J. Johnson at the time of the execution of the deed of trust to said Tate." It appears, also, from the report of this case, that Johnson had given a mortgage on the land to one Graddy, who filed a bill to foreclose it, setting up the sale to Shepard and his sale to W. A. and Sallie S. Buck, who were made parties, and that a decree was rendered in said cause, October 28, 1869, confirming the title to said lands in Buck and wife under said purchases.

In the conveyance by Buck and wife to Drake, January 2, 1869, it is provided that if any recovery is had in the suit of Graddy against Johnson, and "it results as an incumbrance upon this property, the first party are only liable to the extent of their one half interest in said lands, and the second party takes subject to this liability."

During 1878 Winfrey filed his voluntary petition in bankruptcy in the United States District Court for Middle Tennessee, scheduling half of the lands among his assets, and the register in bankruptcy conveyed, November 1, 1878, to Harry Harrison, Winfrey's assignee. The property was sold and conveyed by the assignee to Weatherford, January 30, 1880, and Weatherford conveyed to Clarence P. Hunt, July 11, 1880.

Weatherford testifies that Mrs. Buck informed him that she had been told she could "beat Mr. Drake out of any interest in the place," but had replied "that she did not wish to beat him out of it, as her husband had sold to him in good faith; all she wanted was to have him settle in accordance with the agreement made in her husband's lifetime;" and Weatherford commended her reply, and told her he did not think "she could beat Drake if she were to [468] try." Exactly when this conversation took place is not clearly made out, but the evidence tends to show that it was in 1871 or 1872, and before March 11, 1872, the date of the commencement of the suit of Mrs. Buck against Buck's heirs. Weatherford had drawn the original conveyance from Shepard, recognizing, as he believes, the separate interests; and Weatherford acted as solicitor for Drake and Mrs. Buck, afterwards Blackburn, in the litigation which resulted in the decree by the Supreme Court of Arkansas, and for Mrs. Buck in that against Buck's heirs, which went to decree in the Desha County Circuit Court. Originally Mrs. Buck's attorney, he had as time went on become Drake's attorney; and it was as such that he purchased the property at the assignee's sale, and then sold and conveyed to Hunt at Drake's request, receiving himself only the amount of his charges, but Drake receiving acquittance of several thousand dollars which Hunt had advanced to him upon the strength of Drake's interest in the property, in respect to which Weatherford had advised Hunt that it was ample to insure him against loss.

Weatherford was not, at this time, acting as Mrs. Blackburn's attorney. She had resorted to another professional adviser in relation to her interest in the land in 1876, who died in 1878, when she consulted his surviving partner. So far as appears, Weatherford had no knowledge or information which would have led him to suppose, up to June, 1880, when he conveyed to Hunt, that Mrs. Blackburn was determined to claim the whole land as her own.

In 1875 Mrs. Blackburn wrote Weatherford: "It is Mr. Drake's half of the place that has been sold for taxes, and not mine. I think Mr. Winfrey has given up all idea of having anything to do with the place, as they have all left here, and I am in possession and never intend to give it up until Drake and Winfrey settle, and I know to a certainty who it belongs to, so I can have a permanent division. I am having rails made, so as to fence my half when I know where it is."

This letter and some others in the record were apparently written to Weatherford as a friend rather than as an attorney; but a motion was made on behalf of Mrs. Blackburn to suppress Weatherford's depositions, of which there [469] were two, and the letters, upon the ground that the former related to matters communicated to Weatherford in confidence as her attorney, and that the letters were equally confidential.

Mr. **J. B. Heiskell,** for appellant:

Mrs. Buck's act in joining in the sale, her statements in her two bills, her parol statement to Weatherford, and her letters to him, acted upon by appellant Hunt, form an estoppel *in pais*.

Stowe v. *U. S.* 86 U. S. 19 Wall. 18 (22:144); *Morgan* v. *Chicago & A. R. Co.* 96 U. S. 716 (24:743), citing *Bank of U. S.* v. *Lee*, 38 U. S. 13 Pet. 107 (10:81); *Merchants Bank* v. *State Bank*, 77 U. S. 10 Wall. 604 (19:1008). See also Illinois cases cited in same case; *Baker* v. *Humphrey*, 101 U. S. 494 (25:1065); *Dickerson* v. *Colgrove*, 100 U. S. 578 (25:618); *Ogilvie* v. *Knox Ins. Co.* 63 U. S. 22 How. 380 (16:349); *Laughlin* v. *Mitchell*, 121 U. S. 411 (30:987).

The law of Arkansas is in strict accord with the general rule on the subject of estoppel.

Trapnall v. *Burton*, 24 Ark. 399; *Shall* v. *Biscoe*, 18 Ark. 164; *Ryburn* v. *Pryor*, 14 Ark. 505; *Bramble* v. *Kingsbury*, 39 Ark. 131; *Gill* v. *Hardin*, 48 Ark. 409.

(No counsel appeared for appellees.)

Mr. Chief Justice **Fuller** delivered the opinion of the court:

Undoubtedly, at common law, husband and wife did not take, under a conveyance of land to them jointly, as tenants in common or as joint tenants, but each became seised of the entirety, *per tout, et non per my;* the consequence of which was that neither could dispose of any part without the assent of the other, but the

whole remained to the survivor under the original grant. 2 Bl. Com. 182; 2 Kent, Com. 118; 1 Washb. Real Prop. 4th ed. 672. Nor had this rule been changed at the time of these transactions by the Constitution or statutes of Arkansas. *Robinson* v. *Eagle*, 29 Ark, 202. But it was also true at common law that, as "In point of fact, and agreeable to natural reason, free from artificial deductions, the husband and wife are distinct and individual persons, when lands are granted to them as tenants in common, thereby treating them without any respect to their social union, they will hold by moieties, as other distinct and individual persons would do." 1 Preston, Estates, p. 132; 1 Inst. 187 b; 1 Washb. Real Prop. 4th ed. p. 674; *McDermott* v. *French*, 15 N. J. Eq. 80.

The Supreme Court of Arkansas and the Circuit Court of Desha County must have proceeded upon the conclusion that Buck and his wife held by moieties, in decreeing that, through their conveyance, Drake and Winfrey became the owners in fee, successively, of Buck's undivided half of the lands in question; and the decrees of these two courts to that effect, standing unreversed, would seem to be binding adjudications in favor of complainant's title.

[470] In the circuit court case Mrs. Buck sought and obtained a decree quieting her title to an undivided half, as between her and Buck's heirs and Drake, Buck's grantee, and holding a tax title to have been acquired for the benefit of Drake and herself, and she is to be held to have embraced her whole cause of action in one suit. In the supreme court case she had joined with Drake, in seeking relief as co-owners, against an execution sale of a parcel of the land, the rectification of a mistake in the deeds, and the vesting of title in herself and Drake, and the compelling Winfrey to accept title to the Drake half; and that relief was in substance accorded by the decree.

Under such circumstances it cannot be denied that Hunt was justified in advancing his money upon the strength of the Drake, Winfrey title.

Defendant Blackburn insists, however, in her answer, that the part she took in the litigation of these two cases was the result of misplaced confidence in her counsel, by whom she alleges she was deceived, misadvised and misled; that she was ignorant of her rights, and that she ought not to be held estopped in the premises; while at the same time it is objected, on her behalf, that her attorney, on the ground of privileged communications, should not be permitted to defend himself by testifying to the facts and circumstances under which he advised her and the advice which he actually gave.

The rule which places the seal of secrecy upon communications between client and attorney is founded upon the necessity, in the interest and administration of justice, of the aid of persons having knowledge of the law and skilled in its practice, which assistance can only be safely and readily availed of when free from the consequences or the apprehension of disclosure. But the privilege is that of the client alone, and no rule prohibits the latter from divulging his own secrets. And if the client has voluntarily waived the privilege, it cannot be insisted on to close the mouth of the attorney. When Mrs. Blackburn entered upon a line of defense which involved what transpired between herself and Mr. Weatherford, and respecting which she testified, she waived her right to object to his giving his own account of the matter. As, for instance, when she says that the original deed from Shepard was drawn by Weatherford; that she has not got it, and that she thinks she gave it to him, it is clear that her letter of July 6, 1875, calling for that deed, and Weatherford's reply of July 14, inclosing it, are admissible in evidence. [471]

But, apart from Weatherford's evidence, the testimony of Mrs. Blackburn and Drake, together with the documents in the case, fail to satisfy us that there was any deceit or misapprehension in the premises, or any advice given Mrs. Blackburn in fraud or in mistake of fact or law. Buck and his wife purchased the separate halves at different times, and with the intent of holding in moieties, and conveyed Buck's half to Drake, who paid therefor in good faith, and without actual notice. The second deed of Shepard was so drawn as to run directly to Buck and wife, and upon the language in which it was couched this claim is set up. And yet that second deed was given, on request of Drake's attorney, at the very time when Buck and his wife were conveying to Drake for valuable consideration. The injustice of allowing Mrs. Blackburn to insist, years afterwards, that by that deed she acquired an estate by entirety is too apparent to need comment. Nor could such deed devest the title which had once vested in her husband and herself by the former conveyance from the same grantor, nor alter its nature.

The decree will be reversed and the cause remanded for further proceedings in conformity with this opinion. *Decree reversed.*

HENRY R. DENNY, *Plff. in Err.*, [489]

v.

CHARLES C. BENNETT, Assignee of A. B. VAN NORMAN & BRO.

(See S. C. Reporter's ed. 489-503.)

Statute impairing contracts—state law, when valid—constitutional construction—Minnesota Insolvent Law—does not discharge debt of citizen of another State—decision of motion, not res judicata.

1. State statutes, limiting the right of a creditor to enforce his claims against the property of his debtor, which are in existence at the time a contract is made, are not void as impairing the obligation of the contract.

2. The inhibition of the Constitution against impairing the obligation of contracts is wholly prospective; the States may legislate, as to contracts thereafter made, as they see fit. It is only those in existence when the hostile law is passed that are protected from its effect.

3. The established construction of the Constitution of the United States against impairing the obligation of contracts requires that statutes of this class shall be construed to be part of all contracts made when they are in existence, and therefore cannot be held to impair their obligation.

4. The Minnesota Statute of March 7, 1881, chap. 148, which provides that whenever the property of a debtor is seized by an attachment or execution against him, he may make an assignment of all his property for the equal benefit of all his creditors who shall file releases, and such property shall be equitably distributed among such creditors, is not

repugnant to the Constitution of the United States so far as it affects citizens of States other than Minnesota.

5. A statute of a State, being without force in any other State, cannot discharge a debtor from a debt held by a citizen of such other State who does not appear and take part in the proceedings, or is not otherwise brought within the jurisdiction of the court granting the discharge.

6. The decision of a motion or summary application is not to be regarded in the light of *res judicata*, or as so far conclusive upon the parties as to prevent their drawing the same matters in question again in the more regular form of an action.

[No. 67.]

Argued Nov. 8, 1888. Decided Nov. 26, 1888.

IN ERROR to the Supreme Court of the State of Minnesota, to review a judgment in favor of an assignee for benefit of creditors, for damage for conversion of the assigned property. *Affirmed.*

The facts are stated in the opinion.

Mr. **C. D. O'Brien,** for plaintiff in error:

An assignment for the benefit of creditors can be attacked for the concurring fraud of the assignors and assignee.

Locke, Attach. 522, § 240 and cases cited; *Hutchinson* v. *Lord*, 1 Wis. 286; *Bogert* v. *Phelps*, 14 Wis. 95; *Thayer* v. *Willet*, 5 Bosw. 344, 354; *Fallon* v. *McCunn*, 7 Bosw. 141; *Hall* v. *Stryker*, 27 N.Y. 596, 600; *Damon* v. *Bryant*, 2 Pick. 411; *Pratt* v. *Wheeler*, 6 Gray, 520; *Owen* v. *Dixon*, 17 Conn. 492, 497, 498.

The law itself is so framed that it does impair the obligation of contracts.

Gilman v. *Lockwood*, 71 U. S. 4 Wall. 410 (18:432); *Ogden* v. *Saunders*, 25 U. S. 12 Wheat. 213 (6:606); *Sturges* v. *Crowninshield*, 17 U. S. 4 Wheat. 122 (4:529); *Baldwin* v. *Hale*, 68 U. S. 1 Wall. 223 (17:531).

Mr. **Ambrose N. Merrick,** for defendant in error:

No federal question is involved.

Re Mann, 32 Minn. 60; *Simon* v. *Mann*, 33 Minn. 412; *Bennett* v. *Denny*, Id. 530.

The constitutionality of the Minnesota Assignment or Bankrupt Act of 1881 has been sustained, not only by the Supreme Court of Minnesota, but also by the federal courts.

Mather v. *Nesbit*, 13 Fed. Rep. 872; *Weston* v. *Loyhed*, 30 Minn. 222; *Wendell* v. *Lebon*, Id. 234; *Sloane* v. *Chiniquy*, 22 Fed. Rep. 213.

From the time of the execution and filing of the assignment by the Van Normans the property was *in custodia legis.*

Kingman v. *Barton*, 24 Minn. 295; *Swart* v. *Thomas*, 26 Minn. 143; *Re Mann*, 32 Minn. 60.

Property *in custodia legis* could not be levied upon by the United States Marshal.

Drake, Attach. §§ 251, 267, 5th ed.; Murfree, Sheriffs, § 269; *Re Mann*, 32 Minn. 60.

The same contingency which would dissolve an attachment in the state court would also dissolve it under the federal laws.

U. S. R. S. § 933; *Mather* v. *Nesbit*, 13 Fed. Rep. 872; *Simon* v. *Mann*, 33 Minn. 412; *Wendell* v. *Lebon*, 30 Minn. 240.

The holding of the court that the defendant in error had mistaken his remedy in moving to dissolve the attachment is no bar to this action.

Abbott, Tr. Ev. 830, § 11; *Marsh* v. *Armstrong*, 20 Minn. 81.

Mr. Justice **Miller** delivered the opinion of the court:

This is a writ of error to the Supreme Court of the State of Minnesota. [491]

The principal point raised by the assignments of error is that an Act of the Legislature of that State, approved March 7, 1881, chap. 148, is repugnant to the Constitution of the United States, so far as it affects citizens of States other than Minnesota. That statute provides that whenever the property of a debtor is seized by an attachment or execution against him he may make an assignment of all his property and estate not exempt by law for the equal benefit of all his creditors who shall file releases of their debts and claims, and his property shall be equitably distributed among such creditors.

This is the only assignment of error (with the exception of one other, which will be considered farther on) that, by any fair construction, can be said to come within the jurisdiction of this court, though others are set out in the brief of counsel, relative to fraud in the assignment made by the debtors in this instance, which raise no federal question.

The facts may be briefly stated as follows: on the 31st day of December, 1883, J. H. Purdy & Co. brought a suit in the Fourth Judicial District Court of Hennepin County, in the State of Minnesota, against Axel B. Van Norman and Gustave Van Norman, partners, under the firm name of Van Norman & Brother, and on the same day procured a writ of attachment to issue [492] in that suit, which was levied upon a part of the goods of the defendants. On the same day that firm made a deed of assignment to Charles C. Bennett, the present defendant in error, reciting the issue and levy of this attachment, and assigning to him "all the lands, tenements, hereditaments and appurtenances, goods, chattels, choses in action, claims, demands, property and effects of every description" belonging to them, wherever situated. The instrument also provided that the assignee was "to take possession of the property, and to sell and dispose of the same with all reasonable diligence, and to convert the same into money; and, also, to collect all such debts and demands hereby assigned as may be collectible, and with and out of the proceeds of such sales and collections to pay and discharge all the just and reasonable expenses, costs and charges of executing the assignment," including a reasonable compensation to the assignee for his services.

The assignment then directs the assignee to proceed as follows:

"To pay and discharge in full, if the residue of said proceeds be sufficient for that purpose, all the debts and liabilities now due, or to become due, from said party of the first part to all their creditors who shall file releases of their debts and claims against the said party of the first part, as by law provided, together with all interest due, and to become due thereon; and if the residue of said proceeds shall not be sufficient to pay said debts and liabilities and interest in full, then to apply the same, so far as they will extend, to the payment of the said debts and liabilities and interest proportionably to their respective amounts, and in accordance with the statute in such case made and provided; and if, after payment of all the costs, charges and expenses attending the execution of said trust, and the payment and discharge in full of all the said lawful debts owing by the said party of the first

part, there shall be any suplus of the said proceeds remaining in the hands of the party of the second part, then to repay such surplus to the party of the first part, their executors, administrators, or assigns."

It appears that the goods and chattels mentioned in this deed of trust were, under its authority, delivered to Bennett, the assignee, or partly so, the sheriff having closed the doors of the store in which they were situated, at the time that Denny, the plaintiff in error, seized them by virtue of a writ of attachment issued out of the Circuit Court of the United States for the District of Minnesota, of which he was marshal, in a suit brought by Lapp & Flershem against the firm of Van Norman & Brother. The latter action was also commenced on the 31st day of December, 1883. On January 21, 1884, after a refusal by the marshal to deliver the goods, Bennett, the assignee, made application in the United States Circuit Court to be made a party to the suit of Lapp & Flershem against Van Norman & Brother, and prayed for the dissolution of the attachment issued in favor of the plaintiffs therein. The court, on February 18, 1884, made the following order: "First. That Charles C. Bennett, assignee, do have, and he is hereby given, leave to intervene and become a party defendant herein. Second. That the motion to dissolve the attachment be, and the same is, hereby denied." Although the assignee was thus permitted to come in and be made a party, it is not shown that he ever did so, or ever appeared in the case after that time.

There is no further record in this case of any proceedings in the Circuit Court of the United States, nor in the action of *Purdy & Co.* v. *Van Norman & Brother;* but the transcript then proceeds with the suit brought by the assignee against the marshal, Henry R. Denny, in the nature of trover and conversion, for damages on account of his unlawful seizure of these same goods while they were in the hands of said assignee, and for a conversion of the same by his refusal to return them to plaintiff. This suit was decided in favor Bennett, the assignee, in the lower court, by a verdict of a jury; and upon the judgment being carried by a writ of error to the Supreme Court of the State of Minnesota it was there affirmed. In both of these courts the questions we have mentioned were raised by exceptions to the charge of the judge that the assignment was a valid one, and to the ruling that the decision of the Circuit Court of the United States on the motion to dissolve the attachment was not a bar to the present action by the assignee.

The question of the invalidity of this Minnesota Statute, as it relates to the rights of creditors, is an interesting one. The argument in favor of that proposition is twofold: first, that it impairs the obligation of contracts; and second, that such a statute can have no extraterritorial operation, and cannot, therefore, be binding on creditors living in a different State from that of the debtor and of the *situs* of his property.

With regard to the first of these it may be conceded that, so far as an attempt might be made to apply this statute to contracts in existence before it was enacted, it would be liable to the objection raised, and therefore in such a case of no effect. But the doctrine has been long settled that statutes limiting the right of the creditor to enforce his claims against the property of the debtor, which are in existence at the time the contracts are made, are not void, but are within the legislative power of the States where the property and the debtor are to be found. The courts of the country abound in decisions of this class, exempting property from execution and attachment, no limit having been fixed to the amount—providing for a valuation at which alone, or generally two thirds of which, the property can be brought to a forced sale to discharge the debt—granting stays of execution after judgment, and in numerous ways holding that, as to contracts made after the passage of such laws, the legislative enactments regulating the rights of the creditors in the enforcement of their claims are valid. These statutes, exempting the homestead of the debtor, perhaps with many acres of land adjoining it; the books and library of the professional man, the horse and buggy and surgical implements of the physician, or the household furniture, horses, cows and other articles belonging to the debtor, have all been held to be valid, without reference to the residence of the creditor, as applied to contracts made after their passage.

The principle is well stated in the case of *Edwards* v. *Kearzey*, 96 U. S. 595 [24: 793] in the following language:

"The inhibition of the Constitution is wholly prospective. The States may legislate as to contracts thereafter made, as they may see fit. It is only those in existence when the hostile law is passed that are protected from its effect."

See also *Mississippi & M. Railroad Company* v. *Rock*, 71 U. S. 4 Wall 177 [18: 381]; *Northwestern University* v. *People*, 99 U. S. 309 [25: 387]; *Knox* v. *Exchange Bank*, 79 U. S. 12 Wall. 379 [20: 287, 414].

The doctrine was very early announced in the case of *Wales* v. *Stetson*, 2 Mass. 143; and in the separate opinion of *Mr. Justice* Story in *Dartmouth College* v. *Woodward*, 17 U. S. 4 Wheat. 518 [4: 629] decided in 1819, it was suggested that in a grant of a charter to a corporation a reservation of the right to repeal it would be valid. This has been acted upon, and such action has been held in many cases to be valid.

The later case of *Greenwood* v. *Union Freight Railroad Company*, 105 U. S. 13 [26: 961] contains a review of this whole subject, so far as contracts are concerned.

No reason has been suggested why the Legislature could not exempt all interests in landed estate from execution and sale under judgments against the owner, and perhaps all his personal property. However this may be, it is very certain that the established construction of the Constitution of the United States against impairing the obligation of contracts requires that statutes of this class shall be construed to be parts of all contracts made when they are in existence, and therefore cannot be held to impair their obligation.

The Act in question in the present case does not exceed many of the class to which we have alluded in its effect in enabling the debtor to dispose of his property without regard to the ordinary judicial proceedings to subject it to

forced sale. The power is conceded, when not forbidden by the statutes of a State, to a failing debtor to make a general assignment of his property for the benefit of his creditors, as this one does. It is further admitted that in such an assignment, if there be nothing fraudulent otherwise, he can prefer some creditors over others, and that he can secure to some payment in full while he leaves others who will certainly get nothing out of his estate. When this is done the creditors who are not provided for in the assignment are left in a worse condition [496] than they are where it is done under the present law; because in the first instance they would certainly get nothing out of the debtor's property, though they would retain a right to proceed against him by a judgment and execution, while in the present case they have the option of pursuing that course, or of coming in with the other creditors, executing releases, and obtaining their share of the property assigned. Here, instead of naming the preferred creditors, the assignor gives his property to all who will execute a release of their claims against him. Nobody is required by the statute to do so unless he thinks it is to his interest. The creditor who executes such a release gets his share of the property assigned, while the one who does not receives nothing, unless there may be a surplus left after the payment of the releasors, but he is not hindered or delayed in obtaining a judgment against the debtor, or in levying upon any other property, if such can be found, not conveyed by the instrument, or upon any afterwards acquired by the debtor. The latter remains liable, notwithstanding this statute and this assignment, as he always was, for the debt of the nonassenting creditor.

It is not easy, then, to see how this statute can be more complained of as impairing the obligation of contracts than the statutes of exemption which we have already mentioned, and the principles which lie at the foundation of all voluntary assignments for the benefit of creditors with preferences that exhaust the fund assigned.

But it is said in answer to this view of the subject that there is a clause in the instrument now before us directing that if there shall be a surplus after the payment in full of all the creditors who shall release the assignors it shall be paid over to the latter. There are two answers to this. If that clause or provision is unlawful and violates the laws of the State of Minnesota, or the Constitution of the United States, it can be rejected, and the remainder of the assignment permitted to stand. The statute under which the assignment was made does not require that such surplus shall be paid over to the debtors. The supreme court of that State has held that such a fund may be ar- [497] rested when proper proceedings are had before it gets to the debtor's hands, and, certainly, wherever that surplus may be found, and however it may be got at by any of the processes of law, it is liable to be taken by the nonreleasing creditor. He can pursue all the remedies which the law gives him as against any fund, property, chose in action, or estate liable to the payment of his demand.

But it is said that this Statute of Minnesota is void under the principles laid down by this court in the cases of *Sturges* v. *Crowninshield*, 17 U. S. 4 Wheat 122 [4:529]; *Ogden* v. *Saunders*, 25 U. S. 12 Wheat. 213 [6: 606]; *Baldwin* v. *Hale*, 68 U. S. 1 Wall. 223 [17: 531] and *Gilman* v. *Lockwood*, 71 U. S. 4 Wall. 409 [18: 432]. The proposition lying at the foundation of all these decisions is that a statute of a State, being without force in any other State, cannot discharge a debtor from a debt held by a citizen of such other State. One of the best statements of the doctrine is found in the following language used in the latest case on the subject, that of *Gilman* v. *Lockwood*, *supra*.

"State Legislatures may pass insolvent laws, provided there be no Act of Congress establishing a uniform system of bankruptcy conflicting with their provisions, and provided that the law itself be so framed that it does not impair the obligation of contracts. Certificates of discharge, however, granted under such a law, cannot be pleaded in bar of an action brought by a citizen of another State in the Courts of the United States, or of any other State than that where the discharge was obtained, unless it appear that the plaintiff proved his debt against the defendant's estate in insolvency, or in some manner became a party to the proceedings. Insolvent laws of one State cannot discharge the contracts of citizens of other States; because such laws have no extraterritorial operation; and consequently the tribunal sitting under them, unless in cases where a citizen of such other State voluntarily becomes a party to the proceeding, has no jurisdiction of the cause."

This is conceived to be a clear and accurate presentation of the doctrine of the preceding cases, and it will be seen that the substance of the restrictive principle goes no farther that to prohibit or to make invalid the discharge of a debt held by a citizen of another State than that where the court is sitting, who does not appear and take part, or is not otherwise brought within the jurisdiction of the court [498] granting the discharge. In other words, whatever the court before whom such proceedings are had may do with regard to the disposition of the property of the debtor, it has no power to release him from the obligation of a contract which he owes to a resident of another State, who is not personally subjected to the jurisdiction of the court. Anyone who will take the trouble to examine all these cases will perceive that the objection to the extraterritorial operation of a state insolvent law is that it cannot, like the Bankrupt Law passed by Congress under its constitutional grant of power, release all debtors from the obligation of the debt. The authority to deal with the property of the debtor within the State, so far as it does not impair the obligation of contracts, is conceded; but the power to release him, which is one of the usual elements of all bankrupt laws, does not belong to the Legislature where the creditor is not within the control of the court.

The Minnesota Statute makes no provision for any such release. The creditor who became such after the statute was passed cannot complain that the obligation of his contract is impaired, because the law was a part of the contract at the time he made it; nor can he say that his contract is destroyed and the debtor discharged from it, which is of the essence

of a bankrupt law, because no such decree can be made by the court, neither does the law have any such effect, though the obligation of the debtor to pay may be canceled or discharged by the voluntary act of the creditor who makes such release for a consideration which to him seems to be sufficient.

The other assignment of error, pressed by counsel for plaintiff in error, that the proceedings in the Circuit Court of the United States, in relation to the dissolution of the attachment and Bennett's becoming a party to the suit there pending, are an estoppel of the claim now set up by him, is not in our opinion entitled to much consideration. The order of the court in relation to that matter, above quoted, merely gave leave to the assignee to become a party to that suit, at the same time overruling the other branch of the motion asking for a dissolution of the attachment. It does not appear [499] by the record that Bennett ever did make himself a party to that suit, and of course could be bound by no judgment rendered in regard to it. Even if he can be supposed to be a party, so far as the motion to dissolve the attachment is concerned, we concur with the Supreme Court of the State of Minnesota (*Bennett* v. *Denny*, 33 Minn. 530) in holding that "It was merely a decision of a motion or summary application, which is not to be regarded in the light of *res adjudicata*, or as so far conclusive upon the parties as to prevent their drawing the same matters in question again in the more regular form of an action." For this they cite the decisions of their own court.

In aid of this view of the subject we may also refer to the opinion of *Judge* Nelson in deciding the motion to dissolve. After reciting the circumstances under which that motion was made, he said:

"It is by virtue of this seizure that the marshal holds the property. On this statement of the facts I shall not decide on this motion who has the better title and right to the possession of the property taken . . . The writ of attachment properly issued in this suit against the debtor; and if the marshal has seized the property which belonged to Bennett, he is certainly liable in an action of trespass for the damages thereby sustained." *Lapp* v. *Van Norman*, 19 Fed. Rep. 406. See *Buck* v. *Colbath*, 70 U. S. 3 Wall. 334 [18: 257].

It is therefore clear that the order of the judge refusing to dissolve the attachment was not predicated upon any decision as to the right of the possession of the property, but that he intended to leave the marshal liable to the present action, if the facts justified the claim of the assignee. Apart from this we are not at all satisfied that the effect of this action of the circuit court on the suit afterwards brought by the assignee in the state court is a question of federal cognizance. Its decision, as shown by the opinion of *Judge* Nelson, was not based upon any law or principle of federal jurisprudence, and must have rested upon the general rules which govern the conclusiveness of former judicial proceedings when called in question in another case.

The judgment of the Supreme Court of Minnesota is affirmed.

Mr. Justice **Harlan**, dissenting: [500]

I cannot assent to a judgment of affirmance in this case.

1. The Statute of Minnesota of 1881, upon which the defendant in error rests his suit for damages, provides, among other things: "Whenever the property of any debtor is attached or levied upon by any officer, by virtue of any writ or process issued out of a court of record of this State in favor of any creditor or garnishment made against any debtor, such debtor may, within ten days after the levying of such attachment, process, or garnishment shall have been made, make an assignment of all his property and estate, not exempt by law, for the equal benefit of all his creditors, in proportion to their respective valid claims, who shall file releases of their debts and claims against such creditors as hereinafter provided . . . and, upon the making of such assignment, all attachments, levy or garnishment so made shall be dissolved upon the appointment and qualification of an assignee or receiver; and thereupon the officers shall deliver the property attached or levied upon to such assignee or receiver, unless the assignee shall, within five days after such assignment, file in the office of the clerk of the court where such attachment was issued or judgment was rendered a notice of his intention to retain such attachment, levy or garnishment, in which case any such attachment, levy or garnishment shall inure to the benefit of all the said creditors, and may be enforced by the assignee by his substitution in the action as such in the same manner as the plaintiff might have enforced the same had such assignment not been made; *Provided, however*, That this section shall not apply to cases where an execution has been issued upon a judgment in an action where the complaint has been filed in the office of the clerk of the court twenty days prior to the entry of the judgment."

This statute did not operate to dissolve the attachment which issued from the Circuit Court of the United States in favor of Lapp & Flershem; for it applies only to writs or process issued out of "a court of record of this State," that is, a court of record established under the Constitution and laws of Minnesota. If in- [501] tended to embrace writs of attachment from a court of the United States, so as to vacate levies under such writs, without an order to that effect by the court under whose authority they were made, it would be inoperative. No state enactment can, *proprio vigore*, work the dissolution of an attachment issuing from a federal court.

A different construction is inadmissible upon other grounds. By the 10th section of the statute it is provided that "No creditor of any insolvent debtor shall receive any benefit under the provisions of this Act, or any payment of any share of the proceeds of the debtor's estate, unless he shall have first filed with the clerk of the district court, in consideration of the benefits of the provisions of this Act, a release to the debtor of all claims other than such as may be paid under the provisions of this Act, for the benefit of such debtor, and thereupon the court or judge may direct that judgment be

entered discharging such debtor from all claims or debts held by creditors, who shall have filed such releases." If this Act is to control the rights of the parties in the present case, the result is that the prior right acquired by Lapp & Flershem under their suit and attachment in the federal court is taken from them, and they are denied all interest in the proceeds as well of the property attached for their benefit as of the property assigned to Bennett, unless they give a release in full to their debtors. Such a result is not, in my judgment, consistent with the rights secured by the Constitution of the United States to the plaintiffs in error.

2. There is some misapprehension as to the time when the assignment to Bennett was actually made. But it is clear from the evidence that the marshal levied before he acquired any right in the property attached by that officer. In the brief filed in behalf of Bennett in the circuit court, in support of his application to be made a party in the suit of Lapp & Flershem against Van Norman & Bro., in order that he might assert his claim, as assignee, to the goods seized by the marshal, and in support also of his motion to dissolve the attachment sued out by Lapp & Flershem—which brief is part of the record before us—it is said: "The [502] court will bear in mind that the assignment was not made and filed until some three hours *after* the levy of the attachment by the plaintiffs [Lapp & Flershem]." And in the opinion of the Supreme Court of Minnesota in this case, it is said: "It seems that *prior to the making of the assignment in question* the defendant, as United States Marshal, by virtue of process of the circuit court, *had attached* the assigned property." As the federal court had jurisdiction of the suit in which was issued the attachment that came to the hands of the marshal, the goods seized by the latter were from the moment of such seizure, in the custody of that court, so far, at least, as to prevent the *possession* of the marshal from being disturbed by an action of replevin in behalf of Bennett. *Freeman* v. *Howe*, 65 U. S. 24 How. 450 [16: 749]; *Buck* v. *Colbath*, 70 U. S. 3 Wall. 334 [18: 257]; *Krippendorf* v. *Hyde*, 110 U. S. 276 [28: 145]; *Covell* v. *Heyman*, 111 U. S. 176 [28: 390]; *Gumbel* v. *Pitkin*, 124 U. S. 145 [31: 374]. It was said in *Lammon* v. *Feusier*, 111 U. S. 19 [28: 337], that even where a marshal takes the property of a person not named in the writ, "the property is in his official custody, and under the control of the court whose officer he is, and whose writ he is executing;" and that "according to the decisions of this court the rightful owner cannot maintain an action of replevin against him, nor recover the property specifically in any way, except in the court from which the writ is issued."

3. If Bennett's right to the possession of the property covered by the assignment to him had accrued before the marshal made his levy, the latter might have been liable in trespass or in trover and conversion in any court of competent jurisdiction as to parties. Here, however, the attachment which came to the hands of the marshal was lawfully issued and was rightfully levied. That is conceded on all sides. Was it for that officer to pass upon the validity of a claim which accrued, if at all, subsequently to his taking the goods into his possession? His writ commanded him to take the goods of Van Norman & Bro.; and he did so. He was also commanded to safely keep them to satisfy the demand of Lapp & Flershem. Could he be discharged from his obligation to so keep them except by an order of the court under whose direction he had proceeded? Indeed, if he had surrendered possession, without leave first obtained from the [503] federal court, he could have been proceeded against for contempt in having parted with the possession of goods in the custody of that court. Bennett asked leave to intervene in the suit in the federal court, and such leave was granted; but he declined to exercise the privilege accorded to him. He moved, at the same time, to dissolve the attachment, and that motion was denied; the federal court thereby plainly indicating to the marshal a purpose to hold the property until it had adjudicated Bennett's claim. If Bennett had intervened in the suit in the federal court, and if that court had dismissed his intervention, or adjudged his claim to be subordinate to that of Lapp & Flershem under their attachment, he could have prosecuted an appeal to this court. *Gumbel* v. *Pitkin*, 113 U. S. 545 [28: 1128].

A marshal who levies an attachment from a Circuit Court of the United States in a suit of which he has complete jurisdiction, upon goods subject at the time to such attachment, is not, I think, liable in trover and conversion for their value, upon his refusal, in the absence of any direction of the court under whose writ they were seized, to surrender possession; especially to one whose right, if any, accrued subsequently to his levy. To hold him, under such circumstances, liable to a suit in a state court for damages, is to invite those conflicts between courts of different jurisdictions and their respective officers, which the former decisions of this court have sought to prevent.

---

[474]

THE GAZELLE AND CARGO.

FREDERICK MEISSNER *et al.*, *Appts.*, *v.* HERMAN BRUN.

(See S. C. Reporter's ed. 474–487.)

Review in admiralty causes—charter-party—Construction of—weight of evidence—findings—custom—shipowner, when entitled to freight—relief, what granted.

1. A review of the decrees of the circuit court in admiralty causes is limited to a determination by this court of the questions of law arising upon the record and to such rulings of the circuit court, excepted to at the time, as may be presented by a bill of exceptions.

2. A clause in a charter-party by which the charterers are bound to order the vessel "to a safe, direct Norwegian or Danish port, or as near thereunto as she can safely get and always lay and discharge afloat," means that the vessel must be ordered to a port which she can safely enter with her cargo, or which at least has a safe anchorage outside where she can lie and discharge afloat.

3. The charterers cannot order the vessel to a port having a bar across its mouth, which it is impossible for the vessel to pass either in ballast or with cargo, where the only anchorage outside the bar is not reasonably safe for the vessel to lie and discharge.

4. This court in an admiralty appeal has no authority to pass upon the comparative weight of conflicting evidence.

5. A positive finding by the circuit court, that such anchorage was unsafe, is not controlled by other statements therein (which are rather recitals of the evidence than findings of fact) that large steamers and other vessels had discharged their cargoes at that anchorage without disaster.

6. Evidence of a custom to consider as safe a particular port which in fact is not reasonably safe, which would directly contradict the charter-party, is incompetent.

7. A ship owner, who is prevented from performing the voyage by a wrongful act of the charterer, is *prima facie* entitled to the freight that he would have earned, less what it would have cost him to earn it.

8. In the Courts of Admiralty of the United States, if a libelant propounds with distinctness the substantive facts upon which he relies, and prays, either specially or generally, for appropriate relief, the court may award any relief which the law applicable to the case warrants.

[No. 78.]

Argued Nov. 9, 12, 13, 1888. Decided Nov. 26, 1888.

APPEAL from a decree of the Circuit Court of the United States for the District of Maryland in admiralty, on cross libel for breaches of a charter-party sustaining the libels of the master and dismissing that of the charterers of the Norwegian Barque, Gazelle, and awarding damages to the master for breach of the charter-party. *Affirmed.*

[475] Statement by *Mr. Justice* **Gray**:

This was an appeal from a decree in admiralty on cross libels for breaches of a charter-party of the Norwegian Barque, Gazelle, by which, on June 16, 1881, Herman Brun, her master, chartered her to Meissner, Ackermann & Co. for a voyage from Baltimore "to a safe, direct, Norwegian or Danish port, as ordered on signing bills of lading, or as near thereunto as she can safely get and always lay and discharge afloat," on the terms, among others, that the charterers should furnish a full cargo of refined petroleum in barrels, and pay freight of three shillings and three pence sterling a barrel; that the vessel should be loaded by July 6, and that demurrage of eleven pounds sterling should be allowed for each day's detention by their default.

On July 11 and August 1, 9 and 22, the master filed successive libels against the cargo, setting forth the making and the principal provisions of the charter-party, and annexing a copy thereof; and further alleging that the vessel was duly loaded by July 6, and on that day the charterers tendered to the master for signature bills of lading ordering her to the Port of Aalborg, in Denmark, as the port of discharge, "to be landed at Aalborg, or as near thereto as the vessel can safely get;" that the master refused to sign the bills of lading, for the reason that Aalborg was not a safe port, and it was impossible for a vessel to enter it with cargo, or to land her cargo at the port or at any anchorage or landing place near it, so [476] as always to lay and discharge afloat; and that he expressed to the charterers his willingness to perform the charter, and requested them to name a safe port, but they refused.

Each of those libels claimed demurrage according to the charter, amounting in all to $2,070.20; the fourth libel claimed also $400 for the expenses of taking out most of the cargo; and each libel contained a prayer for general relief.

The charterers filed answers, admitting the making of the charter-party and the refusal of the master to sign bills of lading; alleging that the Port of Aalborg is a safe port, well known to commerce, especially in the petroleum trade, and one to which vessels of deeper draught than The Gazelle are habitually dispatched under charter-parties of like terms with that in controversy; and further alleging that, by the established and uniform usage and custom of trade between Baltimore and other Atlantic ports of the United States, and ports of Norway and Denmark, the Port of Aalborg is recognized as being, and understood to be, a safe, direct port of Denmark, within the terms and provisions of such a charter-party; denying that there is no safe place or anchorage outside that port where the vessel could always lay afloat and discharge her cargo, or that there had been any detention of the vessel by their default; and alleging that the entire delay and the damages, if any, resulting therefrom, were due solely to the default of the master.

On August 20 the charterers filed a cross libel against the vessel, alleging the same matters as in their answers to the other libels, and claiming $8,000 damages for breach of the charter-party, and general relief. The master filed an answer to the cross libel, presenting the same issues as the other libels and answers.

The district court sustained the libels of the master, and dismissed that of the charterers, and entered decrees accordingly. 11 Fed Rep. 429. The charterers appealed to the circuit court, which consolidated the cases, and made the following findings of fact:

"On June 16, 1881, the barque, Gazelle, a sailing vessel of 571 tons burden, then in the Port of Baltimore, Maryland, was char- [477] tered by Herman Brun, her master, to Meissner, Ackermann & Company, of New York, for a voyage, as stated in the charter-party, 'to a safe, direct, Norwegian or Danish port, as ordered on signing bills of lading, or as near thereunto as she can safely get and always lay and discharge afloat.' Exhibit accompanying the libel is the said charter. Cargo of 3,131 barrels of refined petroleum was put on board by charterers at Baltimore, and on July 6, 1881, the charterers tendered the master bills of lading ordering the vessel to the Port of Aalborg, on the eastern coast of Denmark.

"The master refused to sign the bills of lading, on the ground, as stated by him to the charterers, that Aalborg was not a safe port for a vessel of the tonnage of The Gazelle, and that no vessel of such tonnage could enter the port, even in ballast, and that there was no anchorage near the port where he could with safety lay and discharge. The charterers refused to order the vessel to any other port. Conversations and correspondence took place between the master and charterers and their agents. In all these the master insisted that he could take the cargo to the Port of Aarhus, which he said was the only safe Danish port for a vessel of such tonnage as The Gazelle, but he could not discharge at Aalborg or convey the cargo there. The charterers, on the contrary, insisted that he could and was bound to

discharge at Aalborg. During this discussion between the parties, and on one day, the master said he would sign bills containing the words 'as near thereunto as the vessel can safely get and always lay and discharge afloat,' but on the same day, upon the charterers' assenting to this, he refused, saying, in effect, that as he knew the fact to be that there was no place near Aalborg where he could safely lay and discharge; and as he knew beforehand that he would have to go to the nearest safe port, he would not sign any bills of lading which might in any way commit him to anything else. The charterers all this time insisted that he should discharge at Aalborg, and did not agree to any receding from this in assenting to add the above words on the bills of lading, but still insisted on their right to have the vessel discharged at Aalborg. Nothing was done in
178] consequence of this proposition of the master, or of his subsequent refusal as aforesaid, which in fact altered the position of the parties in any way.

"The tonnage of The Gazelle was 571 tons, and she drew, when loaded, sixteen feet three inches, and in ballast, twelve feet. The Port of Aalborg is in Denmark, on the south bank of the Limfiord, about seventeen miles from its mouth at the Cattegat Sea. At the mouth there is a bar about 2,000 feet wide, on which there is ordinarily ten feet of water, and never more than eleven feet. Off the mouth of the Limfiord there is no sheltered bay, nor any indentation of the coast, but the coast runs in a straight north and south line. It was not possible for The Gazelle to pass the bar, either in ballast or with cargo; and the only place of anchorage for a vessel which cannot cross the bar is in the Cattegat Sea off the mouth of the Limfiord; and the only mode of discharge at said anchorage is into small sailing coasters, which can pass the bar to the Port of Aalborg and carry the cargo. A considerable commerce has been carried on with the port from time immemorial by vessels of very small draught, able to cross the bar when loaded.

"Some steamers of larger draught have in late years traded regularly with the port from England. These have lighters expressly made for their purpose, which they take in tow going out, receiving from them part of their cargo when over the bar, and in returning discharge into them sufficiently to lighten to ten feet, and then tow the lighters in with them.

"Thirty-one cargoes of petroleum and grain have been exported to Aalborg from the United States since 1876; none before that time. Many of these were in vessels of such size as to be able to cross the bar after lightening a reasonable amount. Of these thirty-one vessels, two or three in all, of large size, have discharged their whole cargo outside.

"There existed at the time of the making of the charter a general custom in the Atlantic ports of the United States, with reference to charters similarly worded, that a ship may be ordered to any safe port within the range, where commerce is carried on, whether she can get into it or not, provided there is an anchorage near the port, customarily used in connection
479] with it, and where it is reasonably safe for the ship to lay and discharge.

"The Port of Aalborg and the Limfiord inside the bar are safe for vessels that can get into them and lay afloat. The water inside the bar in the Limfiord is deep, except at or near the Town of Aalborg; but the said anchorage outside the bar in the Cattegat is not a reasonably safe anchorage nor a place where it is reasonably safe for a ship to lay and discharge.

"The amount of freight under the charter for the cargo loaded was $3,285.60. The master incurred expense of $507.08 in removing and storing the petroleum cargo after the refusal of the charterers to order the vessel to any other port than Aalborg, and $17.50 for wharfage and $16 for necessary towing.

"The time required to perform such a voyage as that stated in the charter would have been about the same time as elapsed before the vessel procured another charter, which other charter was procured as soon as could have been done, and on September 2, 1881, the vessel was ready to load under the recharter; and the expenses of the vessel in port were not less than on the voyage."

The circuit court stated, as conclusions of law, that the master was entitled to recover, for breach of the charter-party, damages in the sum of $3,826.13, with interest from September 2, 1881, and that the libel of the charterers should be dismissed, and that they should pay the costs in both courts, and entered a final decree accordingly, from which the charterers appealed to this court.

Messrs. **S. T. Wallis** and **Henry C. Kennard,** for appellants:

The circuit court must find upon all material issues presented by the pleadings.

The Annie Lindsley, 104 U. S. 188 (26:718); *Clark* v. *Fredericks*, 105 U. S. 5 (26:938); *The Adriatic*, 107 U. S. 512 (27:497); *The S. C. Tryon*, 105 U. S. 270 (26:1026); *Prentice* v. *Zane*, 49 U. S. 8 How. 484 (12:1160); *Patterson* v. *U. S.* 15 U. S. 2 Wheat. 221 (4:224).

The legal conclusion arrived at by the circuit judge is not justified by his findings of fact.

Sun Mut. Ins. Co. v. *Ocean Ins. Co.* 107 U. S. 502 (27:343); *The Alhambra*, L. R. 6 P. Div. 68; *Dahl* v. *Nelson*, L. R. 6 App. Cas. 38, 43, 47, 51; *Capper* v. *Wallace*, L. R. 5 Q. B. Div. 163; *Nielsen* v. *Wait*, L. R. 14 Q. B. Div. 516; *Carsanego* v. *Wheeler*, 16 Fed. Rep. 248.

Charter-parties are entitled to liberal construction.

Raymond v. *Tyson*, 58 U. S. 17 How. 53, 59, 60 (15:47-49).

The ship owner who is prevented from performing a voyage by the wrongful act of the charterer is, *prima facie*, entitled to the freight he would have earned, less what it would have cost him to earn it.

Scrutton, Charter-Parties, 256-259; *Bailey* v. *Damon*, 3 Gray, 96; 2 Sedg. Dam. 7th ed. 118, n. a.; *The Potomac*, 105 U. S. 630 (26:1194); *Wilson* v. *Hicks*, 26 L. J. Exch. 242-3.

Mr. **Archibald Sterling, Jr.,** for appellee:

The master was right, if his objection to the port named by charterers was valid, in objecting at the time he was ordered, if in fact and law it was not a safe port, within the charter.

The Maggie Moore, 8 Fed. Rep. 620; *The Gazelle*, 11 Fed. Rep. 429.

A safe port is a port into which the chartered vessel can safely enter and discharge cargo; and a vessel so chartered is not bound to go to a port which she cannot enter and discharge in.

The Gazelle, and *The Maggie Moore*, *supra*; *Capper* v. *Wallace*, L. R. 5 Q. B. Div. 166; *The Alhambra*, L. R. 5 P. Div. 256; *S. C.* on appeal, L. R. 6 P. Div. 68; *Hillstrom* v. *Gibson*, 8 Sess. Cas. 3d series, 463; *Nelson* v. *Dahl*, L. R. 12 Ch. Div. 568; *Ogden* v. *Graham*, 1 Brown & L. Adm. 773; 31 L. J. Q. B. 26; *Geipel* v. *Smith*, L. R. 7 Q. B. 404; *Schilizzi* v. *Derry*, 4 El. & Bl. 873; *Bastifell* v. *Lloyd*, 1 Hurl. & C. 388.

The custom as found is illegal and in destruction of the contract.

The Alhambra. L. R. 6 P. Div. 68.

[484] *Mr. Justice* **Gray** delivered the opinion of the court:

The jurisdiction and authority of this court, in passing upon this appeal, are defined by the Act of February 16, 1875, c. 77, § 1, by which the circuit court, in deciding admiralty causes on the instance side, is required to state its findings of fact and its conclusions of law separately; and a review of its decrees by this court is "limited to a determination of the questions of law arising upon the record, and to such rulings of the circuit court, excepted to at the time, as may be presented by a bill of exceptions prepared as in actions at law." 18 Stat. at L. 315. The limit thus prescribed has been steadfastly upheld by this court against repeated attempts to escape from it. *The Abbotsford*, 98 U. S. 440 [25: 168]; *The Benefactor*, 102 U. S. 214 [26: 157]; *The Annie Lindsley*, 104 U. S. 185 [26: 716]; *The Francis Wright*, 105 U. S. 381 [26: 1100]; *Sun Ins. Co.* v. *Ocean Ins. Co.* 107 U. S. 485 [27: 337]. *The Adriatic*, 107 U. S. 512 [27: 497]; *The Connemara*, 108 U. S. 352 [27: 751]; *Merchants' Ins. Co.* v. *Allen*, 121 U. S. 67 [30: 858].

[485] The record in this case consists of the pleadings, the findings of fact, the conclusions of law and the final decree.

By the express terms of the charter-party, the charterers were bound to order the vessel "to a safe, direct, Norwegian or Danish port, or as near thereunto as she can safely get and always lay and discharge afloat." The clear meaning of this is that she must be ordered to a port which she can safely enter with her cargo, or which, at least, has a safe anchorage outside where she can lie and discharge afloat. *Dahl* v. *Nelson*, L. R. 6 App. Cas. 38; *The Alhambra*, L. R. 6 P. Div. 68. The charterers insisted upon ordering her to the Port of Aalborg. The circuit court has found that Aalborg is in a *fiord* or inlet having a bar across its mouth, which it was impossible for The Gazelle to pass, either in ballast or with cargo; and that the only anchorage outside the bar is not a reasonably safe anchorage, nor a place where it is reasonably safe for a vessel to lie and discharge.

These positive findings of essential facts are in no way controlled or overcome by the other statements (rather recitals of portions of the evidence than findings of fact) that large English steamers habitually, and thirty-one American vessels in the course of several years had, in fact, dircharged the whole or part of their cargoes at that anchorage, without accident or disaster. A dangerous place may often be stopped at or passed over in safety. The evidence on the other side is not stated in the findings; and if it were, this court, in an admiralty appeal, has no authority to pass upon the comparative weight of conflicting evidence.

The circuit court has found that "there existed, at the time of the making of the charter, a general custom in the Atlantic ports of the United States, with reference to charters similarly worded, that a ship may be ordered to any safe port within the range where commerce is carried on, whether she can get into it or not, provided there is an anchorage near the port, customarily used in connection with it, and where it is reasonably safe for the ship to lay and discharge." But the only anchorage near the Port of Aalborg not being a reasonably safe place to lie and discharge at, that custom has no bearing on this case.

It has been strenuously maintained in behalf [486] of the appellants that the circuit court erred in not making any finding upon the distinct issue, presented by the pleadings, whether by the uniform and established custom of trade between Baltimore and other Atlantic ports, and the ports of Norway and Denmark, Aalborg was recognized as being, and understood to be, a safe, direct port of Denmark, within the meaning of such a charter-party.

The answer to this position is twofold: 1. It does not appear on this record that there was any proof of such a custom. If the appellants did offer such proof, and it was rejected or disregarded by the court, their remedy was by tendering a bill of exceptions, and thus making their offer, and the action of the court thereon, part of the record, which has not been done. *The Francis Wright*, 105 U. S. 381, 387 [26: 1100, 1101]. 2. Evidence of a custom to consider as safe a particular port, which in fact is not reasonably safe, would directly contradict the charter-party, and would therefore be incompetent as matter of law. *Barnard* v. *Kellogg*, 77 U. S. 10 Wall. 383 [19: 987]; *The Alhambra*, L. R. 6 P. Div. 68; *Hayton* v. *Irwin*, L. R. 5 C. P. Div. 130.

The charterers, having refused to order the vessel to such a port as the charter-party called for, and having insisted on ordering her to a different one, were rightly held to be in default and answerable in damages; and the subject remaining to be considered is the amount of damages awarded against them, consisting of the whole amount of freight, and of the expense of taking out the cargo, and of wharfage and towing.

The material facts appearing upon the record, bearing upon this subject, are as follows:

The charterers, having detained the vessel by their persistent refusal to order her to such a port as was described in the charter-party, the master, as he had a right to do, treating the charter-party as still existing, filed successive libels, claiming demurrage accruing under it, until the charterers filed a cross libel, contending that the master (who had only maintained the just rights of the owners) had committed a breach of the charter-party. It being then hopeless that the charterers would perform the [487] charter-party on their part, the master proceeded to take out the cargo, and the owners

were entitled to freight. The circuit court has found simply that the time required to perform such a voyage as that stated in the charter would have been about the same time as elapsed before the vessel procured another charter; that another charter was procured as soon as could have been done; and that the expenses of the vessel in port were not less than on the voyage.

Nothing, therefore, is shown to take the case out of the general rule that a ship owner, who is prevented from performing the voyage by a wrongful act of the charterer, is *prima facie* entitled to the freight that he would have earned, less what it would have cost him to earn it. *Kleine* v. *Catara*, 2 Gall. 61; *Ashburner* v. *Balchen*, 7 N. Y. 262; *Smith* v. *McGuire*, 3 Hurl. & N. 554; *S. C.* 27 L. J. N. S. Exch. 465.

It is further contended that the court erred in awarding as damages the whole freight, amounting to $3,285.60, under libels claiming only demurrage and expenses to the amount of $2,470.20. But those libels set forth all the material facts ultimately found by the court, and each libel contained a prayer for general relief.

In the Courts of Admiralty of the United States, although the proofs of each party must substantially correspond to his allegations, so far as to prevent surprise, yet there are no technical rules of variance, or of departure in pleading, as at common law; and if a libelant propounds with distinctness the substantive facts upon which he relies, and prays, either specially or generally, for appropriate relief (even if there is some inaccuracy in his statement of subordinate facts, or of the legal effect of the facts propounded), the court may award any relief which the law applicable to the case warrants. *Dupont* v. *Vance*, 60 U. S. 19 How. 162 [15: 584]; *The Syracuse*, 79 U. S. 12 Wall. 167 [20: 382]; *Dexter* v. *Munroe*, 2 Sprague, 39; *The Cambridge*, 2 Lowell, 21.

Decree affirmed.

---

[438] DAVID J. HENNESSEY, *Appt.*,
v.
CLARA WOOLWORTH ET AL.

(See S. C. Reporter's ed. 438-443.)

Specific performance—when denied—Minnesota law.

1. Specific performance is not an absolute right. It rests in judicial discretion, exercised according to the principles of equity, and with reference to the facts of the case.
2. It should never be granted unless the terms of the agreement sought to be enforced are clearly proved, or where it is left in doubt whether the party against whom the relief is asked in fact made such an agreement.
3. Under the laws of Minnesota the assent of the husband, who does not own the property, is insufficient to pass the title of the wife.

[No. 74.]

Argued Nov. 13, 14, 1888. Decided Nov. 26, 1888.

APPEAL from a decree of the Circuit Court of the United States for the District of Minnesota, dismissing a cross bill and decreeing that defendant had no interest or title in the land, and enjoining him from asserting any against the plaintiffs. *Affirmed.*

Statement by *Mr. Justice* **Harlan**:

The appellees, S. B. Woolworth and Clara Woolworth, his wife, the plaintiffs below, claiming to have been for more than ten years prior to the 13th of June, 1883, in the constant, actual and lawful possession of lots 4 and 9, block 20, Robert and Randall's addition to St. Paul, Minnesota, and averring that the appellant, the defendant below, wrongfully asserted an interest therein adverse to them, brought this suit in one of the courts of the State, for the purpose of obtaining a decree adjudging that the defendant has no right, title, estate, lien or interest in those lots, and for such other relief as was proper. The suit was based upon a statute of Minnesota providing that "An action may be brought by any person in possession, by himself or his tenant, of real property, against any person who claims an estate or interest therein, or lien upon the same, adverse to him, for the purpose of determining such adverse claim, estate, lien, or interest; and any person having or claiming title to vacant or unoccupied real estate may bring an action against [439] any person claiming an estate or interest therein adverse to him, for the purpose of determining such adverse claim, and the rights of the parties respectively." Laws, Minn. 1878, p. 814, c. 75, § 2. The suit was subsequently removed into the Circuit Court of the United States.

The original complaint having been ordered to stand as a complaint in equity in the circuit court, the defendant filed an answer controverting all of its material allegations, and, also, by leave filed a cross bill, seeking a decree for the specific execution of a written agreement, which was put upon record, and is alleged to have been made between him and the plaintiffs on the 23d of December, 1881, for the sale and conveyance by them to him of the lots in question. That agreement is as follows:

"Received at St. Paul, Minn., this 23d day of December, 1881, of David J. Hennessey, of Dubuque, Iowa, the sum of fifty dollars as earnest and in part payment of the price of lots four (4) and nine (9), in block twenty (20), of Robert and Randall's addition to St. Paul, Minn., which, as the authorized agent of Clara Woolworth and S. B. Woolworth, her husband, of the last named city and State, I have bargained and sold to the said Hennessey for ten thousand dollars to be paid, and which the said Hennessey stipulates to pay, as follows, to wit: twenty-five hundred dollars, less aforesaid earnest money, on delivery to the said Hennessey of good warranty deed with full covenants, which shall convey to the said Hennessey from the said Woolworths good, clear, and perfect title, except as to the notes and mortgages hereinafter mentioned, to said property and to all improvements and appurtenances thereunto belonging; and after the said Hennessey shall have been furnished by the said Woolworths with a complete, official, and certified abstract of title to the said property, which shall show title in them thereto as aforesaid, and nineteen hundred dollars on or before one year, and nineteen hundred dollars on or before two years, and nineteen hundred dollars on or before three years from the delivery as aforesaid and the giving to said Hennessey of possession of said [440] premises and the emoluments, with interest at

the rate of seven per centum per annum, payable annually, except in case of a note taken up before due, and the three last mentioned sums are to be secured by mortgage back on the said premises, and the said Hennessey is to assume, from and after the last mentioned date, and from and after that date only, a certain note and mortgage for eighteen hundred dollars, which plaintiffs made August 10, 1880, and running from Seth B. Woolworth and Clara Woolworth to Edwin W. Rice, which said mortgage is recorded in the office of the register of deeds of said Ramsay County, in Book 59 of mortgages, on p. 218, and which the said Hennessey agrees, under and in accordance with the said stipulations herein contained, and each of them, to pay when due.

"It is, moreover, agreed that if there are any clouds or defects in the title to the said property they and each of them shall be removed and cured with becoming diligence by the said Woolworths; and if not removable or curable the aforesaid fifty dollars is to be refunded and this contract to be null and void, at the option of the said Hennessey, and to be void, also, at the option of the said Hennessey, in the event of the neglect or failure on the part of said Woolworths to remove or cure the clouds or defects which may be on said title.

"P. T. KAVANAUGH,
"*Agent of Clara Woolworth and S. B. Woolworth.*
"DAVID J. HENNESSEY.

"Witnesses:
"H. A. Estes.
"H. M'Carthy."

Replications to the answer and cross bill were filed by the plaintiffs, and a decree rendered dismissing the cross bill and giving them the relief asked by the original bill or complaint. By that decree it was, among other things, adjudged that the instrument of December 23, 1881, was not authorized by the plaintiffs, or either of them, and was void; that the defendant had no right or interest in said [441] lots in virtue of that writing. The defendant and all persons claiming under him were enjoined from asserting any interest in the lots as against the title or possession of the plaintiffs or either of them.

It was in proof that the plaintiffs, under date of December 8, 1881, executed and delivered to Kananaugh a writing as follows:

"ST. PAUL, Dec. 8, 1881.

"P. T. Kavanaugh: We hereby authorize you to sell for us lots 4 and 9, block 20, Robert & Randall's addition to St. Paul, for ten thousand dollars net to us.

"CLARA WOOLWORTH.
"S. B. WOOLWORTH."

There was some evidence tending to show that when Hennessey purchased there was exhibited to him a writing purporting to be signed by the plaintiffs, and which authorized Kavanaugh to make sale of these lots upon substantially the terms embodied in the written agreement of December 23, 1881.

The lots, it should be stated, were the property of Mrs. Woolworth, having been purchased with her means.

Mr. **M. F. Morris,** for appellant.

Mr. **I. V. D. Heard,** for respondents:

The finding of the court below on a controverted question of fact settled the controversy and this court will not review the finding but affirm the decree of the circuit.

Wiscart v. *Dauchy*, 3 U. S. 3 Dall. 321 (1:619); *Parker* v. *Phetteplace*, 68 U. S. 1 Wall. 684 (17: 675); *Lytle* v. *Ark.* 63 U. S. 22 How. 193 (16: 306); *Alviso* v. *U. S.* 75 U. S. 8 Wall. 337 (19: 305); *Harrell* v. *Beall*, 84 U. S. 17 Wall. 590 (21: 692).

The option clause in the Kavanaugh contract rendered the whole contract void, as it was a material variation from the Pioneer Press draft.

Mackey v. *Ames*, 31 Minn. 103.

Even if the Kavanaugh contract was valid, specific performance will not be granted.

Weatherford v. *James*, 2 Ala. 170; *Drake* v. *Barton*, 18 Minn. 462; *Barton* v. *Drake*, 21 Minn. 299; Waterman, Spec. Perf. §§ 125, 395.

The relief asked is for the sound discretion of the court and not a matter of course; and the court will hear oral testimony to show that a written agreement is unfair and does not express the real intent of the parties.

1 Story, Eq. Jur. § 770; Waterman, Spec. Perf. §§ 152, 158, 159, 162, 169, 176, 239; *Hepburn* v. *Dunlop* (note D), 1 Wheat. 179 (4: 65); *Williams* v. *Williams*, 50 Wis. 316; *Bowman* v. *Irons*, 2 Bibb, 78; *Maynard* v. *Brown*, 41 Mich. 298, 2 N. W. Rep. 30; *McMurtrie* v. *Bennette*, Harr. Ch. (Mich.) 124; *Chambers* v. *Livermore*, 15 Mich. 381 and note 1; *Clitherall* v. *Ogilvie*, 1 Desauss. Eq. 250 and note; *Seymour* v. *Delancy*, 3 Cow. 445; *Brashier* v. *Gratz*, 19 U. S. 6 Wheat. 528 (5: 322); *Pratt* v. *Carroll*, 12 U. S. 8 Cranch, 471 (3: 627); *Edwards* v. *Atkinson*, 14 Tex. 373; *Merritt* v. *Brown*, 19 N. J. Eq. 286.

The defendant must seek his remedy in an action at law in damages.

McClane v. *White*, 5 Minn. 178.

Specific performance will not be decreed unless the party seeking relief has in good faith complied with the terms.

Breckenridge v. *Clinkinbeard*, 2 Litt. (Ky.) 127.

Nor where the party seeking relief is in fault.

Taylor v. *Longworth*, 39 U. S. 14 Pet. 172 (10: 405); *Holgate* v. *Eaton*, 116 U. S. 33 (29: 538).

Mr. Justice **Harlan** delivered the opinion of the court:

It is not claimed, as it could not well be, that the writing executed by plaintiffs on December 8, 1881, invested Kavanaugh with authority to assent, on behalf of the appellees, to the terms contained in the agreement of December 23, 1881. Authority to sell the lots for "$10,000 net" to the plaintiffs was not authority to impose upon them the burdensome conditions embodied in the last writing. Besides, it is clear from the evidence that Hennessey declined to enter upon negotiations for the lots unless Kavanaugh obtained from the appellees some writing conferring upon him, as their [442] agent, larger powers than were given by the writing of December 8, 1881. The controlling question, therefore, as the court below properly said, was whether the appellees invested Kavanaugh with authority to make sale of the property upon the terms set forth in the writing of December 23, 1881.

It may be conceded, for the purposes of the present case, that in executing that writing

Kavanaugh did not exceed the authority given him by Woolworth, and that the latter gave Hennessey to understand that he assented to a sale on the terms contained in it. But the husband did not own the property, and his assent alone was insufficient to pass the title of the wife. Laws Minn., p. 769, c. 69, §§ 2 and 4. Under any, even the most liberal, interpretation of the local statutes relating to the contracts of married women for the sale of their real property, the appellant could not have a specific performance of the agreement of December 23, 1881, unless it was satisfactorily shown that Mrs. Woolworth, in some legal form, authorized its execution by Kavanaugh on her behalf. We are of opinion that a case is not made which would justify a decree in plaintiff's favor on the cross bill. Specific performance is not of absolute right. It rests entirely in judicial discretion, exercised, it is true, according to the settled principles of equity, and not arbitrarily or capriciously, yet always with reference to the facts of the particular case. *Willard* v. *Tayloe*, 75 U. S. 8 Wall. 557, 567 [19:501, 504]; *Rutland Marble Co.* v. *Ripley*, 77 U. S. 10 Wall. 339, 357 [19:955, 961]; 1 Story, Eq. § 742; *Seymour* v. *Delancey*, 6 Johns. Ch. 222, 224.* The question in cases of specific performance, *Lord* Eldon said, is not what the court must do, but what, under the circumstances, it may do, in the exercise of its discretion to grant or withhold relief of that character. *White* v. *Damon*, 7 Ves. 30, 35; *Radcliffe* v. *Warrington*, 12 Ves. 326, 331.

It should never be granted unless the terms of the agreement sought to be enforced are clearly proved, or, where it is left in doubt whether the party against whom relief is asked in fact made such an agreement. *Colson* v. *Thompson*, 15 U. S. 2 Wheat. 336, 341 [4: 253, 255]; *Carr* v. *Duval*, 39 U. S. 14 Pet. 77, 83 [10: 361, 363]; *Huddleston* v. *Briscoe*, 11 Ves. 583, 591; *Lanz* v. *McLaughlin*, 14 Minn. 73; *Waters* v. *Howard*, 1 Md. Ch. 112, 116. That Mrs. Woolworth united with her husband in the writing of December 8, 1881, is clearly established. But that she ever signed any other writing relating to the sale of the lots in question, or authorized or directed her husband, or Kavanaugh, or anyone else, to sell the lots upon the terms embodied in the writing of December 23, or that she approved or ratified a sale to Hennessey upon such terms, is, to say the least, very doubtful under the conflicting evidence in this cause. The circuit court did not, therefore, err in refusing specific performance and dismissing the cross bill. And as the agreement of December 23, 1881, was not shown to be the contract of Mrs. Woolworth, the appellees were entitled to such a decree as was rendered on the original bill.

The decree of the Circuit Court is affirmed.

---

[488] W. M. QUIMBY ET AL., *Plffs. in Err.*,
v.
J. SCOTT BOYD, JR., ET AL.

(See S. C. Reporter's ed. 488, 489.)

State judgment—what errors reviewable.

*See editorial note, Lawyers' edition. [Ed.]

1. Where, in a writ of error to a judgment of the supreme court of a State, rendered on a verdict for the recovery of a mining claim, it does not appear that, in the state court, the fact that the claim of plaintiffs followed in its length the general course of the vein, or that the side lines were parallel with and the end lines at right angles to the vein, was drawn in question, it is too late to do so here as the basis of jurisdiction.

2. Alleged errors of the state court which involve questions either of fact or of state, and not of federal law, are not reviewable here on writ of error.

[No. 121].

Submitted Nov. 19, 1888. Decided Nov. 26, 1888.

IN ERROR to the Supreme Court of the State of Colorado, to review a judgment of that Court affirming a judgment in the State District Court for the recovery of a certain lode and mining claim.

On motion to dismiss. *Granted.*

The facts are stated in the opinion.

Mr. **George A. King**, for defendants in error, in support of the motion:

The question whether the notice of the location of the claim contained a sufficient description, by reference to natural objects and permanent and well known monuments, to identify the same presented a mere question of fact, and not one of law, and was, therefore, not reviewable.

Eilers v. *Boatman*, 111 U. S. 356 (28: 454).

That this question was not raised below, either in the trial court or the supreme court of the State, is a sufficient ground for dismissing the writ of error.

Susquehanna Boom Co. v. *West Branch Boom Co.* 110 U. S. 57 (28: 69); *Simmerman* v. *Neb.* 116 U. S. 54 (29: 535).

Where the only questions to be litigated in suits to determine the right to mining claims are as to what are the local laws, rules, regulations and customs by which the rights of the parties are governed, and whether the parties have conformed to such local laws and customs, the Courts of the United States have no jurisdiction.

Trafton v. *Nougues*, 4 Sawy. 178.

The same objection holds good to the jurisdiction of this court to re-examine questions of that character by writ of error to a state court under section 709 of the Revised Statutes.

Romie v. *Casanova*, 91 U. S. 379 (23: 374); *McStay* v. *Friedman*, 92 U. S. 723 (23: 767); *Hoadley* v. *San Francisco*, 94 U. S. 4 (24: 34).

To authorize a review by this court of the judgment of a state court on writ of error, section 709 of the Revised Statutes requires that the decision of the state court shall have been against the title, right, privilege or immunity set up under the laws of the United States.

Ryan v. *Thomas*, 71 U. S. 4 Wall. 603 (18: 460).

The reference to the tree as a proper natural object to identify the claim, coupled with the reference to the mountain peak, constitutes a clear and sufficient description under the requirements of section 2324.

Glacier Mountain Silver Mining Co. v. *Willis*, 127 U. S. 471 (*ante*, 172); *Meyers* v. *Farquharson*, 46 Cal. 190.

No question was raised in the state court but what the location of the defendants in error followed in its length the general course of the vein, and that the side lines thereof were sub-

stantially parallel with, and the end lines at right angles to, the vein.

Flagstaff Silver Mining Co. v. *Tarbet*, 98 U. S. 463 (25: 253).

(No counsel appeared in opposition.)

Mr. Chief Justice **Fuller** delivered the opinion of the court:

This is a writ of error to a judgment of the Supreme Court of Colorado, in affirmance of a judgment rendered on a verdict in favor of defendants in error in the District Court of El Paso County, in that State, against plaintiffs in error, for the recovery of a certain lode and mining claim known as the Paymaster Lode, situated in the Monarch Mining District in Chaffee County, Colorado, which defendants in error alleged had been duly located under the Mining Laws of the United States by one Shepherd, from whom they purchased, and upon which plaintiffs in error had, as they averred, unlawfully entered.

The errors assigned are that the court erred in holding the record to have sufficiently identified the mining claim of defendants in error; that the record of such claim, "three hundred feet wide by fifteen hundred feet in length, was valid without reference to the vein or its relative position to the boundaries;" that the original location in marking the boundaries of the claim might, in that mining district, "where claims were limited to one hundred and fifty feet on each side of the center of the vein, take thirty-three feet on one side and [489] make up for the deficiency by taking two hundred and sixty-seven feet on the other side;" that the annual labor performed by defendants in error on their alleged claim for the year 1880 "should not be measured by its actual value when done, but by a speculative value in advance;" that judgment should have been given for plaintiffs in error, and not for defendants in error.

We do not find that in the trial court or in the supreme court of the State the fact that the claim of plaintiffs below followed in its length the general course of the vein, or that the side lines were substantially parallel with, and the end lines at right angles to, the vein, was drawn in question; and it is therefore too late to do so here as the basis of jurisdiction; and in our view the other alleged errors involved questions either of fact or of state and not of federal law.

The motion to dismiss the writ of error is therefore sustained.

Writ of error dismissed.

---

[426] THE FIRE INSURANCE ASSOCIATION (Limited), *Plff. in Err.*,

v.

JOHN W. WICKHAM, JR., ET AL.

(See S. C. Reporter's ed. 426-435.)

Question certified—one of law only—not embrace whole case—questions as to evidence.

1. The question certified to this court upon a difference of opinion between the judges of the circuit court must be a distinct point or proposition of law, clearly stated, so that it can be definitely answered, without regard to the other issues of law or fact in the case.

2. It must be a question of law only, and not a question of fact or of mixed law and fact; it must not involve or imply a conclusion or judgment upon the weight or effect of testimony or facts adduced in the cause, as, for example, a question of fraud.

3. It must not embrace the whole case, even when its decision turns upon matters of law only; and even though it be split up into the form of questions.

4. A question, which asks this court to decide whether upon all the evidence in the case the defendant was entitled to a verdict, cannot be properly certified to this court.

5. The question whether parol evidence may or may not be introduced to explain such documents as those which were given in evidence by the defendant presents a single point of law, the documents being of the same general character and offered to prove the same fact.

[No. 1082.]

Submitted Nov. 12, 1888. Decided Nov. 26, 1888.

IN ERROR to the Circuit Court of the United States for the Eastern District of Michigan, to review a judgment upon a policy of insurance.

On motion to dismiss. *Denied.*

The facts are stated in the opinion.

Messrs. **F. H. Canfield** and *H. H. Swan*, for defendants in error, in support of motion:

This court cannot determine whether the defendant was entitled to a verdict under the facts set forth, or whether the parol evidence was admissible on the facts stated in the record, when the record contains no finding of facts, but only a statement of the evidence offered by each party.

Jewell v. *Knight*, 123 U. S. 426 (31: 190).

As the case was tried by a jury, the jury alone could make a valid finding of facts for any purpose.

Daniels v. *Chicago & R. I. R. Co.* 70 U. S. 3 Wall. 257 (18: 226).

The case is not such a one as this court can consider upon a certificate of division of opinion.

State Bank v. *St. Louis Rail Fastening Co.* 122 U. S. 21 (30: 1121); *Harris* v. *Elliott*, 35 U. S. 10 Pet. 25 (9: 333); *U. S.* v. *Briggs*, 46 U. S. 5 How. 208 (12: 119); *Nesmith* v. *Sheldon*, 47 U. S. 6 How. 41 (12: 335); *Waterville* v. *Van Slyke*, 116 U. S. 699 (29: 772); *Williamsport Bank* v. *Knapp*, 119 U. S. 357 (30: 446); *Baylis* v. *Travelers Ins. Co.* 113 U. S. 316 (28: 989).

The legal effect to be given the receipts, and to Exhibit Q Q, whether they were intended as a compromise of the claim for saving the vessel, and whether there was any consideration, was a mixed question of law and fact for the court and jury, to be determined from all the facts and circumstances; and the admissibility of the testimony referred to in the first question certified necessarily embraces the whole case, and is not a pure question of law.

West v. *Smith*, 101 U. S. 263, 270 (25: 809, 812); *Barreda* v. *Silsbee*, 62 U. S. 21 How. 168 (16: 93); *U. S.* v. *City Bank*, 60 U. S. 19 How. 385 (15: 662); *Mobile & M. R. Co.* v. *Jurey*, 111 U. S. 584 (28: 527).

The question certified embraces the entire case.

Waterville v. *Van Slyke*, 116 U. S. 699 (29: 772); *Cal. A. S. Paving Co.* v. *Molitor*, 113 U. S. 609 (28: 1106); *Weeth* v. *N. E. Mortg. Co.* 106

U. S. 605 (27: 99); *Enfield* v. *Jordan*, 119 U. S. 680 (30: 523); *Wilson* v. *Barnum*, 49 U. S. 8 How. 258 (12: 1070); *Webster* v. *Cooper*, 51 U. S. 10 How. 54 (13: 325); *Dennistoun* v. *Stewart*, 59 U. S. 18 How. 565 (15: 489).

The record does not show that a disagreement of opinion actually existed between the judges.

Colorado Cent. R. Co. v. *White*, 101 U. S. 98 (25: 860): *Webster* v. *Cooper*, 51 U. S. 10 How. 54 (13: 325).

The mere fact of payment of the fire loss before due is no consideration for the discharge of the salvage claims.

Philpot v. *Gruninger*, 81 U. S. 14 Wall. 577 (20: 744); *Ellis* v. *Clark*, 110 Mass. 389, 392.

The rule which excludes parol testimony to contradict or vary a written instrument does not forbid an inquiry into the object of the parties in executing and receiving the instrument.

Brick v. *Brick*, 98 U. S. 516 (25: 256); *Harris* v. *Rickett*, 4 Hurl. & N. 1; *Mobile & M. R. Co.* v. *Jurey*, 111 U. S. 591 (28: 530).

Before this rule can be applied the contract in writing must be shown to be the contract of the parties.

Whart. Ev. § 927; *Wake* v. *Harrop*, 6 Hurl. & N. 775; *Pym* v. *Campbell*, 6 El. & Bl. 370; *Davis* v. *Jones*, 17 C. B. 625; Pollock, Cont. 440; *Guardhouse* v. *Blackburn*, L. R. 1 P. & D. 115.

If there is doubt as to interpretation of the phrase *loss and damage by fire*, the oral testimony was competent to apply the writing to their subject matter.

Bradley v. *Washington, A. & G. S. Packet Co.* 38 U. S. 13 Pet. 89 (10: 72); *U. S.* v. *Peck*, 102 U. S. 64 (26: 46); *Barreda* v. *Silsbee*, 62 U. S. 21 How. 146 (16: 86); *U. S.* v. *City Bank*, 60 U. S. 19 How. 385 (15: 662).

Messrs. **C. I. Walker** and **F. A. Baker**, for plaintiff in error, in opposition:

A written contract cannot be varied by parol testimony.

1 Greenl. Ev. §§ 275, 281; 2 Whart. Ev. § 920; 2 Pars. Cont. 585; *Corse* v. *Peck*, 3 Cent. Rep. 671, 102 N. Y. 515; *Brick* v. *Brick*, 98 U. S. 514 (25: 256); *Boffinger* v. *Tuyes*, 120 U. S. 205 (30: 651); *Soper* v. *Atlantic Mut. F. & M. Ins. Co.* 120 Mass. 267; *Carr* v. *Hays*, 9 West. Rep. 183, 110 Ind. 414; *Carpenter* v. *Jamison*, 6 Mo. App. 216; *Kansas City & O. R. Co.* v. *Hicks*, 30 Kans. 288.

Simple receipts for money may be contradicted by parol.

2 Pars. Cont. 555; 1 Greenl. Ev. § 305; *Coon* v. *Knap*, 8 N. Y. 402; *Egleston* v. *Knickerbacker*, 6 Barb. 466.

The amount having been paid fifty-five days in advance of its being due is a good consideration for the agreement.

2 Pars. Cont. 618, 619; *Smith* v. *Brown*, 8 Hawks, 580; *Brooks* v. *White*, 2 Met. 283; 2 Greenl. Ev. 28.

Mr. Justice **Bradley** delivered the opinion of the court:

This case comes here by writ of error and a certificate of division of opinion of the Judges of the Circuit Court. The action was brought upon a policy of insurance against fire to recover damages occasioned by the burning of the propeller St. Paul, of which the plaintiffs below, the defendants in error, were the owners. [427] The vessel was insured against fire in ten companies, including the plaintiff in error, which issued two policies amounting together to $5,000. The St. Paul first took fire at Detour, where the River St. Mary enters Lake Huron, and had to be scuttled and sunk. She was then raised, and taken to Detroit for repairs. There she took fire a second time, and had to be again sunk. The mere injury to the vessel was settled and paid for by the insurers before it was due by the terms of the policies. The plaintiffs contend that the expense of raising and saving the vessel was not included in this settlement, but was left for future adjustment, and this suit was brought to recover that part of the loss. Similar suits were brought against the other companies, all of which were, by agreement, to abide the event of this. The defendants in error had a verdict and recovered judgment for $2,297.65, which would not have been sufficient to give this court jurisdiction but for the difference of opinion between the judges. That difference arose on the trial as will appear by the following statement of the case:

It appeared in evidence that the first fire, at Detour, occurred on the 10th of November, 1883, and the second, at Detroit, on the 24th of the same month whilst the cargo was being unladen in order to make the necessary repairs. In both cases the vessel was sunk for the purpose of saving her and her cargo, and raised again at considerable expense. On the 15th of December, 1883, a written agreement was entered into between the plaintiffs and the adjusting agents of the several insurance companies, for the purpose of adjusting the amount of loss caused by the fires to the hull, tackle, awnings, apparel, furniture, engine and boiler connections and appurtenances thereto belonging; by which agreement certain arbitrators were appointed to make such adjustment without reference to any other question or matter of difference within the terms and condition of the insurance, and of binding effect only as far as regards the actual cash value of, or damage to, such property covered by the policies. The adjustment under this agreement was completed December 26, 1883, showing a loss of $15,364.78, the proportion due by the plaintiffs in error being $1,920.60. The adjusting agent [428] sent proofs of the loss to the companies with the following letter to each, viz.:

"BUFFALO, *January 12th, 1884.*

"GENTLEMEN: I enclose herewith proofs, Jno. W. Wickham, Jr., managing owner, for loss and damage prop. St. Paul, which I trust will be found satisfactory:

The claim as made covers only the loss and damage by fire and water, as per agreement, on the tackle, awnings, apparel, furniture, etc., of	$1,735.08
And the appraisers' award on hull, engines, mach'y, etc., of	13,629.70
"Aggregating in all	$15,364.78

"The assured will make further claims for expenses of raising the propeller, and is now preparing the statement of such expenses to submit with his subsequent claim.

"Yours Truly, W. D. ALLEN, *Adjuster.*"

At the trial it was admitted that the cost of raising and saving the vessel was upwards of $15,000. The plaintiffs admitted that they had been paid the cost of repairing the vessel as set forth in the proofs of loss prepared and forwarded to the companies as aforesaid, but claimed that they had not been paid any part of the costs of raising and saving the vessel; that before the commencement of this suit they demanded payment thereof, which was refused, the insurers denying liability therefor, and the same remains unpaid.

The defendants claimed that the payment of the costs of said repairs was made by way of accord and satisfaction of the plaintiffs' entire claim, and offered in evidence the following receipts:

"$1,344.42 JANUARY 19, 1884.

"Received from the Fire Insurance Association of London, England, thirteen hundred and forty-four $\frac{42}{100}$ dollars, it being in full of all claims and demands for loss or damage by fire which occurred on the 10th and 24th days of [429] November, 1883, to property insured by policy No. 108,617, Buffalo, New York, agency, and in consideration of said payments said policy is hereby canceled and surrendered to said company, and all further claims by virtue of said policy forever waived.

"(Signed) JOHN W. WICKHAM, JR.,
Managing Owner.
W. B. COMSTOCK
Per WICKHAM."

There was also a receipt indorsed upon the policy No. 180,617, as follows:

"JANUARY 19TH, 1884.

"In consideration of four $\frac{47}{100}$ dollars, return premium, the receipt of which is hereby acknowledged, this policy is canceled and surrendered to the Fire Insurance Association (Limited) of England.

"(Signed) JOHN W. WICKHAM, JR.,
Managing Owner.
W. B. COMSTOCK,
Per WICKHAM, JR."

A similar receipt for $576.18 was given by the plaintiffs to the defendant for the amount due on the other policy issued by the latter. And like receipts, all of the same date except two, which were a few days later, were given to the other companies concerned, all of which were given in evidence by the defendants.

The defendant also gave in evidence the following paper signed by the plaintiffs, marked Exhibit QQ, viz.:

NEW YORK, *January 19th*, 1884.

"This is to certify that the loss and damage by fire which occurred on the 23d day of November, 1883, to the steamer St. Paul, is this day adjusted for the sum of fifteen thousand three hundred and sixty-four and $\frac{78}{100}$ dollars ($15,364.78), payable without discount upon presentation of the policies to the several companies interested by the assured, and apportioned among the several companies as follows, viz.:

	Insures	Pays	
"Continental, of New York	$7,500 00	$2,880 90	[430]
London & Liverpool & Globe	6,000 00	2,304 70	—Paid.
Fire Insurance Association	3,500 00	1,344 42	—Paid.
Queen's, of England	7,000 00	2,688 84	—Paid.
Fire Ins. Ass'n, 2d Policy	1,500 00	576 18	—Paid.
Security, of New Haven	2,500 00	960 30	—Will remit
Exchange, of New York	2,500 00	960 30	—Paid 1, 19, '84
Mechanics', of New York	2,500 00	960 30	—Paid 1, 19, '84
German, of Pa.	2,500 00	960 30	—Will remit.
Prescott Insurance Co.	2,500 00	960 30	—Remitted.
Greenwich, of New York	2,000 00	768 24	—Paid 1, 19, '84
	$40,000 00	$15,364 78	

"(Signed) JOHN W. WICKHAM, JR.
Managing owner
W. B. COMSTOCK,
Per JOHN W. WICKHAM, JR.

"JOHN K. OAKLEY,
J. H. WELLMAN,
Committee."

The court held that if these documents were sufficient evidence of an intent to compromise and settle the expense of raising and saving the propeller, although the amount paid was only that of the injury to the property, yet the anticipation of such payment nearly sixty days before, according to the terms of the policies, it was due, was a sufficient consideration for such compromise.

The defendant having rested, the plaintiffs, in rebuttal, offered evidence tending to show that in January, 1884, the said Wickham went to New York; and that on the 19th of that month, the day on which the receipts given by him to the insurance companies, and the paper marked QQ were dated and signed, and before they were signed, he, the said Wickham, had an interview with Oakley and Wellman, the committee of the insurance companies who signed the last named paper, and also evidence of certain communications between said committee and Wickham in that interview, which showed, or tended to show, that the said receipts and said paper QQ were not intended to refer to or embrace the claim of the plaintiffs [431] for raising and saving said vessel, but only the claim for the damages specially included in the adjustment made by the arbitrators before mentioned.

The defendants objected to the introduction of this parol testimony, tending to contradict the receipts and drafts given in evidence and the certificate of January 19, Exhibit QQ, upon the ground that such evidence was not admissible in the absence of fraud, misrepresentation and mistake. These objections were overruled by the presiding judge, and the evidence was received and submitted to the jury. This is one of the points on which the judges differed in opinion. They state the question as follows: "On the facts stated in the foregoing record, was the parol testimony offered in evidence by the plaintiffs admissible to vary and contradict the certificate of January 19, 1884, Exhibit QQ, and the receipts and drafts hereinbefore set forth?"

The evidence offered by the plaintiffs having been given to the jury, the defendants offered evidence tending to contradict the same, and to show that the whole matter arising out of the loss was intended to be compromised and settled, by what took place between the parties on the 19th of January, 1884.

There was no evidence that said agreement of January 19, Exhibit QQ, and the several receipts and discharges executed by the plaintiffs, were obtained by any fraud or misrepresentation of the defendants or their agents.

After the evidence was closed the defendant requested the court to charge the jury that the defendant was entitled to a verdict. On this point the judges who tried the cause were also divided in opinion, the presiding judge being of opinion that the request should not be granted; and this is the second question certified to this court for its decision.

The defendant in error now moves to dismiss the writ of error, mainly on the ground that the questions certified are not distinct points of law which can be properly certified to this court upon a difference of opinion between the Judges of the Circuit Court.

This subject has been so often and so recently discussed by this court, that it is hardly necessary to do more than to state the conclusion that must be drawn from the case as presented The law is so clearly stated, and the cases are so fully cited by *Mr. Justice* Gray in the recent case of *Jewell* v. *Knight*, 123 U. S. 426 [31: 190], that nothing further need be said. It is there laid down, first that the question certified "must be a distinct point or proposition of law, clearly stated, so that it can be definitely answered, without regard to other issues of law or fact in the case; secondly, it must be a question of law only, and not a question of fact, or of mixed law and fact; hence, it must not involve or imply a conclusion or judgment upon the weight or effect of testimony or facts adduced in the cause—as, for example, a question of fraud, which is necessarily compounded of fact and of law; thirdly, it must not embrace the whole case, even when its decision turns upon matter of law only; and even though it be split up into the form of questions." These propositions are illustrated by examples, which need not be repeated here. Applying them to the case in hand, we can have but little difficulty in disposing of the present motion. The [435] second question certified is clearly obnoxious to the second and third rules; it asks us to decide whether, upon all the evidence in the case, the defendant was entitled to a verdict. This would require us to decide upon the weight of the evidence and the conclusions to be drawn from the facts. It would also require us to decide the whole case.

The first question is not open to these objections. It presents a single point of law, namely: whether parol e idence may or may not be introduced to explain such documents as those which were given in evidence by the defendant. We are not now asked to decide whether such evidence should have been allowed in this case. That will be the question for consideration when the case is argued on its merits. On the present motion we are only required to decide whether the question is one of pure law, and one that presents but a single point for consideration. We think it is of that character. If only a single writing had been offered in evidence by the defendant, the question whether parol evidence could have been given to alter or explain it would clearly have been a single question of law. The fact that many writings were offered, all of the same general character, and offered to prove the same fact, does not make the case to differ.

The motion to dismiss the writ must be denied.

UNITED STATES, *Appt.*

v.

JOSEPH McDONALD.

(See S. C. Reporter's ed. 471-474.)

Traveling expenses of naval officers, when allowed.

1. The Act of June 30, 1876, having repealed the Act of June 16, 1874, so far as it applied to the traveling expenses of officers of the navy, became operative upon the date of its approval, and thereafter such traveling expenses were regulated and defined by its provisions.

2. Where a part of a journey of a boatswain in the navy was performed prior to the passage of the Act of June 30, 1876, and part of such journey was performed after the passage of such Act, for the latter part of such journey such officer is entitled to receive the milage provided by such Act.

[No. 1161.]

Submitted Nov. 5, 1888. Decided Nov. 26, 1888.

APPEAL from a judgment of the Court of Claims, in favor of claimant for milage. *Affirmed.*

The facts are stated in the opinion.

Messrs. **A. H. Garland,** *Atty-Gen.*, **Robbert A. Howard,** *Assist. Atty-Gen.*, and **F. P. Dewees,** for appellant.

Messrs. **Robert B. Lines** and **John Paul Jones,** for appellee:

A statute takes effect from the time of its approval, unless some other date be expressed therein.

Burgess v. *Salmon*, 97 U. S. 381 (24:1104).

A public office is not a contract.

Embry v. *U. S.* 100 U. S. 680 (25:772).

Mr. Justice **Lamar** delivered the opinion of [472] the court:

This is an appeal by the United States from a judgment of the court of claims. The appellee, Joseph McDonald (plaintiff below), a boatswain in the navy, on the 21st of June, 1876, was ordered by Rear-Admiral Werden, commanding at Callao, Peru, "to proceed to your home in the United States, and, upon your arrival, report to the Honorable the Secretary of the Navy." Pursuant to said order, McDonald traveled from Callao to Washington, *via* Panama, and reported as directed.

By the Act of June 16, 1874, 18 Stat. at L. 72, "only actual traveling expenses" were "allowed to any person holding employment or appointment under the United States." By the Act of June 30, 1876, 19 Stat. at L. 65, so much of the preceding Act as was "applicable to officers of the navy" was repealed, "and the sum of 8 cents per mile" was "allowed such officers" "in lieu of their actual expenses."

The journey from Callao to Panama was

made prior to June 30, 1876, and from Panama to Washington after that date. He was paid his actual traveling expenses for the whole distance, to wit: $256.60, under the first section of the Act of June 16, 1874. McDonald claimed that he should have received 8 cents per mile for the distance actually traveled, under the Act of June 30, 1876, which would have been $368, or $111.40 in excess of the amount received by him.

The Treasury Department having refused to [473] accede to his demand, he brought suit in the court of claims against the United States to recover said sum of $111.40.

That court held that McDonald should receive only his actual expenses for that part of his journey performed prior to the passage of the Act of June 30, 1876, to wit, from Callao to Panama, and milage for that portion performed after the passage of said last mentioned Act, to wit, from Panama to Washington; and rendered judgment in his favor accordingly for $74, that amount being the excess of such milage from Panama to Washington, over and above his actual traveling expenses for that portion of his journey. An appeal by the United States from this judgment brings the case here.

It is contended on behalf of the United States that the order was made and the travel undertaken while the Law of 1874 was in force, and therefore, with the understanding that only actual traveling expenses should be paid; and that the rule as to payment under a contract is that the terms under which the contract is undertaken shall control the amount to be paid. The reply to this is that the claim of this officer rests not upon any contract, expressed or implied, with the Government, but upon the Acts of Congress which provide for his compensation. The case cited by the Assistant Attorney-General in support of his contention (*Packet Co.* v. *Sickles*, 10 How. 419) was a suit upon a special contract between private parties.

The compensation paid to public officers of the United States for their services, or for traveling expenses incidental thereto is always under the control of Congress, except in the cases of the salaries of the President and the Judges of the Courts of the United States. As said by this court in *Embry* v. *United States*, 100 U. S. 685 [25:773] "All agree that Congress has full control of salaries, except those of the President and Judges of the Courts of the United States. The amount fixed at any one time may be added to or taken from at will. No officer except the President, or a Judge of a Court of the United States, can claim a contract right to any particular amount of unearned compensation."

The Act of June 30, 1876, having repealed [474] that of June 16, 1874, so far as it applied to the traveling expenses of officers of the navy, became operative upon the date of its approval, and thereafter the traveling expenses were regulated and defined by its provisions. Had the court decided in favor of the contention of the appellant that the claimant was entitled to his traveling expenses only, it would have enforced a repealed statute, and would have disregarded the provisions of existing law.

The judgment of the Court of Claims is affirmed.

TOWN OF DANVILLE, VA., *Appt.*, [503]
v.
J. WILLCOX BROWN ET AL.

(See S. C. Reporter's ed. 503-505.)

Appeals from circuit courts—time to file bond on writ of error.

1. Appeals from the circuit courts are subject to the same rules, regulations and restrictions as are, or may be, prescribed in cases of writs of error.
2. The time for giving security upon a writ of error, provided by section 1007 of the Revised Statutes, is sixty days, exclusive of Sundays; the words "Sundays exclusive," in the first clause of the section, are also applicable to the second clause.

[No. 1109.]

Argued Nov. 26, 1888. Decided Dec. 3, 1888.

APPEAL from a decree of the Circuit Court of the United States for the Western District of Virginia.

On motion to vacate a supersedeas. *Denied.*

The facts are stated in the opinion.

Mr. **Frank P. Clark**, for appellees, in support of motion:

The bond was filed too late and the supersedeas must be vacated.

Rev. Stat. § 1007; *U. S.* v. *Hooe*, 7 U. S. 3 Cranch, 73 (2: 370); 2 Stat. at L. 244, § 2, Act of 1803, re-enacted § 1012, R. S.; *Teleg. Co.* v. *Eyser*, 86 U. S. 19 Wall. 419 (22: 43); *Boise Co.* v. *Gorman*, 86 U. S. 19 Wall. 661 (22: 226); *Wurts* v. *Hoagland*, 105 U. S. 701 (26: 1109); *Western Air Line Construction Co.* v. *McGillis*, 127 U. S. 776 (*ante*, 324).

The terms of the statute must be strictly complied with.

Adams v. *Law*, 57 U. S. 16 How. 144 (14: 880); *Hudgins* v. *Kemp*, 59 U. S. 18 How. 535 (15: 513); *French* v. *Shoemaker*, 79 U. S. 12 Wall. 100 (20: 271); *Bigler* v. *Waller*, 79 U. S. 12 Wall. 149 (20: 261); *Kitchen* v. *Randolph*, 93 U. S. 89 (23: 811); *Sage* v. *Central R. Co.* 93 U. S. 412 (23: 933).

Section 1007, Rev. Stat., invests the court with discretion in the matter of such an application.

Sage v. *Central R. Co. supra; Perry* v. *Wilson*, 7 Mass. 394; *Fishmongers' Co.* v. *Robertson*, 3 Man. G. & S. 974.

Messrs. Geo. C. Cabell and **H. H. Marshall**, for appellant, in opposition:

Upon such grounds as the appellees suggest, the supreme court has often declined to dismiss appeals.

Peugh v. *Davis*, 110 U. S. 227 (28: 127); *O'Reilly* v. *Edrington*, 96 U. S. 724 (24: 659); *Seymour* v. *Freer*, 72 U. S. 5 Wall. 822 (18:564); *Brobst* v. *Brobst*, 69 U. S. 2 Wall. 96 (17: 905); *Anson* v. *Blue Ridge R. Co.* 64 U. S. 23 How. 1 (16: 517); *Sage* v. *Central R. Co.* 93 U. S. 412, 417 (23: 933, 935); *Spalding* v. *N. Y.* 43 U. S. 2 How. 66 (11: 181).

The bond was not essential and the court has allowed appellant to give bond in this court.

Edmonson v. *Bloomshire*, 74 U. S. 7 Wall. 311 (19: 92); *Dodge* v. *Knowles*, 114 U. S. 430 (29: 144); *Dayton* v. *Lash*, 94 U. S. 112 (24:33); *Nat. Bank* v. *Bank of Commerce*, 99 U. S. 608 (25: 362); *Brown* v. *McConnell*, 124 U. S. 489 (31: 495); *Hewitt* v. *Filbert*, 116 U. S. 142 (29: 581); *Stewart* v. *Masterson*, 124 U. S. 493 (31 507); *Kitchen* v. *Randolph*, 93 U. S. 92 (23:812);

Western Air Line Construction Co. v. *McGillis*, 127 U. S. 776, 777 (*ante* 324, 325).

Mr. Chief Justice **Fuller** delivered the opin-
504] ion of the court:

This is a motion to vacate a *supersedeas*, "for the reason that the bond was not filed within the time prescribed by statute."

The decree was entered March 29, 1888, and concludes as follows: "And the defendant, the Town of Danville, prays an appeal from the aforesaid decree in open court, and it is allowed; and if a *supersedeas* is desired the amount of the bond is fixed at one hundred thousand dollars." On the 31st of May the appeal bond of the Town in the sum of one hundred thousand dollars was duly approved by the circuit judge, and citation signed, but the bond was not filed in the clerk's office until June 1.

Appeals from the circuit courts are "subject to the same rules, regulations, and restrictions as are or may be prescribed in law in cases of writs of error." Rev. Stat. § 1012.

Section 1007 of the Revised Statutes reads thus:

"In any case where a writ of error may be a *supersedeas* the defendant may obtain such *supersedeas* by serving the writ of error, by lodging a copy thereof for the adverse party in the clerk's office where the record remains, within sixty days, Sundays exclusive, after the rendering of the judgment complained of, and giving the security required by law on the issuing of the citation. But if he desires to stay process on the judgment, he may, having served his writ of error as aforesaid, give the security required by law within sixty days after the rendition of such judgment, or afterward, with the permission of a justice or judge of the appellate court."

The bond here was filed within sixty days, excluding Sundays, and the appeal was thereby perfected, but it is contended that the exclusion of Sundays by the words of the statute
505] applies only to the lodging of the copy of the writ of error or the taking of the appeal, and not to the giving of security to operate as a *supersedeas*. We do not think so. The service of the writ of error must be within sixty days, "Sundays exclusive," and the party appealing may, "having served his writ of error as aforesaid," give the security required by law to stay process upon the judgment "within sixty days" after the rendition of such judgment, or afterward, by special permission. This can only mean that he may give the security and so obtain the *supersedeas* within the same sixty days which is allowed him to serve the writ, or otherwise he would not have the time specifically allowed by the statute for such service.

At common law Sunday was *dies non juridicus*, and no strictly judicial act could be performed upon that day; and this was recognized in the Judiciary Act, which expressly excluded Sundays in the computation of the ten days within which a *supersedeas* could be obtained. Secs. 22, 23, 1 Stat. at L. 84, 85.

By the 11th section of the Act of June 1, 1872, 17 Stat. at L. 198, it was provided "that any party or person desiring to have any judgment, decree, or order of any district or circuit court reviewed on writ of error or appeal, and to stay proceedings thereon during the pendency of such writ of error or appeal, may give the security required by law therefor within sixty days after the rendition of such judgment, decree, or order, or afterward with the permission of a justice or judge of the said appellate court." This enlarged the ten days to sixty, and permitted security to be given afterward; provided, however, that the writ had been served or appeal taken within the sixty days. *Kitchen* v. *Randolph*, 93 U. S. 86 [23: 810]. And when these provisions were carried into the Revised Statutes in section 1007, the words "Sundays exclusive," of the original Act being re-enacted in the first clause of the section, became clearly applicable to the second also.

As the bond was given in the amount specified in the decree, and was approved and filed in time, *the motion to vacate the supersedeas will be denied.*

Ex Parte: [544]

In the Matter of the Petiton of the CHATEAUGAY ORE AND IRON COMPANY, *Petitioner.*

(See S. C. Reporter's ed. 544-557.)

Practice of state court—does not apply to bill of exceptions, or writ of error—when party estopped—rules of circuit court—mandamus to compel settlement of exceptions.

1. The practice and rules of the state court do not apply to proceedings in the circuit court, taken for the purpose of reviewing in this court a judgment of the circuit court.
2. The preparation, perfecting, settling and signing of a bill of exceptions, are not required by section 914 of the Revised Statutes, to conform to the practice in the courts of record of the State within which the circuit court is held.
3. The manner or the time for the removal of a case by a writ of error from one federal court to another is to be regulated exclusively by Acts of Congress, or, when they are silent, by the common law or by the rules and practice of the courts of the United States.
4. Where the defendant prepared and served a bill of exceptions within the forty days allowed by the order of the court, and it was retained by the plaintiff for ten days after its service; and he then obtained, by stipulation, from the defendant, ten days' more time to prepare and serve amendments thereto, and the notice of settlement was accepted and written admission of its service was given, and it was retained by him—the plaintiff was estopped from raising the objection that the time to make and serve the bill of exceptions had expired.
5. The rules of the Circuit Court for the Southern District of New York clearly contemplate proceedings to perfect a bill of exceptions within the times limited by those rules without reference to the expiration of a term.
6. A writ of mandamus may properly be issued by this court, to compel the judge of an inferior court to settle and sign a bill of exceptions.

[No. 3 Orig.]

Argued Nov. 13, 1888. Decided Dec. 10, 1888.

ON PETITION for a writ of mandamus to compel the Judge, who held a Circuit Court of the United States, to settle and sign a bill of exceptions. *Mandamus issued.*

The facts are fully stated in the opinion.

Messrs. **Edmund Wetmore** and *Frank E. Smith*, for petitioner:

It is a general rule that a bill of exceptions must be signed by the judge during the term at

which judgment is rendered; but this limit of time may be extended by the general rules of a court, by a special order of court, or by consent of parties.

Müller v. *Ehlers*, 91 U. S. 249 (23:319); *Stanton* v. *Embrey*, 93 U. S. 548, 550 (23:983); *Hunnicutt* v. *Peyton*, 102 U. S. 333 (26:113); *Davis* v. *Patrick*, 122 U. S. 138, 140, 148 (30:1090, 1091); *U. S.* v. *Breitling*, 61 U. S. 20 How. 252 (15:900).

If it be held that the judgment was rendered at the October Term, then the time for signing and settling the bill of exceptions was duly extended beyond said term, by the order of the court made at the close of the trial allowing forty days for that purpose, and by the consent of counsel for the adverse party. The adverse party elected to remain in court, delayed the proceedings by asking time to propose amendments, took part in the proceedings by preparing and serving amendments, and recognized them as pending down to the very last moment by receiving and retaining the notice of settlement.

These acts amounted to a consent on the part of the adverse party, to enlarge the time within which the bill of exceptions might be allowed.

Hart v. *Small*, 4 Paige, 288; *Silliman* v. *Clark*, 2 How. Pr. 160; *N. Y. Cent. Ins. Co.* v. *Kelsey*, 13 How. Pr. 535; Tidd, Pr. 513.

When a bill of exceptions is served, the bill ought to be deemed as in the hands of the court.

Ah Lep v. *Gong Choy*, 13 Or. 205.

The signing of a bill of exceptions is a mere ministerial act, which might, perhaps, be performed by the judge anywhere; but the settlement of the bill is in its nature judicial.

Tweed v. *Davis*, 1 Hun, 252, 255.

It can, therefore, be performed only within the territorial limits of the court in which the cause is pending.

Judicial acts done by a judge without the territorial limits of his court are nullities.

Buchanan v. *Jones*, 12 Ga. 612; *Northrop* v. *People*, 37 N. Y. 203.

It was impossible for the petitioner to proceed with the settlement of the bill during the period when the judge was absent from the district. Delay during that period cannot prejudice the petitioner, for it was the act of the court.

Broom, Legal Maxims, 86; *People* v. *Williams*, 91 Ill. 87; *State* v. *Dyer*, 99 Ind. 426.

The judgment, although in form entered on January 31, 1888, and during the October Term, did not in law become a final judgment until the April Term, when the order of April 17 was made, vacating the stay of proceedings; and a bill of exceptions tendered at the April Term was therefore in time.

Brockett v. *Brockett*, 43 U. S. 2 How. 238 (11:251); *Memphis* v. *Brown*, 94 U. S. 715 (24:244); *Texas & P. R. Co.* v. *Murphy*, 111 U. S. 488 (28:492); *People* v. *Gary*, 105 Ill. 264; *Greeley* v. *Percival*, 21 Fla. 428; *N. Y. C. etc. R. Co.* v. *Doane*, 2 West. Rep. 733, 105 Ind. 92.

For the purpose of preparing a bill of exceptions, the trial of a cause is not completed, nor is the judgment deemed to be rendered so long as a motion for a new trial is pending.

People v. *Gary*, and *Greeley* v. *Percival*, *supra*.

The settlement of bills of exceptions is a matter of practice which, under section 914 of the Revised Statutes, is governed by the rules of the state courts.

Wayman v. *Southard*, 23 U. S. 10 Wheat. 1 (6:253); *Lamaster* v. *Keeler*, 123 U. S. 376 (31:238).

The writ of mandamus is the appropriate remedy for an erroneous refusal by a judge to settle and sign a bill of exceptions.

Ex parte Crane, 30 U. S. 5 Pet. 190 (8:92); *People* v. *Williams*, 91 Ill. 87; *Benedict* v. *Howell*, 39 N. J. L. 221; *Page* v. *Clopton*, 30 Gratt. 415; *State* v. *Hawes*, 43 Ohio St. 16; *People* v. *Van Buren, Circuit Judge*, 41 Mich. 725; *Seibright* v. *State*, 2 W. Va. 592.

Messrs. **R. D. Mussey** and **L. E. Chittenden**, for respondent:

The writ of mandamus cannot be used to control the discretion of an inferior tribunal while acting, or to reverse its decisions when made.

Ex parte Burtis, 103 U. S. 238 (26:392); *Ex parte Flippin*, 94 U. S. 348 (24:194); *Carrick* v. *Lamar*, 116 U. S. 423 (29:677); *Ex parte Perry*, 102 U. S. 183 (26:43); *Ex parte Schwab*, 98 U. S. 240 (25:105); *Ex parte Loring*, 94 U. S. 419 (24:165); *Ex parte Whitney*, 38 U. S. 13 Pet. 404 (10:221).

The court below acted upon the petitioner's motion; and his motion that the bills of exception be signed was denied. This fact is fatal to the petition.

Ex parte Morgan, 114 U. S. 174 (29:135); *Ex parte Hughes*, 114 U. S. 147 (29:134); *Ex parte Brown*, 116 U. S. 401 (29:676).

The court below must be regarded as the judge of its own rules and sessions.

Manhattan L. Ins. Co. v. *Francisco*, 84 U. S. 17 Wall. 672 (21:698); *U. S.* v. *Breitling*, 61 U. S. 20 How. 252 (15:900).

The decision of the circuit court was right. It followed the reported decisions of this court, and, had it decided otherwise, this court would have disregarded the exceptions.

Müller v. *Ehlers*, 91 U. S. 249 (23:319); *Walton* v. *U. S.* 22 U. S. 9 Wheat. 651 (6:182); *Jones* v. *Grover & B. S. Machine Co.* 97 U. S. 24 L. ed. 925; *Hunnicutt* v. *Peyton*, 102 U. S. 333 (26:113); *Bronson* v. *Schulten*, 104 U. S. 410 (26:797); *Phillips* v. *Negley*, 117 U. S. 665 (29:1013); *Brooks* v. *Burlington & S. W. R. Co.* 102 U. S. 107 (26:91).

Mr. Justice **Blatchford** delivered the opinion of the court:

[545] A petition was filed in this court, by the Chateaugay Ore and Iron Company, on the 8th of October, 1888, praying this court to issue a writ of mandamus to the Honorable Nathaniel Shipman, District Judge of the District of Connecticut, assigned to hold, and who held, the Circuit Court of the United States for the Southern District of New York, to settle a bill of exceptions according to the truth of the matters which took place before him on the trial of an action at law in that court, brought by Theodore A. Blake against the Chateaugay Ore and Iron Company, and to sign the same, when so settled, as of the 10th of April, 1888, that being the day when such bill of exceptions was submitted to him.

On the 15th of October, 1888, this court made an order that cause be shown by *Judge* Shipman, and by the plaintiff in the suit, on the 12th

of November, 1888, why a writ of mandamus should not issue as prayed in the petition. The plaintiff showed cause, in answer to the petition, and appeared by counsel; but no cause was shown by *Judge* Shipman, although the order was served on him personally on the 18th of October, 1888. We are, therefore, left without any authoritative statement from the Judge as to the grounds on which he declined, as he did, to settle and sign a bill of exceptions, and can gather those grounds only from the statements of the petition for the writ and of the answer of the plaintiff.

There were two actions, each brought to recover the price of goods sold and delivered by the plaintiff to the defendant, which actions were consolidated into one. The trial was had before *Judge* Shipman and a jury, which, on the 25th of January, 1888, rendered a verdict for the plaintiff for $9,574.53. The docket minute of the court, of the proceedings after [546] verdict, as first entered, showed that the court then made the following order: "It is ordered that the defendant have forty days from January 25, 1888, within which to prepare and serve a case herein, with leave to turn the same into a bill of exceptions. It is further ordered that judgment may be entered on said verdict, and that the defendant have a stay of execution until the decision of the motion for a new trial herein." On the 31st of January, 1888, a judgment was rendered in the action, in favor of the plaintiff, for $9,665.39, being the amount of the verdict and costs.

On the third of March, 1888, being the thirty-eighth day after the 25th of January, 1888, the defendant served upon the attorneys of record for the plaintiff a proposed bill of exceptions. It was accepted and retained by such attorneys, and the service thereof was admitted in writing. On the 18th of March, 1888, the attorneys for the plaintiff applied to the attorneys for the defendant for ten days' additional time within which to prepare and serve such amendments as they wished to make to the proposed bill of exceptions. In doing this, they acted upon the view that their time to prepare and serve such amendments did not expire until the 18th of March, 1888. Their application was granted, and a stipulation for ten days' additional time was signed by the defendant's attorneys. On the 23d of March, 1888, the attorneys for the plaintiff served upon the attorneys for the defendant a paper containing seventy-seven amendments, which they desired to make to such proposed bill of exceptions. Some of such proposed amendments were agreed to by the defendant, while others were not agreed to. On the 27th of March, 1888, the attorneys for the defendant served upon the attorneys for the plaintiff a notice that the proposed bill of exceptions and proposed amendments would be presented to *Judge* Shipman, for settlement and signature, on the 10th of April, 1888, at the United States Court Rooms, in the City of New York. Such notice of settlement was received and retained, without objection, by the attorneys for the plaintiff; and a written admission of the service thereof was given by them to the attorneys for the defendant.

[547] On the 10th of April, 1888, the defendant appeared by its attorneys before *Judge* Shipman, and moved that the proposed bill of exceptions be settled and signed. The attorneys for the plaintiff appeared and opposed the motion, upon the ground that the term of court at which the action was tried had expired on the 31st of March; that the forty days' time allowed by the court, within which to prepare and serve a bill of exceptions, had also expired; and that the plaintiff was out of court and the court had no longer any jurisdiction over him. The motion was continued until the next day, when, both parties again appearing, *Judge* Shipman announced his decision, sustaining the objections made on behalf of the plaintiff, for the reason, then stated orally by him, that the term of the court at which the action was tried had expired, and the forty days originally allowed by the court had also expired, and no order had been made, or consent given by the plaintiff or his attorneys, extending the time for signing the bill of exceptions beyond the term at which the cause was tried, and no very extraordinary circumstances were shown in the case, to justify the court in entertaining the application; so that, under the rule laid down in the case of *Müller* v. *Ehlers*, 91 U. S. 249 [23:319], the application of the defendant for the settlement and signing of the bill of exceptions must be denied.

On the denial of such motion, and on the 11th of April, 1888, the court made an order, entitled in the cause, which, after reciting as follows, "In this case, at the October Term, 1887, of this court after judgment upon the verdict for the plaintiff, a stay of forty days, and until the decision of any motion for a new trial upon a bill of exceptions, having been granted, and the said forty days and the said October Term of this court having passed and no proper foundation by bill of exceptions having been taken by the defendant to move for a new trial," ordered that such stay of execution be vacated.

On the 17th of April, 1888, the court, after hearing both parties, made an order amending the docket minute of the proceedings after verdict, and the judgment roll founded thereon, by striking out, in such docket minute, everything after the words "it is ordered," and [548] inserting the following: "Mr. Kellogg moves orally to set aside the verdict as against evidence and for a new trial, upon a bill of exceptions, to be thereafter drawn. The court overruled the motion to set aside the verdict, and denied the same, and ordered judgment for plaintiff upon the verdict to be entered, and that the defendant have a stay of forty days to prepare and serve its bill of exceptions, and a further stay until the decision of such motion for a new trial upon said bill of exceptions." The same order directed that the order of April 11, 1888, be resettled and entered with the following recital: "In this case, at the October Term of this court, and on the 25th day of January, 1888, after verdict for the plaintiff, counsel for the defendant having orally moved for a new trial, upon a bill of exceptions, to be thereafter drawn, and the court having then ordered judgment for the plaintiff to be entered on said verdict, and that a stay of proceedings upon the judgment for forty days, and until the decision of said motion, be granted to the defendant, and the said October Term of this court having ended on the 31st day of March, 1888, and the said forty days having elapsed,

and no bill of exceptions having been presented to or allowed by the court, and there being no bill of exceptions upon which said motion for a new trial is to be based;" and with a direction "that the said stay of proceedings so granted be vacated and set aside."

Judge Shipman was duly designated to hold the Circuit Court for the Southern District of New York for two weeks beginning on the 16th of January, 1888. The session of the court held by him terminated on the 27th of January, 1888, and, during the time from that day until the first Monday of April, 1888, which was the second of April, when the April Term of that court began, *Judge* Shipman was assigned to hold no court within the Southern District of New York, and he was not at any time between the 27th of January, 1888, and the second of April, 1888, within the Southern District of New York for any official purpose.

A writ of error to remove the case to this court was allowed, on a bond approved to [549] operate as a supersedeas, and a citation was served. A transcript of the record was filed in this court on the 8th of October, 1888.

The foregoing facts are stated, partly from the papers in the application for the mandamus, and partly from the contents of such record.

We are of opinion that the writ of mandamus must issue. By Rules 67 and 69 of the Circuit Court for the Southern District of New York, which took effect on the first Monday of August, 1888, it is provided that, when exceptions to the opinion of the court are taken by either party on the trial of a cause, he shall not be required to prepare his bill of exceptions at the trial, but shall merely reduce the exceptions to writing, or the court will, on request, note the point, and the bill of exceptions shall afterwards be drawn up, amended, and settled, under the following regulations: The bill of exceptions shall be prepared and a copy thereof served upon the opposite party before judgment [552] is rendered on the verdict; the opposite party may, within four days after such service, propose amendments to the bill and serve a copy upon the party who prepared it; if the parties cannot agree in regard to the amendments, then, within four days after such service of a copy of the amendments, either party may give to the other notice to appear within a convenient time, and not more than four days after service of such notice, before the judge who tried the cause, to have the bill and amendments settled; the judge shall thereupon correct and settle the same as he shall deem to consist with the truth of the facts; but, if the parties shall omit, within the several times above limited, unless the same shall be enlarged by a judge, the one to propose amendments, and the other to notify an appearance before the judge, they shall respectively be deemed, the former to have agreed to the bill as prepared, and the latter to have agreed to the amendments as proposed; and if the party omit to make a bill within the time above limited, unless the same shall be enlarged as aforesaid, he shall be deemed to have waived his right thereto.

A corresponding practice prevails in the Supreme Court of the State of New York, by its rules, with variations as to time. Under those rules, a case, or a case and exceptions, or a case containing exceptions, on a trial before a jury, is to be made, and a copy thereof served on the opposite party, within ten days after the trial. The party served may, within ten days thereafter, propose amendments thereto and serve a copy on the party proposing the case or exceptions, who may within four days thereafter serve the opposite party with a notice that the case or exceptions, with the proposed amendments, will be submitted at a time and place to be specified in the notice, not less than four nor more than twenty days after service of such notice, to the justice before whom the cause was tried, for settlement.

It is apparent that both parties in this case acted upon the view that the rule of practice of the Supreme Court of the State applied to the case; because the plaintiff, instead of serving on the defendant his proposed amendments to the bill within four days after the third of March, as required by the Rule of the Circuit Court, [553] waited ten days, under the Rule of the Supreme Court of the State, and then, on the 13th of March, obtained a stipulation from the defendants giving ten days' additional time to prepare and serve amendments. It may be that the defendant, in serving, on the 27th of March, a notice of settlement of fourteen days, for the 10th of April, on the plaintiff, intended to comply, as it in fact did comply, with the requirement of the rule of the state court that such notice should be a notice of not less than four nor more than twenty days; yet it also sufficiently complied with Rule 67 of the Circuit Court, which required a notice of not more than four days, because a notice of four days, served on the 27th of March, would have been for the 31st of March, and *Judge* Shipman was not then within the Southern District of New York, so as to be able to perform any judicial act there; nor did he come there, so as to be able to do so, until the second of April, 1888. Under these circumstances, the notice for the 10th of April was a reasonable compliance with the Rule of the Circuit Court.

We are of opinion that the practice and rules of the state court do not apply to proceedings in the Circuit Court taken for the purpose of reviewing in this court a judgment of the Circuit Court, and that such rules and practice, embracing the preparation, perfecting, settling and signing of a bill of exceptions, are not within the "practice, pleadings and forms and modes of proceeding" in the Circuit Court which are required, by section 914 of the Revised Statutes, to conform "as near as may be" to the "practice, pleadings and forms and modes of proceeding existing at the time in like causes in the courts of record of the State" within which the Circuit Court is held, "any rule of court to the contrary notwithstanding."

This court has had occasion several times to construe section 914. In *Nudd* v. *Burrows*, 91 U. S. 426 [23: 286], a state statute required a judge to instruct a jury only as to the law of a case; and provided that the written instructions of the court should be taken by the jury in their retirement and returned with the verdict, and that papers read in evidence might be carried from the bar by the jury. The court charged the jury upon the facts, and refused [554] to permit them to take to their room the written instructions given by the court, or papers

read in evidence. This court held that this was not error, because the personal conduct and administration of the judge in the discharge of his separate functions was not practice, or pleading, or a form or mode of proceeding, within the meaning of those terms in the Act of Congress.

In *Indianapolis & St. L. R. Co.* v. *Horst*, 93 U. S. 291 [23: 898] a state statute prescribed that the judge should require the jury to answer special interrogatories in addition to finding a general verdict. This court held that that provision did not apply to the courts of the United States; and that the Act of Congress did not apply to a motion for a new trial, nor affect the power of the Circuit Court to grant or refuse a new trial in its discretion. This last point was again so ruled in *Newcomb* v. *Wood*, 97 U. S. 581 [24: 1085].

In harmony with the foregoing decisions, we are of opinion that section 914 does not extend to the means of enforcing or revising a decision once made by the Circuit Court. Section 914 does not extend to proceedings to enforce a judgment, because by section 916 special provisions are made as to a remedy by execution or otherwise, to reach the property of a judgment debtor, by borrowing from the laws of the State only those remedies then already existing, or which should thereafter be adopted by general rules of the Circuit Court. *Lamaster* v. *Keeler*, 123 U. S. 376 [31: 238]. The object of section 914 was to assimilate the form and manner in which the parties should present their claims and defense, in the preparation for the trial of suits in the federal courts, to those prevailing in the courts of the State. As we have seen, it does not include state statutes requiring instructions to the jury to be reduced to writing, or those which permit such instructions, and certain papers read in evidence, to be taken by the jury when they retire, or those which require the jury to be directed, if they return a general verdict, to find specially upon particular questions of fact involved in the issues; and, as it does not apply to a motion for a new trial, nor affect the power of the Circuit Court to grant or refuse a new trial at its dis-
[555] cretion, so it does not cover any other means of enforcing or revising a decision once made by the Circuit Court. The manner or the time of taking proceedings as a foundation for the removal of a case by a writ of error from one federal court to another is a matter to be regulated exclusively by Acts of Congress, or, when they are silent, by methods derived form the common law, from ancient English Statutes, or from the rules and practice of the courts of the United States. The only regulation made by Congress as to bills of exceptions is that contained in section 953 of the Revised Statutes, which provides that they shall be sufficiently authenticated by the signature of the presiding judge, without any seal.

These views were adopted by the Circuit Court for the Southern District of New York, in *Whalen* v. *Sheridan*, 18 Blatchf. 324, and by the Circuit Court for the District of Massachusetts, in *United States* v. *Train*, 12 Fed. Rep. 852.

In the present case the defendant prepared and served its bill of exceptions within the forty days from January 25. The expression "prepare and serve," in the order allowing the forty days, clearly meant, in view of Rules 67 and 69 of the Circuit Court, that the proposed bill was to be prepared and served on the opposite party within the forty days, so that he might propose amendments to it within the time prescribed by the rules. It was so prepared and served within the forty days. It was retained by the plaintiff for ten days after its service. He then obtained, by stipulation, from the defendant, ten days' more time to prepare and serve amendments. The proposed amendments were served on the tenth day, and the notice of settlement was accepted, written admission of its service was given, and it was retained. Under these and the other circumstances above detailed, we think the defendant was entirely regular in its practice, and that the plaintiff was estopped from raising the objection which he made before *Judge* Shipman.

On the facts of the present case, the decision in *Müller* v. *Ehlers*, 91 U. S. 249 [23: 319], has no application. In that case, on a trial by the court, without a jury, of an action at law, there was a general finding for the plaintiff, and a motion for a new trial. The motion was con- [556]
tinued until the next term, when it was overruled, and judgment was entered on the finding. At the latter term, a writ of error, returnable to this court, was sued out, and the term was adjourned without any bill of exceptions having been signed or allowed, or any time having been given, either by consent of the parties or by order of the court, to prepare one. At the next ensuing term, and after the return day of the writ of error, a bill of exceptions was signed and filed by order of the court, as of the day the finding was made; and it did not appear that that had been done with the consent or knowledge of the plaintiff. On these facts, this court held that the order of the court below, directing the filing of the bill of exceptions as of the date of the finding, was a nullity, on the ground that the parties had, in due course of proceeding, both in law and in fact, been dismissed from the court. That decision has no application to the present case, because the rights of the defendant were saved by the express order of the court, made during the term, and by a sufficient compliance on the part of the defendant with the rules of the Circuit Court, and by what must be held to have been the consent of the plaintiff.

In this view of the case, the question whether the term at which the verdict was rendered expired on the 25th of February, being the Saturday next preceding the last Monday of February, or on the 31st of March, being the Saturday next preceding the first Monday of April, is immaterial. The Rules of the Circuit Court clearly contemplate proceedings to perfect a bill of exceptions within the times limited by those rules, without reference to the expiration of a term. By section 658 of the Revised Statutes, terms of the Circuit Court are appointed to be held in the Southern District of New York on the first Monday in April and the third Monday in October, "and for the trial of criminal causes and suits in equity" on the last Monday in February. The defendant contends that the October Term terminated at the beginning of the February Term, and the plaintiff contends that the October Term terminated at

the beginning of the April Term. We do not find it necessary to decide this question.

[557] A writ of mandamus may properly be issued by this court, to compel the judge of an inferior court to settle and sign a bill of exceptions. *Ex parte Crane*, 30 U. S. 5 Pet. 190 [8: 92]. Such a writ does not undertake to control the discretion of the judge as to how he shall frame the bill of exceptions, or as to how he shall decide any point arising on its settlement; but it only compels him to settle and sign it in some form.

The writ will issue in the terms of the prayer of the petition, commanding the Judge to settle the bill of exceptions tendered by the defendant, according to the truth of the matters which took place before him on the trial of the aforesaid action, and, when so settled, to sign it as of the 10th day of April, 1888, that being the day when the proposed bill and proposed amendments were submitted to him for settlement.

---

[560] WILLIAM GLASGOW, JR., Surviving Commissioner, etc. *Plff. in Err.*,

v.

JOHN BAKER ET AL.

(See S. C. Reporter's ed. 560–578.)

Jurisdiction of supreme court to review state judgment—Act of June 13, 1812—confirming St. Louis lands—Act of 1820—sufficiency of proof.

1. This court has jurisdiction to review a judgment of the supreme court of a State in an action to recover lands, where the matter in dispute arises either under the French Treaty of 1803, the Acts of Congress in regard to the lands, or the authority of some officer of the Government of the United States exercised over them.

2. The Act of June 13, 1812, by which certain town or village lots in or adjoining the then village of St. Louis and other villages or towns, which had been inhabited, cultivated or possessed prior to the 20th of December, 1803, were confirmed to the inhabitants of the respective towns or villages according to their several right or rights in common thereto, was a present grant, at the moment of its passage, of all the title of the United States to such land as had been so inhabited, cultivated or possessed prior to 1803, and operated to convey or confirm such titles and claims as came within its description.

3. The right of the grantee was not dependent on the *factum* of a survey under the Spanish Government; a patent to another after the passage of said Act, for any of these lands, would be void because the Government had already released all title and claim thereto.

4. Such lands did not afterwards pass to the State of Missouri, by virtue of the Act of 1820, for school purposes.

5. One who claims to have purchased the title arising from such occupation, cultivation or possession is not required to prove with certainty and precision the time when and the person who cultivated or occupied that precise property eighty or ninety years ago.

6. Neither the statute nor justice can require anything more than satisfactory proof that such lots had been inhabited, cultivated or possessed prior to the year 1803.

[No. 40.]

Argued Oct. 24, 25, 26, 1888. Decided Dec. 10, 1888.

IN ERROR to the Supreme Court of the State of Missouri, to review a judgment in favor of defendants, in an action of ejectment to recover lands. *Affirmed.*

Reported below, 85 Mo. 559.

This was an action of ejectment, begun in the state circuit court in 1853 by Glasgow, the plaintiff in error, and two others (since deceased), as Commissioners for the State of Missouri.

Plaintiff recovered of defendants a triangular shaped track, containing about fifty-three acres.

This judgment, on appeal by defendants to the St. Louis Court of Appeals, was affirmed; and upon a further appeal to the Supreme Court of Missouri, was by that court, in 1885, reversed, and a final judgment thereupon entered therein for the defendants.

From this last judgment the plaintiff has brought the case here by writ of error.

The further facts are stated in the opinion.

Messrs. Melvin L. Gray, **Elmer B. Adams** and **John W. Dryden**, for plaintiff in error:

The reservation contained in section 2 of the Act of June 13, 1812, did not prevent the Act of 1820 operating as a grant to Missouri of the land in dispute.

Hammond v. *St. Louis Public Schools*, 8 Mo. 74; *Eberle* v. *St. Louis Pub. Schools*, 11 Mo. 262; *Cabanné* v. *Walker*, 31 Mo. 285; *Kissell* v. *St. Louis Pub. Schools*, 16 Mo. 581; *S. C.* on app. 59 U. S. 18 How. 25 (15: 327); *Frisbie* v. *Whitney*, 76 U. S. 9 Wall. 187, 196 (19: 668, 671); *Yosemite Valley Case*, 82 U. S. 15 Wall. 87 (21: 85); *Ham* v. *Mo.* 59 U. S 18 How. 133 (15: 337); *S. C.* below, 19 Mo. 601.

The Act of 1820 was a compact, by one sovereign power with another, upon a valuable consideration. As such it should be construed more strictly than other Acts.

Cooper v. *Roberts*, 59 U. S. 18 How. 179, 180 (15: 340); *Beecher* v. *Wetherby*, 95 U. S. 517 (24: 440); *Ham* v. *Mo. supra.*

No means were provided by the Act of 1812 for selecting the particular lands which should constitute the one twentieth reserved for schools. The Act, therefore, was incapable of enforcement and of no effect.

Slidell v. *Grandjean*, 111 U. S. 413, 439 (28: 321, 330); *Menard* v. *Massey*, 49 U. S. 8 How. 293 (12: 1085); *Boyce* v. *Papin*, 11 Mo. 26; *Eberle* v. *St. Louis Pub. Schools*, Id. 264.

The reservation of 1812 was at that time but a mere float, and had not attached to the particular parcel, within the general survey of the town, that was granted by the Act of 1820 and so did not affect that grant.

Menard v. *Massey*, *supra*; *Fremont* v. *U. S.* 58 U. S. 17 How. 542, 558 (15: 241, 246); *Cousin* v. *Labatut*, 60 U. S. 19 How. 203, 210 (15: 601, 605); *Henshaw* v. *Bissell*, 85 U. S. 18 Wall. 255, 266 (21: 835, 839); *Miller* v. *Dale*, 92 U. S. 473, 476 (23. 785, 786); *U. S.* v. *McLaughlin*, 127 U. S. 450 (*ante*, 213).

The duty of fixing the outboundary, and selecting the lots to satisfy the reservation, belonged to the political authorities. Their action as to that was conclusive upon the schools of the town.

West v. *Cochran*, 58 U. S. 17 How. 414, 416 (15: 114, 116); *Stanford* v. *Taylor*, 59 U. S. 18 How. 412 (15: 454); *Bryan* v. *Forsyth*, 60 U. S. 19 How. 336 (15: 675); *Meehan* v. *Forsyth*, 65 U. S. 24 How. 177 (16: 731); *Carondelet* v. *St. Louis*, 66 U. S. 1 Black, 179 (17: 102); *Glasgow* v. *Hortie*, 66 U. S. 1 Black, 602 (17: 114); *John-*

son v. *Towsley*, 80 U. S. 13 Wall. 72 (20: 485); *French* v. *Fyan*, 93 U. S. 171 (23: 813).

The grant by the Act of 1820 gave a good title to the State.

Dredge v. *Forsyth*, 67 U. S. 2 Black, 569 (17: 255); *Beecher* v. *Wetherby*, *supra*; *Natoma Water & Min. Co.* v. *Bugbey*, 96 U. S. 165 (24:621).

The United States is presumed to have title to all land which it grants.

Long v. *McDow*, 87 Mo. 201; *Minter* v. *Crommelin*, 59 U. S. 18 How. 87 (15: 279).

An outstanding title, if barred by time, or abandoned, will not avail.

Foster v. *Joice*, 3 Wash. C. C. 501; *Jackson* v. *Hudson*, 3 Johns. 386; *Bennett* v. *Horr*, 47 Mich. 223; *McDonald* v. *Schneider*, 27 Mo. 410; *Howard* v. *Massengale*, 13 Lea, 577, 585; *Peck* v. *Carmichael*, 9 Yerg. 325; *Hall* v. *Gittings*, 2 Harr. & J. 112.

Abandonment was a familiar mode of losing title to land under Spanish Law.

Fine v. *St. Louis Pub. Schools*, 23 Mo. 576; *Lajoye* v. *Primm*, 3 Mo. 529; *Page* v. *Scheibel*, 11 Mo. 183; *Byron* v. *Sarpy*, 18 Mo. 458; *Soulard* v. *Clark*, 19 Mo. 570; *Barada* v. *Blumenthal*, 20 Mo. 162; *St. Louis* v. *Toney*, 21 Mo. 254; *Clark* v. *Hammerle*, 36 Mo. 620; *Vasquez* v. *Ewing*, 42 Mo. 247.

Lands thus lost by abandonment, or forfeiture, before 1812, or whose former owners had died without heirs, were not granted to anyone by the Act of 1812.

Page v. *Scheibel*, 11 Mo. 183, 185; *Byron* v. *Sarpy*, 18 Mo. 458; *Strother* v. *Lucas*, 37 U. S. 12 Pet. 410 (9: 1137).

The lots in the common field were not confirmed by the Act of 1812 in a body, as one field. Each lot was confirmed severally to its separate owner, or claimant, by its boundaries, as they actually existed on the ground.

Guitard v. *Stoddard*, 57 U. S. 16 How. 494 (14: 1030); *Glasgow* v. *Lindell*, 50 Mo. 60, 79, 80.

The Grand Prairie common field was not inclosed, but was an open area of land. It was not a field in the usual sense of the word.

Mackay v. *Dillon*, 45 U. S. 4 How. 421 (11: 1038); *Guitard* v. *Stoddard*, *supra*; *Les Bois* v. *Bramell*, 45 U. S. 4 How. 449 (11: 1051); *Page* v. *Scheibel*, 11 Mo. 174.

A grant to A or B is of no effect, because no one can say which is, and which is not, the grantee.

Bacon, Abr. title, *Grant*, C. pp. 510, 511; 1 Shep. Touch. 237; *Thomas* v. *Marshfield*, 10 Pick. 367; *Jackson* v. *Sissons*, 3 Johns. Cas. 602; *Jackson* v. *Cory*, 8 Johns. 385; 3 Wash. Real Prop. 5th ed. 281, 566; 1 Wood Convey. 171.

The documentary evidence was not sufficient to establish presumptively grants under the Act of 1812, to the claimants.

Gamache v. *Piquignot*, 57 U. S. 16 How. 451 (14: 1012); *Soulard* v. *Allen*, 18 Mo. 591; *Buyck* v. *U. S.* 40 U. S. 15 Pet. 215 (10: 715); *U. S.* v. *Delespine*, 40 U. S. 15 Pet. 319 (10:753); *U. S.* v. *Miranda*, 41 U. S. 16 Pet. 153 (10:920); *Slidell* v. *Grandjean*, 111 U. S. 412 (28: 321).

The confirmation of the Bizet claim by the Act of 1836 would be junior to the title of plaintiff under the Act of 1820. It would begin in 1836.

Les Bois v. *Bramell*. 45 U. S. 4 How. 449 (11: 1051); *Menard* v. *Massey*, 49 U. S. 8 How. 293 (12. 1085); *Delauriere* v. *Emison*, 56 U S. 15 How. 525 (14: 800); *S. C.* below, 14 Mo. 37; *Dent* v. *Sigerson*, 29 Mo. 489; *Cabanné* v. *Walker*, 31 Mo. 274; *Waller* v. *Von Phul*, 14 Mo. 84.

The surveys of Cozens were no evidence of the location of the lots confirmed to the several claimants, because of their nonconformity to the descriptions of those lots as given in the confirmations.

U. S. v. *Halleck*, 68 U.S. 1 Wall. 439 (17:664); *Fossat* v. *U. S.* 69 U. S. 2 Wall. 649 (17: 789); *Villalobos* v. *U. S.* 51 U. S. 10 How. 541 (13: 531); *U. S.* v. *Levy*, 38 U. S. 13 Pet. 81 (10:68); *U. S.* v. *Forbes*, 40 U. S. 15 Pet. 173 (10: 701).

The questions raised by the assignments of error are federal questions, which bring the case within the jurisdiction of this court.

Murdock v. *Memphis*, 87 U. S. 20 Wall. 590 (22: 429); *Mackay* v. *Dillon*, 45 U S. 4 How. 421 (11: 1038); *Cousin* v. *Labatut*; 60 U. S. 19 How. 202 (15: 601); *Carondelet* v. *St. Louis*, 66 U. S. 1 Black, 179 (17: 102); *Maguire* v. *Tyler*, 66 U. S. 1 Black, 195 (17: 137); *Gamache* v. *Piquignot*, 57 U. S. 16 How. 451 (14: 1012); Mo. Rev. Stat. 1879, § 3781.

Messrs. **Rob't E. Collins**, *John Flourney*, **Thos. T. Gantt** and **Charles Gibson**, for defendants in error:

All of the land in controversy in this case is a part of the Grand Prairie common field adjoining the Town of St. Louis in the former Territory of Missouri; and, all of said common field having been inhabited, cultivated or possessed as common field lots, prior to the 20th day of December, 1803, by inhabitants of said Town of St. Louis, the title of the United States to said land was vested in fee simple absolute, without requiring survey or patent, in such inhabitants of St. Louis who so inhabited, cultivated or possessed said common field lots, under and by virtue of the Act of Congress of June 13, 1812, entitled "An Act Making Further Provision for Settling the Claims to Land in the Territory of Missouri."

Page v. *Scheibel*, 11 Mo. 167; *Milburn* v. *Hardy*, 28 Mo. 514; *Glasgow* v. *Lindell*, 50 Mo. 60; *Glasgow* v. *Baker*, 72 Mo. 441; *Guitard* v. *Stoddard*, 57 U. S. 16 How. 494 (14: 1030); *Glasgow* v. *Hortiz*, 66 U. S. 1 Black, 595 (17: 110).

It is because a plaintiff is the only person entitled to the land sued for in ejectment, that he is permitted to recover. He must show both a legal interest and a possessory title, to the exclusion of all others.

Mo. Rev. Stat. 1879, p. 373, § 2240; *Beal* v. *Harmon*, 38 Mo. 435; 2 Greenl. Ev. § 303; Adams, Eject. 33.

The fact that the land in controversy is not within the outboundary line, as platted on Map X, does not affect the titles to common field lots.

Milburn v. *Hardy*, and *Glasgow* v. *Hortiz*, *supra*.

The proceedings before the recorder of land titles and the board of commissioners, together with the certificate of confirmation and the United States surveys, are, as against the plaintiff in error, undisputed proof of a grant by the Act of 1812 to the persons named of the land embraced in said surveys; and said grant

is a better title than that of the plaintiff in error claiming under the Act of 1820.

Soulard v. *Allen*, 18 Mo. 591; *Harrison* v. *Page*, 16 Mo. 182; *Gamache* v. *Piquignot*, 17 Mo. 310; *Milburn* v. *Hardy*, 28 Mo. 519.

Mr. Justice **Miller** delivered the opinion of the court:

The writ of error in this case brings before us for review a judgment of the Supreme Court of the State of Missouri, rendered on the 11th day of May, 1885, in a suit commenced in the Saint Louis Land Court of Saint Louis County, in that State, on the 15th day of September, 1853.

This suit is in the nature of an action of ejectment to recover possession of about two hundred acres of land. It was tried three or four times in the court of original jurisdiction, the last trial resulting in a verdict for fifty-three acres of said land in favor of plaintiff; has been once or twice before the court of appeals, a court of intermediate review; and has been three times heard and decided in the Supreme [561] Court of the State of Missouri. All of the decisions of the latter court have been in favor of the defendants, and the last one is now before us. It is one of a class of cases very numerous, many of which have reached this court, growing out of claims for land which had their inception prior to the Treaty of 1803, by which the United States obtained the region of country called "Louisiana" from France. Article III of that Treaty reads as follows:

"The inhabitants of the ceded territory shall be incorporated in the Union of the United States, and admitted as soon as possible, according to the principles of the Federal Constitution, to the enjoyment of all the rights, advantages, and immunities of citizens of the United States; and in the mean time they shall be maintained and protected in the free enjoyment of their liberty, property, and the religion which they profess." 8 Stat. at L. 200.

This provision for the protection of the rights of private property is probably no more than what follows by the principles of the law of nations upon the transfer of the allegiance of the inhabitants of a given territory from one government to another. The City of New Orleans was the principal center of population of this large extent of country at the time the Treaty was made with France, but there were also many villages and towns, generally located along the Mississippi River and upon some of the other navigable streams; and the Town of Saint Louis seems to have become the largest of these in the northern part of it at the beginning of the century. This territory, known as Louisiana, was for many years the subject of negotiations and contests between the Governments of France and Spain. It had been held by the latter power and under its control for some thirty-eight years, when, by the Treaty of San Ildefonso, October 1, 1800, it was re-ceded by Spain to France. No actual transfer of possession had been made under this Treaty at the time that of 1803 was ratified, by which we acquired the country from the French Government; but formal proceedings were taken immediately thereafter by which, at New Orleans, possession was delivered to the French official, M. Laussat, on the 30th day of November, 1803; and on the 20th day of December following this, possession was formally passed over to Gen. Wilkinson, representing the United States. Corresponding changes of flags were made at the time at New Orleans, and similar transfers were effected at Saint Louis on the 9th and 10th of March, 1804. [56

The acquisition of titles by individuals to lands from the Government, both under the French and Spanish *régimes*, was of the simplest character. An application to the Governor, who usually resided at New Orleans, or to a Lieutenant-Governor, for leave to cultivate some of the land under his authority, was rarely refused; and when such an application was rejected, it was generally upon the ground that some previous applicant had a better right. Some of these grants were surveyed and marked out, and the license and survey were considered, when accompanied by possession, to complete the title. Many individuals, however, were in possession of lands under titles which were not perfect; and when the country came into the control of the United States it became the purpose and obvious duty of the Government to secure to these people all the rights, however imperfect or inchoate, which had been acquired by them under the dominion of either France or Spain. Most of the inhabitants of this territory were French.

The Government of the United States performed this duty in the most liberal manner. It commenced by passing an Act of Congress in 1805 (2 Stat. at L. 324), and a supplement thereto in 1806 (2 U. S. Stat. at L. 391), which was amended in 1807 (2 Stat. at L. 440), by which three commissioners were appointed for the purpose of establishing these land claims and separating them from the public domain. This commission, called the Old Board to distinguish it from another which succeeded it, made a report of its proceedings to Congress in the year 1811. It rejected a very large proportion of the claims submitted to it, and the hard rules which were applied to the cases brought before it for adjudication occasioned much discontent. A history of the effort to induce Congress to some more liberal provision in regard to them shows that that body was very [56 fully informed as to the proceedings taken by the commission; and it was upon the representation of at least one of the commissioners, as well as statements of some other persons who were interested in and cognizant of the state of affairs, and upon petitions presented to it, which may be found among the American State Papers, that Congress was induced to pass a much more liberal statute in regard to these claims. It was approved June 13, 1812 (2 Stat. at L. 748), and provided for the appointment of another board of commissioners with authority to re-examine the claims which had been rejected, as well as to investigate others not previously presented, and directed a report to be made to Congress. The first and second sections of this statute, which is supposed to be controlling in regard to the case now before us, read as follows:

"An Act Making Further Provision for Settling the Claims to Land in the Territory of Missouri.

"Sec. 1. *Be it enacted, By the Senate and House of Representatives of the United States of America in Congress assembled,* That the rights, titles and claims to town or village lots, out lots, common field lots, and commons, in, adjoining, and belonging to the several Towns or Villages of Portage des Sioux, St. Charles, St. Louis, St. Ferdinand, Villago a Robert, Carondelet, St. Genevieve, New Madrid, New Bourbon, Little Prairie and Arkansas, in the Territory of Missouri, which lots have been inhabited, cultivated, or possessed, prior to the twentieth day of December, one thousand eight hundred and three, shall be and the same are hereby confirmed to the inhabitants of the respective towns or villages aforesaid, according to their several right or rights in common thereto; *Provided,* That nothing herein contained shall be construed to affect the rights of any persons claiming the same lands, or any part thereof, whose claims have been confirmed by the board of commissioners for adjusting and settling claims to land in the said Territory. And it shall be the duty of the principal deputy surveyor for the said Territory, as soon as may be, to survey, or cause to be surveyed and marked [564] (where the same has not already been done, according to law), the out-boundary lines of the said several towns or villages, so as to include the out lots, common field lots and commons thereto respectively belonging. And he shall make out plats of the surveys, which he shall transmit to the surveyor-general, who shall forward copies of the said plats to the Commissioner of the General Land Office, and to the recorder of land titles; the expense of surveying the said out-boundary lines shall be paid by the United States out of any moneys appropriated for surveying the public lands; *Provided,* That the whole expense shall not exceed three dollars for every mile that shall be actually surveyed and marked.

"Sec. 2. *And be it further enacted,* That all town or village lots, out lots, or common field lots, included in such surveys, which are not rightfully owned or claimed by any private individuals, or held as commons belonging to such towns or villages, or that the President of the United States may not think proper to reserve for military purposes, shall be, and the same are, hereby reserved for the support of schools in the respective towns or villages aforesaid; *Provided,* That the whole quantity of land contained in the lots reserved for the support of schools in any one town or village, shall not exceed one twentieth part of the whole lands included in the general survey of such town or village."

There are numerous Acts of Congress, confirming titles reported upon favorably by this commission, to be found in the years subsequent to its appointment, as well as many statutes displaying the utmost liberality in extending the time within which parties might apply to this commission, or to an officer who as recorder succeeded to it, so that the patience and generosity with which Congress endeavored to have these claims originating in those early days established, where there was any basis of right whatever, is conspicuous. Congress also dealt with the State of Missouri, in regard to contributions for the erection of public buildings and for the promotion of education, in the same liberal manner as it did in regard to other regions which were admitted as new States, that [565] had previously been governed for a while as Territories under its enactments.

By the Act of March 3, 1811, Congress extended the system of the surveys of the public lands over this region, and in the tenth section, providing for sales of such public lands as should have been surveyed, declared that "All such lands shall, with the exception of the section 'number sixteen,' which shall be reserved in each township for the support of schools within the same, with the exception also of a tract reserved for the support of a seminary of learning, as provided for by the seventh section of this Act, and with the exception also of the salt springs and lead mines, and lands contiguous thereto, which by the direction of the President of the United States may be reserved for the future disposal of the said States, shall be offered for sale to the highest bidder," etc. 2 Stat. at L. 665.

When the time came for the admission of Missouri into the Union, among the propositions which Congress submitted to the people of the Territory upon which it might be admitted as a State, the first was "That section numbered sixteen in every township, and when such section has been sold, or otherwise disposed of, other lands equivalent thereto, and as contiguous as may be, shall be granted to the State for the use of the inhabitants of such township, for the use of schools." 3 Stat. at L. 547.

The acceptance by the State of this proposition, as one of the conditions under which it entered the Union, forms the basis of the title claimed by the plaintiff in this suit. By the general system of surveys of public lands which had been established prior to the Act of 1811, all the public lands of the United States, and all those within the general boundary, as fast as they were surveyed at all, were divided first into townships of six miles square, each of which was then subdivided into sections of 640 acres. These townships and sections were controlled by meridians of latitute and longitude, and not by natural objects; and although the lines, if actually protracted upon the ground, might extend over places of considerable population, and include lands owned by private citizens, yet as it was necessary to the [566] completion of the general system of congressional surveys they were made to cover the whole country, and to include the entire Territory. As regards the sixteenth section: of course when these surveys were protracted, either by a simple calculation or by actual survey over lands which were claimed or owned by private persons, or which had been reserved for public purposes, they had no effect to defeat or establish such titles, but all that came within the lines of such sixteenth section which was not otherwise appropriated became the property of the State for school purposes.

The conflict in this case grows out of the assertion by the plaintiff that the land in controversy passed to the State by virtue of the Act of 1820, as part of a sixteenth section, while the defendants claim that the title and right to it passed out of the Government of the United States by the Act of 1812, eight years prior to

the admission of the State into the Union, and the Act granting each sixteenth section to the State. It is not denied that the lines of the sixteenth section of township forty-five north, range seven east of the principal meridian, include the land in dispute, nor, if there was no reason to the contrary, that it passed to the State of Missouri under the provisions of the Act admitting it into the Union. Neither is there any dispute that the plaintiff in error in this case, who was also plaintiff below, is invested as commissioner, for the purposes of this suit, with the right of the State of Missouri to the possession.

The defendants say, on the other hand, that they and their predecessors from whom they derive title became the owners of this land by operation of the Act of 1812, and that the United States, having by that Act parted with its title, had nothing to give to the State of Missouri by the Act of 1820, and did not intend to give to that State that which had been granted and confirmed already to private parties.

These two propositions present, sharply, the issue to be tried in the present case.

It will be seen at once that there is really no contest about the claim of the plaintiff, unless the defendants have established some break in the continuity of the title which the United States may have received from France by the Treaty of 1803, or unless the exceptions in that treaty of private property take the land in controversy out of that class where the right of ownership was vested in the United States by the treaty. We must turn then to the defense in this case to ascertain whether the decision of the Supreme Court of Missouri is sound which held that defense to be a good one.

There is no question here as to the jurisdiction of this court, although the case comes from the supreme court of a State; for every matter in dispute arises either under the Treaty of 1803, the Acts of Congress in regard to these lands, or the authority of some officer of the Government of the United States exercised over them.

The Act of June 13, 1812, was passed, as we have stated, for the purpose of prescribing more liberal principles by which the claims of private persons to portions of what otherwise would have been public land should be ascertained and established, and its provisions must be construed in that spirit. The inhabitants of French villages had a system of dividing and distributing the ownership of lands in and about them not common to people of English origin. Collecting themselves together for residence in that part of the settlement which may be called the village proper, they selected small parcels of land for cultivation, which [572] were generally long strips with narrow fronts. These, measured by the French arpent, were usually two or three arpents wide by forty in length, running backward in the shape of a parallelogram. The dividing lines between these adjoining tracts, which were held by different owners, were sometimes well marked, but in other cases not so distinctly indicated. The ground in which these small pieces of land were thus held by their various individual owners was known as the "town or village lots, out lots, common field lots and commons," belonging to the particular village. A large number of the villages in the northern part of Louisiana, which afterwards came to be called the Territory of Missouri, had these outlying appendages to the village proper, which were always treated as a part of it. The Act of 1812 very carefully gives the names of the villages so situated, reciting the names of "Portage des Sioux, St. Charles, St. Louis, St. Ferdinand, Villago a Robert, Carondelet, St. Genevieve, New Madrid, New Bourbon, Little Prairie and Arkansas, in the Territory of Missouri," as those to which the Act applied. It also declares that "the rights, titles and claims" intended to be covered by that statute are those to the "town or village lots, out lots, common field lots, and commons in, adjoining, and belonging to the several towns or villages" thus designated.

It will thus be seen with what care the statute enumerated the villages to which it was intended to apply and the kind of claims to tracts of land therein proposed to be covered by it.

The Act then proceeds to confine its operation to those lots which "have been inhabited, cultivated or possessed, prior to the twentieth day of December, 1803," that being the date on which, as already stated, the government and possession of the territory in which these settlements are located were actually transferred from France to the United States. It may also be noted that the language of the statute does not refer to lots then inhabited, cultivated or possessed, that is, on December 20, 1803, but to such as had been so inhabited, cultivated or possessed prior to that date. There is nothing in the Act which implies that the title conferred by it was dependent on actual possession at the [573] very date when the above transfer was made; but on the contrary if there had been habitancy, cultivation or possession prior to that time the Act operated upon the property.

It will also be observed that these qualifications of what is to be confirmed require no description of the person of the owner, nor any evidence that any particular individual shall be proved to have inhabited, cultivated, or possessed any lot prior to December 20, 1803, nor any derivation of title from such a party, but simply that the land shall have been inhabited, cultivated or possessed prior thereto. The Act then proceeds to declare that "the same," evidently referring back to the "rights, titles and claims," mentioned at the beginning of the section, to such lots as these, which "have been inhabited, cultivated or possessed, prior to the 20th day of December, 1803, shall be, and the same are, hereby confirmed to the inhabitants of the respective towns or villages aforesaid, according to their several right or rights in common thereto."

The same section also made it the duty of the principal deputy surveyor to run and mark "the out boundary lines of the said several towns or villages so as to include the out lots, common field lots and commons thereto respectively belonging."

Testimony was offered in the trial court, which is found in the transcript of the record in this case, tending to show that the land now in controversy had been confirmed to four different individuals, Laroche, Bouis, Baccanne and Bizet, respectively, by the board of commissioners established by the Act of 1812; and

On the 29th day of May, 1877, the Legislature amended the last named Act, extending the time to July 1, 1880.

The repealing Act and the other two Acts referred to must be construed together. It then becomes apparent that the power of Franklin County to issue the bonds existed at the date of the execution and delivery of the bonds.

Fairfield v. *Gallatin Co.* 100 U. S. 47 (25: 544); *Moultrie Co.* v. *Rockingham Sav. Bank*, 92 U. S. 631 (23: 631); *Pana* v. *Bowler*, 107 U. S. 529 (27:424); *Am. L. Ins. Co.* v. *Bruce*, 105 U. S. 328 (26: 1121); *Oregon* v. *Jennings*, 119 U. S. 74 (30: 323).

The Constitution of Illinois of 1870 continued the power to issue bonds in compliance with the vote of the legal voters of a county taken prior to the adoption of that Constitution, on the second day of July, 1870.

The county is estopped by the recitals in the bonds to deny its liability thereon.

Richeson v. *People*, 115 Ill. 450; *Middleport* v. *Ætna L. Ins. Co.* 82 Ill. 562.

Even if these bonds were in fact issued in violation of some of the terms and conditions upon which they were voted and subscribed, they are not void under section 7 of the Act of the General Assembly of Illinois, entitled, "An Act to Fund and Provide for Paying the Railroad Debts of Counties, Townships, Cities, and Towns," which took effect April 16, 1869.

Rev. Stat. Ill. of 1874, 791-795; *Town of Eagle* v. *Kohn*, 84 Ill. 292; *Knox Co.* v. *Aspinwall*, 62 U. S. 21 How. 539 (16: 208).

The county had the right to make a contract for extension of time.

Randolph Co. v. *Post*, 93 U. S. 502 (23: 957).

If the County of Franklin had the power to issue these bonds, then, even if grave irregularities attended the exercise of such power, the county may be estopped by the payment of interest and by other facts indicating acquiescence and ratification.

Marshall Co. v. *Schenck*, 72 U. S. 5 Wall. 772 (18: 556); *Randoph Co.* v. *Post*, 93 U. S. 502 (23: 957).

Mr. **Thos. J. Layman**, for appellee:

The bonds having been issued since the present Constitution of Illinois was adopted, the burden is on the appellant to show that they are within the saving clause of the section of said Constitution forbidding municipal subscriptions to the capital stock of railroads, and they are *prima facie* invalid.

Jackson County v. *Brush*, 77 Ill. 59; *Wright* v. *Bishop*, 88 Ill. 302; *Middleport* v. *Ætna L. Ins. Co.* 82 Ill. 563; *People* v. *Jackson Co.* 92 Ill. 451-2; *People* v. *Waynesville*, 88 Ill. 469; *McClure* v. *Oxford Twp.* 94 U. S. 429 (24: 129); *Prairie* v. *Lloyd*, 97 Ill. 179; *Buchanan* v. *Litchfield*, 102 U. S. 278 (26: 188); *Williams* v. *Roberts*, 88 Ill. 20.

Said bonds, having been issued in violation of the terms and conditions on which they were voted and subscribed, are void under section 7 of the Act of the General Assembly of Illinois of April 16, 1869.

The county is not estopped from denying its authority to issue said bonds.

Chisholm v. *Montgomery*, 2 Woods, 594-5; *The Floyd Acceptances*, 74 U. S. 7 Wall. 666 (19: 169); *Miller* v. *Goodwin*, 70 Ill. 659; *Elmwood* v. *Marcy*, 92 U. S. 289 (23: 710); *Marsh* v. *Fulton Co.* 77 U. S. 10 Wall. 676 (19: 1040); *Taylor* v. *Wayne Dist. Twp.* 25 Iowa, 447; Herman, Estoppel, § 224.

Said Act of November 6, 1849, under which the bonds in the case at bar were issued, was repealed by Act of March 31, 1874.

Said repealing Act withdrew from the county all power to issue said bonds, and said bonds are void.

Van Inwagen v. *Chicago*, 61 Ill. 31; *Ill. & Mich. Canal* v. *Chicago*, 14 Ill. 334; *Richardson* v. *Akin*, 87 Ill. 138; *Middleport* v. *Ætna L. Ins. Co.* 82 Ill. 568; *Newkirk* v. *Chapron*, 17 Ill. 344; *Aspinwall* v. *Daviess Co.* 63 U. S. 22 How. 364 (16: 296); *Concord* v. *Portsmouth Sav. Bank*, 92 U. S. 625 (23: 628); Dwar. Stat. 676; *Kay* v. *Goodwin*, 6 Bing. 581; *State* v. *Saline Co. Ct.* 45 Mo. 242; *McQuilkin* v. *Doe*, 8 Blackf. 581; Dill. Mun. Bonds, 40, 41, 50; 1 Dill. Mun. Corp. 513, § 419.

Mr. Justice **Blatchford** delivered the opinion of the court: [527]

This is a suit in equity, commenced on the 4th of August, 1880, by a bill in equity filed in the Franklin County Circuit Court, of the State of Illinois, by the County of Franklin, as plaintiff, against the Belleville and Eldorado Railroad Company, the County Clerk of Franklin County, the Sheriff and Collector of that County, the Auditor of Public Accounts of the State of Illinois, the Treasurer of that State, four individuals alleged to be holders of bonds issued by the County, and the unknown holders of others of such bonds.

The bill was founded upon the alleged invalidity of the bonds. It sought an injunction to restrain the auditor of the State and the clerk of the county from taking measures to collect taxes to pay the interest on the bonds, and to restrain the railroad company and the holders of the bonds from bringing suit against the county on any of the coupons, and to restrain the state treasurer from paying the coupons, and to restrain the sheriff and collector of the county from collecting any more taxes to pay the interest on the bonds, and from paying to the state treasurer any money already collected to pay interest on them; and prayed for a decree declaring an election held in the county on the 11th of September, 1869, on the question of a subscription by the county to the capital stock of the railroad company, to have [528] been void, and a subscription made by the county court of the county, on the 6th of November, 1869, to the capital stock of the company, and all amendments, modifications, and alterations of such subscription, to have been void, and a so-called subscription of $150,000 to the capital stock of the railroad company, made on the 13th of December, 1876, and an attempt made on the 12th of November, 1877, to amend such subscription and to contract for the building of the railroad, to have been void, and the bonds and coupons to be void, and for a decree requiring the holders of them to surrender them for destruction, and for a perpetual injunction to the above effect, and for general relief.

On the 27th of October, 1880, on due proof of personal service of process on the railroad company, the county clerk of the county, the

sheriff and collector of the county, the auditor of public accounts of the State, and the state treasurer, and on proof of due publication as to the defendants named in the bill as holders of the bonds, and as to the unknown holders of them, and there having been no appearance for any defendant, the cause was heard on the bill taken as confessed, and a decree made adjudging the invalidity of the bonds and granting the relief asked for in the bill.

On the 27th of October, 1881, the German Savings Bank of Davenport, Iowa, as the owner of nine of the bonds of the county, of $1,000 each (and of eighteen others of the bonds, of $1,000 each, not involved in the present appeal), was, on a motion made to the state court permitted to defend the suit and to answer the bill. It filed its answer in that court, setting up that it had purchased the bonds in good faith, for a valuable consideration, and without notice of any defense or objection to the validity of any of them, before they were due, and before any default had been made in the payment of any interest on any of them, and before the suit was brought; and that the bonds were valid. At the same time, it filed a petition and a bond for the removal of the cause into the Circuit Court of the United States for the Southern District of Illinois. A copy of the record from the state [529] court was filed in the circuit court on the 21st of December, 1881, and the cause afterwards proceeded therein.

A replication was filed to the answer of the Savings Bank, various holders of the bonds were made defendants and answered, and some of them filed cross bills; proofs were taken, and it was stipulated between the parties that each defendant was, at the commencement of the suit, a *bona fide* holder of the bonds specified in the respective answers, and that they purchased the same for value, without any notice of defense.

The nine bonds held by the Savings Bank, involved in the present appeal, are all alike except as to the number; and each one has upon it a certificate of the auditor of public accounts of the State of Illinois, the bond and the certificate being in the form following:

"UNITED STATES OF AMERICA, STATE OF ILLINOIS:

"No. 15. $1,000.

"Franklin County, eight per cent railroad bond.

"*Know all men by these presents*, That the County of Franklin, in the State of Illinois, acknowledges itself to be indebted to the Belleville and Eldorado Railroad Company, or bearer, in the sum of one thousand dollars, which sum the said county, for value received, promises to pay said company, or bearer, in the City and State of New York, twenty years after date (payable at any time after five years, and before this bond becomes due, at the option of said County of Franklin), with interest thereon from and after the fifteenth day of November, A. D. 1877, at the rate of eight per cent per annum, payable semi-annually on the first days of January and July of each year, on the presentation and surrender, at the place in the said City of New York where the treasurer of the State of Illinois pays the interest and debt of said State, and the coupons hereto attached, as they severally become due.

"This bond is one of a series of fifty of like tenor, for the sum of one thousand dollars each, numbered from one to fifty, inclusive, issued under the provisions of an Act of the General Assembly of the State of Illinois entitled 'An Act to Authorize Cities and Counties to Subscribe Stock to Railroads,' approved November [530 6th, A. D. 1849, and authorized by a majority of the qualified voters of said County of Franklin at an election held in said county on the 11th day of September, A. D. 1869, in accordance with the provisions of said Act.

"In testimony whereof, the said County of Franklin has executed this bond, by the chairman of the board of supervisors, under the order of the board of supervisors of said county, signing his name hereto, and by the clerk of said board, under the order thereof, attesting the same and affixing hereto the seal of said county. This done at the office of the clerk of said board, this thirteenth day of November, A. D. 1877.

"JOHN J. ST. CLAIR,
"*Chairman of the Board of Supervisors of Franklin Co., Illinois.*"

"[SEAL.] "EVAN FITZGERRELL,
"*Clerk of Board of Supervisors of Franklin Co., Illinois.*"

"AUDITOR'S OFFICE, ILLINOIS,
"SPRINGFIELD, *October 24th*, 1879.

"I, Thomas B. Needles, auditor of public accounts of the State of Illinois, do hereby certify, that the within bond has been registered in this office this day pursuant to the provisions of an Act entitled 'An Act to Fund and Provide for Paying the Railroad Debts of Counties, Townships, Cities, and Towns,' in force April 16th, 1869.

"In testimony whereof, I hereunto subscribe my name and affix the seal of my office, at Springfield, the day and year first above written.

"[SEAL.] Signed) "T. B. NEEDLES,
"*Auditor Public Accounts.*"

The nine bonds involved in this appeal were purchased by the Savings Bank, at Davenport, Iowa, four of them for 99 per cent and accrued interest, on the 13th of April, 1880, and five of them at the same price, on the 15th of May, 1880. None of them, and none of the coupons on them at the time of purchase, were overdue; and the first installment of interest which fell due on them after they were purchased by the Savings Bank was duly paid by the county.

A copy taken from the records in the office [531 of the clerk of the county, and all the proceedings of the county court and of the board of supervisors of the county, relative to the election and to the subscription by the county to the stock of the railroad company, was put in evidence.

On final hearing, the Circuit Court made a decree, on July 3, 1883, adjudging that the nine bonds in question were issued without authority of law, and were void, and awarding a pertual injunction in regard to them, as prayed in the bill. From that decree the Savings Bank has appealed.

The record shows the following facts: on the 24th of July, 1869, the County Court of Frank-

lin County, purporting to do so under the authority of an Act of the General Assembly of Illinois, entitled "An Act to Incorporate the Belleville and Eldorado Railroad Company," approved February 22, 1861, and an Act of the General Assembly, approved November 6, 1849, authorizing counties to take stock in railroad companies, made an order submitting to the voters of the county, to be voted upon on the 11th of September, 1869, a proposition to subscribe $200,000 to the capital stock of that company, payable in county bonds at par, due in twenty years from date, with interest payable semi-annually at the rate of 8 per cent per annum, and to be of denominations of not less than $1,000 each, the bonds to be issued upon certain specified conditions and not until they were complied with; one of the conditions being, "that said railroad shall be commenced in the County of Franklin within nine months from the date of said election, and completed through the county by the first day of June, 1872."

On the 6th of November, 1869, the county court made an order, reciting that the election had been held on the 11th of September, 1869, in pursuance of the order of July 24, 1869; that at such election, the qualified voters of the county did, by a majority of their votes (taking as a standard the number of votes cast for county officers at the last general election previous to such vote had upon the question of subscription), authorize the county court of the county to subscribe the sum of $200,000 to the [532] capital stock of the railroad company; and declaring that, by authority of such vote and the Acts of February 22, 1861, and November 6, 1849, the County of Franklin "does hereby subscribe" to the capital stock of the company $100,000 by virtue of the Act of February 22, 1861, and the further sum of $100,000 by virtue of the Act of November 6, 1849, the stock to be payable in the bonds of the county, to be due in 20 years after the date thereof, and to draw interest, payable semi-annually, at the rate of 8 per cent per annum, and to be of the denomination of not less than $1,000 each. The order proceeded: "It is further ordered and considered by the court, that said bonds are to be issued upon the following conditions, and never until they are complied with—that is to say." One of the conditions specified was, "that said railroad shall be commenced in the County of Franklin within nine months from the date of said election, and completed through the county by the first day of June, A. D. 1872." There was nothing in that order of November 6, 1869, which authorized or directed any person to make any subscription to stock on behalf of the county on the books of the railroad company, nor is there any evidence in the record showing that that company ever assented to or accepted any subscription under that order.

On the 6th of February, 1871, the county court made an order reciting the fact of the subscription directed to be made by the order of November 6, 1869, and that it required that the railroad should be commenced in the County of Franklin within nine months from the date of the election authorizing the subscription to be made, namely, by the 11th of June, 1870, and be completed through the county by the first of June, 1872, and that the time for commencing the building of the road had expired; and it therefore ordered, that the time for commencing and completing the road be extended, and that the subscription be made on the stock books of the railroad company "upon the following terms and conditions, and not until they are fully complied with," namely: the $200,000 to be payable in the bonds of the county at par, to be due in twenty years from the date thereof, and to draw interest, payable semi-annually, at the rate of 8 per cent per annum, and to be of the denomination of [533] not less than $1,000 each; that the railroad should be commenced in the County of Franklin on or before January 1, 1872, and be completed through the county by the first of January, 1874; with other conditions. This order of February 6, 1871, was the first order of the county court which authorized a subscription to stock to be made on the books of the railroad company; but the record contains no evidence that the subscription so authorized by that order was ever made on the books of the company, or that the company assented to or accepted such subscription.

On the 9th of March, 1871, the county court made an order reciting the fact of the election of the 11th of September, 1869, and that a majority of the legal voters of the county voted for the subscription of $200,000 to the stock of the company; and it then stated that the county did, by such order of the 9th of March, 1871, subscribe the sum of $200,000 for 2,000 shares of the capital stock of the company, the stock to be subscribed and the bonds to be issued "upon the following conditions, and not until they are fully complied with," the stock to be paid for in Franklin County bonds at par, payable in twenty years after date, with interest at 8 per cent per annum, payable semi-annually in New York, and to be of the denomination of $1,000 each, with interest coupons attached. It then specified when the bonds were to be delivered, and one of the conditions prescribed was "the said railroad to be commenced within the county in one year and completed through the county within three years from the date of this subscription."

On the 13th of December, 1876, the board of supervisors of the county, which had taken the place of the county court in respect to the matter in question, made an order which recited the fact of the election of September 11, 1869, and the result and terms of the vote, and then proceeded to state that the board, by authority of the vote and of the Acts of February 22, 1861, and November 6, 1849, did thereby subscribe to the capital stock of the company $150,000, being $75,000 by virtue of each of the two Acts, payable in bonds of the county at par, the bonds to be due in twenty years and to be payable at the expiration of five years from their date, at the option of the [534] county, and to draw interest at the rate of 8 per cent per annum, payable semi-annually, and to be of the denomination of not less than $1,000 each, the bonds to be issued and placed in the hands of a trustee, to be paid out on certain specified conditions, one of which was that the railroad should be commenced within 30 days from the date of the order and be completed by the 15th of October, 1877.

There is nothing in the record to show that,

down to the 13th of December, 1876, any subscription to stock had been made on behalf of the county on the books of the railroad company, or that the company had accepted or assented to any subscription by the county. Nor is there anything in the record which shows that any subscription was made on the books of the company before the 6th of March, 1877, and it appears that the subscription made on the books of the company was for $150,000 of stock.

On the 13th of September, 1877, the board of supervisors extended the time for the building of the road until the 15th of March, 1878.

On the 12th of November, 1877, the board of supervisors made an order amending the order of December 13, 1876, subscribing $150,000 to the stock of the company, so as to read that the county, under the Act of February 22, 1861, and in accordance with the vote of September 11, 1869, subscribed $100,000 to the stock, payable in bonds of the county at par, the bonds to be due twenty years after their date and payable, at the option of the county, after five years, and to bear interest at the rate of 8 per cent per annum, payable semi-annually, and to be of the denomination of $1,000 each, and that the county, under the Act of November 6, 1849, and under such vote, subscribed $50,000 to the stock of the company, payable in bonds of the like tenor. The order directed the chairman of the board and its clerk to execute 100 bonds of $1,000 each, and of the above tenor, for the subscription under the Act of February 22, 1861, and fifty bonds of $1,000 each, of the above tenor, for the subscription under the Act of November 6, 1849; the bonds to be placed in the hands of a trustee and to be delivered to the railroad company "only on the same conditions and under [535] the same restrictions as specified in the order" of the board of December 13, 1876.

The bonds were issued, bearing date November 13, 1877. The board of supervisors subsequently extended the time for the completion of the road to the 15th of September, 1878, and again to the first of November, 1879. The evidence shows that no part of the road was completed within Franklin County prior to January, 1877, and that it was not completed through Franklin County until about the first of November, 1879.

We are of opinion that the decree of the circuit court must be affirmed. At the time the vote of September 11, 1869, was had, the Act of the General Assembly of Illinois, which became a law on the 16th of April, 1869, entitled "An Act to Fund and Provide for Paying the Railroad Debts of Counties, Townships, Cities and Towns" (Laws of Illinois of 1869, p. 316), was in force. Section 2 of that Act provided that bonds to be issued in payment of a debt created by a county, to aid in the construction of a railroad, should, in order to receive the benefits of that Act, be registered by the holder thereof at the office of the auditor of public accounts, who should cause the same to be registered in a book kept for that purpose. The same section provided that the registration should show the date, amount, number, maturity and rate of interest of each bond, and under what Act and by what county issued, and that the auditor should, under his seal of office, certify upon each bond the fact of such registration. Section 7 of the same Act was in these words: "And it shall not be lawful to register any bonds under the provisions of this Act, or to receive any of the benefits or advantages to be derived from this Act, until after the railroad, in aid of the construction of which the debt was incurred, shall have been completed near to or in such county, township, city or town, and cars shall have run thereon; and none of the benefits, advantages or provisions of this Act shall apply to any debt unless the subscription or donation creating such debt was first submitted to an election of the legal voters of said county, township, city or town, under the provisions of the laws of this State, and a majority of the legal voters living in said [536] county, township, city or town were in favor of such aid, subscription or donation; and any county, township, city or town shall have the right, upon making any subscription or donation to any railroad company, to prescribe the conditions upon which such bonds, subscriptions or donations shall be made, and such bonds, subscriptions or donations shall not be valid and binding until such conditions precedent shall have been complied with. And the presiding judge of the county court, or the supervisor of the township, or the chief executive officer of the city or town that shall have issued bonds to any railway or railways, immediately upon the completion of the same near to, into or through such county, township, city or town, as may have been agreed upon, and the running of the cars thereon, shall certify under oath that all the preliminary conditions in this Act required to be done to authorize the registration of such bonds and to entitle them to the benefits of this Act have been complied with, and shall transmit the same to the state auditor, with a statement of the date, amount, number, maturity and rate of interest of such bonds, and to what company and under what law issued; and thereupon the said bonds shall be subject to registration by the state auditor, as is hereinbefore provided."

The Constitution of Illinois, which took effect July 2, 1870, provides as follows: "No county, city, town, township or other municipality shall ever become subscriber to the capital stock of any railroad or private corporation, or make donation to or loan its credit in aid of such corporation; *Provided, however*, That the adoption of this article shall not be construed as affecting the right of any such municipality to make such subscriptions where the same have been authorized, under existing laws, by a vote of the people of such municipalities prior to such adoption."

In the present case, the only vote of the people of the County of Franklin had prior to July 2, 1870, authorizing a subscription to the capital stock of the railroad company, was the vote of September 11, 1869. By section 7 of the Act of April 16, 1869, then in force, the County had the right, in voting for the sub- [537] scription, to prescribe the conditions upon which the subscription should be made; and that section declared that such subscription should not be valid and binding until such conditions precedent should have been complied with. Under such circumstances any condi-

tion imposed by the vote, as a condition precedent to the issuing of the bonds in payment of the subscription, was a part of the vote, and a part of the authority for the subscription, within the meaning of the proviso to the article of the Constitution above cited. So, also, any condition prescribed by the vote as a condition precedent upon which the bonds should be issued, must have been complied with, in order to make the bonds valid and binding. In the present case, the vote of September 11, 1869, as a vote in favor of the subscription of $200,000 to the stock, payable in the bonds described in the order of the county court of July 24, 1869, was a vote in favor of such subscription, payable in the bonds, "said bonds to be issued" (in the language of the order of July 24, 1869, directing the election to be held) "upon the following conditions, and not until they are complied with." One of those conditions was that the railroad "should be commenced in the County of Franklin within nine months from the date of such election, and completed through the county by the first day of June, 1872." The bonds in question were not issued until November, 1877, and the road was not completed through the county until about the first of November, 1879. No change was made in the conditions prescribed by the vote, prior to the second of July, 1870, and there was no power, after that, to make any material change in those terms and conditions.

The evident purpose of the provision of section 7 of the Act of April 16, 1869, was to prevent the issue of bonds in payment of subscriptions to railroad companies until the conditions imposed by the vote, as conditions precedent, had been complied with, and to declare that the bonds, if issued in violation of such conditions precedent, should not be valid and binding. When the Savings Bank, in April and May, 1880, purchased the bonds in question, it was, notwithstanding the recitals on the face of them, chargeable with notice of the provision of section 7 of the Act of April 16, 1869, which had been in force for nearly five months before the date named on the face of the bonds as the date of the election, and for more than eight years before the date named on the face of the bonds as the date of their issue. It was also required to take notice of the construction given to such statutory provision by the Supreme Court of Illinois, at its September Term, 1876, prior to the issue of these bonds, in the case of *Town of Eagle* v. *Kohn*, 84 Ill. 292.

That was a suit against the Town of Eagle, brought by innocent holders for value, to recover on coupons cut from bonds issued by the town to a railroad company, December 1, 1870, in payment of a subscription to stock, in pursuance of a vote of the people of the town, had November 2, 1869. In that vote, certain conditions as to time had been prescribed, upon which the bonds should be issued. Those conditions had not been complied with. The question arose in the case, whether the declaration of the statute that the bonds should not be valid and binding until such conditions precedent had been complied with, was to be confined in its operation, to the railroad company to which the bonds should have been issued, or whether it extended to innocent holders for value. The court held that although the statute did not declare that the bonds should be void, its declaration that they should not be valid and binding until the conditions precedent should have been complied with, was an imperative and peremptory declaration that the bonds should not be valid and binding until the conditions named should have been complied with, even in the hands of innocent holders without notice; and it declared the bonds to be invalid in the hands of the plaintiffs.

This interpretation of section 7 of the Act of April 16, 1869, accompanied all bonds subsequently issued, into the hands of whoever took them, whether a *bona fide* holder or not. This court must recognize this decision of the Supreme Court of Illinois as an authoritative construction of the statute, made before the bonds were issued, and to be followed by this court. *Douglass* v. *Pike Co.* 101 U. S. 677 [25:968]; *Burgess* v. *Seligman*, 107 U. S. 20 [27:359]; *Green Co.* v. *Conness*, 109 U. S. 104 [27:872]; *Anderson* v. *Santa Anna*, 116 U. S. 356 [29:633]. In the first of these cases it was said: "After a statute has been settled by judicial construction, the construction becomes, so far as contract rights acquired under it are concerned, as much a part of the statute as the text itself."

The ruling in *Town of Eagle* v. *Kohn* was followed by the Supreme Court of Illinois in *Richeson* v. *People* [3 West. Rep. 55], 115 Ill. 450, in January, 1886, and was applied by that court to the bonds issued November 13, 1877, by the County of Franklin to the same railroad company, under the Act of February 22, 1861, purporting to have been issued in pursuance of the same vote of September 11, 1869, as in the present case. The court referring to its decision in *Town of Eagle* v. *Kohn*, made at September Term, 1876, said (p. 460): "We there held that bonds in the hands of innocent purchasers were not valid, where the conditions upon which the subscription was made have not been complied with. The language of the statute is plain and explicit, and unless it should be arbitrarily disregarded, we perceive no ground upon which an innocent holder can evade its provisions." This view was held, as the court said, because, when the vote was taken, the 7th section of the Act of April 16, 1869, was in force. See, also, *Parker* v. *Smith*, 3 Bradw. 356, 366, 367.

In regard to the case of *Town of Eagle* v. *Kohn*, it is urged by the Savings Bank that it does not appear, by the report of that case, that the bonds there in question had been registered by the state auditor, as contemplated by the Act of April 16, 1869; that the provisions of sections 2 and 7 of the Act of April 16, 1869, imply that the state auditor shall ascertain and determine whether or not the evidence is sufficient to authorize him to register the bonds, and to indorse thereon his certificate of registration; that it must be presumed that the presiding judge of the county court, whose duty it was, under section 7, to certify to the auditor that all the preliminary conditions required by the Act to be done, to authorize the bonds to be registered and to entitle them to the benefits of the Act, had been complied with, had performed his duty; that, after such registration and the certificate of the auditor on the bonds had been made, and other persons have ac-

[538] [539] [540]

quired rights in the bonds so registered and certified, upon the faith of the registration and certificate, those rights cannot be affected by subsequently showing that some of the facts entitling the bonds to registration did not exist; that, although bonds issued after the passage of the Act of April 16, 1869, were required to be registered in order to entitle them to the benefits of that Act, a tribunal was provided to determine whether the conditions precedent upon which the bonds were to be issued had been complied with; that the decision of that tribunal, as evidenced by the registration of the bonds, is conclusive; and that the legislative intention must have been that the registration of the bonds should settle definitely the question of compliance with the conditions precedent.

The answer to these suggestions is that the preliminary conditions required by section 7 of the Act of April 16, 1869, to exist, in order to authorize the registration of the bonds, are only that "The railroad in aid of the construction of which the debt was incurred shall have been completed near to or in such county, township, city or town, and cars shall have run thereon;" and that the subscription creating the debt should have been voted for by a majority of the legal voters of the county, township, city or town, living therein. Those preliminary conditions are the only ones which are required to be certified to, by the presiding judge of the county court, in order to authorize the registration of the bonds. It is not required by section 7 that the presiding judge of the county court shall make any certificate as to a compliance with the terms and conditions of any subscription. Section 7 requires, as a preliminary to registration, that the railroad shall have been completed near to or in the county, and that cars shall have run thereon; but it does not require that the road shall have been completed by any time prescribed as a condition precedent in the vote. The registration of the bonds by the state auditor has nothing to do with any of the terms or conditions on which the stock was voted and subscribed. Neither the registration nor the certificate of registry covers or certifies any fact, as to compliance [541] with the conditions prescribed in the vote, on which alone the bonds were to be issued. The recital in the bonds does not contain any reference to the Act of April 16, 1869, or certify any compliance with the provisions of that Act; and the certificate of registry merely certifies that the bond has been registered in the auditor's office pursuant to the provisions of the Act of April 16, 1869. The statute does not require that the auditor shall determine or certify that the bonds have been regularly or legally issued. The case of *Lewis* v. *Barbour County*, 105 U. S. 739 [26: 993], does not aid the Savings Bank. In that case, under an Act of Kansas in regard to registry, the auditor had certified that the bonds had been "regularly and legally" issued. In *Dixon County* v. *Field*, 111 U. S. 83 [28: 360], and in *Crow* v. *Oxford*, 119 U. S. 215 [30: 388], the first case arising in Nebraska, and the second in Kansas, the certificate of the auditor in each case was that the bonds were "regularly and legally" issued; but this court held, in both cases, that the municipality issuing the bonds was not estopped by the registry or the certificate, and that no conclusive effect was given by the Registration Statute to the registration or to the certificate.

The cases of *Insurance Company* v. *Bruce*, 105 U. S. 328 [26: 1121]; *Pana* v. *Bowler*, 107 U. S. 529 [27: 424]; and *Oregon* v. *Jennings*, 119 U. S. 74 [30: 323], are relied upon by the Savings Bank, in this case, to sustain its view that the decree of the circuit court was erroneous.

In the case of *Insurance Company* v. *Bruce*, the bonds were issued by the Town of Bruce, in the State of Illinois, on the first of December, 1870, in payment of a subscription to the capital stock of a railroad company. The bonds recited upon their face that they were issued by virtue of two statutes of the State, one of which was the before named Act of April 16, 1869; and the bonds also certified on their face, that, at a special election held in the township, on the 7th of September, 1869, a majority of the legal voters participating at the same had voted in favor of the subscription and of the issue of the bonds. Certain of the conditions as to time, imposed by the vote of the people, had not been complied with, and the bonds were in the hands of *bona fide* holders for value. In the [542] opinion in that case, the terms of section 7 of the Act of April 16, 1869, and the ruling in the case of *Town of Eagle* v. *Kohn* were considered; and the decision of this court, in favor of the bondholder, was placed upon the ground that the case was distinguishable from that of *Town of Eagle* v. *Kohn*, in that it did not appear from the latter case that the town had, by the recitals in its bonds, estopped itself from asserting, as against a *bona fide* holder, the nonperformance of conditions imposed by the vote of the people; while, in the case then before this court, the Town of Bruce had, by the recitals in its bonds, represented to the public that the bonds were issued in all respects in conformity to law, and that nothing remained to be done which was essential to its liability thereon. The view taken was that as the Town of Bruce had power, under the 7th section of the Act of April 16, 1869, to make an unconditional subscription, and to issue and deliver its bonds in advance of the construction of the road, and as the bonds recited that they were issued by virtue of the Act of April 16, 1869, it was too late for the town, as against *bona fide* purchasers of the bonds, to claim that they had been issued in violation of the special conditions. In the case now before us, as before said, there is no reference, in the bonds, to the Act of April 16, 1869, and no statement in the bonds that they were issued by virtue of that Act. Moreover, in the case of *Insurance Company* v. *Bruce*, the bonds had been issued on December 1, 1870, prior to the decision in *Town of Eagle* v. *Kohn*, which was made at September Term, 1876.

In *Pana* v. *Bowler* the bonds were issued by the Town of Pana, in Illinois, June 23, 1873, prior to the decision in *Town of Eagle* v. *Kohn*. The vote of the people of the township was had on April 30, 1870, while the Act of April 16, 1869, was in force, and the bonds, as in the case of *Insurance Company* v. *Bruce*, recited on their face, not only that they were issued in compliance with the vote, but that they were issued in accordance with the provisions of the Act of

tion imposed by the vote, as a condition precedent to the issuing of the bonds in payment of the subscription, was a part of the vote, and a part of the authority for the subscription, within the meaning of the proviso to the article of the Constitution above cited. So, also, any condition prescribed by the vote as a condition precedent upon which the bonds should be issued, must have been complied with, in order to make the bonds valid and binding. In the present case, the vote of September 11, 1869, as a vote in favor of the subscription of $200,000 to the stock, payable in the bonds described in the order of the county court of July 24, 1869, was a vote in favor of such subscription, payable in the bonds, "said bonds to be issued" (in the language of the order of July 24, 1869, directing the election to be held) "upon the following conditions, and not until they are complied with." One of those conditions was that the railroad "should be commenced in the County of Franklin within nine months from the date of such election, and completed through the county by the first day of June, 1872." The bonds in question were not issued until November, 1877, and the road was not completed through the county until about the first of November, 1879. No change was made in the conditions prescribed by the vote, prior to the second of July, 1870, and there was no power, after that, to make any material change in those terms and conditions.

The evident purpose of the provision of section 7 of the Act of April 16, 1869, was to prevent the issue of bonds in payment of subscriptions to railroad companies until the conditions imposed by the vote, as conditions precedent, had been complied with, and to declare that the bonds, if issued in violation of such conditions precedent, should not be valid and binding. When the Savings Bank, in April and May, 1880, purchased the bonds in question, it was, notwithstanding the recitals on the face of them, chargeable with notice of the provision of section 7 of the Act of April 16, 1869, which had been in force for nearly five months before the date named on the face of the bonds as the date of the election, and for more than eight years before the date named on the face of the bonds as the date of their issue. It was also required to take notice of the construction given to such statutory provision by the Supreme Court of Illinois, at its September Term, 1876, prior to the issue of these bonds, in the case of *Town of Eagle* v. *Kohn*, 84 Ill. 292. [538]

That was a suit against the Town of Eagle, brought by innocent holders for value, to recover on coupons cut from bonds issued by the town to a railroad company, December 1, 1870, in payment of a subscription to stock, in pursuance of a vote of the people of the town, had November 2, 1869. In that vote, certain conditions as to time had been prescribed, upon which the bonds should be issued. Those conditions had not been complied with. The question arose in the case, whether the declaration of the statute that the bonds should not be valid and binding until such conditions precedent had been complied with, was to be confined in its operation, to the railroad company to which the bonds should have been issued, or whether it extended to innocent holders for value. The court held that although the statute did not declare that the bonds should be void, its declaration that they should not be valid and binding until the conditions precedent should have been complied with, was an imperative and peremptory declaration that the bonds should not be valid and binding until the conditions named should have been complied with, even in the hands of innocent holders without notice; and it declared the bonds to be invalid in the hands of the plaintiffs.

This interpretation of section 7 of the Act of April 16, 1869, accompanied all bonds subsequently issued, into the hands of whoever took them, whether a *bona fide* holder or not. This court must recognize this decision of the Supreme Court of Illinois as an authoritative construction of the statute, made before the bonds were issued, and to be followed by this court. *Douglass* v. *Pike Co.* 101 U. S. 677 [25: 968]; *Burgess* v. *Seligman*, 107 U. S. 20 [27:359]; *Green Co.* v. *Conness*, 109 U. S. 104 [27:872]; *Anderson* v. *Santa Anna*, 116 U. S. 356 [29: 633]. In the first of these cases it was said: "After a statute has been settled by judicial construction, the construction becomes, so far as contract rights acquired under it are concerned, as much a part of the statute as the text itself." [539]

The ruling in *Town of Eagle* v. *Kohn* was followed by the Supreme Court of Illinois in *Richeson* v. *People* [3 West. Rep. 55], 115 Ill. 450, in January, 1886, and was applied by that court to the bonds issued November 13, 1877, by the County of Franklin to the same railroad company, under the Act of February 22, 1861, purporting to have been issued in pursuance of the same vote of September 11, 1869, as in the present case. The court referring to its decision in *Town of Eagle* v. *Kohn*, made at September Term, 1876, said (p. 460): "We there held that bonds in the hands of innocent purchasers were not valid, where the conditions upon which the subscription was made have not been complied with. The language of the statute is plain and explicit, and unless it should be arbitrarily disregarded, we perceive no ground upon which an innocent holder can evade its provisions." This view was held, as the court said, because, when the vote was taken, the 7th section of the Act of April 16, 1869, was in force. See, also, *Parker* v. *Smith*, 3 Bradw. 356, 366, 367.

In regard to the case of *Town of Eagle* v. *Kohn*, it is urged by the Savings Bank that it does not appear, by the report of that case, that the bonds there in question had been registered by the state auditor, as contemplated by the Act of April 16, 1869; that the provisions of sections 2 and 7 of the Act of April 16, 1869, imply that the state auditor shall ascertain and determine whether or not the evidence is sufficient to authorize him to register the bonds, and to indorse thereon his certificate of registration; that it must be presumed that the presiding judge of the county court, whose duty it was, under section 7, to certify to the auditor that all the preliminary conditions required by the Act to be done, to authorize the bonds to be registered and to entitle them to the benefits of the Act, had been complied with, had performed his duty; that, after such registration and the certificate of the auditor on the bonds had been made, and other persons have ac- [540]

quired rights in the bonds so registered and certified, upon the faith of the registration and certificate, those rights cannot be affected by subsequently showing that some of the facts entitling the bonds to registration did not exist; that, although bonds issued after the passage of the Act of April 16, 1869, were required to be registered in order to entitle them to the benefits of that Act, a tribunal was provided to determine whether the conditions precedent upon which the bonds were to be issued had been complied with; that the decision of that tribunal, as evidenced by the registration of the bonds, is conclusive; and that the legislative intention must have been that the registration of the bonds should settle definitely the question of compliance with the conditions precedent.

The answer to these suggestions is that the preliminary conditions required by section 7 of the Act of April 16, 1869, to exist, in order to authorize the registration of the bonds, are only that "The railroad in aid of the construction of which the debt was incurred shall have been completed near to or in such county, township, city or town, and cars shall have run thereon;" and that the subscription creating the debt should have been voted for by a majority of the legal voters of the county, township, city or town, living therein. Those preliminary conditions are the only ones which are required to be certified to, by the presiding judge of the county court, in order to authorize the registration of the bonds. It is not required by section 7 that the presiding judge of the county court shall make any certificate as to a compliance with the terms and conditions of any subscription. Section 7 requires, as a preliminary to registration, that the railroad shall have been completed near to or in the county, and that cars shall have run thereon; but it does not require that the road shall have been completed by any time prescribed as a condition precedent in the vote. The registration of the bonds by the state auditor has nothing to do with any of the terms or conditions on which the stock was voted and subscribed. Neither the registration nor the certificate of registry covers or certifies any fact, as to compliance [541] with the conditions prescribed in the vote, on which alone the bonds were to be issued. The recital in the bonds does not contain any reference to the Act of April 16, 1869, or certify any compliance with the provisions of that Act; and the certificate of registry merely certifies that the bond has been registered in the auditor's office pursuant to the provisions of the Act of April 16, 1869. The statute does not require that the auditor shall determine or certify that the bonds have been regularly or legally issued. The case of *Lewis* v. *Barbour County*, 105 U. S. 739 [26: 993], does not aid the Savings Bank. In that case, under an Act of Kansas in regard to registry, the auditor had certified that the bonds had been "regularly and legally" issued. In *Dixon County* v. *Field*, 111 U. S. 83 [28: 360], and in *Crow* v. *Oxford*, 119 U. S. 215 [30: 388], the first case arising in Nebraska, and the second in Kansas, the certificate of the auditor in each case was that the bonds were "regularly and legally" issued; but this court held, in both cases, that the municipality issuing the bonds was not estopped by the registry or the certificate, and that no conclusive effect was given by the Registration Statute to the registration or to the certificate.

The cases of *Insurance Company* v. *Bruce*, 105 U. S. 328 [26: 1121]; *Pana* v. *Bowler*, 107 U. S. 529 [27: 424]; and *Oregon* v. *Jennings*, 119 U. S. 74 [30: 323], are relied upon by the Savings Bank, in this case, to sustain its view that the decree of the circuit court was erroneous.

In the case of *Insurance Company* v. *Bruce*, the bonds were issued by the Town of Bruce, in the State of Illinois, on the first of December, 1870, in payment of a subscription to the capital stock of a railroad company. The bonds recited upon their face that they were issued by virtue of two statutes of the State, one of which was the before named Act of April 16, 1869; and the bonds also certified on their face, that, at a special election held in the township, on the 7th of September, 1869, a majority of the legal voters participating at the same had voted in favor of the subscription and of the issue of the bonds. Certain of the conditions as to time, imposed by the vote of the people, had not been complied with, and the bonds were in the hands of *bona fide* holders for value. In the [542] opinion in that case, the terms of section 7 of the Act of April 16, 1869, and the ruling in the case of *Town of Eagle* v. *Kohn* were considered; and the decision of this court, in favor of the bondholder, was placed upon the ground that the case was distinguishable from that of *Town of Eagle* v. *Kohn*, in that it did not appear from the latter case that the town had, by the recitals in its bonds, estopped itself from asserting, as against a *bona fide* holder, the nonperformance of conditions imposed by the vote of the people; while, in the case then before this court, the Town of Bruce had, by the recitals in its bonds, represented to the public that the bonds were issued in all respects in conformity to law, and that nothing remained to be done which was essential to its liability thereon. The view taken was that as the Town of Bruce had power, under the 7th section of the Act of April 16, 1869, to make an unconditional subscription, and to issue and deliver its bonds in advance of the construction of the road, and as the bonds recited that they were issued by virtue of the Act of April 16, 1869, it was too late for the town, as against *bona fide* purchasers of the bonds, to claim that they had been issued in violation of the special conditions. In the case now before us, as before said, there is no reference, in the bonds, to the Act of April 16, 1869, and no statement in the bonds that they were issued by virtue of that Act. Moreover, in the case of *Insurance Company* v. *Bruce*, the bonds had been issued on December 1, 1870, prior to the decision in *Town of Eagle* v. *Kohn*, which was made at September Term, 1876.

In *Pana* v. *Bowler* the bonds were issued by the Town of Pana, in Illinois, June 23, 1873, prior to the decision in *Town of Eagle* v. *Kohn*. The vote of the people of the township was had on April 30, 1870, while the Act of April 16, 1869, was in force, and the bonds, as in the case of *Insurance Company* v. *Bruce*, recited on their face, not only that they were issued in compliance with the vote, but that they were issued in accordance with the provisions of the Act of

April 16, 1869. No point was raised in that case that, the bonds having been issued after [543] the new Constitution of Illinois came into force, on July 2, 1870, in pursuance of a vote of the people had on April 30, 1870, conditions prescribed by that vote had not been complied with.

In *Oregon* v. *Jennings* the bonds were issued on the 31st of December, 1870, nearly six years before the decision was made in *Town of Eagle* v. *Kohn*, and the election was held in the Town of Oregon, Illinois, on the 23d of June, 1870. Section 7 of the Act of April 16, 1869, appears to have been considered by the court in that case; and it held that the recitals in the bonds estopped the town from taking the defense, as against a *bona fide* holder of the bonds, that the first division of the road was not completed by the time specified in the vote of the people. The court observed that it had been referred to no decision of the Supreme Court of Illinois, made prior to the issuing of the bonds in that case, namely, December 31, 1870, which held to the contrary of the views it announced. But, in the present case the decision in *Town of Eagle* v. *Kohn* was made prior to the issue of the bonds.

In *Randolph County* v. *Post*, 93 U. S. 502 [23: 957], the bonds were issued by the County of Randolph, in Illinois, January 1, 1872, under a vote of the people had June 6, 1870, which imposed a limitation of time as a condition precedent. In October, 1871, the county court extended the time from December 27, 1871, to February 1, 1872. This court held that it could do so notwithstanding the provision, above cited, in the Constitution of July 2, 1870. But the Act of April 16, 1869, does not appear to have been before this court, and the decision in *Town of Eagle* v. *Kohn* was not made until more than six years after the vote was had, and more than four years after the bonds were issued, in *Randolph County* v. *Post*.

In *Concord* v. *Robinson*, 121 U. S. 165 [30: 885], this court held that subscriptions and donations in aid of railroads, voted by municipal corporations of Illinois, prior to July 2, 1870, such vote being authorized by laws in force when it was taken, could be completed after that date, according to the conditions attached to the vote. In that case, the vote of the Town of Concord, Illinois, had been had [544] on November 20, 1869, in favor of levying a tax to raise a sum of money as a donation to a railroad company, provided the company should run the road through two specified villages. The road was never constructed into or through either of them, and the vote was not for the issue of bonds, but for levying a tax; but bonds were issued in 1871, and this court held them void, in a suit against the town on coupons cut from them, the bonds reciting on their face that they were issued under and by virtue of a specified law of Illinois, which law, however, only authorized towns, including the town in question, to make a donation in aid of the particular road in question, the money to be raised by taxation.

Without considering other grounds on which our decision might be rested, we are of opinion that *the decree of the Circuit Court must be affirmed.*

[514]

JOSÉ MENENDEZ ET AL., *Appts.*,
v.
ROBERT S. HOLT ET AL.

(See S. C. Reporter's ed. 514–525.)

Trademark, when protected—qualities—usefulness—defense—prior use—right of firm—delay in suing—license—damages.

1. In an action for an injunction to restrain defendants from using a certain trademark for flour, which consisted of the words "La Favorita," the fact that plaintiffs were not the actual manufacturers of the flour, upon which they placed such words, does not deprive them of the right to be protected in the use of that brand as a trademark.

2. The brand did not indicate by whom the flour was manufactured; but it did indicate the origin of its selection and classification, and it evidenced that the skill, knowledge and judgment of plaintiffs had been exercised in ascertaining that the particular flour so marked was possessed of a merit rendered definite by their examination and of a uniformity rendered certain by their selection.

3. The fact that flour so marked acquired an extensive sale, because the public had discovered that it might be relied on as a uniformly meritorious quality, demonstrates that the brand deserves protection.

4. Plaintiffs having acquired the exclusive right to the words "La Favorita," as applied to this particular vendible commodity, it is no answer to their action to say that there was no invasion of that right because the name accompanying these words, upon flour sold by defendants, varied from that used by the plaintiffs.

5. A casual prior public use of such words, by another manufacturer of flour, over twenty years ago, which use was discontinued before plaintiffs appropriated the words to identify their own flour, and there was no attempt to resume it, is not a sufficient defense to such action.

6. When a partner retires from a firm, assenting to or acquiescing in the retention by the other partners of possession of the old place of business and the future conduct of the business by them under the old name, the good will remains with the latter—including the firm's trademarks.

7. The intentional use of another's trademark is a fraud. Mere delay or acquiescence by the owner cannot defeat the remedy by injunction in support of the legal right, unless it has been continued so long and under such circumstances as to defeat the right itself.

8. Where consent by the owner to the use of his trademark by another is to be inferred from his knowledge and silence merely, it lasts no longer than the silence from which it springs; it is, in reality, no more than a revocable license.

9. Where there is no pretense of abandonment, delay in bringing suit may preclude recovery of damages for prior infringement, but will not destroy the right to prevention of further injury.

[No. 77].

Argued Nov. 14, 1888. Decided Dec. 10, 1888.

APPEAL from a decree of the Circuit Court of the United States for the Southern District of New York, for a perpetual injunction restraining the use of a trademark. *Affirmed.*

Opinion below, 23 Fed. Rep. 869.

Statement by *Mr. Chief Justice* **Fuller:** [515]

Appellees, partners in business under the firm name of Holt & Company, filed their bill of complaint July 17, 1882, against appellants, engaged in business under the firm name of José Menendez & Brother, alleging that they were dealers in and bought and sold flour and grain; that Robert S. Holt had theretofore been for more than twenty-five years at the head of the firm of Holt & Company, which firm had from time to time been changed or dissolved by the retirement of various members, but in each

such instance a new firm had been immediately formed and succeeded to the firm name, good will, brands, trademarks and other assets of the preceding firm, so that there had been no interruption of the name and business identity of Holt & Company for over twenty-five years, during which time said firm had had a high reputation in the trade; that complainants were now legally seised of the good will and all the trademarks ever at any time used by the firm; that they were the owners of a certain trademark for flour, which consisted of the fanciful words "La Favorita," which was originated by the firm and had been used by it for more than twenty years, to distinguish a certain flour of their selection and preparation; that said firm at all times exercised great care in the selection, packing and preparation of the flour packed and sold by them under the said brand, "La Favorita," and had carefully advertised the same, and by their care and efforts extensively introduced it to the trade, so that the said brand had come to be widely known and sought after by the trade, and the sale of flour so branded constituted an important part of the firm's business; that the brand was applied by stenciling it on the barrels; and that it had been duly registered by the firm in pursuance of law. Defendants were charged with having made use of the brand as a mark for flour of their own preparation or selection, in violation of complainants' rights.

[516] The answer admitted the existence of the trademark and that the defendants had used it, but denied that Holt & Co. were the owners, and averred that one Stephen O. Ryder was a member of Holt & Co. from 1861 to 1868, and had since used, and was entitled to use, said trademark as his own; that said Ryder put his own name on flour in connection with the name "La Favorita;" and that defendants had sold such flour as the special selection of said Ryder, and not as selected by complainants.

Evidence was adduced in relation to the connection of Ryder with the firm of Holt & Co., his retirement therefrom, and the ownership of the brand thereupon, to establish the use of the trademark by Ryder and others without protest on complainants' part; also, subject to objection, to show a prior use of the same as a trademark for flour.

It appeared that Holt & Co. deposited *fac similes* of the trademark October 17, 1881, in the Patent Office, and that it was duly registered February 28, 1882.

The circuit court refused an accounting, but held complainants entitled to the exclusive use of the words as a brand or trademark for flour, and that the defendants had infringed the rights of complainants in the use of the words on flour not prepared by complainants, and decreed a perpetual injunction. From that decree this appeal was prosecuted, and a reversal is asked on the grounds that the words "La [520] Favorita," as used by the complainants, cannot be protected as a trademark; that there has been no infringement; that the words had been used as a brand before being used by Holt & Co.; that the title of Holt & Co. was not superior to that of S. O. Ryder; and that whatever rights complainants may once have had, had been forfeited by laches.

Mr. **Arthur v. Briesen,** for appellants:

The brand "La Favorita" is not a trademark. Anything that is merely descriptive of the properties, style or quality is open to all.

Del. & H. Canal Co. v. *Clark*, 80 U. S. 13 Wall. 311 (20: 581); *Amoskeag Mfg. Co.* v. *Trainer*, 101 U. S. 51 (25: 993).

Stale claims are never favored in equity.

Stearns v. *Page*, 48 U. S. 7 How. 819 (12: 928); *Badger* v. *Badger*, 2 Cliff. 154; *Marsh* v. *Whitmore*, 88 U. S. 21 Wall. 185 (22: 485); *Brown* v. *Buena Vista County*, 95 U. S. 161 (24: 423); *Elmendorf* v. *Taylor*, 23 U. S. 10 Wheat. 152 (6: 289); *Piatt* v. *Vattier*, 34 U. S. 9 Pet. 405 (9: 173); *Maxwell* v. *Kennedy*, 49 U. S. 8 How. 210 (12: 1051); *Badger* v. *Badger*, 69 U. S. 2 Wall. 87 (17: 836); *Gleason* v. *Dist. Col.* 127 U. S. 133 (32: 92); *Richards* v. *Mackall*, 124 U. S. 183 (31: 396); *Sullivan* v. *Portland & K. R. Co.* 94 U. S. 806, 811 (24: 324, 326); *Hume* v. *Beale*, 84 U. S. 17 Wall. 336 (21: 602); *Hayward* v. *Eliot Nat. Bank*, 96 U. S. 611, 617 (24: 855, 857); *Speidel* v. *Henrici*, 120 U. S. 377, 387 (30: 718, 719); *McKnight* v. *Taylor*, 42 U. S. 1 How. 161 (11: 86); *Bowman* v. *Wathen*, 42 U. S. 1 How. 189 (11: 97); *Wagner* v. *Baird*, 48 U. S. 7 How. 234 (12: 681); *Godden* v. *Kimmell*, 99 U. S. 201 (25: 431); *Graham* v. *Boston, H. & E. R. Co.* 118 U. S. 161 (30: 196); *Holgate* v. *Eaton*, 116 U. S. 33 (29: 538); *Wollensak* v. *Reiher*, 115 U. S. 96 (29: 350).

Mr. **Rowland Cox,** for appellees:

A trademark which consists of a word is a short phrase between buyer and seller, which the owner alone is entitled to employ for commercial purposes.

Hier v. *Abrahams*, 82 N. Y. 519; *Congress & E. Spring Co.* v. *High Rock C. Spring Co.* 45 N. Y. 291.

Acquiescence of long standing is no bar to an injunction, although it precludes the party acquiescing from any right to an account for past profits.

Consolidated Fruit Jar Co. v. *Thomas*, Cox, Manual, 665; *Fullwood* v. *Fullwood*, L. R. 9 Ch. Div. 176; *Rodgers* v. *Rodgers*, 31 L. T. N. S. 285; *Blackwell* v. *Crabb*, 36 L. J. Ch. 504.

Mr. Chief Justice **Fuller** delivered the opinion of the court:

The fact that Holt & Co. were not the actual manufacturers of the flour, upon which they had for years placed the brand in question, does not deprive them of the right to be protected in the use of that brand as a trademark.

They used the words "La Favorita" to designate flour selected by them, in the exercise of their best judgment, as equal to a certain standard. The brand did not indicate by whom the flour was manufactured, but it did indicate the origin of its selection and classification. It was equivalent to the signature of Holt & Co. to a certificate that the flour was the genuine article which had been determined by them to possess a certain degree of excellence. It did not, of course, in itself indicate quality, for it was merely a fancy name and in a foreign language, but it evidenced that the skill, knowledge, and judgment of Holt & Co. had been exercised in ascertaining that the particular flour so marked was possessed of a merit rendered definite by their examination and of

a uniformity rendered certain by their selection. The case clearly does not fall within the rule announced in *Amoskeag Manufacturing Company* v. *Trainer*, 101 U. S. 51, 55 [25:993, 994], that "Letters or figures which, by the custom of traders, or the declaration of the manufacturer of the goods to which they are attached, are only used to denote quality, are incapable of exclusive appropriation, but are open to use by anyone, like the adjectives of the language;" or in *Raggett* v. *Findlater*, L. R. 17 Eq. 29, where an injunction to restrain the use upon a trade label of the term "nourishing stout" was refused on the obvious ground that "nourishing" was a mere English word denoting quality. And the fact that flour so marked acquired an extensive sale, because the public had discovered that it might be relied on as of a uniformly meritorious quality, demonstrates that the brand deserves protection rather than [521] that it should be debarred therefrom, on the ground, as argued, of being indicative of quality only. *Burton* v. *Stratton*, 12 Fed. Rep. 696; *Godillot* v. *Harris*, 81 N. Y. 263; *Ransome* v. *Graham*, 51 L. J. Ch. 897.

Holt & Co., then, having acquired the exclusive right to the words "La Favorita," as applied to this particular vendible commodity, it is no answer to their action to say that there was no invasion of that right because the name of S. O. Ryder accompanied the brand upon flour sold by appellants, instead of the name of Holt & Co. That is an aggravation and not a justification, for it is openly trading in the name of another upon the reputation acquired by the device of the true proprietor. *Gillott* v. *Esterbrook*, 47 Barb. 455; *S. C.* 48 N. Y. 374; *Coats* v. *Holbrook*, 2 Sandf. Ch. 586.

These views dispose of two of the defenses specifically urged on behalf of appellants, and we do not regard that of prior public use, even if it could be properly considered under the pleadings, as entitled to any greater weight. Evidence was given to the effect that from 1857 to 1860 the words "La Favorita" were occasionally used in St. Louis by Sears & Co., then manufacturing in that city, as designating a particular flour; but the witnesses were not able to testify that any had been on sale there under that brand (unless it were that of Holt & Co.) for upwards of twenty years. The use thus proven was so casual and such little importance apparently attached to it, that it is doubtful whether Sears & Co. could at any time have successfully claimed the words as a trademark, and, at all events, such use was discontinued before Holt & Co. appropriated the words to identify their own flour, and there was no attempt to resume it.

It is argued, however, that the title of Holt & Co. to the use of the mark was not superior to that of S. O. Ryder, because it is said that Ryder, upon leaving the firm, took with him his share of the good will of the business, and consequently of the trademarks, and hence that the defendants below rightfully sold flour under the brand "La Favorita," when selected by Rider and so marked by him.

Good will was defined by *Lord* Eldon, in [522] *Cruttwell* v. *Lye*, 17 Ves. 335, 346, to be "nothing more than the probability that the old customers will resort to the old place," but *Vice-Chancellor* Wood in *Churton* v. *Douglas*, Johns. (H. R. V.) 174, 188, says it would be taking too narrow a view of what is there laid down by *Lord* Eldon, to confine it to that, but that it must mean every positive advantage that has been acquired by the old firm in the progress of its business, whether connected with the premises in which the business was previously carried on, or with the name of the late firm, or with any other matter carrying with it the benefit of the business.

It may be that where a firm is dissolved and ceases to exist under the old name, each of the former partners would be allowed to obtain "his share" in the good will, so far as that might consist in the use of trademarks, by continuing such use in the absence of stipulation to the contrary; but when a partner retires from a firm, assenting to or acquiescing in the retention by the other partners of possession of the old place of business and the future conduct of the business by them under the old name, the good will remains with the latter as of course.

Holt & Co. commenced business in 1845, and had had an uninterrupted existence under that name since 1855; the trademark in question was adopted by the senior member of the firm in 1861, and had been thereafter in continuous use; Ryder became a partner in 1861, and retired February 1, 1869, when a circular was issued, in which he participated, announcing the dissolution by his retirement, the continuance of the business by the other partners under the same firm name, and the formation of another partnership by Ryder with one Rowland, to transact the flour and commission business at another place, under the name of Rowland & Ryder.

In addition to these facts it is established, by the preponderance of evidence, that it was verbally agreed, at the time Ryder retired, that he surrendered all interest in the brands belonging to Holt & Co. Ryder attempts to deny this, but his denial is so qualified as to render it unreliable as against the direct and positive character of the evidence to the contrary. Indeed, [523] when asked why the brands were not made the subject of appraisement when he went out, as it was conceded all the other property of the firm was, he says that it was because he "gave up all right, title and interest to those valuable brands to Robert S. Holt, out of friendship, so there was no occasion for it." In our judgment, Ryder's claim to any interest in the good will of the business of Holt & Co., including the firm's trademarks, ended with his withdrawal from that firm.

Counsel in conclusion earnestly contends that whatever rights appellees may have had were lost by *laches*, and the desire is intimated that we should reconsider *McLean* v. *Fleming*, 96 U. S. 245 [24:828], so far as it was therein stated that even though a complainant were guilty of such delay in seeking relief upon infringement as to preclude him from obtaining an account of gains and profits, yet, if he were otherwise so entitled, an injunction against future infringement might properly be awarded. We see no reason to modify this general proposition, and we do not find in the facts as disclosed by the record before us anything to justify us in treating this case as an exception.

The intentional use of another's trademark

is a fraud, and when the excuse is that the owner permitted such use, that excuse is disposed of by affirmative action to put a stop to it. Persistence then in the use is not innocent, and the wrong is a continuing one, demanding restraint by judicial interposition when properly invoked. Mere delay or acquiescence cannot defeat the remedy by injunction in support of the legal right, unless it has been continued so long and under such circumstances as to defeat the right itself. Hence, upon an application to stay waste, relief will not be refused on the ground that, as the defendant had been allowed to cut down half of the trees upon the complainant's land, he had acquired, by that negligence, the right to cut down the remainder (*Atty-Gen.* v. *Eastlake*, 11 Hare, 205); nor will the issue of an injunction against the infringement of a trademark be denied on the ground that mere procrastination in seeking redress for depredations had deprived the true proprietor of his legal right. *Fullwood* v. *Fullwood*, L. R. 9 Ch. Div. 176. Acquiescence to [524] avail must be such as to create a new right in the defendant. *Rodgers* v. *Nowill*, 3 DeGex, M. & G. 614. Where consent by the owner to the use of his trademark by another is to be inferred from his knowledge and silence merely, "It lasts no longer than the silence from which it springs; it is, in reality, no more than a revocable license." Duer, *J.*, *Amoskeag Mfg. Co.* v. *Spear*, 2 Sandf. 599; *Julian* v. *Hoosier Drill Co.* 78 Ind. 408; *Taylor* v. *Carpenter*, 3 Story, 458; *S. C.* 2 Woodb. & M. 1.

So far as the act complained of is completed, acquiescence may defeat the remedy on the principle applicable when action is taken on the strength of encouragement to do it; but so far as the act is in progress and lies in the future, the right to the intervention of equity is not generally lost by previous delay, in respect to which the elements of an estoppel could rarely arise. At the same time, as it is in the exercise of discretionary jurisdiction that the doctrine of reasonable diligence is applied, and those who seek equity must do it, a court might hesitate as to the measure of relief, where the use, by others, for a long period, under assumed permission of the owner, had largely enhanced the reputation of a particular brand.

But there is nothing here in the nature of an estoppel, nothing which renders it inequitable to arrest at this stage any further invasion of complainants' rights. There is no pretense of abandonment. That would require proof of nonuser by the owner or general surrender of the use to the public. The evidence is positive that Holt & Co. continuously used the trademark, always asserted their exclusive right to it, and never admitted that of any other firm or person, and, in the instance of every party, including Ryder, who used this brand on flour not of Holt & Co's selection, that use, when it came to their knowledge, was objected to by the latter, and personal notice given, while publication was also made in the newspapers, circulating where the flour was usually marketed, containing a statement of Holt & Co's rights and warning against imitations. It is idle to talk of acquiescence in view of these facts. Delay in bringing suit there was, and such delay as to preclude recovery of damages for prior infringement; but there was neither [525] conduct nor negligence which could be held to destroy the right to prevention of further injury.

The decree of the Circuit Court will, therefore, be affirmed.

ALFRED V. RYDER, *Appt.*, *v.* ROBERT S. HOLT ET AL.

(See S. C. Reporter's ed. 525).

Jurisdiction in suit on trademark.

Where defendant and complainants below were citizens of the same State, and the bill did not allege that the trademark in controversy was used on goods intended to be transported to a foreign country (Act of March 3, 1881, chap. 138, § 11, 21 Stat. at L. 502), the circuit court had no jurisdiction.

[No. 76.]

Argued Nov. 14, 1888. Decided Dec. 10, 1888.

APPEAL from a decree of the Circuit Court of the United States for the Southern District of New York, in an action to restrain the use of a trademark. *Reversed.*

The facts are stated in the opinion.

Mr. **Arthur v. Briesen**, for appellant.

Mr. **Rowland Cox**, for appellees.

Mr. Chief Justice **Fuller** delivered the opinion of the court:

It was stipulated in the circuit court that this cause should abide the event of *Menendez et al.* v. *Holt* [*ante*, 526], just decided, and the same decree in favor of complainants was, therefore, rendered in this as in that case. But it is now assigned for error that, as defendant and complainants below were citizens of the same State, and the bill did not allege that the trademark in controversy was "used on goods intended to be transported to a foreign country" (Act of March 3, 1881, chap. 138, § 11, 21 Stat. at L. 502), the circuit court had no jurisdiction, and the decree must be reversed for that reason.

The objection is well taken, and the decree is accordingly reversed.

THE FARMERS FRIEND MANUFACTURING COMPANY, *Appt.*, [506] *v.* THE CHALLENGE CORN PLANTER COMPANY.

(See S. C. Reporter's ed. 506–510.)

Reissued letters patent, when void.

The enlargement of the claims in the reissue of a patent so as to embrace machines which do not contain the only new feature of the machine claimed in the original patent, is void.

[No. 92].

Argued Nov. 21, 1888. Decided Dec. 10, 1888.

APPEAL from a decree of the Circuit Court of the United States for the Western District of Michigan, dismissing a suit in equity for the infringement of reissued letters patent. *Affirmed.*

Reported below, 23 Fed. Rep. 42.

The facts are stated in the opinion.

Messrs. E. E. Wood and **Edward Boyd,** for appellant:

Practical utility is an important factor in determining the novelty of an alleged invention.

Smith v. *Goodyear Dental V. Co.* 93 U. S. 486, 495 (23: 952, 954); *Webster Loom Co.* v. *Higgins,* 105 U. S. 580, 591 (26: 1177, 1181); *Eames* v. *Andrews,* 122 U. S. 40, 47 (30: 1064, 1066).

Whether a reissued patent is for the same invention as that in the original patent is a question for the court in an equity suit on a comparison of the two instruments.

Seymour v. *Osborne,* 78 U. S. 11 Wall. 545 (20: 39); *Mahn* v. *Harwood,* 112 U. S. 354, 358 (28: 665, 667).

A patentee has the right to claim by reissue everything shown as invention in the original patent, unless abandoned.

Parker & W. Co. v. *Yale Clock Co.* 123 U. S. 87, 99 (31: 100).

When an invention is new and useful, and fully shown in an original patent, the inventor can always secure the invention by a reissue.

Odell v. *Stout,* 22 Fed. Rep. 161; *Wheeler* v. *Clipper M. & R. Co.* 10 Blatchf. 181; *Wooster* v. *Handy,* 21 Fed. Rep. 51; *Coon* v. *Wilson,* 113 U. S. 268 (28: 963).

When the reissue is applied for within two years from the date of the original patent, the delay does not of itself render the reissue invalid or voidable.

Wollensak v. *Reiher,* 115 U. S. 96, 101 (29: 350, 351).

Mr. **Arthur Stem,** for appellee:

There may be invention in applying a new device to an old object, but in applying an old contrivance to a new use there can not.

Curtis, Patents, § 56; *Losh* v. *Hague,* 1 Web. Pat. Cas. 207; *Tucker* v. *Spalding,* 80 U. S. 13 Wall. 453 (20: 515); *Brown* v. *Piper,* 91 U. S. 37 (23: 200); *Roberts* v. *Ryer,* 91 U. S. 157 (23: 270); *Atlantic Works* v. *Brady,* 107 U. S. 192 (27: 438).

The fact that the planters were extensively made and sold while appellant slept on its rights for nearly two years is sufficient ground to invalidate the reissue.

Mahn v. *Harwood,* 112 U. S. 354 (28: 665).

The patentee could not then come back, and by reissue claim as his own what he had constructively dedicated to the public.

Sargent v. *Hall Safe & Lock Co.* 114 U. S. 63 (29: 67); *Shepard* v. *Carrigan,* 116 U. S. 593 (29: 723); *Sutter* v. *Robinson,* 119 U. S. 530 (30: 492); *Miller* v. *Bridgeport Brass Co.* 104 U. S. 350 (26: 783); *Flower* v. *Detroit,* 127 U. S. 563 (*ante,* 175); *Wollensak* v. *Reiher,* 115 U. S. 96 (29: 350); *Leggett* v. *Avery,* 101 U. S. 256 (25: 865).

The reissue covers an invention entirely different from that claimed in the original.

Parker & W. Co. v. *Yale Clock Co.* 123 U. S. 87 (31: 100); *Hoskin* v. *Fisher,* 125 U. S. 217 (31: 759); *Flower* v. *Detroit,* 127 U. S. 571 (*ante,* 178).

Mr. Justice **Gray** delivered the opinion of the court:

This is an appeal from a decree dismissing a bill in equity for the infringement of letters patent, issued August 10, 1880, and reissued July 11, 1882, for improvements in corn-planters. 28 Fed. Rep. 42.

The drawings referred to in the two patents were alike. So much of the specifications as related to the matter in controversy differed, as shown below; the words of the original patent omitted in the reissue being printed in brackets, and those inserted in the reissue printed in italics. [507]

"My invention relates to an improvement in *the* corn-planters of the class employing a main frame mounted on wheels, which main frame is combined with a runner-frame in front, and so attached to the main frame that it may be either a rigid or yielding planter, and also employing cone-gears and driving-chains to actuate the dropping mechanism for planting, and adapted to be used either as a rigid or yielding planter.

"My improvement consists, first, in the arrangement of a lifting hand-lever [mounted upon a shaft and] connected to [the] *a* foot-lever [centrally] *which is* pivoted to the main frame, the forward end of which lever is hinged to the runner-frame, [and] the several parts being so arranged that the runner-frame may be controlled by either the hand-lever or foot-lever, or both, at the will of the operator.

"*My invention further consists in combining with* the hand-lever [being combined with] detachable fastening devices, so as to be set in proper position to form a rigid planter, and so that the fastening devices can be dispensed with, and the hand and foot levers used to control the operation of the machine, when used as a yielding planter."

"In the accompanying drawings, figure 1 is a side elevation, partly in section, of a corn-planter embodying the first features of my invention. Fig. 2 is a front elevation, partly in section, of the same. Fig. 3 is a broken plan view, partly in section, showing the connection between the hand and foot levers."

"*d* represents a shaft journaled at one end [to] *in* the main frame and at the other to the seat-standard.

"*c'* represents the journal-bracket at the seat-standard, the foot-lever F being rigidly connected to and journaled on [the] shaft *d*.

"D represents a hand-lever rigidly [attached to] *connected to the foot-lever by* shaft *d, or other equivalent means.*

"E represents a segmental notch-plate rigidly fastened to the main frame A. [508]

"*d'* represents a lock for lever D, passing through the shoulder of lever D, and engaging at one end with the segmental notch-plate E, and hinged at the other end to a bell-crank lever, d^3, the movement of which locks and unlocks the lifting-lever D.

"When it is desired to operate the machine as a yielding planter, the locking device *d'* is thrown out of connection with the segment-plate, and secured by a hasp, d^2, the hand and foot levers then being free to vibrate with the runner-frame and under control of the operator. When the locking devices of the lifting-lever D are brought into operation, the operator sets the running-frame in any given position by means of lever D, the lock-lever holding it rigid, but under easy control of the hand; or the foot-lever may be used to assist in raising or lowering the frame, and the weight of the driver may be thrown upon the foot-lever to force the runners into the ground, if necessary."

The original patent contained the following claim, the words here printed in brackets being those omitted in the reissue:

"In a corn-planter having the rear main frame mounted on supporting wheels, the front runner-frame hinged or pivoted to the main frame, [and operated by an elevating and depressing lever pivoted to the main frame, having its front end slotted, and connected to the runner-frame by a bolt passing through said slot, in combination with the shaft *d* and the lifting hand-lever D, rigidly attached to said shaft, for elevating, depressing and controlling the runner-frame, substantially as herein set forth.]"

For this claim the reissue substituted the following four claims, the new words in which are here printed in italics:

"1. In a corn-planter having the rear main frame mounted on supporting wheels, *and* the front runner-frame hinged or pivoted to the main frame, *the combination of a foot-treadle and a hand-lever adapted to be used, in conjunction or independently, for the purpose of elevating or depressing the runners, substantially as herein set forth.*

[509] "2. In a corn-planter having the rear main frame mounted on supporting wheels, *and* the front runner-frame hinged or pivoted to the main frame, *a foot-treadle for elevating or depressing the runner-frame, in combination with a hand lock-lever, the foot-treadle and hand-lever adapted to be used in conjunction for forcing and locking the runners into the ground or lifting and locking them out of the ground, substantially as herein set forth.*

"3. In a corn-planter having the rear main frame mounted on supporting wheels, *and* the front runner-frame hinged or pivoted to the main frame, *a foot-treadle for elevating or depressing the runner-frame, in combination with a hand-lever rigidly connected therewith, that either hand-lever or treadle may be used for forcing the runners into the ground or lifting them out of the ground, substantially as herein set forth.*

"4. *The combination*, in a corn-planter have the rear main frame mounted on supporting wheels, *and* a front runner-frame hinged or pivoted to the main frame, *of a foot-treadle for elevating the runner-frame, and a hand-lever for elevating or depressing the same, both arranged to move simultaneously when either is acted upon by an operator.*"

It thus appears that while the claims, both of the original patent and of the reissue, relate to a corn-planter having the rear main frame mounted on supporting wheels, and the front runner-frame hinged or pivoted to the main frame, the difference between them is this:

The claim in the original patent is limited to a lever having its front end slotted, and connected with the runner-frame by a bolt passing through the slot, in combination with a shaft journaled at one end to the main frame and at the other to the seat-standard, and with a lifting hand-lever rigidly attached to that shaft, for elevating, depressing and controlling the runner-frame.

In the reissue, on the contrary, the first and fourth claims undertake to cover any form of foot-lever or treadle and hand-lever used in combination for the purpose of elevating or depressing the runners; the second claim differs only in being restricted to a hand lock-lever used in connection with the foot-lever; and the [510 third claim, in requiring the two levers to be rigidly connected.

In the Kelly machine, patented September 14, 1875, and in public use before the plaintiff's invention, a foot-lever and hand-lever had been used in combination, rigidly connected together (certainly quite as much so as in the defendant's machine), and with a lock on the hand-lever.

The only feature of the plaintiff's machine which can possibly be considered as new is a slotted lever connected with the runner-frame by a bolt, and the hand-lever mounted upon a shaft journaled at one end to the main frame and at the other end to the seat-standard, thereby facilitating the depressing of the runners by a single movement. The claim in the original patent is limited to a mechanism containing that feature, which is not found in the defendant's machine. The enlargement of the claims in the reissue, so as to embrace machines not containing that feature, is void, under the rules established by recent decisions of this court, too numerous and familiar to require citation.

Decree affirmed.

HARRIET A. PURDY, Admrx. of WILLIAM [55'
A. PURDY, *Plff. in Err.*,
v.
THE TOWN OF LANSING.

(See S. C. Reporter's ed. 557–559.)

Town bonds, when invalid.

Town bonds, issued under the New York Act of 1871 in regard to the New York and Oswego Midland Railroad Company, without any previous action of the company designating all the counties through which would pass the road authorized by such Act of 1871 to be constructed, are issued without authority of law, and cannot be the foundation of a judgment against the town.

[No. 96.]

Argued Nov. 23, 26, 1888. Decided Dec. 10, 1888.

IN ERROR to the Circuit Court of the United States for the Northern District of New York, to review a judgment in favor of the town, in an action upon town bonds. *Affirmed.*

The facts are stated in the opinion.

Mr. **James R. Cox**, for plaintiff in error:

Whether the statutory prerequisites had all been complied with, the railroad commissioners were charged with the duty of deciding; and their issuing these bonds was, to the purchaser, the strongest possible affirmation of compliance with all the statutory requirements, and the purchaser had the right to rely upon it.

Dodge Co. v. *Chandler*, 96 U. S. 205 (24: 625); *San Antonio* v. *Mehaffy*, 96 U. S. 314 (24: 817); *Davis* v. *Brown*, 94 U. S. 427 (24: 206); *Marshall Co.* v. *Schenck*, 72 U. S. 5 Wall. 772 (18: 556); *San Antonio* v. *Lane*, 32 Tex. 405; *Henry Co.* v. *Nicolay*, 95 U. S. 619 (24: 394).

The town is not at liberty to deny it, as against a good faith purchaser.

Grand Chute v. *Winegar*, 82 U. S. 15 Wall. 355 (21: 170); *Knox Co.* v. *Aspinwall*, 62 U. S. 21 How. 539 (16: 208); *Mercer Co.* v. *Hackett*, 68

U. S. 1 Wall. 88 (17: 548); *Venice* v. *Murdock*, 92 U. S. 494 (23: 588); *Davenport* v. *U. S., Lord*, 76 U. S. 9 Wall. 414 (19: 707); *Merchants Nat. Bank* v. *State Nat. Bank*, 77 U. S. 10 Wall. 644 (19: 1018).

Whether or not any of the conditions precedent of fact were complied with, he was not bound to inquire.

Marcy v. *Oswego*, 92 U. S. 642 (23: 750).

The bonds and the indorsement represent compliance with all precedent conditions and preliminary requirements of the statutes.

Oregon v. *Jennings*, 119 U. S. 75 (30: 325); *Roberts* v. *Bolles*, 101 U. S. 119 (25: 880); *Calhoun Co.* v. *Galbraith*, 99 U. S. 214 (25: 410); *Wilson* v. *Salamanca*, 99 U. S. 499 (25: 330); *Warren Co.* v. *Marcy*, 97 U. S. 96 (24: 977); *Hackett* v. *Ottawa*, 99 U. S. 86 (25: 363); *Coloma* v. *Eaves*, 92 U. S. 484 (23: 579); *Dixon Co.* v. *Field*, 111 U. S. 95 (28: 364).

If the previous location of the railroad through or near the Town of Lansing is to be regarded as one of these conditions precedent, the purchaser had the right to presume that it was done.

Marion Co. v. *Clark*, 94 U. S. 287 (24: 62).

The proposing purchaser of the bonds cannot be charged with any knowledge of errors of assessors, their affidavit being full and correct.

Ontario v. *Hill*, 99 N. Y. 329; *Knox Co.* v. *Aspinwall*, 62 U. S. 21 How. 539 (16: 208); *Bissell* v. *Jeffersonville*, 65 U. S. 24 How. 299 (16: 671); *Moran* v. *Miami Co.* 67 U. S. 2 Black, 722 (17: 342); *Gelpcke* v. *Dubuque*, 68 U. S. 1 Wall. 203 (17: 524); *Lynde* v. *Winnebago Co.* 83 U. S. 16 Wall. 6 (21: 272); *Kenicott* v. *Wayne Co.* 83 U. S. 16 Wall. 452 (21: 319).

The locating of this branch railroad through or near this town, and also 140 miles beyond it to Buffalo, was not, by the Act of April 5, 1871, intended to be a condition precedent to subscribing for the stock, or issuing the bonds.

James v. *Milwaukee*, 83 U. S. 16 Wall. 160 (21: 267); *Phelps* v. *Lewiston*, 15 Blatchf. 148; *Smith* v. *Yates*, 15 Blatchf. 92; *Callaway Co.* v. *Foster*, 93 U. S. 574 (23: 913).

A condition precedent must be always plain and explicit, and is not to be extracted from vague and doubtful words.

8 Coke, 90; Shep. Touch. 134; *Clinton* v. *Hope Ins. Co.* 45 N. Y. 464; *Woods* v. *Lawrence Co.* 66 U. S. 1 Black, 386 (17: 122); Addison, Cont. 136; Pars. Cont. 526; 1 Story, Cont. §§ 40–50.

The varied forms of expression in the many different town bonding Acts, contemplating proposed use of projected railroads, all mean the same thing, viz.: "Along the route;" *Pompton* v. *Cooper Union*, 101 U. S. 196 (25: 803); *Enfield* v. *Jordan*. 119 U. S. 695 (30: 529); "Situated along the route;" *Phelps* v. *Lewiston*, 15 Blatchf. 134; "Any part of the route of said railroad may be;" *Callaway Co.* v. *Foster*, 93 U. S. 567 (23: 911); "Through which the railroad may pass;" *Woods* v. *Lawrence Co.* 66 U. S. 1 Black, 386 (17: 122); *Callaway Co.* v. *Foster*, *supra*; *U. S.* v. *Collier*, 3 Blatchf. 325.

In the construction of a statute, the court will look to other statutes *in pari materia*.

Dwar. Stat. 189; *Re Rochester Water Comrs.* 66 N. Y. 413; *Rogers* v. *Bradshaw*, 20 Johns. 744; *McCartee* v. *Orphan Asylum Society*, 9 Cow. 507; *Rexford* v. *Knight*, 15 Barb. 642; 1 Kent, Com. 433; *Ailesbury* v. *Pattison*, 1 Doug. 27.

Why, then, should we look for such a condition precedent in the vague expression "may be located."

Smith v. *Yates*, 15 Blatchf. 89, 92.

In *Kirkbride* v. *Lafayette Co.* 108 U. S. 208 (27: 705), the construction put upon the statute at the time the bonds were voted and issued, by those interested in executing its provisions, was clearly recognized by this court.

See also *Green Co.* v. *Conness*, 109 U. S. 105 (27: 872); *Douglass* v. *Pike Co.* 101 U. S. 687 (25: 971).

As to newly discovered construction of statutes, see:

Mercer Co. v. *Hackett*, 68 U. S. 1 Wall. 94 (17: 549); *Bourbon Co.* v. *Block*, 99 U. S. 699 (25: 495); *Venice* v. *Murdock*, 92 U. S. 497 (23: 583); *Thompson* v. *Perrine*, 103 U. S. 806 (26: 612); *Horton* v. *Thompson*, 71 N. Y. 513.

Messrs. **Francis Kernan** and **H. V. Howland**, for defendant in error:

The towns had no power to aid in the construction of any railroad, unless expressly empowered to do so by a statute of the State; and the burden of proving its existence rests upon the party claiming by virtue of its exercise.

1 R. S. N. Y. 6th ed. 820, §§ 1, 2; *McClure* v. *Oxford*, 94 U. S. 429 (24: 129); *E. Oakland* v. *Skinner*, 94 U. S. 255, 258 (24: 125, 126); *S. Ottawa* v. *Perkins*, 94 U. S. 261, 262 (24: 155); *Wells* v. *Pontotoc Co.* 102 U. S. 625, 630 (26: 122, 124).

No power was conferred by this Law of 1871 upon the Town of Lansing to issue bonds in the aid of the construction of this extension, unless and until the board of directors of the company had fixed the termini of the extension and located the same between such termini.

Mellen v. *Lansing*, 19 Blatchf. 512; *S. C.* 20 Blatchf. 278; *Thomas* v. *Lansing*, 21 Blatchf. 119; *People* v. *Morgan*, 55 N. Y. 587, 591.

The plaintiff was not entitled to recover on any theory that he was a *bona fide* holder of bonds.

Where a municipality issues its bonds without any authority to do so they are void in the hands of a *bona fide* holder for value parted with; the authority to contract must exist before any protection to an innocent purchaser can be successfully claimed.

Marsh v. *Fulton Co.* 77 U. S. 10 Wall. 676, 682 (19: 1040, 1042); *E. Oakland* v. *Skinner*, *S. Ottawa* v. *Perkins*, *McClure* v. *Oxford*, and *Wells* v. *Pontotoc Co. supra*; *Hayes* v. *Holly Springs*, 114 U. S. 120–126 (29: 81–83).

The town was not estopped from alleging want of power to issue the bonds by anything recited in the bonds, or by the payment by the town officers and commissioners of two or three semi-annual installments of interest. Where the town has no legal power to issue obligations, its officers cannot, by their acts, render them valid.

Dixon Co. v. *Field*, 111 U. S. 83 (28: 360).

Mr. Justice **Harlan** delivered the opinion of the court: [558]

This is an action upon certain bonds, with interest coupons attached, issued in the name of the Town of Lansing, in the County of

Tompkins, New York, to the New York and Oswego Midland Railroad Company, a corporation created by the laws of that State. The parties consenting thereto in writing, the case was tried by the court without a jury, and upon the special facts found there was a judgment for the town.

The correctness of that judgment depends upon the construction to be given to the Act of the Legislature of New York, approved April, 5, 1871, entitled "An Act to Authorize the New York and Oswego Midland Railroad Company to Extend its Road, and to Facilitate the Construction Thereof." Laws of N. Y. 1871, Vol. 1, p. 586, chap. 298. By the first section of that Act it is provided: "The New York and Oswego Midland Railroad Company are hereby authorized and empowered to extend and construct their railroad from the City of Auburn, or from any point on said road easterly or southerly from said city, upon such route and location and through such counties as the board of directors of said company shall deem most feasible and favorable for the construction of said railroad, to any point on Lake Erie or the Niagara River." After giving authority to the company to locate, extend and construct certain branch roads, the section continues: "And any town, village, or city in any county, through or near which said railroad or its branches may be located, except such counties, towns or cities as are excepted from the provisions of the general bonding law, may aid or facilitate the construction of the said New York and Oswego Midland Railroad and its branches and extensions, by the issue and sale of its bonds in the manner provided for in the Act entitled 'An Act to Facilitate the Construction of the New York and Oswego Midland Railroad, and to Authorize Towns to Subscribe to the Capital Stock Thereof,' passed April fifth, eighteen hundred and sixty-six, and the Acts amendatory of and supplementary thereto."

In *Mellen* v. *Lansing*, 20 Blatchf. 278, 286, [559] involving substantially the same questions as are here presented, and in which case it became necessary to interpret the above statute, it was said: "Moreover, there is an inherent defect, in the fact that the company never, by any action of its directors, or otherwise, designated all the counties through which the road was to pass. Under the Act of 1871, the whole extension or branch must be located before the bonds of any town can be issued. It is not enough that a location be made through a particular county. So that even though the maps filed could be regarded as a location of so much of the western extension as was to pass through Tompkins County, there would be no authority for issuing the bonds until the whole extension or branch should be located. The board of directors must, in some way, adopt an entire route as feasible and favorable before the town bonds can be issued. This seems to have been the view of the Court of Appeals of New York in *People* v. *Morgan*, 55 N. Y. 587." These views were in accordance with the previous decision by the same court in *Mellen* v. *Lansing*, 19 Blatchf. 512, and were reaffirmed in *Thomas* v. *Lansing*, 21 Blatchf. 119.

We are of opinion that this construction of the statute is the proper one. The reasons therefor are fully stated in the cases above cited, and, as they are entirely satisfactory, no good purpose would be subserved by enlarging upon them in this opinion. As the bonds in suit were issued without any previous action of the company designating all the counties through which would pass the road authorized by the Act of 1871 to be constructed, they must be held to have been issued without authority of law, and cannot, therefore, be the foundation of a judgment against the town.

The judgment below is affirmed.

TRUSTEES OF DUBLIN TOWNSHIP, MERCER CO., OHIO, *Plffs. in Err.*, [510]
v.
THE MILFORD FIVE CENT SAVINGS INSTITUTION.

(See S. C. Reporter's ed. 510-514.)

Certificate of division of opinion—what questions may be certified.

This court cannot take jurisdiction of a case, upon certificate of division of opinion, where, besides the manifest attempt to refer to this court for decision substantially the whole case by the device of splitting it up into several questions, neither of the questions certified presents a distinct point or proposition of law, clearly and precisely stated.

[No. 943.]

Submitted Nov. 19, 1888. Decided Dec. 10, 1888.

IN ERROR to the Circuit Court of the United States for the Northern District of Ohio, to review a judgment for plaintiff upon coupons of bonds, issued in aid of a railroad, upon certificate of division of opinion.

On motion to dismiss. *Granted.*

Statement by *Mr. Justice* **Gray**:

The original action was brought by the Milford Five Cent Savings Institution, a New Hampshire Corporation, against the Trustees [511] of Dublin Township, Mercer County, Ohio, upon coupons attached to bonds issued by the defendants to aid in the construction of a railroad, under the Statute of Ohio of April 10, 1880. 77 Ohio Laws, 165.

Each count of the petition set forth at length provisions of that statute, and the facts relied on as constituting the cause of action, and alleged that the statute was not in conflict with the Constitution of Ohio, as had been determined by the supreme court of the State in *Walker* v. *Cincinnati*, 21 Ohio St. 14.

The answer, occupying six closely printed pages of the record, set up seven defenses to the action, the nature of four of which, constituting the greater part of the answer, is indicated by the following abstract:

The third defense asserted that the statute was in conflict with the Constitution of the State, set forth at length a number of facts and reasons supposed to bear upon that point, alleged that the Supreme Court of Ohio, by a uniform series of decisions, had held this and similar statutes to be in violation of the Constitution of the State and void, and denied that this case was similar to that of *Walker* v. *Cincinnati*, mentioned in the petition.

The fourth defense was that one Counter-

man and one Keith, two, in behalf of all, taxpayers of the county brought suit in a court of the county against these defendants and the county auditor and treasurer, to restrain the levy and collection of taxes to pay the bonds, because of the unconstitutionality of the statute; that the suit was defended upon its merits and resulted in a decree for a perpetual injunction; and that the case was reported in 38 Ohio St. 515. A copy of the record in that case was filed with and referred to as part of the answer in the present case, occupying eleven pages of this record.

The fifth defense was that the present plaintiff, as relator, filed a petition in a court of the county against these defendants and the county auditor for a mandamus to compel the levy and assessment of a tax to pay the bonds, and obtained an alternative writ of mandamus, and the defendants filed an answer setting up the [512] unconstitutionality of the statute, to which the plaintiff demurred, and thereupon judgment was entered, holding the answer valid and dismissing the petition, which was still unreversed and in full force. A copy of the record of that case, occupying six pages, was referred to and made part of the answer in the present case.

The seventh defense, "reiterating and reaverring all the allegations of said third defense, as if again here rewritten," set out the provision of article 8, section 6, of the Constitution of Ohio, by which "the General Assembly shall never authorize any county, city, town or township, by a vote of its citizens or otherwise, to become a stockholder in any joint stock company, corporation or association whatever, or to raise money for, or loan its credit to or in aid of any such company, corporation or association;" and, after stating other facts and reasons supposed to bear upon the question, alleged "that it was well known and understood by all people, including the plaintiff, who gave the matter any consideration whatever, that the Act in question was intended as an evasion of the provisions of the Constitution aforesaid;" and "that the Act in question and the scheme therein contemplated, together with the concurrent legislation in reference to the same projected railway, was similar to that which had been decreed by the Supreme Court of the State of Ohio to be in plain violation of the Constitution of the State of Ohio, in the case of *Taylor* v. *Ross County*, 23 Ohio St. 22."

The plaintiff demurred to each of these grounds of defense, for the reason that it did not state facts sufficient to constitute a defense to the action.

Upon argument before the Circuit Judge and the District Judge, the court, in accordance with the opinion of the Circuit Judge, sustained the demurrers, and, the defendants not wishing to answer further, gave judgment for the plaintiff in the sum of $3,819.15, and the Judges certified a division of opinion upon the following questions of law:

"First. Whether the said answer showed that the law under which the bonds sued upon were issued was in conflict with the Constitution of the State of Ohio and therefore void.

[513] "Second. Whether, if said legislation is in conflict with the Constitution of the State of Ohio, there had been such decision of the state courts prior to its passage and to the sale or negotiation of the bonds alleged in the petition, that such and similar legislation was constitutional and valid, as entitles the plaintiff to recover under the decisions of the federal courts, notwithstanding the Act in question had been declared to be unconstitutional by the court of last resort in the State of Ohio after said bonds were sold.

"Third. Whether the former suits, actions and proceedings in the state courts, or any of them, alleged in said answer, were and are such adjudication of the questions involved in this action as amounts to a bar to the plaintiff's right to recover herein."

The defendants sued out a writ of error, which the plaintiff now moved to dismiss for insufficiency of the certificate to give this court jurisdiction.

Messrs. **Oliver J. Bailey, James H. Sedgwick, S. E. Brown** and **J. C. Lee,** for defendant in error, in support of motion to dismiss:

To pass upon the propositions presented is to determine the entire case.

Jewell v. *Knight*, 123 U. S. 426 (31: 190); *Waterville* v. *Van Slyke*, 116 U. S. 699 (29: 772); *Cal. A. S. Paving Co.* v. *Molitor*, 113 U. S. 609 (28: 1106).

The whole case cannot be broken up into points, as is attempted here, and sent up to this court upon a certificate of difference of opinion.

Weeth v. *New Eng. S. Mortg. Co.* 106 U. S. 605 (27: 99); *U. S.* v. *Bailey*, 34 U. S. 9 Pet. 267 (9: 124); *Nesmith* v. *Sheldon*, 47 U. S. 6 How. 41 (12: 335).

This court will refuse jurisdiction when it is obvious that the case was certified *pro forma*.

Webster v. *Cooper*, 51 U. S. 10 How. 54 (13: 325); *Colo. Cent. R. Co.* v. *White*, 101 U. S. 98 (25: 860).

Mr. **John H. Doyle,** for plaintiffs in error, in opposition:

Even if any of these questions are bad, if one of them is sufficiently certified it gives the court jurisdiction.

State Bank v. *St. Louis Rail Fastening Co.* 122 U. S. 21-23 (30: 1121); *Enfield* v. *Jordan*, 119 U. S. 680 (30: 523); *U. S.* v. *Northway*, 120 U. S. 327 (30: 664).

Mr. Justice **Gray** delivered the opinion of the court:

By the rules often laid down in former cases and restated at the last term in *Jewell* v. *Knight*, 123 U. S. 426 [31: 190], and at the present term in *Fire Ins. Asso.* v. *Wickham*, *ante*, 503, this court cannot take jurisdiction of this case because, besides the manifest attempt to refer to this court for decision substantially the whole case, by the device of splitting it up into several questions, neither of the questions certified presents a distinct point or proposition of law clearly and precisely stated, but each requires this court to find out for itself the point intended to be presented, by searching through the allegations of the answer and the provisions of the statute relied on by the plaintiff, and by also examining either the whole [514] Constitution of the State, or else reports or records of decisions of its courts, referred to in the answer and made part thereof.

The certificate is even more irregular and

insufficient than one undertaking to present the question, arising on demurrer or otherwise, whether an indictment or a count therein sets forth any offense which this court has constantly held not to be a proper subject of a certificate of division of opinion. *U. S.* v. *Briggs*, 46 U. S. 5 How. 208 [12: 119]; *U. S.* v. *Northway*, 120 U. S. 327 [30: 664].

Writ of error dismissed for want of jurisdiction.

---

[598] GOODYEAR'S INDIA RUBBER GLOVE MANUFACTURING COMPANY *et al.*, *Appts.*,

v.

THE GOODYEAR RUBBER COMPANY.

(See S. C. Reporter's ed. 598-604.)

Trademark—Goodyear Rubber Company—name descriptive of goods — not proper as trademark.

1. The name of Goodyear Rubber Company is not one capable of exclusive appropriation.
2. Names which are descriptive of a class of goods cannot be adopted as trademarks, and be thereby appropriated to the exclusive right of anyone. The addition of the word "company" to the name does not create any exclusive right to the use of such name.
3. The trademark must, either by itself or by association, point distinctively to the origin or ownership of the article to which it is applied.
4. The designation "Goodyear Rubber Company" not being subject to exclusive appropriation, any use of terms of similar import, or any abbreviation of them, must be alike free to all persons.

[No. 49.]

Argued Oct. 30, 31, 1888. Decided Dec. 10, 1888.

APPEAL from a decree of the Circuit Court of the United States for the Southern District of New York, perpetually enjoining defendants from using the name of Goodyear's Rubber Manufacturing Company, or the name of Goodyear Rubber Company, or any abbreviation thereof, in their business. *Reversed.*

Reported below, 22 Blatchf. 421.

The facts are stated in the opinion.

Messrs. Frederic H. Betts, **Samuel R. Betts** and **J. E. Hindon Hyde**, for appellants:

The name Goodyear Rubber Company is not a trademark.

Schneider v. *Williams*, 44 Off. Gaz. 1400.

In a trademark suit, relief is granted against conduct which satisfies the court that a defendant has represented to the public that he is the plaintiff and that his goods are those of plaintiff.

McLean v. *Fleming*, 96 U. S. 245 (24: 828); *Avery* v. *Meikle*, 27 Off. Gaz. 1027; *Sawyer* v. *Horn*, 1 Fed. Rep. 24; *Sawyer Crystal Blue Co.* v. *Hubbard*, 32 Fed. Rep. 388; *Moxie Nerve Food Co.* v *Baumbach*, Id. 205.

Mere general allegations of fraud amount to nothing.

Stearns v. *Page*, 48 U. S. 7 How. 819 (12:928); *Beaubien* v. *Beaubien*, 64 U. S. 23 How. 190 (16: 484).

The name Goodyear Rubber Company is a purely descriptive name, and as such is incapable of exclusive appropriation.

Singer Mfg. Co. v. *Stanage*, 6 Fed. Rep. 279; *Singer Mfg. Co* v. *Riley*, 11 Fed. Rep. 706; *Singer Mfg. Co.* v. *Loog*, L. R. 8 App. Cas. 15; *Brill* v. *Singer Mfg. Co.* 41 Ohio St. 127; *Fairbanks* v, *Jacobus*, 14 Blatchf. 337; *Gally* v. *Colt's Pat. Fire-Arms Mfg. Co.* 30 Fed. Rep. 118; *Lorillard* v. *Pride*, 28 Fed. Rep. 434; *Del. & H. Canal Co.* v. *Clark*, 80 U. S. 13 Wall. 311 (20: 581).

The defendant and not the complainant is entitled to any relief that can be given.

Clement v. *Maddick*, 5 Jur. N. S. 592; *Matsell* v. *Flanagan*, 2 Abb. Pr. N. S. 459; *American Grocer Pub. Asso.* v. *Grocer Pub. Co.* 25 Hun, 398.

A corporation may be shown by several names.

Conro v. *Port Henry Iron Co.* 12 Barb. 27; Abbott, Dig. Law of Corporations, 538; *All Saints Church* v. *Lovett*, 1 Hall, 191; *Dutchess Cotton Mfg. Co.* v. *Davis*, 14 Johns. 238; *Dutch West India Co.* v. *Van Moses*, 1 Str. 614; *Knight* v. *Mayor of Wells*, 1 Ld. Raym. 80; *Minot* v. *Curtis*, 7 Mass. 441; *South School Dist.* v. *Blakeslee*, 13 Conn. 227.

The circuit court had no jurisdiction of this case.

Sloane v. *Anderson*, 117 U. S. 275 (29: 899); *Ayres* v. *Wiswall*, 112 U. S. 187 (28: 693); *Peninsular Iron Co.* v. *Stone*, 121 U. S. 631 (30: 1020.)

Mr. **W. W. Mac Farland**, for appellee:

The title to the name Goodyear Rubber Company, and the exclusive right to its use, belongs to the complainant.

Newman v. *Alvord*, 51 N. Y. 189.

Upon the facts the decree should be affirmed.

Caswell v. *Davis*, 58 N. Y. 223; *Ainsworth* v. *Walmsley*, L. R. 1 Eq. 524; *Celluloid Mfg. Co.* v. *Cellonite Mfg. Co.* 32 Fed. Rep. 97; *State* v. *Hutchinson*, 2 Ry. & Corp. Jour. 252; *Colton* v. *Thomas*, 2 Brewst. 308; *Merchant Bkg. Co.* v. *Merchants Joint Stock Bank*, 26 Week. Rep. 847; *Singer Machine Mfrs.* v. *Wilson*, L. R. 3 App. Cas. 376; *Colman* v. *Crump*, 70 N. Y. 573; *Lee* v. *Haley*, L. R. 5 Ch. 155; *Brooklyn White Lead Co.* v. *Masury*, 25 Barb. 418.

The court should decline to listen to the point that the cause was not removable after the long lapse of time.

French v. *Hay*, 89 U. S. 22 Wall. 238 (22: 854).

If there was federal jurisdiction, it is enough.

Canal & C. Sts. R. Co. v. *Hart*, 114 U. S. 654 (29: 226).

A formal party against whom no relief is asked does not affect the jurisdiction.

Hatch v. *Chicago, R. I. & P. R. Co.* 6 Blatchf. 105; *McHenry* v. *New York, P. & O. R. Co.* 25 Fed. Rep. 65; *Wood* v. *Davis*, 59 U. S. 18 How. 467 (15: 460); *Harter Twp.* v. *Kernochan*, 103 U. S. 562 (26: 411); *Bacon* v. *Rives*, 106 U. S. 99 (27: 69); *Removal Cases*, 100 U. S. 457 (25: 593).

Mr. Justice **Field** delivered the opinion of the court: [599]

This was a suit in equity, brought by the Goodyear Rubber Company, a corporation created under the laws of New York, to restrain Goodyear's India Rubber Glove Manufacturing Company, a corporation created under the laws of Connecticut, and others, defendants

below, from using the name of "Goodyear's Rubber Manufacturing Company," or any equivalent name in their business. The bill alleges that the plaintiff was organized as a corporation on the 20th of November, 1872, for the purpose of manufacturing and dealing in India rubber and gutta-percha goods, under its corporate name, in the City of New York; that it engaged in business in that city, where it has three large warehouses, with branch houses in other cities; that since its organization it has continually used its corporate name on signs at its various places of business and factories, on its bill and letter heads, on its various articles of manufacture, and on its corporate seal in contracts and other business transactions; that by reason thereof it has become possessed of an exclusive right and title to its corporate name, which, from its inseparable connection with the business and good will of the company, has become of great value; and that its exclusive use is essential to the prosperity of the plaintiff.

The bill then sets forth that at the time of its organization there existed a corporation carrying on business in the City of New York under the name of Goodyear's India Rubber Glove Manufacturing Company, and dealing in various articles of which India rubber formed a component part, its business being similar to that of the plaintiff; that prior to the organization of the plaintiff in November, 1872, that company conducted its business under its corporate name, using it on its business signs, on its letter and bill heads, on its seal, and in all contracts and business transactions; that after the creation and organization of the [600] plaintiff that Company began to call itself Goodyear's Rubber Manufacturing Company, and, for the purpose of diverting to itself the business and good will of the plaintiff, resorted to various devices and contrivances having for their object the imitation and appropriation to its use of the plaintiff's name; and among these devices was the representation of the words "India" and "Glove," sometimes in small letters and sometimes by initials, thereby constituting a name for practical purposes almost identical with the name of the plaintiff, producing much loss and inconvenience to plaintiff's business by causing a diversion of letters and telegrams addressed to it; that for the like purpose of taking from the plaintiff its customers and trade, and appropriating its good will, that Company, on or about the first of January, 1882, adopted for its principal sign the name "Goodyear's Rubber Mfg. Co." over the entrance to and in front of its warehouses; and that these devices deceive the public and divert business and customers from the plaintiff, by which it sustains, and, without the interference of this court, will in the future sustain, great loss and damage.

The bill also alleges that the defendants Allerton and Vermule, with other persons unknown to the plaintiff, pretend to be a corporation under the name of Goodyear's Rubber Manufacturing Company, and that they are the principal owners and managers of the business carried on under the name of Goodyear's India Rubber Glove Manufacturing Company, and of Goodyear's Rubber Manufacturing Company, and as such direct and control whatever is done under the names of both.

The several defendants appeared and filed answers to the bill. These allege in similar terms that the defendant, Goodyear's India Rubber Glove Manufacturing Company, was organized as a Corporation under that name in Connecticut in 1847, for the purpose of manufacturing India rubber goods, and in 1849 obtained license for their manufacture under patents of Charles Goodyear, and continued in that business during the existence of those patents; that after their expiration and in 1865, and continuously since, it has manufactured and sold very largely all kinds and classes of India rubber goods, treated according to the [601] patents of Goodyear; that it has been for upwards of twenty years the most prominent corporation or association in the City of New York engaged in the manufacture of those goods, and has become known to the trade by abbreviated and generally used titles of "Goodyear's Rubber Manufacturing Company," or "Goodyear Rubber Company," or "The Goodyear's Company," and other similar titles abbreviated from its full corporate name; that the name of "Goodyear" in connection with the word "Company," or "Co.," or with similar brief letters or words indicating a company engaged in rubber manufacturing, has been its distinguishing characteristic; that by adoption of the name of Goodyear in connection with its business and acquiescence of the public therein, and general usage, that Company acquired a valuable right and interest in it, and has exercised the same for upwards of twenty years; that its use has been recognized by the plaintiff and its predecessors in repeated business transactions; that a large part of its correspondence during this period has been under the abbreviated names of "Goodyear Rubber Company," "Goodyear's Rubber Manufacturing Company," or "Goodyear's Company," or other similar abbreviated title; that it registered a trademark in the name of Goodyear's Rubber Manufacturing Company, and for the purpose of protecting it filed a certificate of incorporation under that name in New York in March, 1873; and that its trustees and managers subsequently organized as a Corporation under that name in Connecticut. The answers also allege that the organizers of the plaintiff company, prior to 1873, had done business only under the name of "Rubber Clothing Company," or as F. M. & W. A. Sheppard, or as Sheppard & Dudley; that about January 1, 1873, for the purpose of injuring the defendant and appropriating its well known name and good will, and securing its business, they organized the plaintiff under the name of the Goodyear Rubber Company, against which the defendant protested; and that such action on the part of the plaintiff has caused a diversion of the business of the defendant and general interference with it.

As a separate defense the answers also set [602] forth various transactions of the plaintiff, which tended to show unfair and inequitable measures to divert to itself business from the defendant, Goodyear's India Rubber Glove Manufacturing Company, but it is not deemed important to

state them. That company also filed a cross bill to restrain the conduct of the plaintiff in that respect, and praying that damages might be decreed against it for its wrongful and inequitable acts. Replications having been filed to the several answers, proofs were taken, upon which the court below rendered a decree in favor of the plaintiff, perpetually enjoining the defendants from using or in any way employing the name Goodyear's Rubber Manufacturing Com-Company, or the name Goodyear Rubber Company, or any abbreviation thereof representing such integral name in their business, upon their signs, bills of merchandise, receipts, letters, products of their manufacture, or otherwise; and directing that the cross bill be dismissed. From the whole of that decree an appeal was taken to this court.

The proofs in the case show very clearly that Goodyear's India Rubber Glove Manufacturing Company had, as alleged in its answer, been for many years in the use of abbreviations in the designation of its Company, using sometimes a name similar to the corporate name of the plaintiff; and if any exclusive right to the abbreviated name were to follow from its protracted use, that right would seem to belong to that Company rather than to the plaintiff. But the name of "Goodyear Rubber Company" is not one capable of exclusive appropriation. "Goodyear Rubber" are terms descriptive of well known classes of goods produced by the process known as Goodyear's invention. Names which are thus descriptive of a class of goods cannot be exclusively appropriated by anyone. The addition of the word "Company" only indicates that parties have formed an association or partnership to deal in such goods, either to produce or to sell them. Thus parties united to produce or sell wine, or to raise cotton or grain, might style themselves Wine Company. Cotton Company, or Grain Company, but by such de-
[603] scription they would in no respect impair the equal right of others engaged in similar business to use similar designations, for the obvious reason that all persons have a right to deal in such articles, and to publish the fact to the world. Names of such articles cannot be adopted as trademarks, and be thereby appropriated to the exclusive right of any one; nor will the incorporation of a company in the name of an article of commerce, without other specification, create any exclusive right to the use of the name.

In *Del. & H. Canal Co.* v. *Clark*, 80 U. S. 13 Wall. 311 [20: 581], an attempt was made to appropriate the term "Lackawanna" to coal brought by the canal company from Lackawanna Valley in Pennsylvania. The coal sold by the defendant Clark was a different kind, but was brought from the same valley, and he designated it also as Lackawanna coal. To enjoin this use of this name the suit was brought. The court held that geographical names designating districts of country could not be thus appropriated exclusively, as they pointed only to the place of production, and not to the producer. "Could such phrases," said the court, "as 'Pennsylvania wheat,' 'Kentucky hemp,' 'Virginia tobacco,' or 'Sea Island cotton' be protected as trademarks; could anyone prevent all others from using them, or from selling articles produced in the districts they describe under those appellations, it would greatly embarrass trade and secure exclusive rights to individuals in that which is the common right of many." In reaching this conclusion the court considered the principles upon which the owner of a trademark is protected in its use, and held, that "The trademark must, either by itself or by association, point distinctively to the origin or ownership of the article to which it is applied. The reason of this is that unless it does, neither can he who first adopted it be injured by any appropriation or imitation of it by others, nor can the public be deceived." And again: "No one can claim protection for the exclusive use of a trademark or tradename which would practically give him a monopoly in the sale of any goods other than those produced or made by himself. If he could, the public would be injured rather than protected, for competition would be destroyed. Nor can a generic name, or a name merely descriptive [604
of an article of trade, of its qualities, ingredients, or characteristics, be employed as a trademark and the exclusive use of it be entitled to legal protection."

To the same purport is the decision in *Amoskeag Mfg. Co.* v. *Trainer*, 101 U. S. 51 [25:993]. There the court said: "The object of the trademark is to indicate, either by its own meaning or by association, the origin or ownership of the article to which it is applied. If it did not, it would serve no useful purpose, either to the manufacturer or to the public; it would afford no protection to either, against the sale of a spurious in place of the genuine article." See also *Amoskeag Mfg. Co.* v. *Spear*, 2 Sandf. 599; *Falkinburg* v. *Lucy*, 35 Cal. 52; *Choynski* v. *Cohen*, 39 Cal. 501; *Raggett* v. *Findlater*, L. R. 17 Eq. 29.

The designation Goodyear Rubber Company not being subject to exclusive appropriation, any use of terms of similar import, or any abbreviation of them, must be alike free to all persons.

The case at bar cannot be sustained as one to restrain unfair trade. Relief in such cases is granted only where the defendant, by his marks, signs, labels, or in other ways, represents to the public that the goods sold by him are those manufactured or produced by the plaintiff, thus palming off his goods for those of a different manufacture, to the injury of the plaintiff. *McLean* v. *Fleming*, 96 U. S. 245 [24: 828]; *Sawyer* v. *Horn*, 4 Hughes, 239; *Perry* v. *Truefitt*, 6 Beav. 66; *Croft* v. *Day*, 7 Beav. 84. There is no proof of any attempt of the defendant to represent the goods manufactured and sold by him as those manufactured and sold by the plaintiff; but on the contrary, the record shows a persistent effort on its part to call the attention of the public to its own manufactured goods, and the places where they are to be had, and that it had no connection with the plaintiff.

It follows that *the decree of the Circuit Court as to the original bill must be reversed* and the cause remanded, with instructions to dismiss that bill, with costs. No case was made out for relief to the plaintiff in the cross bill. The costs of the appeal are awarded to the appellants.

[605] ELON A. MARSH ET AL., *Appts.*,
v.
NICHOLS, SHEPARD AND COMPANY,
(A Corporation).

(See S. C. Reporter's ed. 605-616.)

Defects in letters patent—patent not signed, or signed after expiration of office—when may be shown—power of officer—suit before patent signed—patent how signed—defects how remedied—time may be proved—profits—Act of February 3, 1887.

1. The rule that a patent of the United States, for land or for an invention, can be attacked for defects, not apparent on its face, only by regular proceedings instituted for that purpose, and is not open to collateral attack, applies only to those cases where the patent has been executed and the authority of the officers to issue the same was complete.
2. It can always be shown, in a suit at law or in equity, that an instrument produced in evidence was never executed by the person whose signature it bears.
3. So it may be shown that a patent for an invention was never signed by the officers whose names are attached to it, or was not signed when they were in office, or at the time stated.
4. The power of an officer of the Patent Office to give effect to any of his acts is at an end when he goes out of office, and no efficacy can be given to them by antedating the patent, even though the act be the correction of a mere mistake or omission; if corrected at all, it must be by the officers in power at the time of the correction, who have succeeded to his authority.
5. The right of an inventor is created by the patent; he has no exclusive right and cannot bring a suit for infringement until he obtains a patent.
6. A patent for an invention must be signed by all the officers required by the statute (§ 4883, R. S.); such a patent issued without the signature of the Secretary of the Interior is inoperative to create any right.
7. The department has power to remedy such an omission; but it must be remedied by existing officers of the department not by former officers who have gone out of office; the signature of the acting Secretary of the Interior at the time is sufficient.
8. The time at which the execution of the patent was completed by the signature of the acting secretary may be proved; from that time only does the instrument operate as a patent for the invention claimed.
9. Until thus signed, the patent is entirely void, and no suit can be maintained upon it; and an action commenced before such signature should be dismissed.
10. An accounting for profits earned subsequently to the commencement of the suit can be demanded only where the infringement complained of took place before the suit was commenced and continued afterwards.
11. The Act of Congress of February 3, 1887, for the relief of the patentees in this case, and validating the letters patent, had no retroactive effect.

[No. 72.]

Argued Nov. 9, 1888. Decided Dec. 10, 1888.

APPEAL from a decree of the Circuit Court of the United States for the Eastern District of Michigan, dismissing a suit in equity for the infringement of a patent for an invention. *Affirmed.*

Cross appeal in the same case. *Dismissed.*

The facts are stated in the opinion.

Mr. **R. A. Parker**, for Marsh *et al.*:

Defendant could not impeach complainants' patent for the supposed irregularity in its signing and issue, it not being apparent on the face thereof, without pleading such defense.

Providence Rubber Co. v. *Goodyear*, 76 U. S. 9 Wall. 788 (19:566); *Giant Powder Co.* v. *Safety Nitro Powder Co.* 19 Fed. Rep. 509, 511; *Railway Reg. Mfg. Co.* v. *North Hudson etc. R. Co.* 23 Fed. Rep. 593; *Morehead* v. *Jonas*, 3 Wall. Jr. 306.

The patent in question being regular on its face, no evidence is competent to show that the signatures, seal or attestation of the issuing thereof was irregular, or to contradict the facts stated on its face, whether pleaded or not.

1 Greenl. Ev. 275, note; *Kavanaugh* v. *Day*, 10 R. I. 393; *Jamison* v. *Jamison*, 3 Wharf. 457, 469; *Ross* v. *McLung*, 31 U. S. 6 Pet. 283; (8:400); *Bruckner* v. *Lawrence*, 1 Doug. (Mich.) 30; *Stringer* v. *Young*, 28 U. S. 3 Pet. 320 (7:693); *Doughty* v. *West*, 6 Blatchf. 429; *Phil. & T. R. Co.* v. *Stimpson*, 39 U. S. 14 Pet. 448 (10:535); *Eureka C. W. Machine Co.* v. *Bailey W. & W. Machine Co.* 78 U. S. 11 Wall. 488, 492 (20:209, 211); *Railway Reg. Mfg. Co.* v. *North Hudson etc. R. Co.* 23 Fed. Rep. 593.

The signing by the Assistant Secretary of the Interior in legal effect was neither irregular nor invalid.

2 Bl. Com. 343; *U. S.* v. *Schurz*, 102 U. S. 378 (26:167); *Woodworth* v. *Hall*, 1 Wood. & M. 389; *Butterworth* v. *U. S.* 112 U. S. 50 (28:656); *Evans* v. *Jordan*, 1 Brock. 252; *Bell* v. *Hearne*, 60 U. S. 19 How. 252 (15:614); *Wilson* v. *Rousseau*, 45 U. S. 4 How. 646 (11:1141); *York & M. L. R. Co. Winans*, 58 U. S. 17 How. 30 (15:27).

The Act of Congress makes this patent valid from its original date, and cures all the irregularities.

Blanchard v. *Sprague*, 2 Story, 170; *Evans* v. *Eaton*, 16 U. S. 3 Wheat. 454 (4:433); *Evans* v. *Eaton*, 20 U. S. 7 Wheat. 356 (5:472); *Tilghman* v. *Proctor*, 102 U. S. 707 (26:279).

Remedial statutes enacted during the intervention of an appeal to this court will be followed by this court in its final action.

Watson v. *Mercer*, 33 U. S. 8 Pet. 88 (8:876); *Yeaton* v. *U. S.* 9 U. S. 5 Cranch. 281 (3:101); *Randall* v. *Kreiger*, 90 U. S. 23 Wall. 148 (23:126); Cooley, Const. Lim. and note 381; *Evans* v. *Eaton*, 1 Pet. C. C. 322; *Calder* v. *Bull*, 3 U. S. 3 Dall. 386 (1:648); *Ogden* v. *Saunders*, 25 U. S. 12 Wheat. 213 (6:606).

Defendant's cross appeal should be dismissed.

Agawam Woolen Co. v. *Jordan*, 74 U. S. 7 Wall. 583 (19:177); *Wise* v. *Allis*, 76 U. S. 9 Wall, 737 (19:784); *Cammeyer* v. *Newton*, 94 U. S. 225 (24:72); *Marsh* v. *Seymour*, 97 U. S. 348 (24.963); *Bates* v. *Coe*, 98 U. S. 31 (25:68); *Phila. W. & B. R. Co.* v. *Dubois*, 79 U. S. 12 Wall. 47 (20:265).

Objection to want of notice must be made before hearing.

Roemer v. *Simon*, 95 U. S. 214 (24:384); *Webster Loom Co.* v. *Higgins*, 105 U. S. 580 (26:1177).

Clearly anticipatory devices must cover the same combination of the same elements or their mechanical equivalents, combined in substantially the same manner, or having same mode of operation to produce the same results.

Gill v. *Wells*, 89 U. S. 22 Wall. 24 (22:710); *Bates* v. *Coe*, 98 U. S. 38-48 (25:70-74); *Cantrell* v. *Wallick*, 117 U. S. 689 (29:1017); *Cahoon* v. *Ring*, 1 Cliff. 620; *Werner* v. *King*, 96 U. S. 218 (24:613); *Re Herron*, 1 Off. Gaz. 608; *Webster Loom Co.* v. *Higgins*, *supra*.

An abandoned experiment does not form a part of the state of art.

Aultman v. *Holley*, 11 Blatchf. 317; *Agawam Woolen Co.* v. *Jordan, supra; Whittlesey* v. *Ames*, 9 Biss. 225.

Want of novelty must be established beyond a reasonable doubt.

Cantrell v. *Wallick, supra.*

Mr. **Charles F. Burton,** for Nichols, Shepard & Co.:

Assignment of Scott is no part of the record.

Fisher v. *Cockerell*, 30 U. S. 5 Pet. 248 (8:114); *Sargeant* v. *State Bank*, 53 U. S. 12 How. 371 (13: 1028); *England* v. *Gebhardt*, 112 U. S. 502 (28: 811).

The right to inquire into the patent is established.

Koehler v. *Black River Falls Iron Co.* 67 U. S. 2 Black, 715 (17: 339); *Bissell* v. *Spring Valley*, 110 U. S. 162 (28:105); *Anthony* v. *Jasper Co.* 101 U. S. 693 (25:1005).

It is not until the department has vested the inventor with his title, under a completed patent, that the inventor is in a position to assert any rights under the patent.

Gayler v. *Wilder*, 51 U. S. 10 How. 477 (13: 504); *Pontiac Knit Boot Co.* v. *Merino Shoe Co.* 31 Fed. Rep. 288; *Smith* v. *Goodyear Dental Vulcanite Co.* 93 U. S. 486 (23:952); *Emerson* v. *Lippert*, 31 Fed. Rep. 911; *Seibert Cylinder Oil Co.* v. *William Powell Co.* 35 Fed. Rep. 591.

Until the formalities prescribed by the statute are complied with, the franchise is not created.

McGarrahan v. *New Idria Mining Co.* 96 U. S. 316 (24:630); *Anthony* v. *Jasper Co.* 101 U. S. 693 (25:1005); *Goodman* v. *Randall*, 44 Conn. 321.

The right of an inventor to his invention, when secured by patent, is a franchise.

Jordan v. *Dayton*, 4 Ohio, 295; *Patterson* v. *Ky.* 97 U. S. 501 (24:1115).

A patent is more properly comparable to a process than to a title deed.

Moffitt v. *Garr*, 66 U. S. 1 Black, 273 (17:207); *Reedy* v. *Scott*, 90 U. S. 23 Wall. 352 (23:109); *Meyer* v. *Pritchard*, Book 23 U. S. L. ed. 961; *Peck* v. *Collins*, 103 U. S. 660 (26: 512).

It is a fatal defect in a process when it was not signed by a duly authorized officer.

Dwight v. *Merritt*, 4 Fed. Rep. 614.

A writ issued under a law requiring such process to be signed and sealed, is void unless sealed.

Ætna Ins. Co. v. *Hallock*, 73 U. S. 6 Wall. 556 (18:948).

The omission of one or the other of the requisites was held fatal in *Trigg* v. *Ross*, 35 Mo. 165; *Huggins* v. *Ketchum*, 4 Dev. & B. L. 414; *Boal* v. *King*, 6 Ohio, 11; *Porter* v. *Haskell*, 11 Maine, 177; *Hutchins* v. *Edson*, 1 N. H. 139; *Shackelford* v. *McRea*, 3 Hawks, 226; *Seawell* v. *Bank of Cape Fear*, 3 Dev. 279; and *Hernandez* v. *Drake*, 81 Ill. 34.

A writ of error has been held void if it lacked the seal or the signature.

Overton v. *Cheek*, 63 U. S. 22 How. 46 (16: 285); *Ins. Co.* v. *Mordecai*, 62 U. S. 21 How. 195 (16:94); *Porter* v. *Foley*, 62 U. S. 21 How. 393 (16:154); *Moulder* v. *Forrest*, Book 19 U. S. L. ed. 154; *Wells* v. *McGregor*, 80 U. S. 13 Wall. 188 (20: 538); *Germain* v. *Mason*, Book 20 U. S. L. ed. 689.

In writs of error to state courts the allowance by the proper authority must be had, or the court does not obtain jurisdiction.

Twitchell v. *Pa.* 74 U. S. 7 Wall. 321 (19:223); *Gleason* v. *Florida*, 76 U. S. 9 Wall. 779 (19: 730); *Bartemeyer* v. *Iowa*, 81 U. S. 14 Wall. 26 (20:792); *Packet Co.* v. *Ins. Co.* 20 U. S. L. ed. 463; *Palmer* v. *Donner*, 74 U. S. 7 Wall. 541 (19:99); *U. S.* v. *Hodge*, 44 U. S. 3 How. 534 (11:714); *Blitz* v. *Brown*, 74 U. S. 7 Wall. 693 (19:280).

An Act will not be construed to have a retrospective operation unless its language clearly requires such a construction.

Twenty Per Cent Cases, 87 U. S. 20 Wall. 179 (22:339).

Mr. Justice **Field** delivered the opinion of the court:

This is a suit in equity for the infringement of an alleged patent of the United States, which, it is averred, was obtained by the complainant Marsh and his assignee and cocomplainant, Lefever, for a new and useful improvement in steam-engine valve-gear, with a prayer that the defendant corporation may be required to account for and pay over to the complainants the profits acquired by it and damages sustained by them by its unlawful acts, and be enjoined from further infringement The bill sets forth that the alleged patent was obtained on the 28th day of December, 1880, and was in due form of law, under the seal of the Patent Office of the United States, signed by the Secretary of the Interior, countersigned by the Commissioner of Patents, and dated on that day and year. The answer of the defendant to these allegations is that it knows nothing of the issue of the patent, except as informed by the bill or by hearsay, and, therefore, neither admits nor denies them, but leaves the complainants to make such proofs thereof as they may deem advisable. A replication having been filed to the answer, proofs were taken, among which there was put in evidence an instrument in the form of a patent of the United States, purporting to be signed "A. Bell, Acting Secretary of the Interior," and countersigned and sealed as alleged in the bill. By stipulation of the parties certain facts were admitted with reference to this instrument, and allowed to be considered, "so far as relevant, competent, or material, on any motion or at any stage of the cause, including final hearing." The facts thus admitted were substantially these: That the instrument was received from the Patent Office by the complainants Marsh and Lefever (the parties named therein as patentees) on or about January 2, 1881, in all respects in the same condition as it now is, save that the words "A. Bell" were not thereon where they now appear; that the signature to it of E. M. Marble, Commissioner of Patents, and the seal of the Patent Office are genuine; that neither of the complainants nor their counsel knew of the omission of the signature of the Secretary of the Interior to the instrument, but supposed it was in all respects regular, their attention never having been called to the same until on or about February 12, 1882, long after the commencement of the present suit; that on or about February 17 following, it was sent by the solicitor of the complainants to the Patent Office at Washington, accompanied by a request of the

[606]

complainants Marsh and Lefever to have the mistake corrected; and that on or about February 24 it was returned to the solicitor signed "A. Bell, acting Secretary of the Interior," but without any other change.

A letter dated April 28, 1882, from E. M. Marble, who was the Commissioner of Patents when the instrument was issued, was also admitted in evidence. The letter set forth the various steps taken by Marsh and Lefever to obtain a patent for the invention claimed, and by the officers of the Patent Office in preparing, executing, and delivering it to them; and shows that every requirement of the law and of the [607] regulations of the Patent Office was complied with when the instrument was issued, except the affixing to it of the signature of the Acting Secretary of the Interior, and that its omission, as established by the history and record of the case, was purely accidental, and probably was caused by the instrument being inadvertently laid aside or withdrawn from before the Acting Secretary while he was engaged in signing patents.

The circuit court held that the signature of the Secretary of the Interior was essential to render the instrument operative as a patent of the United States for the invention claimed; that until thus signed it was not only a defective instrument, but was entirely void; and therefore that the suit could not be maintained; and it dismissed the bill. Its decree was entered on the 16th of April, 1883, and from it the complainants, on the 26th of February, 1885, took an appeal to this court. Subsequently, and on the third of February, 1887, Congress passed an Act for the relief of the patentees, reciting in its preamble the issue to them, on the 28th of December, 1880, of the letters patent mentioned in due form of procedure, except that by accident or mistake they were not signed by the Secretary of the Interior, and that they were signed by the then acting Secretary on February 24, 1882, and declaring as follows:

"That the letters patent named in the preamble of this Act are hereby, and by this Act, made legal, valid, complete, and operative, in law and equity, from the twenty-eighth day of December, eighteen hundred and eighty, to the same extent and for the same term that the same would have been legal, valid, complete, and operative if the signature of the Secretary of the Interior had, at the time of the supposed issue of said letters patent on the day aforesaid; been placed thereon, and the omission of said signature thereon had not occurred; *Provided, however*, That the provisions of this Act shall not be held or construed to apply to or affect any suits now pending, nor any cause of action arising prior to its passage." 24 Stat. at L. 378.

In support of their appeal the appellants now contend in substance as follows:

1st. That the defendant could not impeach the patent for the irregularity in its signing and issue, this not being apparent on its face, without pleading such defense and regularly putting the question in issue;

2d. That the patent being regular on its face, evidence to show that the signature was irregularly placed to it was incompetent;

3d. That the correction of the omission in the patent was within the power of the acting Secretary of the Interior at the time; that when the omission was thus remedied the patent was operative from its original date, or, at least, from the date of the correction, February 24, [610] 1882; and that the complainants were, even in this latter view, entitled to an accounting from that date;

4th. That if the patent did not become valid from its date on the subsequent signature by the acting Secretary of the Interior, then the Act of Congress of February 3, 1887, cured all irregularities in the signing of the patent, made it valid from its date, and must govern the decision in this court.

The first three positions may be considered together.

It is undoubtedly true as a general rule that a patent of the United States, whether for land or for an invention, can be attacked for defects, not apparent on its face, only by regular proceedings instituted for that purpose, and is not open to collateral attack, except where specially provided by statute. *Eureka C. W. Machine Co.* v. *Bailey W. & W. Machine Co.* 78 U. S. 11 Wall. 488, 492 [20: 209, 211]. But this rule applies only to those cases where the patent has been in fact executed, and the authority of the officers to issue the same was complete. In such cases the impeachment must be by pleadings setting up the specific acts which, it is alleged, vitiate and defeat the instrument. It is always open to show that an instrument produced in evidence, whether in an action at law or in a suit in equity in support of a claim or defense, was never executed by the person whose signature it bears, but that it is a simulated and forged document. And when the time of execution is material to the enforcement of the instrument, it is competent to show the date when the signature of the party was attached. Antedating cannot be used to cut off existing rights or defenses of third parties which would not be impaired or defeated if the true date was given. With respect to patents for land we have had frequent occasion to assert their inviolability against collateral attack, where the Land Department had jurisdiction, and the land formed part of the public domain, and the law provided for their sale. But we have also held that if the land patented was never the property of the United States, or had been previously sold, or reserved for sale, or the officers had no authority to execute the instrument, the fact could be shown in any action or proceeding whenever the patent is offered in evidence. *St. Louis Smelting & Ref.* [611] *Co.* v. *Kemp*, 104 U. S. 636, 641 [26: 875, 876]; *Steel* v. *St. Louis Smelting & Ref. Co.* 106 U. S. 447, 452, 453 [27: 226, 228]; *Mahn* v. *Harwood*, 112 U. S. 354, 358 [28: 665, 667]. And so also may the fact be shown, if the instrument itself was never signed by the officers whose names are attached to it, or when they were in office, or at the time stated. As was said in a case lately before this court, antedating by an agent after his power has been revoked, so as to bind his principal, partakes of the nature of forgery, and is always open to inquiry, no matter who relies upon it. *Anthony* v. *Jasper Co.* 101 U. S. 693, 698 [25: 1005, 1006]. The same doctrine applies when a patent is signed by an officer of the Patent Office, or Land Department, after he has gone out of office. His

power to give effect to his acts as an officer of the Government is then at an end, and no efficacy can be imparted by antedating them, even though the act be the correction of a mere mistake or omission. The mistake or omission must stand in the condition he left it so far as he is concerned, with all its consequences. If corrected at all, it must be by officers in power at the time of the correction, who have succeeded to his authority.

This doctrine has special force in its application to a patent for an invention. A patent for land has, in the legislation of Congress, a twofold operation. It conveys the title where previously that remained in the United States; but where issued upon the recognition and confirmation of a claim to a previously existing title it is evidence of record of the existence of that title, or of equities respecting the land requiring recognition by a quitclaim from the Government. It always imports that the Government conveys, or has previously conveyed, interests in the lands, something which it at the time owns, or its predecessor once owned. And by the proceedings previous to its issue there is created in the claimant an equitable right to the conveyance of the legal title, or his right to such title is so established that he can enforce it against others who, with notice of his claims, may have obtained the patent. *Langdeau* v. *Hanes*, 88 U. S. 21 Wall. 521, 529 [22: 606, 608]. But the patent for an invention conveys nothing which the Government owns [612] or its predecessors ever owned. The invention is the product of the inventor's brain, and if made known would be subject to the use of any one, if that use were not secured to him. Such security is afforded by the Act of Congress when his priority of invention is established before the officers of the Patent Office, and the patent is issued. The patent is the evidence of his exclusive right to the use of the invention; it therefore may be said to create a property interest in that invention. Until the patent is issued there is no property right in it, that is, no such right as the inventor can enforce. Until then there is no power over its use, which is one of the elements of a right of property in anything capable of ownership. In *Gayler* v. *Wilder*, 51 U. S. 10 How. 477, 493 [13: 504] this subject was to some extent considered, when the court, by *Chief Justice* Taney, said: "The inventor of a new and useful improvement certainly has no exclusive right to it until he obtains a patent. This right is created by the patent, and no suit can be maintained by the inventor against any one for using it before the patent is issued." And again: "The monopoly did not exist at common law, and the rights, therefore, which may be exercised under it cannot be regulated by the rules of the common law. It is created by the Act of Congress, and no rights can be acquired in it unless authorized by statute, and in the manner the statute prescribes."

Section 4883 of the Revised Statutes prescribes the manner in which patents for inventions shall be attested. It declares that "All patents shall be issued in the name of the United States of America, under the seal of the Patent Office, and shall be signed by the Secretary of the Interior and countersigned by the Commissioner of Patents, and they shall be recorded, together with the specifications, in the Patent Office in books to be kept for that purpose." The signatures of all the officers here named must be attached to the instrument, or it will be an uncompleted document, and therefore ineffectual to confer "the exclusive right to make, use, and vend the invention or discovery throughout the United States and the Territories thereof." The omission of one signature is no more permissible than the omission of all. On this point we have a pertinent adjudication in *McGarrahan* v. *New Idria Mining Company*, 96 U. S. 316 [24: 630]. There [613] the question arose as to the validity of an instrument as a patent for land of the United States, which had not been countersigned by the Recorder of the General Land Office. The law then in force respecting patents for land issued by the General Land Office provided that they should be issued in the name of the United States under the seal of said office, and be signed by the President of the United States, or by a secretary appointed by him for that purpose, and countersigned by the Recorder of the General Land Office, and be recorded in said office in books to be kept for that purpose; and the court held that the fact the instrument was not countersigned by the Recorder of the General Land Office was fatal to its validity, and that the instrument did not become operative as a patent until it was attested by all the parties named in the statute. Until then the United States had not executed a patent for a grant of lands. In deciding the case the court, by *Mr. Chief Justice* Waite, said: Each and every one of the integral parts of the execution is essential to the perfection of the patent. They are of equal importance under the law, and one cannot be dispensed with more than another. Neither is directory, but all are mandatory. The question is not what, in the absence of statutory regulations, would constitute a valid grant, but what the statute requires. Not what other statutes may prescribe, but what this does. Neither the signing nor the sealing nor the countersigning can be omitted, any more than the signing or the sealing or the acknowledgment by a grantor, or the attestation by witnesses, when, by statute, such forms are prescribed for the due execution of deeds by private parties for the conveyance of lands. It has never been doubted that in such cases the omission of any of the statutory requirements invalidates the deed. The legal title to lands cannot be conveyed except in the form provided by law."

This decision is as applicable to a patent for an invention as it is to a patent for lands, and in accordance with it the instrument issued to the complainants Marsh and Lefever for the invention they claim was not, at the time it was issued, by reason of the absence of the signature of the Secretary of the Interior, operative [614] to create any right in them. But though the instrument was thus inoperative, they were not barred from aftewards obtaining a correction of it so as to render it effective as a patent, to which they had become entitled. Where mistakes are committed by officers of the Land Department in issuing evidence of a claimant's rights, not amounting to errors of judgment in the exercise of judicial discretion, but which are the result of accident or inadvertence, they

may be remedied upon proper application to the Department. We have an instance of such action in the case of *Bell* v. *Hearne*, 60 U. S. 19 How. 252 [15:614]. It there appeared that a patent for land was issued to one James Bell, whilst the records of the office showed that one John Bell was the applicant, and the party entitled to it. Some years after it was received by James Bell, he returned it to the General Land Office, and upon an examination of the records of the Department, and being satisfied therefrom of the original mistake in the designation of the first name of the party entitled to the patent, the Commissioner of the General Land Office canceled the original patent and issued a new one to John Bell; and the question before the court was as to the power of the Commissioner to receive the original patent and to issue a new one, upon which question the court said: "The Commissioner of the General Land Office exercises a general superintendence over the subordinate officers of his department, and is clothed with liberal powers of control, to be exercised for the purposes of justice, and to prevent the consequences of inadvertence, irregularity, mistake, and fraud in the important and extensive operations of that officer for the disposal of the public domain. The power exercised in this case is a power to correct a clerical mistake, the existence of which is shown plainly by the record, and is a necessary power in the administration of every department."

It is true the omission of the signature of the acting Secretary of the Interior to the instrument issued to the complainants Marsh and Lefever was not a mere clerical error, but an omission of a signature essential to the creation of the instrument as a patent, being in that [615] respect like the omission of a grantor's name to a deed. A clerical error, as its designation imports, is an error of a clerk or a subordinate officer in transcribing or entering an official proceeding ordered by another. But we have no doubt that the power of the Department to prevent the consequences of inadvertences and mistakes in its officers extends so far as to remedy an omission like the one under consideration. The manner of affording the remedy is the only question in such cases. Clearly, it must be by the action of existing officers of the Department, not by former officers, who have gone out of office. Mr. Schurz, who was Secretary of the Interior when the instrument in question was issued, could not have supplied the omission by signing the document when it was returned to the Department for that purpose in February, 1882, for he was then no longer in office. Mr. Kirkwood had succeeded him as Secretary, and was then in office. He could undoubtedly have taken up the application of the complainants Marsh and Lefever, and having found upon examination that they were entitled, by proceedings and proofs already had in the Department, to the patent, have signed the instrument and delivered it to them in a perfected form. This official duty, however, appears to have been performed by Mr. Bell, who was acting Secretary under him, as he had been under Secretary Schurz. The omission in the instrument as originally issued was thus supplied. The Revised Statutes (§ 177) provide that in the case of the death, resignation, absence, or sickness of the head of any Department, the first or sole assistant thereof shall, except in certain cases referred to (not material here), perform the duties of such head until a successor is appointed or such absence or sickness shall cease. The signing of the instrument by Mr. Bell as acting Secretary implies that one of the conditions on which he was authorized to act in that capacity had arisen. With his signature added the instrument was complete. No other signature was required, the same person who signed it as Commissioner of Patents still continuing in office. The only embarrassment from completing the instrument in this way arises from its date. The signature, which completed its execution, was attached February 24, 1882, whilst its date is December 28, 1880, more than [616] thirteen months before. The statute declares that "every patent shall bear date as of a day not later than six months from the time at which it was passed and allowed and notice thereof was sent to the applicant or his agent." R. S. § 4885. This provision was intended to prescribe the date on which the patent would begin to run; but should any question arise in the future as to the duration of this patent, the time at which its execution was completed by the signature of the acting Sectretary may be proved. It would have been well if the date of the signing had been added to his signature, or in some way indicated on the instrument itself, so that it might have gone upon the records of the Patent Office; as from that time only could the instrument operate as a patent for the invention claimed, unless greater efficacy was imparted to it by the Act of Congress, which we shall presently consider.

The position that an accounting for profits earned subsequently could be claimed in this suit is not tenable. An accounting for such profits after suit can be demanded only where the infringement complained of took place previously and continued afterwards.

As to the Act of Congress passed February 3, 1887, for the relief of the appellants, only a few words need be said. It may be conceded that the defect arising from the omission of the Secretary's signature to the instrument is cured as to the future by that Act, but it contains a proviso which excepts its provisions from applying to or affecting any suits then pending, or any cause of action arising prior to its passage. It is evident that Congress did not intend to give to the Act any retroactive effect, and to prevent such a construction inserted the proviso, thus limiting the extent of its operation. *Wayman* v. *Southard*, 23 U. S. 10 Wheat. 1, 30 [6:253]. As thus limited, the Act, as well observed by counsel, is in harmony with the law relating to reissues, allowing the inventor upon the surrender of his patent with a defective specification to have a new patent for the remainder of his term.

For the reasons expressed it follows that the decree below must be affirmed; and the cross appeal, being from rulings in the exclusion of evidence offered with respect to the alleged infringement, must be dismissed; and it is so ordered.

[586]

ELIAB W. METCALF, *Plff. in Err.*, v. THE CITY OF WATERTOWN.

(See S. C. Reporter's ed. 586-590.)

Jurisdiction—action on judgment—right of assignee to sue—citizenship must appear—circuit court jurisdiction—federal question—dismissing suit.

1. Whether the court, whose judgment has been brought here for review, had or had not jurisdiction, is a question which this court must examine and determine, even if the parties forbear to make it, or consent that the case be considered upon its merits.

2. A suit founded on a judgment is one founded on contract within the meaning of the Act of March 3, 1875 (18 Stat. at L. 470, chap. 137), determining the jurisdiction of the Circuit Courts of the United States. By the terms of said Act, the right of the assignee of such judgment to sue in the circuit court depends upon the right of his assignors to have brought suit in that court, if no assignment had been made.

3. It is fatal to the jurisdiction of the circuit court, so far as its jurisdiction depends upon the above statute, that it nowhere appears in the record of what State the plaintiff's assignors were citizens when the action on such judgment was commenced, and that it is consistent with the record that they were, at that time, citizens of the same State with the defendant.

4. The jurisdiction of the circuit court cannot be maintained, upon the theory that such suit is one arising under the Constitution or laws of the United States, from the fact that it was brought to recover the amount of a judgment of a court of the United States. That fact does not, of itself, make it a suit of that character.

5. Where the original jurisdiction of a Circuit Court of the United States is invoked upon the sole ground that the determination of the suit depends upon some question of a federal nature, it must appear, at the outset, from the declaration or the bill of the party suing, that the suit is of that character.

6. If it does not so appear, then the court, upon demurrer, or motion, or upon its own inspection of the pleading, must dismiss the suit; it cannot retain it in order to see whether the defendant may not raise some question of a federal nature upon which the right of recovery will finally depend; and if so retained, the want of jurisdiction at the commencement of the suit is not cured by an answer or plea which may suggest a question of that kind.

7. Where the case, as presented by the record, is one in respect to which the plaintiff could not, under the Act of 1875, invoke the original jurisdiction of the circuit court and the judgment is reversed and the cause remanded, it will be for the court below to determine whether the pleadings can be so amended as to present a case within its jurisdiction.

[No. 90.]

Argued Nov. 20, 21, 1888. Decided Dec. 10, 1888.

IN ERROR to the Circuit Court of the United States for the Western District of Wisconsin, to review a judgment in favor of defendant, in an action upon a judgment of a Circuit Court of the United States, brought by an assignee of such judgment. *Reversed.*

The facts are stated in the opinion.

Mr. **Charles E. Monroe**, for plaintiff in error.

Messrs. **George W. Bird** and **Daniel Hall**, for defendant in error.

Mr. Justice **Harlan** delivered the opinion of the court:

This action was brought in the court below in the year 1883, to recover the sum of $10,207.86, the amount of a judgment rendered May 8, 1866, in the Circuit Court of the United States for the District of Wisconsin, in favor of Pitkin C. Wright, against the City of Watertown, a municipal corporation of that State. The plaintiff in the present action, E. W. Metcalf, is a citizen of Ohio, and sues as assignee of certain named persons who became, under assignments from Wright in 1873, the owners, in different proportions, of that judgment.

Although the question of the jurisdiction of the circuit court over the present suit was suggested at the bar, the case was argued entirely with reference to the construction and effect of the statute of Wisconsin, prescribing, in respect to causes of action accruing before November 1, 1878, ten years as the period within which must be commenced "an action upon a judgment or decree of any court of record of any State or Territory within the United States, or of any court of the United States," while twenty years was fixed, by the same statute, for the commencement of "an action upon a judgment or decree of any court of record of this [that] State." The court below held the suit to be barred by the limitation of ten years. Rev. Stat. Wis. 1858, chap. 138, §§ 1, 14, 15, 16; Id. 1878. We are not, however, at liberty to express any opinion upon the question of limitation, if the court, whose judgment has been brought here for review, does not appear, from the record, to have had jurisdiction of the case. And whether that court had or had not jurisdiction is a question which we must examine and determine, even if the parties forbear to make it, or consent that the case be considered upon its merits. *Mansfield, C. & L. M. R. Co.* v. *Swan*, 111 U. S. 379, 382 [28:462, 463]; *King Bridge Co.* v. *Otoe Co.* 120 U. S. 225 [30:628]; *Blacklock* v. *Small*, 127 U. S. 96, 105 [*ante*, 70, 73]; *Cameron* v. *Hodges*, 127 U. S. 322, 326 [*ante*, 132, 134].

[587]

By the Act of March 3, 1875 (18 Stat. at L. 470, chap. 137), determining the jurisdiction of the Circuit Courts of the United States, it is provided that no Circuit or District Court of the United States shall "have cognizance of any suit founded on contract in favor of an assignee, unless a suit might have been prosecuted in such court to recover thereon if no assignment had been made, except in cases of promissory notes negotiable by the law merchant and bills of exchange." This suit certainly does not belong to the excepted class, and, being founded on the original judgment against the City, is one "founded on contract" within the meaning of the Act. By the very terms, therefore, of the statute, Metcalf's right to sue in the circuit court depends upon the right of his assignors to have brought the suit in that court, if no assignment had been made. This view is fatal to the jurisdiction of that court, so far as its jurisdiction depends upon the above provision of the statute, because it nowhere appears in the record of what State the plaintiff's assignors were citizens when this action was commenced; indeed, it is consistent with the record that they were at that time, citizens of the same State with the defendant. *Walker* v. *Powers*, 104 U. S. 245, 248 [26: 729, 730]; *Continental Ins. Co.* v. *Rhoads*, 119 U. S. 237, 239 [30: 380]; *Peper* v. *Fordyce*, 119 U. S. 469, 471 [30:485]; *Everhart* v. *Huntsville Col.*

[588]

lege, 120 U. S 223 [30: 623]; *Menard* v. *Goggan*, 121 U. S. 253 [30: 914]; and the cases before cited.

Nor can the jurisdiction of the circuit court be maintained upon the theory that the suit is one arising under the Constitution or laws of the United States. The fact that it was brought to recover the amount of a judgment of a court of the United States, does not, of itself, make it a suit of that character; for the plaintiff, without raising by his complaint any distinct question of a federal nature, and without indicating, by proper averment, how the determination of any question of that character is involved in the case, seeks to enforce an ordinary right of property, by suing upon the judgment merely as a security of record, showing a debt due from the City of Watertown. *Provident Sav. L. Assur Soc.* v. *Ford*, 114 U. S. 635, 641 [29: 261, 263]. The plaintiff, it is true, contends that the limitation of ten years could not, consistently with the Constitution of the United States, be applied to an action upon a judgment or decree of a court of the United States, when a longer period was given within which to sue upon a judgment or decree of a court of record established by the laws of Wisconsin. And if the plaintiff properly invoked the original jurisdiction of the Circuit Court of the United States, in respect to the cause of action set out in his complaint, the question of limitation, under one construction of the local statute, would be decisive in the case. But is the present suit, therefore, one arising under the Constitution or the laws of the United States, within the meaning of the Act of 1875? We think not.

It has been often decided by this court that [589] a suit may be said to arise under the Constitution or laws of the United States, within the meaning of that Act, even where the federal question upon which it depends is raised, for the first time in the suit, by the answer or plea of the defendant. But these were removal cases, in each of which the grounds of federal jurisdiction were disclosed either in the pleadings, or in the petition or affidavit for removal; in other words, the case, at the time the jurisdiction of the Circuit Court of the United States attached, by removal, clearly presented a question or questions of a federal nature. *New Orleans, M. & T. R. Co.* v. *Miss.* 102 U. S. 135, 140 [26: 96, 98]; *Ames* v. *Kansas*, 111 U. S. 449, 462 [28: 482, 487]; *Pacific R. Removal Cases*, 115 U. S. 1, 11 [29: 319, 322]; *Southern Pac. R. Co.* v. *Cal.* 118 U. S. 109, 112 [30: 103, 104]. Besides the right of removal under the Act of 1875 could not be made to depend upon a preliminary inquiry as to whether the plaintiff had or had not the right to sue in the State court of original jurisdiction from which it was sought to remove the suit. Where, however, the original jurisdiction of a Circuit Court of the United States is invoked upon the sole ground that the determination of the suit depends upon some question of a federal nature, it must appear, at the outset, from the declaration or the bill of the party suing, that the suit is of that character; in other words, it must appear, in that class of cases, that the suit was one of which the circuit court at the time its jurisdiction is invoked, could properly take cognizance. If it does not so appear, then the court, upon demurrer, or motion, or upon its own inspection of the pleading, must dismiss the suit; just as it would remand to the State court a suit which the record, at the time of removal, failed to show was within the jurisdiction of the circuit court. It cannot retain it in order to see whether the defendant may not raise some question of a federal nature upon which the right of recovery will finally depend; and if so retained, the want of jurisdiction at the commencement of the suit is not cured by an answer or plea which may suggest a question of that kind. If the City had not answered in the present suit, and judgment by default had been rendered against it, this court, upon writ of error, would have been compelled to reverse the judgment, upon the ground that the record did not show jurisdic- [590] tion in the circuit court.

It results that, from any view of the case, as presented by the record, it is one in respect to which the plaintiff could not, under the Act of 1875, invoke the original jurisdiction of the circuit court. *The judgment must, therefore, be reversed* and the cause remanded with directions for such further proceedings as may be consistent with law, the plaintiff in error to pay the costs in this court. It will be for the court below to determine whether the pleadings can be so amended as to present a case within its jurisdiction. *King Bridge Co.* v. *Otoe Co* 120 U. S. 225, 227 [30: 623, 624]; *Menard* v. *Goggan*, 121 U. S. 253 [30; 914] *Reversed.*

THOMAS WALSTON ET AL., *Plffs. in Errr.*, [578]
v.
JOSEPH NEVIN ET AL.

JOHN G. ROACH ET AL., *Pffs. in Errr.*,
v.
SAME.

(See S. C. Reporter's ed. 578-582.)

Motions to dismiss and affirm—Kentucky Statute—constitutionality of tax law—due process of law—equal protection.

1. On motions to dismiss and affirm, this court only requires the printing of so much of the record as will enable it to act understandingly without referring to the transcript.

2. The Kentucky Statute of 1882, to amend the charter of the City of Louisville, so far as it authorizes the cost of the improvements of streets to be assessed against the owners of lots and gives a lien thereon, is not in conflict with section 1 of the Fourteenth Amendment to the Constitution of the United States, as amounting to a deprivation of property without due process of law, and a denial of the equal protection of the laws.

3. Whenever by the laws of a State, or by state authority, a tax is imposed upon property for the public use, and those laws provide for a mode of contesting the charge thus imposed, in the ordinary courts of justice, with such notice to the person, or such proceeding in regard to the property, as is appropriate to the nature of the case, the judgment in such proceedings cannot be said to deprive the owner of his property without due process of law.

4. The determination of the taxing district and the manner of the apportionment are all within the legislative power.

5. Whenever the law operates alike upon all persons and property, similarly situated, equal protection cannot be said to be denied.

6. As the question raised in these cases is a federal question, this court will not sustain the motions to dismiss, but, as there was color for those motions, and the contention now made has been often determined adversely, so that the rule must be regarded as settled, the motions to affirm are granted.

[Nos. 1129, 1160.]

Submitted Nov. 26, 1888. Decided Dec. 10, 1888.

IN ERROR to the Court of Appeals of Kentucky, to review a judgment directing the enforcement of a lien for an assessment for a local improvement in the City of Louisville.

On motions to dismiss, united with motions to affirm. *Motions to dismiss denied. Motions to affirm granted.*

The facts are stated by the court.

Messrs. **H. M. Lane** and **J. K. Goodloe**, for defendants in error, in support of motions:

Under the provisions of the Act in question, no tax is authorized to be levied except upon the terms of equality and for a public purpose.

Vol. I. p. 990, Sess. Acts 1881-2, Kentucky Legislature; *Preston* v. *Roberts*, 12 Bush, 570, 585; *Beck* v. *Obst*, Id. 268; *Schmelz* v. *Giles*, Id. 491.

Under the provisions of this Act, no tax or burden imposed can be coercively collected until the party taxed has been afforded a full and fair opportunity, on notice to him, and in the due course of judicial proceeding, to be heard as to the regularity and legality of every step and act taken by the local authorities in the imposition of the burden or tax, as to the justice and equality of the tax, as to the plan of the apportionment, the formation of the tax district, and as to the compliance by the local authorities with every term and condition upon which their power to impose a tax or burden is made to depend by the organic law of the City of Louisville. This is due process of law.

Vol. I. p. 990, Sess. Acts 1881-2, Kentucky Legislature; *Preston* v. *Roberts, supra; Davidson* v. *N. O.* 96 U. S. 97 (24: 616); *Hagar* v. *Reclamation Dist. No. 108*, 111 U. S. 701 (28: 569); *Mobile Co.* v. *Kimball*, 102 U. S. 691 (26: 238); *Kelly* v. *Pittsburgh*, 104 U. S. 78 (26: 658); *McMillen* v. *Anderson*, 95 U. S. 37 (24: 335); *Wurts* v. *Hoagland*, 114 U. S. 606 (29: 229).

Section 1 of article 14 of the Amendments to the Constitution of the United States imposes no restriction on the power of the Legislature to define and create a tax district, and to lay taxes upon the property in such district in aid of a local public improvement, and to apportion such burden or taxes.

U. S. v. *Memphis*, 97 U. S. 284 (24: 937); *Laramie Co.* v. *Albany Co.* 92 U. S. 307 (23: 552); *Mobile Co.* v. *Kimball*, 102 U. S. 691 (26: 238); *Pearson* v. *Zable*, 78 Ky. 173; Burroughs, Taxn. 446; Cooley, Taxn. 110; *Shelby Co. Judge* v. *Shelby R. Co.* 5 Bush, 225; *People* v. *Brooklyn*, 4 N. Y. 420; *Burnett* v. *Sacramento*, 12 Cal. 76; *Lexington* v. *McQuillan*, 9 Dana, 513; *Dorgan* v. *Boston*, 12 Allen, 223; *Nichols* v. *Bridgeport*, 23 Conn. 189; *Bridgeport* v. *New York & N. H. R. Co.* 36 Conn. 255; *Howell* v. *Buffalo*, 37 N. Y. 267; *Hingham & Q. Bridge & Turnp. Co.* v. *Norfolk Co.* 6 Allen, 353; *Challiss* v. *Parker*, 11 Kan. 394; *Malchus* v. *Highlands Dist.* 4 Bush, 547; *Scovill* v. *Cleveland*, 1 Ohio St. 126; *Hill* v. *Higdon*, 5 Ohio St. 243; *Langhorne* v. *Robinson*, 20 Gratt. 661; *Shaw* v. *Dennis*, 10 Ill. 405; *People* v. *Richmond Co.* 20 N. Y. 252.

Mr. **B. F. Buckner**, for plaintiffs in error, opposed submission of motions because records were not printed.

Mr. Chief Justice **Fuller** delivered the opinion of the court: [579]

Judgment was rendered in the Louisville Chancery Court in favor of the defendants in error in the first of the above named causes, directing the enforcement of a lien given by a statute of the Commonwealth of Kentucky, approved March 24, 1882, entitled "An Act to Amend the Charter of the City of Louisville," by a sale of certain lots in the City of Louisville owned by plaintiffs in error, to pay the amounts assessed against such lots for a local improvement, and, upon appeal, was affirmed by the Court of Appeals of Kentucky.

In the second case, which arose upon another local improvement, but involves the same questions here, the Louisville Chancery Court denied the defendants in error relief because in its opinion the proceedings for the improvement had not been properly taken; but the court of appeals reversed the judgment of the chancellor and remanded the cause, "with directions to enforce the lien, and for proceedings consistent with the opinion herein, which is ordered to be certified to said court."

Writs of error were thereupon prosecuted to this court, to dismiss which motions are now made, united with motions to affirm under the rule.

A preliminary objection is raised that defendants in error should have caused the entire record to be printed. But we only require the printing of so much of the record as will enable us to act understandingly without referring to the transcript; and if, in the judgment of counsel opposing the motions, more in that respect was needed, he might have made such specific reference thereto as would have enabled counsel for the moving parties to have supplied it. As the cases stand, we have apparently been furnished with quite enough for the disposition of the questions involved. The parts of the statute necessary to be considered upon these motions are as follows:

"Sec. 1. Public ways as used in this Act shall mean all public streets, alleys, sidewalks, roads, lanes, avenues, highways and thoroughfares, and shall be under the exclusive management and control of said city, with power to improve them by original construction and reconstruction thereof, as may be prescribed by ordinance. [580] Improvements as applied to public ways shall mean all work and material used upon them in the construction and reconstruction thereof, and shall be made and done as may be prescribed either by ordinance or contract, approved by the general council.

"Sec. 2. When the improvement is the original construction of any street, road, lane, alley, or avenue, such improvement shall be made at the exclusive costs of the owners of lots in each fourth of a square, to be equally apportioned by the general council according to the number of square feet owned by them respectively, except that corner lots (say thirty feet front and extending back as may be prescribed by ordinance) shall pay twenty-five per cent

more than others for such improvements. Each subdivision of territory bounded on all sides by principal streets shall be deemed a square. When the territory contiguous to any public way is not defined into squares by principal streets, the ordinance providing for the improvement of such public way shall state the depth on both sides fronting said improvement to be assessed for the cost of making the same according to the number of square feet owned by the parties respectively within the depth as set out in the ordinance. A lien shall exist for the cost of original improvement of public ways . . . for the apportionment and interest thereon, at the rate of six per cent per annum against the respective lots, and payments may be enforced upon the property bound therefor by proceedings in court; and no error in the proceedings of the general council shall exempt from payment after the work has been done as required by either the ordinance or contract; but the general council, or the courts in which suits may be pending, shall make all corrections, rules, and orders to do justice to all parties concerned. . .

"Sec. 4. . . When improvements in public ways have been made . . . and the contract therefor completed, the city engineer shall, by one insertion in one of the daily newspapers published in Louisville, give notice of the time [581] and place fixed for the inspection and reception of the work by the city engineer or either of his assistants or deputies, and such owners, their agents and representatives, may appear and be heard before such engineer, his assistant or deputy, as to whether such improvements have been made in accordance with the ordinance authorizing the same and the contract therefor."

Session Laws, 1881-2, Vol. 1, p. 990.

In accordance with the provisions of this Act the local improvements in question were made, and warrants issued for the sums apportioned against each of the lots belonging to plaintiffs in error as their share of the cost, to Joseph Nevin, the contractor, one of the defendants in error, who assigned them to Samuel B. Richardson, the other, and they brought the actions.

The plaintiffs in error set up in their pleadings, and insisted in the trial court, that the Act of the General Assembly, so far as it authorized the cost of the improvements of streets and other ways to be assessed against the owners of lots and gave a lien thereon, in the manner therein provided, and all the proceedings thereunder, were in conflict with section 1 of the Fourteenth Amendment to the Constitution of the United States, as amounting to a deprivation of property without due process of law and a denial of the equal protection of the laws.

The statute has been repeatedly before the Kentucky Court of Appeals, which has sustained it as constitutional and proper legislation, the powers vested thereby in the local government being subjected to the supervision of the courts, "where the particular facts in each case can be examined, and the controversy determined by those rules and principles which have always governed courts in dealing with questions of assessment and taxation." *Preston* v. *Roberts*, 12 Bush, 587; *Beck* v. *Obst*, Id. 268; *Broadway Baptist Church* v. *McAtee*, 8 Bush, 516. Unjust, unequal or arbitrary burdens are not authorized to be imposed by the terms of the Act, and opportunity is given to every party interested to be heard in opposition to the enforcement of the liability in the courts, which are specifically authorized to "make all corrections, rules, and orders to do justice to all parties concerned."

In *Davidson* v. *New Orleans*, 96 U. S. 104 [24: [582] 619], it was held by this court, *Mr. Justice* Miller delivering the opinion, "that whenever, by the laws of a State, or by state authority, a tax, assessment, servitude, or other burden is imposed upon property for the public use, whether it be for the whole State or of some more limited portion of the community, and those laws provide for a mode of confirming or contesting the charge thus imposed, in the ordinary courts of justice, with such notice to the person, or such proceeding in regard to the property as is appropriate to the nature of the case, the judgment in such proceedings cannot be said to deprive the owner of his property without due process of law, however obnoxious it may be to other objections . . . It is not possible to hold that a party has, without due process of law, been deprived of his property, when, as regards the issues affecting it, he has, by the laws of the State, a fair trial in a court of justice, according to the modes of proceeding applicable to such a case." And the conclusion was reached that neither the corporate agency by which the work is done, the excessive price which the statute allows therefor, nor the relative importance of the work to the value of the land assessed, nor the fact that the assessment is made before the work is done, nor that the assessment is unequal as regards the benefits conferred, nor that personal judgments are rendered for the amount assessed, are matters in which the state authorities are controlled by the Federal Constitution. So the determination of the taxing district and the manner of the apportionment are all within the legislative power. *Spencer* v. *Merchant*, 125 U. S. 345 [31: 763]; *Stanley* v. *Albany Co.* 121 U. S. 550 [30: 1003]; *Mobile Co.* v. *Kimball*, 102 U. S. 691 [26: 238]; *Hagar* v. *Reclamation District No.* 108, 111 U. S. 701 [28: 569]; *U. S.* v. *Memphis*, 97 U.S. 284 [24: 937]; *Laramie Co.* v. *Albany Co.* 92 U. S. 307 [23: 552]. And whenever the law operates alike on all persons and property, similarly situated, equal protection cannot be said to be denied. *Wurts* v. *Hoagland*, 114 U. S. 606 [29: 229]; *Richmond, F. & P. R. Co.* v. *Richmond*, 96 U. S. 529 [24: 737]. The remedy for abuse is in the state courts; for, in the language of *Mr. Justice* Field in *Mobile Co.* v. *Kimball*, "This court is not the harbor in which the people of a city or [583] county can find a refuge from ill advised, unequal, and oppressive state legislation."

As the question raised in these cases is a federal question (Spencer *v.* Merchant, supra), *we will not sustain the motions to dismiss; but as there was, in our judgment, color for those motions, and the contention now made has often been pressed upon our attention before, and as often determined adversely, so that the rule must be regarded as settled, we shall grant the motions to affirm. Affirmed.*

[617] BERNARD CALLAGHAN ET AL., *Appts.*,
v.
EUGENE B. MYERS.

(See S. C. Reporter's ed. 617-667.)

Reporter's copyright—conditions—presumption—deposit of title and work—evidence—clerk's certificate—publication—delivery—consecutive order—immaterial variances—proof of transfer of title—acquiescence and laches—infringement, what facts establish—books and papers—damages—stereotyping—salaries—credit for copies not sold—sales of second hand volumes—profits, rule as to—on the whole book—matters of fact.

1. The reporter of a volume of law reports can, in the absence of a prohibitory statute, obtain a copyright for the volume as an author; and such copyright will cover the parts of the book of which he is the author, although he has no exclusive right in the judicial opinions published or the work done by the judges, and although he is a public officer and receives a salary or compensation from the State.

2. The three conditions prescribed by the statute, namely: the deposit before publication of the printed copy of the title of the book, the giving of information of the copyright, by the insertion of the notice on the title page or the next page, and the depositing of a copy of the book within three months after the publication, are conditions precedent to the perfection of the copyright.

3. In the absence of evidence to the contrary, it will be presumed that the deposit of the title was made before publication, and also that where the work purports to have been deposited within three months after the date of the deposit of the title, it was deposited within three months after publication.

4. It will be equally presumed, in the absence of evidence to the contrary, that the deposit of the work, though made on the same day with the deposit of the title, was not made prior to publication.

5. Although it is to be presumed that the title was deposited before publication, yet, where the work was deposited five months and five days after the deposit of the title, it cannot be presumed that such deposit of the work was made within three months after the publication.

6. A copy of the title as deposited and recorded, under the seal of the court, given by the clerk to the author or proprietor who deposits it, is sufficient *prima facie* evidence of the deposit of the title.

7. The memorandum in the present case, of the fact and date of the deposit of the work, purporting to be signed by the clerk, is sufficient *prima facie* certificate of such deposit, and competent evidence of the fact and of the date, without further proof of the signature of the clerk, it being on the same paper with his signature as clerk to the certificate of the deposit of the title; but it was open to the defendants to show that his signature to the memorandum was not genuine.

8. The delivery of the copies of the volume to the Secretary of State, for the use of the State, as required by the Illinois Statute, is a publication of the volume; and where the deposit of it in the clerk's office did not take place until three months and fifteen days after such publication, the deposit of the work was not made in time, and the copyright fails.

9. Where copies of the volume were delivered and the title and the work were both of them deposited on the same day, it must be presumed, in the absence of evidence to the contrary, that the deposit of the title preceded the publication, and that the delivery of the copies to the Secretary of State preceded the deposit of the work in the clerk's office.

10. Where the three things are prescribed by the statute to be done in consecutive order, and all three appear to have been done on the same day, it will be presumed that the statute was complied with, leaving the *prima facie* evidence open to be rebutted.

11. Where the title was deposited January 28, 1867, and the notice printed in the volume purports to show that the copyright was entered in *1866*, the variance was held immaterial as causing no injury.

12. Where the certificate of the clerk shows that the printed title was deposited by "E. B. Myers & Chandler" and the printed notice of the entry of copyright in the volume as published purports to show that the copyright was entered by E. B. Myers alone, the variance was immaterial.

13. While, after the obtaining of a copyright, a written assignment may be necessary to convey title to it, or a written license to give a right to reproduce copies of the copyrighted book, one may become the owner by a parol transfer of whatever right the author, prior to the taking of the copyright, had to convey.

14. Parol evidence that the plaintiff owned the copyright at the time the infringements were committed, introduced without objection, was sufficient *prima facie* evidence of title until rebutted.

15. Upon the evidence, *held*, that the plaintiff did not consent to the republication of the volumes by the defendant; that he never abandoned his copyrights, or consented to surrender them without consideration; that he never acquiesced in any infringement of his copyrights by the defendants; and that he was not guilty of laches in seeking relief. That defendants recognized his copyrights, by offering to purchase them, is inconsistent with consent and abandonment.

16. The following facts, to wit: That, although Volumes 32 to 38 of the Illinois Reports as edited by defendants are condensed from the volumes of the original reporter belonging to plaintiff, yet the paging of the cases in both editions is the same; that the list of cases which precedes each report is the same; that it appears by comparison that all the volumes of the original reporter were used throughout in editing and annotating defendants' volumes; that words and sentences were copied without change or changed only in form; that although there appears to be independent labor by defendants' editors, yet, for a large portion of the work performed by them, they did not resort to original sources, but obtained their information from plaintiff's volumes; that, although the head notes of the two editions differ, yet, it is apparent that the head notes of plaintiff's volumes have been freely used in the preparation of the head notes of defendants' volumes, *held*, to establish, under the circumstances of this case, that the defendants have, in the preparation of their volumes, used the volumes of the plaintiff so as to interfere with his copyright.

17. As to Volumes 39 to 46, *held*, that upon comparing parts of each volume, those of the complainant and of the defendants, one with the other, there can be no doubt that in some respects in each case, the complainant's volumes has been used by defendants in the head notes, the statement of facts and the arguments of counsel; that in every volume prepared by defendants, there are unmistakable *indicia* that they have not confined themselves solely to the original sources of information, namely: the opinions of the judges, the records and the arguments of counsel; that in arranging the order of cases, and in the paging of the different volumes, complainant's edition has been followed by the defendants, and although that would not be sufficient to give a decree against defendants, yet, in connection with other similarities between the two editions, it shows that complainant's volumes have been used in editing and publishing defendants' volumes; that one of the most significant evidences of infringement, existing frequently in defendants' volumes, is the copying of the errors made in complainant's volumes.

18. It is no valid objection that the defendants were compelled to produce their books and papers on the accounting before the master. They were not thereby compelled to produce evidence against themselves, in aid of a forfeiture. That provision is the usual one in an interlocutory decree in a suit in equity for the infringement of a copyright. As the forfeiture of the volumes could not be obtained by this suit, although prayed for in the bill, the books and papers were admissible in evidence.

19. In ascertaining the damages, the circuit court did not err in disallowing to the defendants a credit for stereotyping the volumes.

20. Nor was it error to disallow a credit to the defendants for the amount paid to the different members of their firm for their services, in the way of salaries, as a part of the expense of conducting their business.

21. The master rightfully excluded a credit for

the costs of producing copies of the volumes which the defendants did not sell.

22. In regard to volumes which had been already sold by the defendants, and which they purchased as second hand books and resold, the plaintiff was thus twice injured by the acts of the defendants, and the sales of the second hand volumes must be accounted for as if they were first sales.

23. In regard to the general question of the profits to be accounted for by the defendants, as to the volumes in question, the only proper rule to be adopted is to deduct from the selling price the actual and legitimate manufacturing cost.

24. If the volume contains matter to which a copyright could not properly extend, incorporated with matter proper to be covered by a copyright, it being impossible to separate the profits on the one from the profits on the other as the profits result from the sale of the book as a whole, the owner of the copyright will be entitled to recover the entire profits on the sale of the book.

25. The conclusions of the master in matters of fact have every reasonable presumption in their favor, and are not to be set aside or modified, unless there clearly appears to have been error or mistake on his part.

[No. 71.]

Argued Nov. 8, 9, 1888. Decided Dec. 17, 1888.

APPEAL from a decree of the Circuit Court of the United States for the Northern District of Illinois, decreeing that the plaintiff was the owner of the copyright of certain volumes of law reports, and awarding damages against the defendants for an infringement of the copyright and a perpetual injunction. *Decree reversed* as to one volume, *and affirmed* as to the others.

Opinion below in 24 Fed. Rep. 686.

The facts are fully stated in the opinion.

Mr. **J. L. High,** for appellants:

Law reports are public property, not susceptible of private ownership, nor the subject of copyright under the Act of Congress.

This question was not decided in *Wheaton* v. *Peters*, 33 U. S. 8 Pet. 591 (8:1055); and is still an open question.

The opinions of the judges are public property, and not the subject of copyright by the reporter.

This principle is applicable to the case of an official reporter.

Drone, Copyrights, 161; 2 Morgan, Law of Literature, 569; *Little* v. *Hall*, 59 U. S. 18 How. 165 (15: 328); *Heine* v. *Appleton*, 4 Blatchf. 125; *Stationers Co.* v. *Seymour*, 1 Mod. 256.

The early English cases afford strong support for the position that the laws are not private property, and are not susceptible of private ownership.

The Stationers v. *The Patentees*, Carter, 89; Bac. Abr. title, *Prerogative*, F. 5; *Roper* v. *Streater*, cited in Skinner, 234; *Millar* v. *Taylor*, 4 Burr. 2304; *Basket* v. *University of Cambridge*, 1 Wm. Bl. 105; *Manners* v. *Blair*, 8 Bligh, N. R. 391.

The doctrine of exclusive literary ownership in law reports is contrary to public policy. The decisions of the Supreme Court of Illinois are part of the law of the land. They are, therefore, publications of the laws of the State, in like manner as are the published statutes and Acts of the Legislature.

Appellee is not entitled to relief because of noncompliance with the conditions of the Act of Congress of 1831, concerning copyrights.

The Act of Congress provided three conditions or requisites to obtaining a copyright.

1. Filing a printed copy of the title of the book in the clerk's office of the District Court of the United States for the given district, before publication;

2. Printing notice of the copyright on the title page, or on the succeeding page;

3. Delivery of a copy of the book to the clerk of the district court within three months after publication.

4 U. S. Stat. at L. 436.

The conditions imposed by the statute are indispensable to the creation of a copyright; and a strict performance of these conditions is absolutely necessary to the existence of any literary property in the published work, and of any right of action for an infringement.

Wheaton v. *Peters*, 33 U. S. 8 Pet. 591 (8: 1055); *Merrell* v. *Tice*, 104 U. S. 557 (26: 854); *Murray* v. *Bogue*, 1 Drew. 353; *Jollie* v. *Jaques*, 1 Blatchf. 618; *Baker* v. *Taylor*, 2 Blatchf. 82; *Struve* v. *Schwedler*, 4 Blatchf. 28; *Chase* v. *Sanborn*, 6 Pat. Off. Gaz. 932; *Parkinson* v. *Lasselle*, 3 Sawy. 330; Drone, Copyright, 266, 362 *et seq.* and cases cited.

If the volumes were, in fact, ever deposited with the clerk, competent proof should have been tendered and failure to prove this is absolutely fatal.

Merrell v. *Tice*, 104 U. S. 557 (26: 854).

The printed notice of the entry, upon the reverse of the title page, is one of the three indispensable conditions required by the Act of Congress.

Baker v. *Taylor*, 2 Blatchf. 82; *Donaldson* v. *Beckett*, cited in 4 Burr. 2408.

Appellee wholly failed to prove title to any of the volumes, as averred in his bill.

The decree should be reversed, because of appellee's acquiescence in the publication of the volumes, and because of his laches in seeking relief.

Saunders v. *Smith*, 3 Myl. & C. 711; *Beard* v. *Turner*, 13 L. T. N. S. 746; *Lewis* v. *Chapman*, 3 Beav. 133; *Tinsley* v. *Lacy*, 1 Hem. & M. 747; *Chappell* v. *Sheard*, 1 Jur. N. S. 996; *Rundell* v. *Murray*, Jac. 311; *Webb* v. *Powers*, 2 Wood. & M. 523; *Platt* v. *Button*, 19 Ves. Jr. 447; *Baily* v. *Taylor*, 1 Tamlyn, 295; *Johnson* v. *Wyatt*, 11 Week. Rep. 852.

If one acts in such manner as intentionally to make another believe that he has no right, or has abandoned it, and the other, trusting to that belief, does an act which he would otherwise not have done, the fraudulent party will be restrained from asserting his right.

Devereux v. *Burgwyn*, 5 Ired. Eq. 351, 355; *Hill* v. *Epley*, 31 Pa. 331.

Appellants' volumes are not an infringement of the original edition.

An abridgment is not a piracy.

Hawkesworth v. *Newbery*, Lofft, 775; *Gyles* v. *Wilcox*, 2 Atk. 141; *Spiers* v. *Brown*, 6 Week. Rep. 352; *Wilkins* v. *Aikin*, 17 Ves. Jr. 422; *Folsom* v. *Marsh*, 2 Story, 107; *Story* v. *Holcombe*, 4 McLean, 306; *Stowe* v. *Thomas*, 2 Wall. Jr. 547.

There can be no copyright in the labors of the judges.

Wheaton v. *Peters*, 33 U. S. 8 Pet. 591 (8: 1055); *Gray* v. *Russell*, 1 Story, 11; *Chase* v. *Sanborn*, 6 Pat. Off. Gaz. 932.

The title of a published work is not the sub-

ject of copyright; being a mere appendage or description, which is not within the meaning of the Act of Congress.

Osgood v. *Allen*, 1 Holmes, 185; Drone, Copyright, 145.

Appellants were compelled to make discovery in aid of the forfeitures sought by appellee. They were compelled to produce before the master their books and accounts, showing the extent of their publication and sale of the volumes in controversy.

Equity will never compel a discovery in aid of penalties of forfeitures, unless the right to such penalties or forfeitures is waived by the person seeking the discovery.

Story, Eq. Pl. §§ 521, 575, 576; Story, Eq. Jur. § 1494; Mitf. Eq. Pl. 186, 193, 198; Wigram, Discovery, 62, 150, 195; 1 Dan. Ch. Pr. 563; Drone, Copyright, 534; *U. S.* v. *Saline Bank of Va.* 26 U. S. 1 Pet. 100 (7:69); *Atwill* v. *Ferrett*, 2 Blatchf. 39; *Johnson* v. *Donaldson*, 18 Blatchf. 287, 3 Fed. Rep. 22; *Chapman* v. *Ferry*, 12 Fed Rep. 693; *Bird* v. *Hardwicke*, 1 Vern. 109, note; *Colburn* v. *Simms*, 2 Hare, 543; *Atty-Gen.* v. *Lucas*, Id. 566; *Chauncey* v. *Tabourden*, 2 Atk. 392.

The damages are excessive. The court erred in disallowing credit for stereotyping.

Appellants' salaries should have been allowed as part of the expense of conducting their business.

Prov. Rubber Co. v. *Goodyear*, 76 U. S. 9 Wall. 788 (19:566).

Appellants are not chargeable with profits on volumes which they purchased at second hand and resold.

Perrigo v. *Spaulding*, 12 Pat. Off. Gaz. 352; *S. C.* 13 Blatchf. 389; *Adams* v. *Burke*, 84 U. S. 17 Wall. 453 (21:700).

The court has no jurisdiction to award punitive damages in this form of action, its power being limited to the allowance of profits only.

Chapman v. *Ferry*, 8 Sawy. 191; 12 Fed. Rep. 693; *Livingston* v. *Woodworth*, 56 U. S. 15 How. 546 (14:809).

Mr. **Geo. W. Kretzinger**, for appellee:

Law reports are the subject of copyright.

Wheaton v. *Peters*, 33 U. S. 8 Pet. 591 (8:1055).

The plan, arrangement and combination of the materials are as fully protected by the copyright as the materials embodied in the plan, arrangement and combination.

Lawrence v. *Dana*, 7 Pat. Off. Gaz. 91, 4 Cliff. 1.

The statements of the case and the arguments of counsel may be the subject of property in the reporter.

Curtis, Copyright, 131.

Marginal notes and abstracts of argument are the subject of copyright.

Cobbett v. *Woodward*, L. R. 14 Eq. 407; *Bogue* v. *Houlston*, 5 DeG. & S. 275; Drone, Copyright, 152, 155; *Banks* v. *McDivitt*, 13 Blatchf. 163.

The combination of the citations with the statutes was a valuable and useful work in which copyright was held to vest.

Little v. *Gould*, 2 Blatchf. 362.

The copyright protects the whole and all the parts and contents of a book.

Drone, Copyright, 144, 157; 2 Morgan, Law of Literature, 565, 159.

There is no distinction between the work of a reporter of the decisions of a court of justice and that of any other author.

Hodges v. *Welsh*, 2 Irish Eq. 266; *Butterworth* v *Robinson*, 5 Ves. Jr. 709.

Where part of the matter is old, and part new, and the two are united, and by such union become more suitable and convenient for use, under the arrangement devised by the proprietor or publisher, he may protect his right by copyright.

Cary v. *Longman*, 1 East, 358; *Jarrold* v. *Houlston*, 3 Kay & J. 708; *Longman* v. *Winchester*, 16 Ves. Jr. 269; *Mawman* v. *Tegg*, 2 Russ. 385; Curtis, Copyright, 253; *Gray* v. *Russell*, 1 Story, 11; *Emerson* v. *Davies*, 3 Story, 768; *Greene* v. *Bishop*, 1 Cliff. 199.

The signature of the clerk to the statement that the work was deposited on the day and year named, gives equal official force and certainty as the signature of the clerk to the file mark of a declaration.

Dyer v. *Last*, 51 Ill. 181.

The clerk was the clerk not only of the district in which the copies of the volumes were required to be deposited, but he was the clerk of the court in which this suit was brought.

Thielmann v. *Burg*, 73 Ill. 294.

By making the objection upon specific ground, counsel has waived all general or other specific ground of objection.

Evanston v. *Gunn*, 99 U. S. 660 (25:306).

The deposit of the title page secures copyright.

Boucicault v. *Wood*, 2 Biss. 36; *Wheaton* v. *Peters*, 33 U. S. 8 Pet. 591 (8:1055); *Dwight* v. *Appleton*, 1 N. Y. Legal Obs. 198.

The objection to the evidence of title should have been upon the specific ground now urged.

Wilson v. *King*, 83 Ill. 235.

No laches can be imputed to appellee. The *onus* of proving the laches is on defendants.

Chappell v. *Sheard*, 1 Jur. N. S. 997; *Emerson* v. *Davies*, 3 Story, 772; *Little* v. *Gould*, 2 Blatchf. 169; *Saunders* v. *Smith*, 3 Myl. & C. 711.

The cases of *Beard* v. *Turner*, 13 L. T. N. S. 746; *Lewis* v. *Chapman*, 3 Beav. 133; and *Tinsley* v. *Lacy*, 1 Hem. & M. 747, are different from the case at bar; so are the cases of *Rundell* v. *Murray*, Jac. 311; *Platt* v. *Button*, 19 Ves. Jr. 447; *Baily* v. *Taylor*, 1 Tamlyn, 295; and *Johnson* v. *Wyatt*, 11 Weekly Rep. 852.

Appellants prepared the books republished by them from the books of appellee.

List Pub. Co. v. *Keller*, 30 Fed. Rep. 772; *Morris* v. *Ashbee*, L. R. 7 Eq. 34.

It is piracy for the second editor or publisher to appropriate the work of the first editor or publisher, although all the materials common to both books might have been procured from other sources.

Curtis, Copyright, 253; Bump, Copyright, 358.

The second author or editor could not borrow the materials collected and furnished, nor could he rightfully use the plan and arrangement, or the mode by which they are combined with the text.

Lewis v. *Fullarton*, 2 Beav. 6; *Hogg* v. *Kirby*, 8 Ves. Jr. 221; *Story* v. *Holcombe*, 4 McLean, 306; *Banks* v. *McDivitt*, 13 Blatchf. 161.

He cannot use the labors of a previous com-

piler and save his own time by copying the results of the previous compiler's study, although the same results could have been attained by independent labor.

Blunt v. *Patten*, 2 Paine, 396; *Emerson* v. *Davies*, 3 Story, 782; *Farmer* v. *Calvert Lith. & P. Co.* 5 Am. L. T. 174; 1 Flipp. 228.

Identity of contents, arrangement and combination, is strong evidence that the second book was borrowed from the first.

Lawrence v. *Dana*, 4 Cliff, 1-88; *Boucicault* v. *Wood*, 2 Biss. 38; *Emerson* v. *Davies*, 3 Story, 791.

In *Cary* v. *Longman*, 1 East, 358, it was held that the defendant had pirated from the plaintiff's book was proved in the clearest manner at the trial. The printed work itself was made use of by the defendants at the press, some of it clipped with scissors, with a few slips of paper containing MS. additions interspersed here and there, and some of these merely nominal and colorable.

In *Mawman* v. *Tegg*, 2 Russ. 385, evidence that plaintiff's book was used in arranging the new book for publication and to work from, was held to constitute proof of piracy.

Substantial identity or a striking resemblance, between the work complained of and that for which protection is claimed, creates a presumption of unlawful copying which must be overcome by defendant.

Drone, Copyright, 400; *Roworth* v. *Wilkes*, 1 Camp. 94.

Appellee's books were largely used to save labor.

A mere selection or different arrangement of parts of the original work, so as to bring the work into a smaller compass is not an abridgment.

Greene v. *Bishop*, 1 Cliff. 191; *Gyles* v. *Wilcox*, 2 Atk. 143.

Appellants were not compelled to make discovery in aid of forfeiture; no forfeiture was decreed.

The court can order an account of profits.

Stevens v. *Gladding*, 58 U. S. 17 How. 447 (15:155); *Colburn* v. *Simms*, 2 Hare, 543.

Damages not excessive.

Lupton v. *White*, 15 Ves. Jr. 432; *Copeland* v. *Crane*, 9 Pick. 79; *Dexter* v. *Arnold*, 2 Sumn. 109; *Miller* v. *Whittier*, 36 Maine, 585.

Profits upon resales were properly charged.

Mowry v. *Whitney*, 81 U. S. 14 Wall. 658 (20: 866); *Goulds Mfg. Co.* v. *Cowing*, 105 U. S. 255 (26:988); *Pike* v. *Nicholas*, L. R. 5 Ch. App. Cas. 260.

Mr. Justice **Blatchford** delivered the opinion of the court:

This is a suit in equity, brought in the Circuit Court of the United States for the Northern District of Illinois, on the 17th of December, 1887, by Eugene B. Myers against Bernard Callaghan, Andrew Callaghan, Andrew P. Callaghan, and Sheldon A. Clark, composing the firm of Callaghan & Co., Marshall D. Ewell, and Van Buren Denslow. [619]

The bill sets forth that the firm of E. B. Myers & Chandler, composed of the plaintiff and Horace B. Chandler, became the proprietors of volumes 32 to 38, both inclusive, of the reports of the Supreme Court of the State of Illinois, known as "Illinois Reports," prepared by Norman L. Freeman; that, as such proprietors, said firm, desiring to secure a copyright for the several volumes, under the Statutes of the United States, deposited in the office of the clerk of the District Court of the United States for the Northern District of Illinois, before publication, a printed copy of the title of the several volumes; and that they afterwards, and within three months of the publication of the volume, deposited in said office a copy of the work. The dates of the deposit of the titles of the several volumes were as follows: Volume 32, August 12, 1865; 33, April 21, 1866; 34, October 23, 1866; 35, January 28, 1867; 36, October 11, 1867; 37, December 31, 1866; 38, August 22, 1867. The alleged dates of the deposit in said office of a copy of the several volumes were as follows: Volume 32, January 17, 1866; 33, June 8, 1866; 34, October 23, 1866; 35, March 5, 1867; 36, November 13, 1867; 37, January 28, 1867; 38, October 10, 1867. [620]

The bill also alleges that the plaintiff became the proprietor of volumes 39 to 46, both inclusive, of the reports of the Supreme Court of the State of Illinois, known as "Illinois Reports," prepared by Norman L. Freeman; that, as such proprietor, he, desiring to secure a copyright for the several volumes under the Statutes of the United States, deposited in the office of the clerk of the District Court of the United States for the Northern District of Illinois, before publication, a printed copy of the title of the several volumes; and that he afterwards, and within three months of the publication of the volume, deposited in said office a copy of the work. The dates of the deposit of the titles of the several volumes were as follows: Volume 39, June 10, 1868; 40, September 18, 1868; 41, December 22, 1868; 42, May 21, 1869; 43, June 21, 1869; 44, September 27, 1869; 45, October 6, 1869; 46, October 14, 1869. The alleged dates of the deposit in said office of a copy of the several volumes were as follows: Volume 39, June 12, 1868; 40, November 6, 1868; 41, January 29, 1869; 42, July 7, 1869; 43, July 7, 1869; 44, October 2, 1869; 45, December 8, 1869; 46, December 8, 1869.

The bill further alleges that all the volumes were prepared by Mr. Freeman, and each contained a large amount of matter original with him, and a great number of the decisions and opinions of the Supreme Court of Illinois; that, among other original matter, Mr. Freeman prepared for each case a syllabus or head notes, and for many cases in each volume a statement of the facts of the case; that also in many of them he copied, or copied and arranged, the instructions ruled upon by the court below; that he also prepared and inserted, or gave, in all or many of them, the stipulations made, or made and filed, therein, and in many of them he gave the errors assigned; that he also prepared, for each of them, a table of the cases cited therein, and a table of the cases decided, and other original matter, and so arranged said decisions and the matter therein contained, or the matter in connection with the decisions, as to make each of the books, or each of the books and the matter therein contained, convenient and valuable to the persons using the decisions; that, in respect of volumes 32 to 38, the firm of E. B. Myers & Chandler, and in respect of volumes [621]

39 to 46, the plaintiff purchased from Mr. Freeman all his proprietary rights in the volumes, and paid him a large consideration therefor, and for his labor and care in preparing them, and used the labor and matter of Mr. Freeman in publishing the books; that, by the agreements with Mr. Freeman, the plaintiff and his partner were to have the copyright of volumes 32 to 38, and the plaintiff the copyright of volumes 39 to 46; that in respect of volumes 32 to 38, the said firm, and in respect of volumes 39 to 46, the plaintiff, divided the decisions and the matter accompanying them into volumes, and divided and arranged each of the volumes into pages; that the firm published over 1,500 copies of each of the volumes 32 to 38, and the plaintiff over 1,500 of each of the volumes 39 to 46; that, on the 13th of June, 1868, said Chandler sold and assigned to the plaintiff, by a written assignment, all his interest in and to volumes 32 to 38, and the copyrights thereof; and that the plaintiff still has the exclusive right to volumes 32 to 46.

The bill further alleges that, about July, 1877, the plaintiff reprinted volumes 37 and 38, and, as he made some changes in the arrangement of their pages, he did, before publication deposit in the office of the Librarian of Congress a copy of the printed title of each volume, on the 20th of July, 1877; that afterwards, on the 28 of July, 1877, and within one month of the publication thereof, he deposited in said office two copies of each of the volumes as reprinted.

The bill also alleges, as to all of the volumes, that the plaintiff had the exclusive right to the [622] arrangement of each of them, and the exclusive right to publish the head notes or syllabuses, and to the arrangement of the pages of the books and to the division of the opinions into separate volumes, and to the table of cases cited and table of cases decided, as published in each of them, and to the arrangement of the decisions, as accompanied with the head notes, stipulations, errors assigned, instructions, table of cases cited, table of cases reported, and indexes accompanying the same, and the exclusive right to all of said works, except to the matter contained in the opinions of the judges; that the defendants had full knowledge of the exclusive rights of the plaintiff, and attempted to buy them from him, but refused to pay the price charged by him, and thereupon proceeded to reprint and publish volumes 32 to 38, and, in doing so, used the decisions of the Supreme Court of Illinois only as published by the plaintiff, and prepared the volumes from the books of the plaintiff, and did not procure the matter from original sources, and, in all of the books, used the works of the plaintiff, and copied the title pages thereof, and used the division and arrangement of the plaintiff in the volumes and the paging thereof, and copied the table of cases cited and the table of cases reported from each of the books of the plaintiff, and also copied from the same the stipulations, errors assigned, and instructions given by the court; that, in publishing the statements of the cases, and in preparing the syllabuses, the defendants used the books of the plaintiff, and the changes they made were merely colorable, and were made only for the purpose of avoiding the claim of the plaintiff; that the books, as printed and published by the defendants, were all and each merely imitations of the volumes of the plaintiff, corresponding in number; that all and each of said republications by the defendants are piracies on the copyrights of the plaintiff, and the books have been made by them to take the place of, and as far as they can, to supersede the books of the plaintiff; that the defendants are selling them to the persons who would otherwise buy the books of the plaintiff, to his great damage and loss; that the defendants threaten to republish volumes 39 to 46; and that the aggregate value of the copyrights of the plaintiff is not less than $20,000, and his damage is not less than that sum.

The bill waives an answer on oath, and prays [623] for an injunction perpetually enjoining the defendants from publishing or selling, or offering for sale, any of the books, and for a decree that all of them so published by the defendants are forfeited to the plaintiff, and that they be delivered to him, and for an account of all published and sold, and for a decree for damages.

The members of the firm of Callaghan & Co. put in an answer to the bill. It sets up that a printed copy of volume 32 was not deposited until more than three months after publication. It avers that but a small amount of original matter was prepared by Mr. Freeman for any of the volumes 32 to 46, and that but few statements of cases were prepared by him, and those few were drawn by him from the opinions of the court in the cases reported. It denies that he prepared any tables of cases cited for any of those volumes, and denies that he so arranged the decisions and matter contained in the volumes as to make the volumes convenient and of value to the persons using them. It avers that all matters contained in the volumes are public and common property, forming part of the law of the State of Illinois, and as such not susceptible of copyright, or in any manner literary property, in which a private citizen can have a monopoly under the Act of Congress regulating the subject of copyright; that whatever labor, literary or otherwise, was done upon the volumes by Mr. Freeman, was done in his official capacity as reporter of the decisions of the Supreme Court of Illinois, a public office then existing under and by virtue of the laws of that State, and to which Mr. Freeman had been duly appointed; and that all labor, literary or otherwise, by Mr. Freeman, in his capacity as official reporter, upon the volumes, was public and common property, not susceptible of copyright or of private literary ownership.

The answer admits that the defendants had negotiations with the plaintiff concerning the purchase of his interest in volumes 39 to 46, consisting of the stereotype plates and printed stock of those volumes; that, in such negotiations, the plaintiff proposed to sell his copyrights in volumes 32 to 46, but no price of [624] value was ever attached by either party to such copyrights, and they were always treated as a mere incident to the proposed sale, and all offers made and received on either hand were made with reference to such stereotype plates and printed stock, and it was understood by all parties, that, if such sale were consum-

mated, the copyrights should be "thrown in," without additional charge.

The answer also admits that in republishing volumes 32 to 38 the defendants have used the opinions of the Supreme Court of Illinois as published by the plaintiff; but avers that they have corrected errors in names, citations, and other matters therein, and denies that they have prepared the books from those of the plaintiff, or used the work of the plaintiff, except in so far as plaintiff's books are free to the use of any and all persons, or have copied his title pages, or have used his paging, or have copied his tables of cases cited or reported, or the stipulations, errors assigned, or instructions given. It avers that the statements of cases and syllabuses in the volumes as republished by the defendants are wholly original and entirely different from and unlike those of the plaintiff, except in the few instances where there is an apparent resemblance, owing to the fact that those of the defendants have been drawn from the opinions of the court, and those of the plaintiff in the same cases appear to have been drawn from the same source; and that the volumes so republished by the defendants contain large amounts of new, original, and valuable matter, prepared expressly for those volumes, and not contained in any of the volumes of the plaintiff. It admits that the defendants have under consideration the republication of volumes 39 to 46. It also avers, that, for many years before the filing of the bill, the plaintiff had abandoned volumes 32 to 38; that his stereotype plates and stock of those volumes were destroyed in October, 1871, and none of them were ever reproduced by him until about July or August, 1877, when he reprinted volumes 37 and 38; that, prior thereto, he had for many years repeatedly announced that he should never reproduce those volumes; that, more than a year before the filing of the [25] bill, the defendants notified the plaintiff of their intention to republish volumes 32 to 38, and frequently thereafter notified him of such intention, and publicly announced the same by advertisement, and from time to time, as such republication progressed, during the spring and summer of 1877, notified him of the progress of the work, and, as the volumes appeared from time to time during the spring and summer of 1877, the plaintiff was constantly apprised thereof, and at divers times during that year, and before, the defendants received various propositions from the plaintiff for an exchange of volumes 32 to 38, so being republished, for volumes 39 to 46, which the plaintiff had for sale; that the plaintiff, down to the filing of the bill, never objected to such republication, but always appeared to acquiesce therein, and encouraged the defendants to proceed therewith, and, from his conduct during such period, the defendants always believed, down to the filing of the bill, that such republication was being done with his acquiescence and consent; and that the plaintiff, by his conduct, is estopped from receiving the relief asked. The answer also denies all the material allegations of the bill.

Ewell and Denslow each put in an answer, disclaiming all interest in the publication of any volumes of the reports by Callaghan & Co., and all interest in such volumes.

Issue was joined and proofs were taken, and, on the 10th of February, 1881, the circuit court entered an interlocutory decree, finding that the plaintiff was the owner of the copyright or exclusive right of publication of volumes 32 to 38; and that Callaghan & Co. had violated such copyright by publishing, offering for sale, and selling copies of said seven volumes, and Ewell and Denslow by editing the same. The decree awarded a perpetual injunction against all of the defendants, from further publishing or selling, or transferring or removing any of said books, and ordered a reference to a master, Henry W. Bishop, to ascertain and report what number of each of the volumes had been printed, and what number sold, and at what prices; and directed that the members of the firm of Callaghan & Co. might be examined in regard thereto, and might be required to produce their account books and [626] papers, and that the master ascertain and report what was the market value of each of the books of the plaintiff prior to the illegal publication by the defendants, and what was the actual cost or value of reprinting and binding each of the volumes, and that, upon the making of the report, the plaintiff might apply for a further order in regard to the damages to be allowed to him for the illegal publication and sale of the volumes. The decree also gave leave to the plaintiff to file a supplemental bill, based on the fact that, since the filing of the original bill, Callaghan & Co. had proceeded to publish and sell copies of the books described in the bill as volumes 39 and 41 to 46.

The decision of the circuit court is reported in 10 Biss. 139 and 5 Fed. Rep. 726. The ruling of the court was (1) that the volumes of reports were the proper subject of a copyright under the Act of Congress, for at least what was the work of the mind and hand of the reporter, namely: the head notes, and the statements of facts and of the arguments of counsel, notwithstanding he could have no copyright in the opinions of the court; (2) that there had been a compliance with the Act of Congress in the procurement of the several copyrights; (3) that the defendants had, in preparing volumes 32 to 38, used the volumes of the plaintiff so as to interfere with his copyright; (4) that he had not consented to the publications made by the defendants, or abandoned his rights by acquiescence, laches, or otherwise.

On the 14th of February, 1881, the plaintiff filed a supplemental bill against the same defendants, reciting the material allegations of the original bill, and averring that since it was filed the defendants had published and sold large numbers of volumes 39 and 41 to 46, and were threatening to publish volume 40; that, in the volumes they had published, they had used the plaintiff's volumes, and had copied his arrangement or division into volumes of the matter contained in his volumes, and had copied his whole arrangement of each of them, and had used each of them to make, and had made, their books an imitation and copies of his books, and had advertised and sold their books as the same books as his, and had not resorted to the records for the opinions and [627] other matter contained in their books, but had copied the same from his books, using and copying considerable portions of the original

matter furnished by Mr. Freeman, in some instances copying exactly, and in others making merely colorable changes; that before any of the publications of the defendants were made, the plaintiff had advertised his books extensively; that the decisions of the Supreme Court of Illinois, as divided by the plaintiff into volumes, had, by reason of what was done by him, become known by the name which had been applied to the classification so made by the plaintiff; that such division was the property of the plaintiff, and was valuable, and was covered and protected by his copyright; that the defendants had copied the title or name of each of the books; that each of the books of the defendants was made to supersede and take the place of one of the books of the plaintiff, of corresponding number; and that they were being so sold, to his great damage.

The supplemental bill waives an answer on oath, and prays for a perpetual injunction restraining the defendants from publishing, selling, offering for sale, or removing beyond the jurisdiction of the court, any of said books, and for a decree that they pay to the plaintiff all his damages by reason of such publication and sale.

On the 18th of February, 1881, the members of the firm of Callaghan & Co. filed a cross bill in the same court against Myers, reciting the proceedings on the original bill and the terms of the interlocutory decree of February 10, 1881. It averred that the discovery and accounting provided for thereby were in progress before the master, Mr. Bishop; that Bernard Callaghan, one of the firm, had been partially examined concerning the number of volumes printed by Callaghan & Co., and on hand, and had already been required to produce before the master, for the examination of Myers and his counsel, books and papers of Callaghan & Co., relating to the volumes and the number thereof printed; that such examination was still progressing; that Callaghan & Co. had in their possession certain copies of volumes 32 to 38, and Myers claimed that he [628] was entitled to a forfeiture of the same and a delivery thereof; that Myers, on the 11th of February, 1881, brought an action of replevin against Callaghan & Co., to recover those copies; that the writ was in the hands of the marshal for service; that Myers was ignorant of the precise number and whereabouts of the copies, but as soon as the examination and discovery then progressing before the master should have disclosed the number and location of the copies, Myers would instruct the marshal to seize them under the writ; that Myers was not entitled to any discovery from Callaghan & Co. in aid of his proceedings for a forfeiture of the copies; that Myers, having taken the decree for a discovery as to the copies, and having obtained a discovery thereunder, and having acquiesced in the publication of the volumes by the defendants, was estopped in equity from claiming any forfeiture or recovery of any of the copies; and that such decree, and the examination and discovery before the master, amounted to a waiver of the forfeiture or recovery by Myers.

The cross bill waived an answer on oath, and prayed for a perpetual injunction to restrain Myers from further proceeding with the action of replevin, and from instituting any further action for the forfeiture or recovery from Callaghan & Co. of any copies of volumes 32 to 38, and for an injunction to that effect *pendente lite*.

Myers answered the cross bill, setting forth the interlocutory decree made in the original suit, and admitting that he claimed that the volumes in the possession of Callaghan & Co. became forfeited to him under the Act of Congress, and alleging that the interlocutory decree did not provide for a discovery or an accounting, and that he was not seeking any discovery from Callaghan & Co., for the purpose of aiding him in procuring the possession of the books; that the volumes were not published by Callaghan & Co, with his knowledge, acquiescence, or consent; that he claimed the benefit of the forfeiture provided for by section 99 of the Act of July 8, 1870, chap. 230, 16 Stat. at L. 214 (now section 4964 of the Revised Statutes); and that he had done nothing to waive or abandon the right given to him by that statute. A replication was filed to this answer.

The members of the firm of Callaghan & Co. [629] filed an answer to the supplemental bill on the 22d of June, 1881. It admitted that the firm had published and sold volumes 39 and 41 to 46, and denied that in publishing those volumes they had made any other use of the plaintiff's volumes than such fair and legitimate use, by way of reference, consultation and otherwise, as might be made of any previous publication by a succeeding author or compiler treating of the same subject, and denied that they had copied the plaintiff's arrangement or division of matter, other than that the cases reported in the defendants' volumes followed each other in the same order as in the plaintiff's volumes, and denied that they had used the plaintiff's volumes to make their books an imitation or copies of them, or that their books had been made in imitation of those of the plaintiff. They denied that they had advertised or sold their books as the same books as those of the plaintiff, but admitted that they had used the name "Freeman's Reports" in their catalogues and circulars, and averred that such use was in accordance with the uniform usage of law publishers, in indicating volumes of law reports by the name of the original reporter, and with no intention of announcing the volumes of the defendants as those of the plaintiff; that, as appeared by their catalogues and circulars, the defendants, by a note immediately following the words "Freeman's Reports," directed attention to the fact that the volumes of the defendants were a different, revised, and re-edited edition, and were all reported and edited by persons other than Mr. Freeman, whose names were stated in the note; that the plaintiff had no property in the name "Freeman's Reports," yet as soon as the supplemental bill was filed, the defendants desisted from such use of the words "Freeman's Reports," and had corrected their catalogues and circulars by changing the words "Freeman's Reports" to "Illinois Reports;" and that, although they had used the words "Freeman's Reports" in the manner described for several years prior to the filing of the supplemental bill, the plaintiff had not objected thereto prior to that time.

The answer admitted that the defendants, in
0] making their books, had taken the opinions of the court from the volumes as reported by Mr. Freeman, but stated that in all cases they had carefully compared each of the opinions with the original opinions of the court, on file or recorded in the respective cases, and had made frequent corrections therein, to correspond with the originals, and that, except as to such use of the opinions, the remaining matter in the volumes of the defendants was obtained from the original records of the court, and was arranged, reported, compiled, and edited wholly by the original labor of the editors employed by the defendants for that purpose, and whose names appeared as such editors on the title page and cover of each of the volumes of the defendants. It also averred that the titles of the volumes of the defendants were so different from those claimed by the plaintiff that they could not be mistaken therefor even by a casual purchaser or observer; and that the volumes of the defendants were new and original productions, with new and original tables of cases, head notes, statements of facts, abstracts of briefs of counsel, corrected opinions, foot notes, and indexes, and were in no manner copies of, or infringements upon, the volumes of the plaintiff. It also averred that the plaintiff could not have, under the Acts of Congress or otherwise, any exclusive right in the opinions of the court, as published, or in their arrangement or division, or in the titles of the volumes. The answer also denied all the material allegations of the supplemental bill. A replication was filed to this answer.

Ewell and Denslow answered the supplemental bill by an answer disclaiming all interest in the publication of the volumes named in the supplemental bill, and all interest in those volumes.

On the second of January, 1883, Myers amended his supplemental bill by averring that the defendants had infringed his copyright by reprinting and publishing volume 40. An answer was put in to such amendment, and a replication to that answer.

Proofs were taken as to the supplemental bill, and on the 3d of March, 1884, the court made an interlocutory decree that the plaintiff was the owner of the copyright and of the ex-
1] clusive right of publication of volumes 39 to 46; that the defendants had in some particulars infringed said copyrights, and that the plaintiff recover the profits received or made or accrued therefrom; and referring it to John I. Bennett, a master, to report such profits; and directing that the defendants might be examined in relation thereto, and might be required to produce before the master their books of account and papers relating to the publication and sale of such volumes, and that the master should report also the damages.

The decision of the court is found in 20 Fed. Rep. 441. The only question considered in the decision was that of infringement. The court held that in some respects in each case the Freeman volume had been used by the defendants, in the head notes, the statements of facts, and the arguments of counsel.

On the 17th of April, 1882, the master, Mr. Bishop, reported that the defendants had printed 4,313 of volumes 32 to 38, and had sold 2,909 of the same, the amount of the sales of the several volumes being as follows: Volume 32, $1,990.91; 33, $1,971.73; 34, $1,884.24; 35, $1,945.09; 36, $1,933.47; 37, $1,878.68; 38, $1,847.07; being a total of $13.451.19, and an average of $4.62¼ per volume. He stated that no testimony had been offered as to the market value of the volumes before publication by the defendants. He also reported the cost or value of reprinting and binding the several volumes to be as follows: Volume 32, $942.88; 33, $782.35; 34, $664.13; 35, $843.50; 36, $835.97; 37, $773.18; 38, $885.78; making a total of $5,727.79, not including the item of proof reading or the item of expense of selling, or a charge for stereotyping. The defendants excepted to this report because the master had not allowed to the defendants the amount paid by them for proof reading and editorial work on the volumes, or for stereotyping. The court, on a hearing on the report and exceptions, referred the cause back to the master, Mr. Bishop, to ascertain and report, on the evidence given and on further evidence, the total amount of the damages sustained by the plaintiff in consequence of the illegal publication and sale.

Mr. Bishop made a second report, on the 2d of February, 1884, on the previous proofs and on new testimony. He again reported the [632]
total number of copies printed of volumes 32 to 38 to have been 4,313, and the total number of them sold to have been 2,909. He reported the amount of sales, as before, by items, making a total of $13,451.19, and an average of $4.62¼ per volume. Excluding charges for stereotyping, counsel fees, editorial work, and proof reading, and including 12⅞ per cent of the gross sales as a legitimate item of expense in conducting the business of the defendants in the course of the publications, he reported the cost of reprinting and binding the several volumes to have been as follows: Volume 32, $1,064.25; 33, $883.06; 34, $749.63; 35, $952.10; 36, $943.59; 37, $872.70; 38, $999.81; making the total cost of reprinting, binding, and disposing of the volumes, $6,465.14. Deducting that from the $13,451.19 left a balance of $6,986.05, which he reported as the damages sustained by the plaintiff by reason of the illegal sale and publication.

The plaintiff filed sundry exceptions to the second report of Mr. Bishop, and the defendant filed three exceptions to it. The first exception of the defendants was, that the master had not allowed them credit for the cost of stereotyping; the second, that he had not allowed, as part of the expenses of conducting the business of the defendants, salaries paid to them for their services, the same amounting to about $12,000 a year; the third, that he had allowed to them only 12⅞ per cent of their gross sales as expenses incurred in effecting such sales, and had not allowed the salaries as a part of such expenses; whereas, he should have allowed credit to them, on account of such expenses, for such additional percentage, over and above 12⅞ per cent, as the amount of such annual salaries bore to the gross annual sales during the period in question.

On the 24th of October, 1884, the master, Mr. Bennett, filed his report, finding that the defendants had disposed of 2,292 copies of volumes 39 to 46. He stated that the plaintiff

claimed that 156 more volumes had been sold, making 2,448 in all. The 156 volumes were volumes which, after being originally sold by the defendants, had again come to their hands and been resold once or oftener. The master disallowed these resales, but reported that, if [633] they were to be allowed, the sum of $696.38 should be added as damages for such resales. He reported the average sale price of the volumes, received by the defendants, to have been $4.464, making a total sale price of $10,231.48. He reported that the cost of all the volumes sold was $4,679.55; that the defendants were entitled to a credit of $1,118.49, on account of the general expenses of conducting their business, being 12 per cent of their gross sales; that the total cost of producing the volumes sold was $5,798.04; and that, deducting that amount from the $10,231.48, left $4,433.44 as the total amount of net receipts from sales, or damages to the plaintiff.

The plaintiff excepted, by his first and second exceptions, to the disallowance in respect of the 156 copies resold, and filed other exceptions. The defendants filed exceptions in regard to the number of volumes sold, the number of volumes on hand, the average price of the sales, the total gross receipts from the sales, the cost of the volumes sold, the amount of the credit for general expenses of conducting their business, the net receipts from the sales, the refusal of the master to allow them credit for the cost of producing the volumes unsold and remaining on hand, or credit for the sum expended by them for editorial work in preparing the volumes, or credit for the amount expended by them in stereotyping the volumes, or credit for the amount paid them as compensation for their services, or credit on account of sundry other matters.

The court, on a hearing on the reports of the masters and the exceptions thereto, sustained the first and second exceptions of the plaintiff to the report of the master, Mr. Bennett, and overruled all the other exceptions of both parties to both of the reports.

On the 9th of July, 1885, a final decree was entered, adjudging that the plaintiff recover $340.70, as profits on the resales of the 156 volumes, in addition to the $4,433.44 reported by the master, Mr. Bennett, and the $6,986.05 reported by the master, Mr. Bishop, the three sums amounting to $11,760.19, and the costs of the suit. The decree granted a perpetual injunction as to volumes 32 to 46. It also restrained the defendants from selling or disposing [634] of the stereotype plates of those volumes; and dismissed the bill as to Denslow and Ewell, without costs. It further adjudged that the right of the plaintiff to recover the additional sum of $896.19, as claimed by the plaintiff and referred to in the second report of the master, Mr. Bishop, in case the cost of composition and press work should be ratably distributed over the whole edition printed of volumes 32 to 38, and also the rights of all parties under the cross bill, and the rights of all parties to the said action of replevin for the unsold copies of volumes 32 to 38, be reserved for determination on the hearing of the cross bill.

The report of the decision of the circuit court on the exceptions to the reports of the masters, is found in 24 Fed. Rep. 636.

From such final decree, the defendants composing the firm of Callaghan & Co. have appealed to this court.

The volumes of law reports of which the plaintiff claims a copyright are in the usual form of such works. Each volume consists of a title page, of a statement of the entry of copyright, of a list of the judges composing the court, of a table of the cases reported in the volume, in alphabetical order, of a head note or syllabus to each opinion, with the names of the respective counsel, and their arguments in some cases, and a statement of facts, sometimes embodied in the opinion and sometimes preceding it, and of an index, arranged alphabetically, and consisting substantially of a reproduction of the head notes. Of this matter, all but the opinions of the court and what is contained in those opinions is the work of the reporter and the result of intellectual labor on his part.

The broad proposition is contended for by the defendants, that these law reports are public property, and are not susceptible of private ownership, and cannot be the subject of copyright under the legislation of Congress. It is urged that Mr. Freeman, the reporter, was a public officer, whose office was created by chapter 29 of the Revised Statutes of Illinois of 1845, which enacted as follows, in regard to the supreme court and the reporter:

"Sec. 20. The court shall appoint some person learned in the law to minute down and [646] make report of all the principal matters, drawn out at length, with the opinion of the court, in all such cases as may be tried before the said court; and the said reporter shall have a right to use the original written opinion after it shall have been recorded by the clerk.

"Sec. 21. The reporter, before entering upon his duties, shall be sworn by some one of the justices of the supreme court faithfully to perform the duties of his said office. He may, for misconduct in office, neglect of duty, incompetency, or other cause shown, to be entered of record, be removed from office.

"Sec. 22. It shall be the duty of the reporter to deliver to the Secretary of State, as soon as convenient after publication, such number of copies of the respective volumes of the reports of said court as may be necessary to enable the said secretary to distribute the same in the manner provided in the following section, together with one hundred copies in addition, to be deposited in the secretary's office for the use of the State."

Section 23 provided for the distribution of the volumes by the Secretary of State, and section 24 provided that, upon the delivery of the requisite number of any volume, the Secretary of State should deliver to the reporter a certificate specifying the number of copies which had been so delivered, and that such certificate should entitle the reporter to a warrant drawn by the auditor of public accounts upon the treasury for an amount, for those volumes, at the price for which the books should be sold to individuals, provided the price should not exceed the ordinary price of law books of the same description, to be determined by the auditor, treasurer, and Secretary of State. These statutory provisions were amended in 1863, by

making the term of office of the reporter six years; and in 1865 it was enacted that the price of the volumes to be delivered to the Secretary of State should be $6 each. The reporter was given a salary, by law, in 1877, of $6,000 a year.

It is further contended that Mr. Freeman, in preparing the official edition of the reports, was not an author, within the meaning of the [647] Act of Congress, and that it was not intended by that Act that he should assert a monopoly in the result of his official labors.

But, although there can be no copyright in the opinions of the judges, or in the work done by them in their official capacity as judges (*Banks* v. *Manchester*, 128 U. S. 244, *ante*, 425), yet there is no ground of public policy on which a reporter who prepares a volume of law reports, of the character of those in this case, can, in the absence of a prohibitory statute, be debarred from obtaining a copyright for the volume, which will cover the matter which is the result of his intellectual labor.

In the present case there was no legislation of the State of Illinois which forbade the obtaining of such a copyright by Mr. Freeman, or which directed that the proprietary right which would exist in him should pass to the State of Illinois, or that the copyright should be taken out for or in the name of the State, as the assignee of such proprietary right. Even though a reporter may be a sworn public officer, appointed by the authority of the Government which creates the court of which he is made the reporter, and even though he may be paid a fixed salary for his labors, yet, in the absence of any inhibition forbidding him to take a copyright for that which is the lawful subject of copyright in him, or reserving a copyright to the Government as the assignee of his work, he is not deprived of the privilege of taking out a copyright, which would otherwise exist. There is, in such a case, a tacit assent by the Government to his exercising such privilege. The universal practical construction has been that such right exists, unless it is affirmatively forbidden or taken away; and the right has been exercised by numerous reporters, officially appointed, made sworn public officers, and paid a salary under the Governments both of States and of the United States.

This question, was, it is true, not directly adjudged in *Wheaton* v. *Peters*, 33 U. S. 8 Pet. 591 [8: 1055]. In that case the owners of the copyrights of Wheaton's Reports of the Supreme Court of the United States brought a suit in equity against Mr. Peters for publishing and selling a volume of his Condensed Reports of the Supreme Court. The bill was dismissed by the circuit court. On an appeal by the [648] plaintiffs to this court one of the points urged by the defendants was, that reports of the decisions of this court, published by a reporter appointed under the authority of an Act of Congress, were not within the provisions of the law for the protection of copyrights. This court held (1) that the plaintiffs could assert no common-law right to the exclusive privilege of publishing, but must sustain such right, if at all, under the legislation of Congress; (2) that under such legislation there must have been, in order to secure the copyright, a compliance with the provisions of the statute in regard to the publication in a newspaper of a copy of the record of the title of the book, and in regard to the delivery of a copy of it, after publication, to the Secretary of State. The court remanded the case to the circuit court for a trial by a jury, as to whether there had been a compliance with the above named requisites of the Act of Congress. In a note by Mr. Peters, at page 618 [8: 1065] of the report of the case, he states that he has been informed that the court did not consider the point whether reports of the decisions of the court published by a reporter appointed under the authority of an Act of Congress were within the provisions of the law for the protection of copyrights.

When the suit was brought Mr. Wheaton had published the twelve volumes of his copyrighted reports. The allegation of the bill was, that the volume complained of, published by Mr. Peters, contained all the reports of cases found in the first volume of Wheaton's Reports. It appears from the report of the case and the record in it, that Mr. Wheaton had published his first volume in 1816, and his twelfth volume in 1827. From March 3, 1817, for three years, the reporter had a salary of $1,000 a year, and the same salary from May 15, 1820, to March 3, 1826, and for three years from February 22, 1827. The decree of this court, providing for a trial by a jury (p. 698 [8: 1094]), covered the entire twelve volumes of Wheaton's Reports.

If this court had been of opinion that there could not have been a lawful copyright in the [649] volumes of Wheaton's Reports, it would have been useless to send the case back to the circuit court for an inquiry whether the conditions precedent to the obtaining of a lawful copyright, under the Act of Congress, had been complied with, especially in view of the fact that the opinion of the court concludes (p. 668, Bk. 8: 1083) with this statement: "It may be proper to remark that the court are unanimously of opinion that no reporter has or can have any copyright in the written opinions delivered by this court; and that the judges thereof cannot confer on any reporter any such right." Therefore, the only matter in Wheaton's Reports which could have been the subject of the copyrights in regard to which the jury trial was directed, was the matter not embracing the written opinions of the court, namely: the title page, table of cases, head notes, statements of facts, arguments of counsel, and index. Such work of the reporter, which may be the lawful subject of copyright, comprehends also the order of arrangement of the cases, the division of the reports into volumes, the numbering and paging of the volumes, the table of the cases cited in the opinions (where such table is made), and the subdivision of the index into appropriate condensed titles, involving the distribution of the subjects of the various head notes and cross references, where such exist. A publication of the mere opinions of the court in a volume, without more, would be comparatively valueless to anyone.

The case of *Wheaton* v. *Peters* was decided at January Term, 1834. In *Gray* v. *Russell*, 1 Story, 11, in 1839, *Mr. Justice* Story, in speaking of the question as to how far a person was

at liberty to extract the substance of copyrighted law reports says (p. 20); "In the case of *Wheaton* v. *Peters*, 33 U.S. 8 Pet. 591 [8:1055] the same subject was considered very much at large. It was not doubted by the court that Mr. Peters' Condensed Reports would have been an infringement of Mr. Wheaton's copyright, supposing that copyright properly secured under the Act, if the opinions of the court had been or could be the proper subject of the private copyright by Mr. Wheaton. But it was held that the opinions of the court, being published under the authority of Congress, [650] were not the proper subject of private copyright. But it was as little doubted by the court, that Mr. Wheaton had a copyright in his own marginal notes, and in the arguments of counsel as prepared and arranged in his work. The cause went back to the circuit court for the purpose of further inquiries as to the fact, whether the requisites of the Act of Congress had been complied with or not, by Mr. Wheaton. This would have been wholly useless and nugatory, unless Mr. Wheaton's marginal notes and abstracts of arguments could have been the subject of a copyright (for that was the work which could be the subject of a copyright); so that if Mr. Peters had violated that right, Mr. Wheaton was entitled to redress." This seems to us to be a proper view of the decision in *Wheaton* v. *Peters;* and that decision is as applicable where a reporter receives a compensation or salary from the Government, as where he does not, in the absence of any restriction against his obtaining a copyright.

In the present case although Mr. Freeman, during the period of his preparation of volumes 32 to 46, received no direct salary from the State, it is contended by the defendants that he received from the State compensation for his services, through the purchase by it, under a statute, of copies of his volume at a stated price of $6 per copy for 553 copies of each volume, and that this was substantially the payment of a salary to him by the State. But, as stated before, in the view we take of the case, the question of a salary or no salary has no bearing on the subject.

The general proposition that the reporter of a volume of law reports can obtain a copyright for it as an author, and that such copyright will cover the parts of the book of which he is the author, although he has no exclusive right in the judicial opinions published, is supported by authority. Curtis, Copyright, 131, 132; *Butterworth* v. *Robinson*, 5 Ves. Jr. 709; *Cary* v. *Longman*, 1 East, 358, and note, 362; *Mawman* v. *Tegg*, 2 Russ. 385, 398, 399; *Hodges* v. *Welsh*, 2 Irish Eq. 266, 287; *Lewis* v. *Fullarton*, 2 Beav. 6; *Saunders* v. *Smith*, 3 Myl. & C. 711; *Sweet* v. *Benning*, 16 C. B. 491; *Jarrold* v. *Houlston*, 3 Kay & J. 708, 719, 720.

[651] It is further contended by the defendants, that the plaintiff is not entitled to relief in respect to volumes 32 to 46, because he did not comply with the conditions of the statute concerning copyrights. Those volumes were all of them published while the Act of Congress of February 3, 1831, chap. 16 (4 Stat. at L. 436), was in force. The 4th section of that Act provided that no person should be entitled to the benefit of the Act, unless he should before publication deposit a printed copy of the title of the book intended to be copyrighted in the clerk's office of the district court of the district wherein the author or proprietor should reside. The section also required that the clerk should record such title forthwith, in a book, in words prescribed in the section, giving a copy of the title, under the seal of the court, to the author or proprietor whenever he should require the same. It also provided that the author or proprietor should, within three months from the publication of the book, deliver or cause to be delivered a copy of the same to the clerk of the district court, and that it should be the duty of the clerk, at least once in every year, to transmit a certified list of all such records of copyright, including the titles so recorded and the dates of record, and also all the copies of books deposited in his office, to the Secretary of State, to be deposited in his office.

Although under section 6 of the same Act, the exclusive right to the copyright vests upon the recording of the title of the book, and runs for the prescribed period from that date, and although the right of action for infringement, under section 6, also accrues at that time, yet it is quite clear, that, under section 4, in respect at least to suits brought after three months from the publication of the book, it must be shown, as a condition precedent to the right to maintain the suit, that a copy of the book was delivered to the clerk of the district court within three months from the publication.

Section 5 of the same Act provides that no person shall be entitled to the benefit of the Act, unless he shall give information of copyright being secured, by causing to be inserted in the published copies on the title page of the book, or the page immediately following, the words: "Entered according to Act of Congress, [652] in the year——, by A. B., in the clerk's office of the District Court of ——."

Undoubtedly, the three conditions prescribed by the statute, namely, the deposit before publication of the printed copy of the title of the book, the giving of information of the copyright by the insertion of the notice on the title page or the next page, and the depositing of a copy of the book within three months after the publication, are conditions precedent to the perfection of the copyright. *Wheaton* v. *Peters*, 33 U. S. 8 Pet. 591 [8:1055]; *Merrell* v. *Tice*, 104 U. S. 557 [26:854].

It is contended by the defendants that the plaintiff has not proved the date of the publication of any of the volumes in question; that the only proof he has offered is in the form of certificates by the clerk of the district court, showing the dates of the filing of the printed titles of the volumes; and that he has failed to show whether such filing preceded or followed the publication of the volumes.

The record shows that the plaintiff, in respect of volumes 32 to 46, offered in evidence fifteen certificates made by William H. Bradley, clerk of the District Court of the United States for the Northern District of Illinois, each of which was in the following form, except as to the number of the volume and its contents, and except that, as to volumes 39 to 43, the name, "Eugene B. Myers," and as to volumes 44 to 46, the name "E. B. Myers," was substituted for the names "E. B. Myers & Chandler:"

"UNITED STATES OF AMERICA, } ss:
"*Northern District of Illinois,*

"CLERK'S OFFICE OF THE DISTRICT
"COURT OF THE UNITED STATES
"FOR SAID DISTRICT.

"*Be it remembered*, That on the 12th day of August, A. D. 1865, E. B. Myers & Chandler, of said district, deposited in this office the title of a book as follows, to wit: Reports of cases at law and in chancery argued and determined in the Supreme Court of Illinois, by Norman L. Freeman, counselor-at-law, volume 32, containing the remainder of the cases decided at the April Term and a part of the cases decided at the November Term, 1863—

"The right whereof they claim as proprietors, in conformity with an Act of Congress [653] entitled 'An Act to Amend the Several Acts Respecting Copyrights.'

WM. H. BRADLEY, *Clerk.*

"NORTHERN DISTRICT OF ILLINOIS, *ss:*

"I, William H. Bradley, Clerk of the District Court of the United States for the Northern District of Illinois, do hereby certify the foregoing to be a true copy from the records of said court in the matter of the entry of a copyright by E. B. Myers & Chandler, as the same appears of record in said court and now remaining in my custody.

"In testimony whereof I have hereunto set my hand and affixed the seal of said court, at my office, in Chicago, this 12th day of August, A. D. 1865, and of our independence the 90th year.

"[L. S.] "WM. H. BRADLEY, *Clerk.*

"Work deposited Jan'y 17th, 1866.

"WM. H. BRADLEY, *Cl'k.*"

The certificates show that the dates of the several deposits of the titles and of the works were as hereinbefore stated. The certificate to the copy of the title bears date in each case the same day as the deposit of the title. In each case, the memorandum of the deposit of the work was in the same form as that in regard to volume 32, with the necessary change of date, except that in regard to volumes 35, 36, 42, 43 and 44, the memorandum was, "Work deposited in my office," with the date.

When the certificates were offered in evidence, the defendants objected to the introduction of that portion of each of the papers, at the bottom thereof, which purported to show the date when the volume was deposited, on the ground that the same constituted no part of the certificate, but was a mere anonymous statement; that it did not appear when or by whom the same was made; and that the evidence was [654] incompetent to show the date of the deposit. The objection was overruled by the court, and the defendants excepted.

They also objected to the introduction of the paper pertaining to volume 34, on the ground that, even if the memorandum at the bottom of the paper was competent evidence of the date when the volume was deposited, the deposit was made at the same time with the deposit of the printed title page, namely: October 23, 1866; that it did not appear that the title page was filed in advance of the publication and the work deposited after publication; and that the paper was, therefore, incompetent as evidence. The objection was overruled by the court, and the defendants excepted to such ruling.

The defendants also objected to the introduction of the paper as to volume 35, for the reason that it purported to show that the title of the volume was deposited on the 28th of January, 1867, while the printed notice on the back of the title page of that volume stated that the copyright was entered "in the year 1866;" and that, because of such variance, the paper was incompetent as evidence. The objection was overruled by the court, and the defendants excepted to the ruling.

These various objections are now urged by the defendants, and it is contended that the memorandum of the date of the deposit of the work, written on the certificate, and purporting to be signed by the clerk, is not in the form of a certificate by the clerk of the fact and the date of the deposit of the book, and is not competent proof of such fact or date, and is not attested by the official seal of the clerk; and that no proof was offered as to the genuineness of the signature purporting to be that of the clerk.

The statute makes no provision for the keeping, by the clerk, of a record of the deposit of the book with him after publication. The memorandum of the deposit of the book, signed in each case by the clerk, appears to have been written, in each case, on the certified copy, furnished to the proprietor, by the clerk, of the record of the deposit of the title of the book. The two things were thus connected together by the act of the officer whose duty it was to receive both the deposit of the title and the deposit of [655] the book. The paper amounts to a sufficient certificate by him of the fact and the date of the deposit of the book. In the absence of evidence to the contrary, which it was open to the defendants to introduce, it must be presumed that the deposit of the title was made in each case before publication, and, also, that in every instance where the work purports to have been deposited within three months after the date of the deposit of the title, it was deposited within three months after publication.

So, also, in the case of volume 34, it must be equally presumed, in the absence of evidence to the contrary, that the deposit of the title was made before publication, and that the deposit of the work, though made on the same day with the deposit of the title, was not made prior to publication.

In the case of volume 32, however, although it is to be presumed that the title was deposited before publication, yet, as the work was deposited five months and five days after the deposit of the title, it cannot be presumed that such deposit of the work was made within three months after publication. The evidence therefore fails as to volume 32; but it is sufficient, *prima facie*, as to all the other volumes.

Section 4 of the Act of 1831 requires the clerk to give a copy of the title as deposited and recorded, under the seal of the court, to the author or proprietor who deposits it, whenever he shall require the same. Necessarily, such copy is sufficient *prima facie* evidence of the deposit of the title. Such a copy was given in regard to each of the volumes in question here. On each of these papers the memorandum of the fact and of the date of the deposit of the work, signed by the clerk was written,

The clerk was the officer required to receive the deposit of the work. He was not required to keep a record of such a deposit, and he was required to transmit the work so deposited to the Secretary of State, at least once a year. The memorandum in the present case of the fact and date of the deposit, purporting to be signed by the clerk, must be regarded as a sufficient *prima facie* certificate of such deposit, and as competent evidence of the fact and of the date, without further proof of the signature of the clerk, [656] that being on the same paper with his signature as clerk to the certificate of the copy of the record of the deposit of the title, and it being open to the defendants to show that his signature to the memorandum was not genuine.

We do not think the present case is governed by the decision in *Merrell* v. *Tice*, 104 U. S. 557 [26:854]. In that case the Librarian of Congress had given a certificate to a copy of the record of the deposit of the title of the book. On that paper was written a memorandum in these words: "Two copies of the above publication deposited" on a date given. This memorandum was not signed by the Librarian of Congress. This court held the memorandum not to be competent as proof of the deposit of the two copies of the book, on the ground that it was not a certificate of that fact. We are of opinion that the memorandum in the present case, purporting to be signed by the same clerk, is substantially a certificate of the fact and date of the deposit of the work, written by him on the same paper with the other certificate; and that it is not open to the objection which obtained in the case of *Merrell* v. *Tice*.

The defendants offered in evidence certificates made by the auditor of public accounts and by the Secretary of State of the State of Illinois, showing that, on the 2d of October, 1865, Mr. Freeman delivered to the Secretary of State, for the use of the State, 553 copies of volume 32, required by law to be furnished by the reporter, and, on the 23d of October, 1866, 553 copies of volume 34. The introduction of this evidence was objected to by the plaintiff, on the ground that the papers constituted no evidence of the publication of either of the volumes, and were incompetent. The objection was sustained by the court, and the defendants excepted to the ruling. The exclusion of these papers is assigned as error. The papers also show the payment by the State, for each set of the copies, at the rate of $6 per volume. As the delivery of the copies of volume 32 to the Secretary of State, for the use of the State, took place on the 2d of October, 1865, and the work was not deposited in the clerk's office until the 17th of January, 1866, it is contended that such delivery of the copies to the State [657] was a publication of the volume, and that the deposit of it did not take place until three months and fifteen days after publication. We think this assignment of error must prevail; that the evidence offered was competent; that the delivery of the copies for the use of the State was a publication of the volume; that the deposit of the work was not made in time; and that the copyright of volume 32 therefore fails. But we do not think the same objection is tenable as to volume 34, although the 553 copies of that volume were delivered on October 23, 1866, and the title and the work were both of them deposited on that day. It must be presumed, in the absence of evidence to the contrary, that the deposit of the title preceded the publication, and that the delivery of the copies to the Secretary of State preceded the deposit of the work in the clerk's office. Where the three things are prescribed by the statute to be done in consecutive order, and all three appear to have been done on the same day, it will be presumed that the statute was complied with, leaving the *prima facie* evidence open to be rebutted.

In regard to volume 35, the title was deposited January 28, 1867, and the notice printed in the volume purports to show that the copyright was entered in 1866. The statute required that each copy of the book should have inserted in it a statement of the year the copyright was entered. It is sufficient to say, in answer to this objection, that the variance must be regarded as immaterial, inasmuch as the statement that the title was recorded in an earlier year than the actual year, being conclusive on the person taking the copyright, could cause no injury to any other person or to the public, because the copyright would expire in twenty-eight years from the expiration of the year stated in the notice in the book, and not in twenty-eight years from the time of the recording of the title.

In regard to volume 36, it is objected that the certificate of the clerk shows that the printed title was deposited by "E. B. Myers & Chandler," and that the printed notice of the entry of copyright in the volume as published purports to show that the copyright was entered by E. B. Myers alone. We think that, under [658] the circumstances of the case, as the printed notice contained the name of E. B. Myers, the variance was immaterial, and that the statute was substantially complied with, particularly as it is not shown that the defendants were misled by the variance or induced to do or omit anything because of it.

It is also urged by the defendants that the court erred in finding the title to the volumes to be in the plaintiff, because he failed to prove any written assignment or transfer to him from Mr. Freeman as to any of the volumes, or from Chandler as to his alleged interest in volumes 32 to 38, or to prove any means through which he derived title to any of the volumes. By section 4 of the Act of 1831 the proprietor of a book, as well as its author, could obtain a copyright; and provision was made, in the form of record given in that section, for a claim by the depositor of the title of the book as its proprietor, and for the deposit of the copy of the book by the proprietor. While, after the obtaining of a copyright, a written assignment may be necessary to convey title to it, or a written license to give a right to reproduce copies of the copyrighted book, we perceive no reason why Myers or Myers & Chandler could not become the owners by a parol transfer of whatever right Mr. Freeman, prior to the taking of the copyright, had to convey. While the work was in manuscript no written transfer of such manuscript from Mr. Freeman was necessary, because the copyright had not yet been taken. Moreover, the defendants, in all their transactions with the plaintiff, recognized his title to the copyrights of volumes 32 to 38,

as to which the titles had been deposited by E. B. Myers & Chandler, and parol evidence that the plaintiff owned the copyrights of volumes 32 to 46, at the time the infringements were committed, was introduced without objection, and was sufficient *prima facie* evidence until rebutted. If the defendants had objected to [659] this parol evidence the production of the written assignment from Chandler, set up in the bill, could have been required.

It is also objected that the plaintiff acquiesced in, consented to, and ratified, the publication of the volumes by the defendants, and was guilty of laches in bringing his suit. The evidence on this subject is voluminous, and it would not be profitable, either for the purposes of this case or as a guide for any other case, to discuss it at length. We are of opinion that neither of these defenses is established; that the plaintiff did not consent to the republication of the volumes by the defendants; that he never abandoned his copyrights, or consented to surrender them without consideration, or gave the defendants cause to understand that he did so or would do so; that he never acquiesced in any infringement of his copyrights by the defendants; and that he was not guilty of laches in seeking relief. The defendants recognized his copyrights in volumes 32 to 38, by offering to purchase them, and there was considerable negotiation on that subject. This fact is inconsistent with consent and abandonment, and the other evidence in the case is inconsistent with any abandonment.

It is also contended by the defendants, that each of the volumes as published by them was a new and independent work, not copied from that of the plaintiff, but prepared by the original labor of the editors employed by the defendants. While it is admitted that volumes 32 to 38, as published by the defendants, were, with the exception of the foot notes, prepared entirely from the plaintiff's volumes, it is contended that volumes 39 and 41 to 46 were, with the exception of the opinions of the judges, prepared from the records and files of the Supreme Court of Illinois. The evidence on the subject of infringement is very full and minute. It is impossible for us to discuss it at length, and we must content ourselves with stating, as a general result, that we concur in the views stated by *Judge* Drummond, in his decision in the circuit court, in regard to volumes 32 to 38. He says (10 Biss. 139, 147): "In considering the question of infringement of the copyright by the defendants, it must be borne in mind what is the character of the work. They are reports of the decisions of the Supreme Court of this State, to which no one can have a copyright; but he may have to the head notes, and statements of each case, and of the arguments of counsel. These head notes and statements [660] which have been made are in themselves an abridgment; the one of the opinions of the court, consisting of the principles of law decided, and the other an abstract of the facts and of the arguments. It should also be stated that the volumes of the defendants, as edited by those employed by them, are very much condensed, as compared with Mr. Freeman's reports, and yet the paging of the volumes is substantially the same throughout, so that the cases in the corresponding volumes appear on the same page. The list of cases which precedes each report is the same. The defendants Ewell and Denslow, who were employed by the other defendants to annotate these decisions or reports, both state, upon examination, that their work was independent of that of Mr. Freeman; but it appears from the evidence that all the volumes of Mr. Freeman were used in thus editing or annotating; and although it may have been their intention to make an independent work, it is apparent, from the comparison of the Freeman volumes and those of the defendants, that the former were used throughout by the editors employed by the defendants. It is true that in each volume, perhaps in the majority of cases, there is the appearance of independent labor performed by them, without regard to the volumes of Mr. Freeman; but yet in every volume it is also apparent that Mr. Freeman's volumes were used; in some instances words and sentences copied without change, in others, changed only in form; and the conclusion is irresistible that, for a large portion of the work performed in behalf of the defendants, the editors did not resort to original sources of information, but obtained that information from the volumes of Mr. Freeman. Undoubtedly it was competent for an editor to take the opinions of the Supreme Court, and possibly from the volumes of Mr. Freeman, and make an independent work; but it is always attended with great risk for a person to sit down, and with the copyrighted volume of law reports before him, undertake to make an independent report of a case. It is not difficult to do this, going to the original sources of information, to the decisions of the court, the briefs of counsel, the records on file in the clerk's office, without regard to the regular volumes of reports. Anyone who has tried it can easily understand the difference [661] between the head notes of two persons, equally good lawyers, and equally critical in the examination of an opinion, where they are made up independent of each other; and, bearing in mind this fact, it seems to be beyond controversy, that although in many, and perhaps most, instances there is a very considerable difference between the head notes of the defendants' volumes and those of the plaintiff, the latter have been freely used in the preparation of the former. I conclude, therefore, that the defendants have, in the preparation of those volumes, from 32 to 38 inclusive, of the Illinois Reports, used the volumes of the plaintiff so as to interfere with his copyright."

So, also, we concur with the conclusions of *Judge* Drummond in regard to volumes 39 to 46. He says (20 Fed. Rep. 441): "The present inquiry is limited to what is alleged to be an infringement by the defendants of volumes 39 to 46, inclusive, of Mr. Freeman's Illinois Reports. Volume 40 seems never to have been regularly published like the other volumes, although the evidence of the infringement of the plaintiff's copyright in that volume is perhaps stronger than that applicable to any of the other volumes named. Upon comparing parts of each of the volumes, those of the complainant and of the defendants, one with the other, I think there can be no doubt that in some respects, in each case, the Freeman volume has been used by the defendants in the head notes, the state-

ments of facts, and the arguments of counsel. That is, there are certain unmistakable *indicia*, that in every volume prepared by the defendants they have not confined themselves solely to the original sources of information, namely: the opinions of the judges, the records, and the arguments of counsel." He also says (p. 442): "The fact appears to be, and indeed it is not a subject of controversy, that in arranging the order of cases, and in the paging of the different volumes, the Freeman edition has been followed by the defendants; but, while this is so, I should not feel inclined, merely on that account and independent of other matters to give a decree to the plaintiff, although it is claimed that the arrangement of the cases and the paging of the volumes are protected by a copyright. Undoubtedly, in some cases, where are involved labor, talent, judgment, the classification and disposition of subjects in a book entitle it to a copyright. But the arrangement of law cases and the paging of the book may depend simply on the will of the printer, of the reporter, or publisher, or the order in which the cases have been decided, or upon other accidental circumstances. Here the object on the part of the defendants seems to have been that there should not be confusion in the references and examination of cases; but the arrangement of cases and the paging of the volumes is a labor inconsiderable in itself, and I regard it, not as an independent matter, but in connection with other similarities existing between the two editions, when I say, taking the whole together, the Freeman volumes have been used in editing and publishing the defendants' volumes." It may be added, that one of the most significant evidences of infringement exists frequently in the defendants' volumes, namely: the copying of errors made by Mr. Freeman.

[662]

The next objection urged is that the defendants were compelled to produce their books and papers on the accounting before the master, the plaintiff having sought a forfeiture of the copies of volumes 32 to 38; and that the defendants were thereby compelled to produce evidence against themselves, in aid of such forfeiture.

The original bill prays for a decree that all of the copies published by the defendants of volumes 32 to 38 be forfeited to the plaintiff, and that the defendants be required to deliver the same to him. The supplemental bill contains no such prayer in regard to volumes 39 and 41 to 46, but contains a prayer for general relief. The cross bill and the answer to it show that Myers brought an action of replevin against Callaghan & Co., to recover as forfeited the copies of the infringing volumes 32 to 38. The final decree shows that the cross suit was not brought to a hearing with the original suit. On the contrary, the final decree reserves for consideration and determination, on the hearing of the cross bill, the rights of the parties thereunder, and their rights in respect to the action of replevin to recover possession of the unsold copies of volumes 32 to 38. Although, under the provisions of the interlocutory decree in respect to volumes 32 to 38, the defendants were required to produce their account books and papers before the master, and were examined in regard to them, yet the final decree did not award any forfeiture, and so no injury has resulted to the defendants by reason of such provision of the interlocutory decree, or by reason of any action thereunder. Irrespective of this, it is determined by the case of *Stevens* v. *Gladding*, 58 U. S. 17 How. 447 [15:155], that the penalties given by section 7 of the Copyright Act of 1831 cannot be enforced in a suit in equity. The provision of the interlocutory decree for an examination of the defendants in regard to the subject of inquiry, and for the production by them of their account books and papers, is the usual provision in an interlocutory decree in a suit in equity for the infringement of a copyright. As the forfeiture of the volumes could not be obtained by this suit, although prayed for in the bill, the evidence was admissible.

[663]

We now come to the question of damages. It is contended that the circuit court erred in disallowing to the defendants a credit for stereotyping volumes 32 to 46. Both of the masters refused to allow credit for the cost of stereotyping. Stereotyping was not a necessary incident of printing and publishing, as type setting was. It was resorted to by the defendants to enable them the more successfully and profitably to infringe, by dispensing with the necessity of resetting the type for every new edition, and thus reducing the cost of multiplying copies in the future. The stereotype plates were made without the consent of the plaintiff; and if credit is allowed for them the plaintiff is compelled to buy and pay for them, when they are useless to him and when he has stereotyped for himself volumes 32 to 46.

It is also contended that both of the masters erred in disallowing a credit to the defendants for the amount paid to the different members of their firm for their services in the way of salaries, as a part of the expense of conducting their business, being the amount of about $12,000 a year during the period in controversy. These amounts were drawn by the defendants under the partnership agreement, as family and personal expenses. We do not think that the value of the time of an infringer, or the expense of the living of himself or his family, while he is engaged in violating the rights of the plaintiff, is to be allowed to him as a credit, and thus the plaintiff be compelled to pay the defendant for his time and expenses while engaged in infringing the copyright. If the defendants, instead of employing others to do the work, had chosen to do it themselves, they might as well have made a charge, and claimed to have been credited for it, of so much a month or a year for their services in preparing the infringing volumes. *Elizabeth* v. *Nicholson Pavement Co.* 97 U. S. 126,139 [24:1000, 1006]. The case stands on a different footing from that of the salaries of the managing officers of a corporation, as in *Providence Rubber Co.* v. *Goodyear*, 76 U. S. 9 Wall. 788 [19:566].

[664]

The defendants also object that the master, Mr. Bennett, should have found the number of volumes sold by the defendants to have been 103 less, and that the total number of bound volumes on hand found by him was erroneous, as also was the total number of volumes found by him to have been on hand unsold. The exceptions to the master's report in these respects substantially complain that the master found too many volumes to have been sold, by 103.

We do not perceive any error in the above particulars. The master, Mr. Bennett, rightfully excluded a credit for the cost of producing copies of the volumes which the defendants did not sell. There were no profits from copies not sold, and, therefore, there could have been nothing to charge against such profits.

In regard to the exceptions to the report of Mr. Bennett, that he found the average selling price of the defendant's volumes to be $4.464 each, instead of $4.34, and that he found their gross receipts from sales of the infringing volumes to have been $10,231.48, instead of $9,459.87, we are of opinion that the selling price found and the gross receipts found were not too high.

[665] We do not concur in the view of the defendants that there were no net receipts or profits on the sales of volumes 39 to 46, or in the view that the master, Mr. Bennett, erred in refusing credit to the defendants for the amount paid by them for editorial work in preparing their volumes, or in the view that the circuit court erred in allowing the $340.70 as profits on the resales of the 156 volumes mentioned in the first and second exceptions of the plaintiff to the report of the master, Mr. Bennett.

In regard to the 156 copies, they were volumes which had been already sold by the defendants, and which they purchased as second hand books and resold. The master had held that, as he had charged the defendants with the profits on the first sale of these volumes, the profits on their resale could not be charged against them. The circuit court overruled this view and, as we think, properly. The sale of the volume originally prevented the purchase from the plaintiff of a lawful volume, and the sale of the same infringing volume a second time prevented the purchase from the plaintiff of another lawful volume. The plaintiff was thus twice injured by the acts of the defendants, and the sales of the second hand volumes must be accounted for as if they were first sales. *Birdsell* v. *Shaliol*, 112 U. S. 485, 487, 488 [28:768, 769].

The circuit court held that the master approximated as nearly as could be done to the the true amount, in fixing the selling price at $4.464 per volume. We concur in this view.

In regard to the eighth exception of the defendants to the report of the master, Mr. Bennet, that he had credited the defendants, in their expense account, with only 12 per cent on their gross sales, instead of 17 per cent, the circuit court held that, as Mr. Bennett had allowed 12 per cent and Mr. Bishop had allowed 12¼ per cent for such average expenses, and those conclusions were so nearly alike, the court would allow their findings in this regard to stand. We concur in this view, and also in the conclusion of the circuit court sustaining the findings of the two masters as to the average price per volume at which the defendants sold the volumes.

666] In regard to the general question of the profits to be accounted for by the defendants, as to the volumes in question, the only proper rule to be adopted is to deduct from the selling price the actual and legitimate manufacturing cost. If the volume contains matter to which a copyright could not properly extend, incorporated with matter proper to be covered by a copyright, the two necessarily going together when the volume is sold, as a unit, and it being impossible to separate the profits on the one from the profits on the other, and the lawful matter being useless without the unlawful, it is the defendants who are responsible for having blended the lawful with the unlawful, and they must abide the consequences, on the same principle that he who has wrongfully produced a confusion of goods must alone suffer. As was said by *Lord* Eldon, in *Mawman* v. *Tegg*, 2 Russ. 385, 391: "If the parts which have been copied cannot be separated from those which are original, without destroying the use and value of the original matter, he who has made an improper use of that which did not belong to him must suffer the consequences of so doing. If a man mixes what belongs to him with what belongs to me, and the mixture be forbidden by the law, he must again separate them, and he must bear all the mischief and loss which the separation may occasion. If an individual chooses in any work to mix my literary matter with his own, he must be restrained from publishing the literary matter which belongs to me; and if the parts of the work cannot be separated, and if by that means the injunction, which restrained the publication of my literary matter, prevents also the publication of his own literary matter, he has only himself to blame." The present is one of those cases in which the value of the book depends on its completeness and integrity. It is sold as a book, and not as the fragments of a book. In such a case, as the profits result from the sale of the book as a whole, the owner of the copyright will be entitled to recover the entire profits on the sale of the book, if he elects that remedy. *Elizabeth* v. *Nicholson Pavement Co.* 97 U. S. 126, 139 [24: 1000, 1006].

In considering the exceptions of the defendants to the masters' reports in matters of fact, questioning the accuracy of their conclusions in respect to the amount of the defendants' profits, we have observed the rule recognized and affirmed in *Tilghman* v. *Proctor*, 125 U. S. 136, 149 [31:664, 668], that, in dealing with such exceptions, "The conclusions of the master, depending upon the weighing of conflicting testimony, have every reasonable presumption in their favor, and are not to be set aside or modified unless there clearly appears to have been error or mistake on his part."

On the whole case we are of opinion that the final decree was correct, except in respect of volume 32. The amount of damages reported by the master, Mr. Bishop, as to that volume, and allowed by the final decree as part of the $6,986.05, was $926.66. That sum is disallowed and must be deducted. The other items of recovery in the decree were proper. The injunction as to volume 32 must be vacated, and the appellee will recover his costs of this court. [667]

The decree of the Circuit Court is reversed as to volume 32, and is affirmed in all other respects; and the case is remanded to that court, with a direction to correct the decree in the particulars above indicated, and to take such further proceedings as may be according to law and not inconsistent with this opinion.

[590]

W. P. WARE, *Appt.*,

v.

JAMES H. ALLEN *et al.*

(See S. C. Reporter's ed. 590-597.)

Conditional agreement—evidence to control.

1. Where, before the signing of a written instrument, it was agreed between the parties thereto that it was to be of no effect unless, upon consultation with counsel named, the defendant should be assured that the transaction out of which it arose was lawful—*held*, that proof that they were advised by such counsel that such transaction was illegal shows that the instrument never went into effect; that the condition upon which it was to become operative never occurred.

2. *Held, further*, that this is not a question of contradicting or varying a written instrument by parol testimony, but a case, well recognized in the law, by which an instrument, whether delivered to a third person as an escrow or to the obligee in it, is made to depend as to its going into operation upon events to occur or to be ascertained thereafter.

[No. 99.]

Argued Nov. 28, and Dec. 3, 1888. Decided Dec. 17, 1888.

APPEAL from a decree of the Circuit Court of the United States for the Southern District of Mississippi, dismissing a suit in chancery based upon a written instrument under a Mississippi Statute authorizing attachments to be issued out of the Courts of Chancery. *Affirmed.*

The facts are stated in the opinion.

Messrs. **Marcellus Green** and **Calderon Carlisle**, for appellant:

The purpose of this defense by parol proof is to vary, contradict, qualify and add to the terms of the written instrument. The rule against the admission of such testimony is well settled.

Martin v. *Cole*, 104 U. S. 39 (26:651); *Bank of U. S.* v. *Dunn*, 31 U. S. 6 Pet. 51 (8:316); *Brown* v. *Wiley*, 61 U. S. 20 How. 442 (15:965); *Bank of the Metropolis* v. *Jones*, 33 U. S. 8 Pet. 12 (8:850); *Forsythe* v. *Kimball*, 91 U. S. 291 (23:352); *Bast* v. *First Nat. Bank*, 101 U. S. 96, 97 (25:796); *Union Mut. L. Ins. Co.* v. *Mowry*, 96 U. S. 547 (24:675); *Brantley* v. *Carter*, 26 Miss. 285; *Wren* v. *Hoffman*, 41 Miss. 619; *Powell* v. *Jones*, 12 Smedes & M. 507, 508; *McGuire* v. *Stevens*, 42 Miss. 731; *Ellis* v. *Kelly*, 33 Miss. 696, 698.

The rule is the same in equity as at law.

Martin v. *Cole*, 104 U. S. 34 (26:649).

Mr. **J. M. Allen**, for appellees:

We are not seeking to vary, alter or contradict a written contract, but to show that the writing here sued on was never an operative contract; that it was delivered on a condition that made its delivery in the nature of an escrow. Evidence is admissible for such purpose.

Simonton v. *Steele*, 1 Ala. 357; *McCulloch* v. *Hoffman*, 10 Hun, 133; *Roberts* v. *Austin*, 5 Whart. 313; *Thompson* v. *Clubley*, 1 Mees. & W. 212; *Benton* v. *Martin*, 52 N. Y. 570; *Sweet* v. *Stevens*, 7 R. I. 375; *McFarland* v. *Sikes*, 54 Conn. 250; *Norman* v. *Norman*, 11 Ind. 288; *Stevens* v. *Parker*, 7 Allen, 361; Randolph, Commercial Paper, §§ 227, 228; *Wallis* v. *Littell*, 11 C. B. N. S. 369.

The true rule is where a suit is brought on a fraudulent contract, *In pari delicto potior est conditio defendentis.*

Fay v. *Fay*, 121 Mass. 561; *Sternbury* v. *Bowman*, 103 Mass. 325; *Church* v. *Muir*, 33 N. J. L. 318; *Fenton* v. *Ham*, 35 Mo. 409; *Powell* v. *Inman*, 7 Jones, L. 28; Chitty, Cont. 680; *Miller* v. *Marckle*, 21 Ill. 152; *Westfall* v. *Jones*, 23 Barb. 9; *Nellis* v. *Clark*, 20 Wend. 24; *Ager* v. *Duncan*, 50 Cal. 325.

Mr. Justice **Miller** delivered the opinion of the court: [592]

This is an appeal from the Circuit Court of the United States for the Southern District of Mississippi.

The suit was originally commenced in the Chancery Court of Copiah County, in that State, and its equity jurisdiction was based upon a statute of Mississippi authorizing attachments to be issued out of the courts of chancery. The case was removed into the Circuit Court of the United States by reason of the diverse citizenship of the parties, and no question was made in that court with regard to the right to proceed in it as a case in equity.

W. P. Ware was the plaintiff below, and from a decree dismissing his bill he has taken this appeal. The action was brought upon a written instrument, of which the following is a copy:

"NEW ORLEANS, *Nov. 7th*, 1881.

"Ninety days after date we promise to pay W. P. Ware or order ten thousand dollars for two notes of T. P. Ware for five thousand dollars each, dated August 21, '81, one on demand and one at 30 days, provided we are not defeated in the suit against T. P. Ware; if so, this note is void.

"Yours Truly,

"(Signed) ALLEN, WEST & BUSH."

The pleadings and the evidence present, without much contradiction, the following leading facts: it appears that T. P. Ware, a brother of the appellant, W. P. Ware, was conducting a mercantile business at Hazlehurst, in the State of Mississippi, and in the course thereof had extensive dealings with the firm of Allen, West & Bush, a mercantile house in the City of New Orleans, by which he became indebted to them at the date of the above paper [593] in the sum of about eighteen thousand dollars. The business of T. P. Ware was conducted almost entirely by his brother, the plaintiff in this action, and was so embarrassed that the debts could not be paid. It would also appear from the testimony that W. P. Ware had, a year or two before, conducted an unsuccessful business at the same place, in his own name, and being likely to fail, or having become insolvent, had sold out his store and goods to T. P. Ware, his brother, but as agent, for the latter ostensibly, continued to manage or control the business which was thereafter carried on at the same stand in the name of T. P. Ware.

In this condition of affairs, W. P. Ware made a visit to Allen, West & Bush, at New Orleans, and had several interviews with them there, during which time the instrument now sued upon was executed. He stated to that firm, in the course of those interviews, that his brother was unable to pay his debts, and that his creditors were becoming impatient; that he himself

held two notes made by his brother, for $5,000 each, amounting to $10,000, and that he desired defendants to initiate proceedings to attach the goods of T. P Ware, or to obtain from him an assignment or mortgage which would secure their debt as well as his own. For that purpose he proposed to assign over to them the two notes which he held against his brother, T. P. Ware, taking their obligation to pay him the amount. The defendants were disinclined to enter upon this course of proceeding, stating that they did not know of any cause for which an attachment could be issued or which would justify them in seizing the property of their debtor. The plaintiff replied that he would furnish them with cause for such attachment if they would enter into the arrangement which he proposed, that is to say, that he would show them sufficient reason for the seizing of the property by an attachment. The defendants again expressed their doubt about the success of such a course, but said they would like to consult Judge Harris, who lived in Mississippi, and also their counsel, J. M. Allen. Mr. Ware seemed impatient of this delay, as there was danger that somebody else might attach the property, and thus defeat both of their claims; [594] and finally, under his pressure, the notes of T. P. Ware were transferred to the defendant firm, and they gave the instrument upon which this suit is brought.

The testimony is ample to show that before the paper was signed or agreed upon, it was distinctly understood that it was to be of no effect unless, upon consultation with Judge Harris or J. M. Allen, or both of them, the defendants were assured that the proceeding was lawful and the attachment for the full amount of both claims could be enforced. It is very true that the plaintiff does not agree to this, in the full extent in which it is thus stated by at least two or three witnesses, but all the circumstances go to confirm the truth of this statement of what actually occurred.

As soon as the defendants could do so they asked the opinion of Judge Harris upon the safety of the proposed transaction, and he declined, for reasons growing out of his relationship to Mr. Ware, to give any opinion upon the subject, or to take any part in the matter. The other counsel for the defendants, Mr. Allen, upon whose approval the transaction was to be binding, emphatically disapproved of it, and advised the defendant firm to have nothing to do with it, or with the notes of W. P. Ware against his brother, in any proceedings which they might take to collect their own claim.

Accordingly the defendants, after some delay, instituted a suit in attachment against T. P. Ware, and seized the goods at Hazlehurst. The amount then sued for was their own debt, and no more, a little over eighteen thousand dollars. This proceeding went on in the usual manner, and resulted in a recovery, by Allen, West & Bush, of their debt, or the most of it. It also appears that W. P. Ware was promptly notified of the fact that the firm declined to proceed in the manner he had suggested.

These transactions took place in the autumn of 1881, shortly after the execution of the paper sued on here, which matured, according to its terms, on the 7th day of February, 1882. The present suit was commenced in February, 1883.

The transaction by which W. P. Ware, who was the acting manager of the affairs of his brother, undertook to secure a large sum out [595] of the remnants of the second failure of that concern, whether it was really owned by W. P. or T. P. Ware, by having that brother give him two notes, one falling due on demand and the other thirty days after date, amounting to $10,000, and by inducing Allen, West & Bush, who had a large *bona fide* claim against the failing concern, to take these two notes and put them in with their own, and by his aid secure an attachment that would cover all the goods and secure the payment of the debts due to them both, does not commend itself to the conscience of a chancellor. It is bitterly assailed by the defendants as an unmitigated fraud on the part of the plaintiff, with the additional allegation that the failure of W. P. Ware and the sale made to his brother was a fraud also, of which the present transaction was intended to be a repetition.

We did not think it necessary to inquire further into the evidence brought to sustain this defense, for we are quite clear that the testimony does establish the agreement alleged by the defendants to have been made at the various interviews between the persons composing the firm of Allen, West & Bush, or some of them and the plaintiff, at and before the time when they delivered to him the instrument sued on and received from him the two notes made by his brother, T. P. Ware, that the firm were to have an opportunity to consult counsel, upon whom they relied, as to the validity of the transaction, and that if such advice was adverse, then the instrument given by them was to be of no effect.

It also sufficiently appears that they were advised, without hesitation, by the counsel to whom they had reference in those conversations about the agreement, that the transaction was not one that would stand the test of a legal investigation. This is to be considered in connection with the fact that the firm only brought suit for their own claim; and have since returned, or offered to return, the notes of W, P. Ware, which were given him by his brother and delivered to them when the paper was executed.

We are of opinion that this evidence shows that the contract upon which this suit is brought never went into effect; that the condition upon [596] which it was to become operative never occurred, and that it is not a question of contradicting or varying a written instrument by parol testimony, but that it is one of that class of cases, well recognized in the law, by which an instrument, whether delivered to a third person as an escrow or to the obligee in it, is made to depend, as to its going into operation, upon events to occur or to be ascertained thereafter.

The present case is almost identical in its circumstances with that of *Pym* v. *Campbell*, in the Court of Queen's Bench, 6 El. & Bl. 370. The defendants in that case had signed an agreement for the purchase of an interest in an invention, which the evidence showed was executed with the understanding that it should

not be a bargain until a certain engineer, who was to be consulted, should approve of the invention. There was a verdict for the defendants, which was sustained, and the following language was used by Erle, *J.*, on discharging the rule to show cause: "I think this rule ought to be discharged. The point made is that this is a written agreement, absolute on the face of it, and that evidence was admitted to show it was conditional; and if that had been so, it would have been wrong. But I am of opinion that the evidence showed that in fact there was never any agreement at all . . . If it be proved that in fact the paper was signed with the express intention that it should not be an agreement, the other party cannot fix it as an agreement upon those signing. The distinction in point of law is that evidence to vary the terms of an agreement in writing is not admissible, but evidence to show that there is not an agreement at all is admissible."

In this view the other judges, including *Lord* Campbell, *Chief Justice*, concurred, holding that it having been explained to the plaintiff that the defendants did not intend the paper to be an agreement until the engineer had been consulted, and his approval obtained, and was signed only because it was not convenient for them to remain, it was therefore no agreement, the plaintiff having assented to this and received the writing on these terms.

[597] The same principle was announced in the Court of Common Pleas in *Davis* v. *Jones*, 17 C. B. 625, in which the distinction is clearly stated by *Chief Justice* Jervis, between evidence which, although parol, shows the written agreement was not to take effect until certain other things were done, as that rent should not commence running till certain repairs were completed (although the instrument was signed and delivered) and evidence which contradicts or varies the meaning of the instrument itself. This is concurred in by Cresswell and Crowder, *JJ.*

Later, in 1861, in *Wallis* v. *Littell*, 11 C. B. N. S. 369, the same court laid down the same doctrine in regard to an assignment of a lease of a farm which had been made by a tenant to a third party, and the instrument delivered, but with an agreement that it should not take effect until the consent of the landlord was procured. The latter refused his consent, and the court held that the assignment of the lease, although executed and delivered, had never become operative.

The principle was acted upon, and these authorities cited and affirmed, in the case of *Wilson* v. *Powers*, 131 Mass. 539, as late as 1881.

The doctrine was asserted in this court as early as 1808, in the case of *Pawling* v. *U. S.* 8 U. S. 4 Cranch, 219 [2:601], where it was held, in a suit upon a collector's bond, that the sureties who signed it could prove by parol evidence that they did so on an express agreement that they were not to be bound until other persons who were named became bound also by signing the bond.

Without farther examination of authorities, we are of opinion that the case before us comes within the principle asserted by those we have referred to, and *the judgment of the Circuit Court is, therefore, affirmed.*

LOUIS B. SHIELDS, Admr. of EMILY HOYT, Deceased, *Appt.* [584]

v.

ANNA HANBURY *et al.*

(See S. C. Reporter's ed. "*Hoyt* v. *Hanbury*," 584-585.)

Suit for false representations—evidence

1. In a suit in equity to set aside a contract and conveyances, by which lands were exchanged, for false and fraudulent representations, where the evidence shows that, in making the exchange, no reliance was placed upon the representations, but that the party acted upon his own judgment and upon information obtained by him from third persons—*held*, that no ground is shown for maintaining the suit.

2. A letter, found in the record as part of the evidence and certified by the clerk to have been filed on the same day as the other exhibits, where the record does not show that any objection was taken to its admission at the hearing before the court, must, under Rule 13 of this court, be deemed to have been admitted by consent.

[No. 109.]

Submitted Dec. 6, 1888. Decided Dec. 17, 1888.

APPEAL from the decree of the Circuit Court of the United States for the Northern District of Illinois, dismissing a bill to set aside a contract and conveyances for false representations. *Affirmed.*

The facts are stated in the opinion.

Messrs. Theo. E. Davis, and **H. C. Cady**, for appellant.

(No counsel appeared for appellees.)

Mr. Justice **Gray** delivered the opinion of the court:

The bill in equity in this case was filed by Emily Hoyt against Anna Hanbury and Miner N. Knowlton, to compel Knowlton, the plaintiff's brother and attorney in fact, to account for money intrusted by her to him, and by him invested in land in Chicago, Illinois; as well as to set aside a contract and conveyances executed by him and by Mrs. Hanbury, by which that land was exchanged for land at Clarendon Hills, in the neighborhood of Boston, Massachusetts, upon the ground that he was induced to enter into the contract and to make the ex- [585] change by her false and fraudulent representations as to the situation and value of the land in Massachusetts. The circuit court entered a money decree against Knowlton, and dismissed the bill as against Mrs. Hanbury, and an appeal taken by the plaintiff is now prosecuted by her administrator.

On examination of the evidence, and especially the testimony of Knowlton and Mrs. Hanbury, and the letters written by Knowlton before and after the exchange, this court concurs in the opinion, expressed by the Circuit Judge, that Knowlton had had some experience as a dealer in real estate, and was quite capable of taking care of his own interests; that in making the exchange he did not rely upon what was said by Mrs. Hanbury, but acted upon his own judgment and upon information obtained by him from third persons; and consequently that no ground is shown for maintaining the bill. As the case turns upon a pure question of fact, depending upon conflicting evidence, and can be of no value as a precedent,

further discussion for the testimony would be useless.

In the brief for the appellant, it is objected that one letter, written by Knowlton to Mrs. Hanbury after the exchange, which strongly supports the conclusion below, cannot be considered, because it was never offered in evidence. But this objection is not open to the appellant. The letter is found in the record as part of the evidence taken before the master, and is certified by the clerk to have been filed on the same day as other exhibits specifically referred to in Mrs. Hanbury's deposition, and the record does not show that any objection was taken to its admission at the hearing before the court. It must, therefore, under Rule 13 of this court, be deemed to have been admitted by consent.

Decree affirmed.

691] GEORGE D. CRAGIN, *Appt.*,

v.

CHRISTIAN L. POWELL *et al.*

(See S. C. Reporter's ed. 691-700.)

Surveys of public lands—resurveys—error in survey—action to fix boundary.

1. The power to make and correct surveys of the public lands belongs to the political department of the government, and while the lands are subject to the supervision of the General Land Office, its decisions in such cases are unassailable by the courts, except by a direct proceeding.

2. The courts have power to protect the private rights of a party who has purchased lands in good faith from the government against the interferences or appropriations of corrective resurveys, made by the Land Department, subsequent to such purchase.

3. Where the appellee, a surveyor, while employed by appellant to make a survey of his plantation, thought he discovered an error in the public lands claimed by appellant, by which it would appear that such lands were not in fact situated on Bayou Four Points as officially surveyed, and induced a third party to obtain the patent for the land which he, the appellee, then purchased from him, knowing that it had been possessed and cultivated by the appellant for a long period of years, a court of equity will not readily enforce an advantage thus obtained.

[No. 41.]

Argued Oct. 26, 1888. Decided Dec. 17, 1888.

APPEAL from a decree of the Circuit Court of the United States for the Eastern District of Louisiana, fixing a boundary line between two estates. *Reversed.*

The facts are stated in the opinion.

Messrs. **J. D. Rouse** and *Wm. Grant*, for appellant:

Courts of equity are not bound to assist a party in obtaining an unconscionable advantage over another.

Miss. & M. R. Co. v. *Cromwell*, 91 U. S. 643 (23: 367); *Taylor* v. *Brown*, 9 U. S. 5 Cranch, 234 (3: 88).

It is a sufficient act of possession if a person enters upon land under color of title and cuts wood or raises a crop.

Ellicott v. *Pearl*, 35 U. S. 10 Pet. 412 (9: 475).

Possession is acquired *corpore et animo*. One who enters a farm acquires the possession of the whole, though he can occupy but a small spot.

Henderson v. *St. Charles Church*, 7 Mart. N. S. 122.

The cutting of wood under claim of title is an act of possession.

Baker v. *Towles*, 11 La. 439.

Cultivation and inclosure are not necessary to constitute possession.

Brobst v. *Brock*, 77 U. S. 10 Wall. 519 (19: 1002); *Green* v. *Witherspoon*, 37 La. Ann. 751.

Prescription, says the Supreme Court of Louisiana in *Pepper* v. *Dunlap*, 9 La. Ann. 137, is a mode of acquiring property under article 3457 of the Civil Code.

Under the Spanish Law property could be acquired by prescription against the Crown.

Sanchez v. *Gonzales*, 11 Mart. O. S. 210; *Mitchel* v. *U. S.* 34 U. S. 9 Pet. 760 (9: 283).

In the Civil Code of Louisiana there is no exception in favor of the State.

Mr. **J. S. Whitaker** for appellees. [692]

Mr. Justice **Lamar** delivered the opinion of the court:

The appellees, Christian L. Powell, Joseph O. Ayo, and Ludger Gaidry, on the first of November, 1880, brought an action of boundary in the state court against the appellant, George D. Cragin, praying for a judgment of the court to fix the boundaries between certain lands, the property of appellees, and the contiguous lands belonging to appellant, and that he be ordered to deliver to appellees possession of the lands claimed and set forth in their petition.

On the 12th of July, 1880, the cause was removed into the Circuit Court of the United States, on the ground of diverse citizenship.

The answer of appellant sets up that he and his grantors, who had acquired the lands from original patentees, had been in public, peaceable and continuous possession of the lands included in this deed by well defined boundaries [693] for more than thirty years, and without notice of the claims of any person whatsoever; and that it is unnecessary to fix or establish any boundaries as prayed in the petition.

On the second of May, 1881, on motion of counsel for appellees, the court appointed a surveyor, for the purpose of ascertaining and fixing the boundary lines between the properties of the respective parties litigant, and ordered him to report his proceedings within reasonable time. By mutual consent of parties, Benjamin McLeran was selected by the court as such surveyor.

On June 6, 1881, McLeran filed his report of the survey made by him, and its results. From this report it appears that the township and sections in which the lands of the parties are located were officially surveyed in 1837 by one G. W. Connelly, as part of the public domain, and that the plat of such survey was filed in the United States Land Office of the district; that he considered this survey of Connelly so incorrect, and the traces of its lines and corners so difficult to identify, that he was unable to locate any proper line between the lands in question, except upon the basis of a resurvey of the entire township, in accordance with certain corrective resurveys of adjoining townships, which had been made in 1850, and succeeding years, by one Joseph Gorlinski, a Deputy

United States Surveyor. In this view, and guided by the theory of these corrective surveys, McLeran proceeded to run a line which he considered the proper boundary between the lands in question, and recommended its adoption to the court "as substantially such a line as would have been run had the whole township been resurveyed at the time when Deputy Surveyor Gorlinski was resurveying the adjoining townships." With this report he filed two maps: No. 1. a map of his own survey; and No. 2, a map designed to exhibit the discrepancies between the Connelly survey, and the survey of Joseph Gorlinski and that of McLeran himself. These discrepancies are: (1) by the Gorlinski and the McLeran surveys the township lacked half a mile of being six miles square, the eastern tier of sections thereof losing fully one half of the area given by them in [694] the official plat, which official survey establishes a full township as prescribed by law; (2), by Connelly's plat "a bayou, known as Bayou Four Points," is located on appellant's lands, whilst by McLeran's map that bayou is located on the lands of appellees. In his supplemental report McLeran says "It appears that Bayou Four Points was erroneously reported by the original survey." The report also says: "The ridges on either side of the bayous are composed of a rich, black, loamy soil, . . . and when put under cultivation become the best sugar producing lands in the South. The far greater portion of the township consists of a marsh, . . . worthless for cultivation."

The line recommended by McLeran places the lands of the appellees where those of the appellant are located by the official survey, and thus gives to the former the rich ridges along the bayous now in the possession of the latter.

The appellant was required to show cause by the 19th of November, 1881, why the report of McLeran should not be approved and homologated as being a true and correct survey in the premises. Thereupon the court, upon motion of the appellant, and against the opposition of the appellees, ordered that the cause be placed on the equity docket and proceed as in equity. Opposition to the report was afterwards duly filed, alleging that if approved the appellant would be deprived of lands to which he held title through mesne conveyances from United States patents, and of which he and his grantors had held possession for thirty years and upwards.

An amended answer by appellant and replication by appellees having been filed, the cause was put at issue. The court, upon the pleadings and evidence, confirmed the report of the surveyor, and rendered a decree fixing the boundary line between the two estates according to the prayer of the original petition.

The primary object of the action of boundary, under the Civil Code of Louisiana, is to determine and fix the boundary between contiguous estates of the respective proprietors. The provision of the Code in article 845, and other provisions under title 5th of the Code, [695] that the limits must be fixed according to the titles of the parties, are held by the Supreme Court of Louisiana to apply to cases in which neither party disputes the title of his antagonist. *Sprigg* v. *Hooper*, 9 Rob. 258; *Zeringue* v. *Harang*, 17 La. 349; *Blanc* v. *Cousin*, 8 La. Ann. 71. The title to the property is not allowed to be litigated in this action, whose purpose is to fix a line or boundary between adjoining claims. When, therefore, in the course of the proceedings in this case, the surveyor appointed to survey and fix a boundary between the respective properties of the parties made a report, alleging mistakes in the official survey, and recommending a line, the effect of which, if adopted, would eject the appellee from the lands held by him under a claim of valid title, the court below ordered the case to be placed upon the equity side of the docket—thus bringing, it was supposed, within its equitable cognizance the essential rights of the parties, unaffected by the special limitations governing the action of boundary.

To determine the grounds upon which this court is asked to reverse the decree of the court below, it is necessary to advert in some detail to the facts as shown by the record.

In 1844, the United States issued to one Bach patents to certain portions of sections 10, 15 and 22 of township 20 south, range 17 east, in the southeast district west of the river, according to the official plat of the survey of said lands returned to the General Land Office of the United States by the surveyor-general.

The appellant is the owner of the lands thus patented to Bach; and for many years he, and those under whom he claims, have been in possession of the lands, which, according to the official survey, were embraced in said patents.

In April, 1878, one Samuel Wolf purchased from the State of Louisiana portions of the same sections 10, 15, and 22, and also portions of sections 14 and 23 of the same township, all adjoining the lands of the appellant. These lands last described were given to the State as swamp lands, under the Act of the 20th of March, 1849, and were noted as such on the official plat referred to above. In 1879, Wolf sold this property to Powell, one of the appellees, who in May, 1880, sold an undivided half [696] to the other two appellees; and in the same year they brought this action of boundary.

In support of the decree of the court below it is urged by counsel for appellees that "There is nothing in the patents or title on record to show, by word or otherwise, any distinct calls, designating their location; nothing given descriptive of the property, except the township, the section and the range; nothing to describe the lands patented or conveyed, either as high lands, swamp or overflowed lands, or as having upon them any water course or bayou." He admits, however, that the plat in evidence contains upon its face the names of certain bayous, as "Bayou Cailliou," "Grassy," "Salé," and others; but says "that the original patents and conveyances, apart from the plat, are silent upon the subject, except that the defendant's title calls for land on Bayou Grand Cailliou."

In this view, which seems to be the one on which the court below must have acted, the learned counsel is mistaken. It is a well settled principle that when lands are granted according to an official plat of the survey of such lands, the plat itself, with all its notes, lines, descriptions and landmarks, becomes as much a part of the grant or deed by which they are conveyed, and controls so far as limits are con-

cerned, as if such descriptive features were written out upon the face of the deed or the grant itself.

The patent of the State of Louisiana to Wolf was of the east half of southeast quarter of section 10, east half of east half of section 15, etc., "containing $635\frac{52}{100}$ acres tidal overflow according to the official plat of the survey of said lands in the state land office." By that plat the portions of the sections patented to Wolf were noted as tidal overflow; and as such they had been certified to the State by the General Land Office and the Interior Department. By the same plat Bayou Four Points was noted as running through those portions of sections 10, 15 and 22 which had been patented to Bach, who doubtless entered them, and obtained patents for them, because of the high lands so noted on this bayou.

Equally unsound is the contention on behalf of the appellees that "The land was sold and [697] patented not as pointing to any bayou, nor with reference to the character of the land, whether as swamp or high land." The Statutes of the United States make it the duty of the surveyor-general to note "all water courses over which the line he runs may pass; and also the quality of the land." R. S. § 2395, ¶ 7. And they provide that a copy of the plat of survey shall be kept for public information in the office of the Surveyor-General, in the offices where the lands are to be sold, and also in the office of the Commissioner of Public Lands. They further provide that "The boundary lines actually run and marked in the surveys returned by the Surveyor-General shall be established as the proper boundary lines of the sections or subdivisions for which they were intended, and the length of such lines, as returned, shall be held and considered as the true length thereof." R. S. § 2396, ¶ 2.

The surveyor, McLeran, insists not only in his original report of his survey, but also in his second explanatory report, and in his oral evidence, that this governmental survey is incorrect; some of it more incorrect than the rest, but especially erroneous in the length of its lines and in the location of Bayou Four Points on the portions of the sections patented to the appellees. The plat, he reports, is totally inconsistent with that of the governmental survey, and should have been rejected by the court below.

Whether the official survey made by Connelly is erroneous, or should give way to the extent of its discrepancies to the survey reported by McLeran, is a question which was not within the province of the court below, nor is it the province of this court to consider and determine. The mistakes and abuses which have crept into the official surveys of the public domain form a fruitful theme of complaint in the political branches of the government. The correction of these mistakes and abuses has not been delegated to the judiciary, except as provided by the Act of June 14, 1860, 12 Stat. at L. 33, in relation to Mexican land claims, which was repealed in 1864, 13 Stat. at L. 332. From the earliest days matters appertaining to the survey of public or private lands have devolved [698] upon the Commissioner of the General Land Office, under the supervision of the Secretary of the Interior. R. S. § 453. The commissioner, in the exercise of his superintendence over Surveyors-General, and of all subordinate officers of his bureau, is clothed with large powers of control to prevent the consequences of inadvertence, mistakes, irregularity and fraud in their operations. R. S. § 2478; *Bell* v. *Hearne*, 60 U. S. 19 How. 252 and 262 [15:614]. Under the authority of specific appropriations by Congress, for that purpose, the resurveys of public lands have become an extensive branch of the business of the General Land Office.

In 1848, the Surveyor-General of Louisiana urgently recommended a resurvey of certain townships in the district of Louisiana, and of all lands fronting on Bayou Cailliou, in Terre Bonne, which had been surveyed by F. G. Connelly and other named surveyors. It was in accordance with this recommendation that Gorlinski made the resurveys above referred to. But the Commissioner of the General Land Office very soon put an end to this system of resurveys, and in a letter to the Surveyor-General, which throws no little light upon the subject, he says:

"The making of resurveys or corrective surveys of townships once proclaimed for sale is always at the hazard of interfering with private rights, and thereby introducing new complications. A resurvey, properly considered, is but a retracing, with a view to determine and establish lines and boundaries of an original survey . . . but the principle of retracing has been frequently departed from, where a resurvey (so called) has been made and new lines and boundaries have often been introduced, mischieviously conflicting with the old, and thereby affecting the areas of tracts which the United States had previously sold and otherwise disposed of."

It will be perceived that McLeran's survey not only disregards the old original survey making new lines and boundaries, but does so in contravention of the order from the Land Office that those resurveys should not be extended into this township.

That the power to make and correct surveys of the public lands belongs to the political department of the government, and that, whilst [699] the lands are subject to the supervision of the General Land Office, the decisions of that bureau in all such cases, like that of other special tribunals upon matters within their exclusive jurisdiction, are unassailable by the courts, except by a direct proceeding; and that the latter, have no concurrent or original power to make similar corrections, if not an elementary principle of our land law, is settled by such a mass of decisions of this court that its mere statement is sufficient. *Steel* v. *St. Louis Smelting & Ref. Co.* 106 U. S. 447, 454-5 [27: 226, 229] and cases cited in that opinion; *U. S.* v. *San Jacinto Tin Co.* 10 Sawy. 548, affirmed in 125 U. S. 273 [31: 747]; *U. S.* v. *Flint*, 4 Sawy. 61, affirmed in *U. S.* v. *Throckmorton*, 98 U. S. 61 [25: 93]; *Henshaw* v. *Bissell*, 85 U. S. 18 Wall. 255 [21: 835]; *Stanford* v. *Taylor*, 59 U. S. 18 How. 409 [15:453]; *Haydel* v. *Dufresne*, 58 U. S. 17 How. 23 [15: 115]; *West* v. *Cochran*, 58 U. S. 17 How. 403 [15: 110]; *Jackson* v. *Clark*, 26 U. S. 1 Pet. 628 [7:290]; *Niswanger* v. *Saunders*, 68 U. S. 1 Wall 424 [17: 599]; *Snyder* v. *Sickles*, 98 U. S. 203 [25: 97]; *Frasher* v. *O'Connor*, 115 U. S. 102 [29: 311]; *Gazzam* v. *Phillips*, 61 U. S. 20

How. 372 [15: 958]; *Pollard* v. *Dwight*, 8 U. S. 4 Cranch, 421 [2: 666]; *Taylor* v. *Brown*, 9 U. S. 5 Cranch, 234 [3: 88]; *McIver* v. *Walker*, 13 U. S. 9 Cranch, 177 [3: 694]; *Craig* v. *Radford*, 16 U. S. 3 Wheat. 594 [4: 467]; and *Ellicott* v. *Pearl*, 35 U. S. 10 Pet. 412 [9: 475].

The reason of this rule, as stated by *Justice* Catron in the case of *Haydel* v. *Dufresne*, is "that great confusion and litigation would ensue if the judicial tribunals were permitted to interfere and overthrow the public surveys on no other ground than an opinion that they could have the work in the field better done and divisions more equitably made than the department of public lands could do."

It is conceded that this power of supervision and correction by the Commissioner of the General Land Office is subject to necessary and decided limitations. Nor is it denied that, when the Land Department has once made and approved a governmental survey of public lands (the plats, maps, field notes and certificates all having been filed in the proper office), and has sold or disposed of such lands, the courts have power to protect the private rights of a party who has purchased, in good faith, from the government against the interferences [700] or appropriations of corrective resurveys made by that department subsequently to such disposition or sale. But there is nothing in the circumstances of this case which brings it within any such limitations.

The appellee, Powell, is a surveyor, who, in the year 1877, while employed by appellant to make a survey of his plantation, thought he discovered an error in the public lands, whereby it would appear that his lands were not in fact situated on Bayou Four Points. From his own evidence it is shown that he induced Wolf to obtain the patent from the State of Louisiana for the land which he, the said appellee, purchased from him. When he purchased this land from Wolf he knew that the tracts to which he was laying claim had been possessed and cultivated by the appellant for a long period of years.

An advantage thus obtained, a court of equity will not readily enforce. As was said in *Taylor* v. *Brown*, 9 U. S. 5 Cranch, 234 [3: 88]: "The terms of the subsequent location prove that the locator considered himself as comprehending Taylor's previous entry within his location . . . He either did not mean to acquire the land within Taylor's entry, or he is to be considered as a man watching for the accidental mistakes of others, and preparing to take advantage of them. What is gained at law by a person of this description, equity will not take from him; but it does not follow that equity will aid his views."

For the reasons above stated, *the decree of the Circuit Court is reversed*, with directions to dismiss the petition of the plaintiffs below at their costs. *So ordered.*

---

[686] MICHAEL STACHELBERG ET AL., Copartners, as STACHELBERG & Co., *Appts.*

v.

ERNESTO PONCE.

(See S. C. Reporter's ed. 686-691.)

Trademark — when action for injunction not sustained.

1. The adoption by plaintiff of the words "La Normandi" as a trademark, in his business of manufacturing and selling cigars of a certain kind, cannot take away the right previously acquired by the public in the use of the words "La Normanda" as indicating a particular kind of cigars.

2. In an action to restrain the use of the words "La Normanda" as a trade-name in manufacturing and selling cigars, where it appears that for several years before the adoption of the words "La Normandi" as a trademark by plaintiff in the same trade, the former words had been used by defendants in their business for a particular brand of cigars, *held* that the plaintiff is not entitled to the relief asked.

[No. 51.]

Argued Oct. 31, 1888. Decided Dec. 17, 1888.

APPEAL from a decree of the Circuit Court of the United States for the District of Maine, dismissing an action to enjoin the use of a trademark. *Affirmed.*

Reported below, 28 Fed. Rep. 430.

Statement by *Mr. Justice* **Harlan**:

This is a trademark case. The principal relief asked by the appellants, who were the plaintiffs below, is a decree enjoining the appellee, who was the defendant below, his agents and servants, from using as a trade-name in their business of manufacturing and selling cigars, the words "Normandie," or "E. P. Normanda," or "La Normanda," or "Normanda;" such use of those words being it is alleged, a violation of the right of the plaintiffs to the exclusive use of the words "La Normandi" and "Normandi" in their business of manufacturing and selling cigars of a certain kind.

It is alleged, among other things, that one Asher Bijur, of New York, was engaged from 1858 to 1865 in manufacturing and packing cigars of various grades and shapes, some of which, of superior quality, were called "La Normandi," and were put up in boxes containing two hundred and fifty each, labeled and branded with those words; that, being of fine stock, skillfully made, and of a shape that pleased the eye, his cigars, of that kind, became widely known, gaining great favor with the public, particularly in the New England States; that the first use by any one, engaged in the [687] manufacture, packing, or sale of cigars, of the words "La Normandi" or "Normandi" was by him, those words constituting his trademark for cigars of the above description; that on or about February, 1865, he assigned, sold, transferred and conveyed to the plaintiff, Michael Stachelberg, his heirs and assigns, all his right, title and interest in and to the exclusive use of the words "La Normandi" and "Normandi;" that on or about January 1, 1873, the plaintiffs formed a partnership under the firm name of M. Stachelberg & Co., said trademark becoming their joint property; that since said assignment they have been engaged in manufacturing cigars under the names "La Normandi" and "Normandi," bestowing great care upon their packing; putting them up in bunches (each bunch being tied with a peculiar colored and striped ribbon), and offering them for sale in boxes containing two hundred and fifty cigars each, branded with the words "La Normandi;" and that they have incurred great expense in bringing such cigars so named to public attention, whereby large profits have accrued from their sale.

The bill also states that on the 19th of Feb

ruary, 1876, the plaintiffs deposited in the Patent Office at Washington the name "Normandi" as a trademark, and March 7, 1876, received from that office a certificate, showing such record; that after said assignment, and up to the date of and since such deposit, they have used the word "Normandi," with the prefix "La," and that by virtue of such assignment, and of their uninterrupted use of the words "La Normandi," they acquired and have the sole and exclusive right to use them, as a trademark.

It is further alleged that since January 1, 1881, the defendant Ponce has been manufacturing, and causing to be manufactured, and offering for sale, cigars substantially similar in shape, size, and outward appearance, to their La Normandi cigars, and has put them in boxes of the same pattern, general shape and size, and tied with ribbons colored and striped and resembling the ribbons used by them, his boxes being branded some with "Normanda," some [688] "E. P. Normanda," and others "Normandie;" whereby the defendant has fraudulently imposed and, unless restrained from so doing, will continue to impose upon the public his cigars as as the real "La Normandi" cigars, manufactured, put up, and sold first by Bijur and afterwards by the plaintiffs, and whereby, also, great and irreparable injury will be done to the plaintiffs in their business.

The defendant admits in his answer that he has sold cigars under the brand or label of "La Normanda;" but those words, he alleges, have always been accompanied on the boxes or packages containing them by the words E. P., or E. Ponce, or Ernesto Ponce, and sometimes by the words "Portland, Maine," thus indicating the manufacturer and the place at which his cigars were made; denying that his trademark infringes the alleged trade-name of the plaintiffs, or that he intends to use any tradename of theirs, he insists that Bijur did not, and could not have an exclusive right to the words "La Normandi" as a trademark; that the words "Normandi" and "Normanda" are of foreign origin and of different significations, the former being a geographical and the latter a personal name; that the word "Normanda" has long been publicly used as a name or designation for cigars, was stamped upon boxes and packages containing them long prior to any of the alleged rights of the complainants; and that such terms were in public use as a designating mark for a manufacture of cigars at Havana as early as 1861, and were so used in that year as a brand for cigars put up and sold by him, as well as by others. He contends that there is nothing in the shape or size of his cigars, or in the manner in which he bundles or ties them up, which can be exclusively appropriated by the plaintiffs. In respect to the use of the words "La Normandie," he denies that he has ever manufactured, or ordered to be manufactured, any cigars branded with those words, although in the course of his business he has bought and sold other and common brands of cigars marked in that way.

It was in proof that the alleged trademark, La Normandi, was used by the assignor of the [689] plaintiffs as part of a label that consisted of those words, printed at the top thereof; a picture, immediately below those words, of the interior of a cigar factory while occupied by the employés of the manufacturer; and a facsimile of Bijur's signature, together with the initials "A. B." The label used by the plaintiffs consists of the words La Normandi at its top, beneath those words a picture of the interior of a cigar factory as above stated, and at the bottom of the picture the following words and a facsimile signature of M. Stachelberg, to wit: "Genuine La Normandi Segars are branded with my initials and the labels inside are signed in my own handwriting. M. Stachelberg. Entered according to Act of Congr. A. D. 1866 by M. Stachelberg in the Clerk's Office of the Dis. Court of the Southern District of N. Y."

By the decree below the bill was dismissed, upon the ground that when a right to the use of a trademark is transferred, either by the act of the original owner or by operation of law, "The fact of transfer should be stated in connection with its use; otherwise a deception would be practiced upon the public." *Stachelberg* v. *Ponce*, 23 Fed. Rep. 430.

Mr. **Rowland Cox,** for appellants:

When the trademark is affixed to articles manufactured at a particular establishment, and that establishment is transferred to others, the right to the use of the trademark may be lawfully transferred with it.

Kidd v. *Johnson*, 100 U.S. 617 (25: 769); *Hoxie* v. *Chaney*, 143 Mass. 592, 8 New Eng. Rep. 709; *Russia Cement Co.* v. *Le Page*, 6 New Eng. Rep. 577; *Dixon Crucible Co.* v. *Guggenheim*, 2 Brewst. 321; *Filkins* v. *Blackman*, 13 Blatchf. 440; *Skinner* v. *Oakes*, 10 Mo. App. 45 (Am. Trademark Cases, Price & Stuart, 472); *Warren* v. *Warren Thread Co.* 134 Mass. 247; *Oakes* v. *Tonsmierre*, 4 Woods, 555; *Morgan* v. *Rogers*, 19 Fed. Rep. 596; *Burton* v. *Stratton*, 12 Fed. Rep. 696; *Hegeman* v. *Hegeman*, 8 Daly (N.Y.) 5 and cases cited; *Fulton* v. *Sellers*, 4 Brewst. 42.

The right to use the trademark of the original proprietor passes, with the good will, by operation of law, to an executor or to the assignee of a bankrupt.

Hegeman v. *Hegeman*, 8 Daly (N.Y.) 1.

If the mark is of such a nature that it can be made the subject of a lawful assignment it passes with the sale of the good will by the original proprietor.

Glen & H. Mfg. Co. v. *Hall*, 61 N.Y. 232; *Ainsworth* v. *Walmesley*, 35 L. J. Ch. 355; *McLean* v. *Fleming*, 96 U. S. 249, 250 (24: 830); *Russia Cement Co.* v. *Le Page*, 6 N. Eng. Rep. 577, and cases cited.

The infringement is too plain to admit of a difference of opinion.

Celluloid Mfg. Co. v. *Cellonite Mfg. Co.* 32 Fed. Rep. 94; *Hier* v. *Abrahams*, 82 N. Y. 519.

Mr. **William Henry Clifford,** for appellee:

No man can appropriate to himself, as a trademark on his manufacture, any word or symbol in common use as a designation of a class of the same kind of goods.

Singer Mfg. Co. v. *Stanage*, 6 Fed. Rep. 282; *Sherwood* v. *Andrews*, 5 Am. L. Reg. N. S. 588.

The word *Normanda*, such as used by the respondent, is an old and common mark or designation for the kind and make of cigars he puts up. It is older than the word *Normandi*, in such connection.

Re Hyde, Seb. Dig. 361; *Re Hall & Co.* Id. 363; *McLean* v. *Fleming*, 96 U. S. 245 (24: 828); *Del. & H. Canal Co.* v. *Clark*, 80 U. S. 13 Wall. 322 (20: 583).

There is here not only no attempt to pass off the goods as those of another, but no possibility of it; and it is only on this ground that chancery interposes to protect the complainant under an alleged trademark right.

McLean v. *Fleming*, and *Del. & H. Canal Co.* v. *Clark*, *supra*.

No argument can be drawn from the similarity of the two words *Normanda* and *Normandi*.

Hardy v. *Cutter*, 8 Pat. Off. Gaz. 468.

It is essential to a lawful trademark, that it shows the origin and manufacture of the goods in some way.

Upton, Trademarks, 136; *Del. & H. Canal Co.* v. *Clark*, *supra*; *Leather Cloth Co.* v. *Am. Leather Cloth Co.* 11 Jur. N. S. 513; Cox, Am. Trademark Cases, 699; *Manhattan Medicine Co.* v. *Wood*, 108 U. S. 223 (27: 708).

If anyone imitates a trademark so as to sell his own goods as and for the goods of the one possessed of the trademark, then he takes his property without right, and so is liable to the lawful owner of the trademark.

Upton, Trademarks, 22.

A trademark cannot consist of word or words alone, and be a lawful trademark; it must have (being a purely fanciful name) something else to complete the legal requirements of a trademark; it must have some accompanying words to denote the origin or manufacture of the goods, or complainants must show that the words *La Normandi* have come to signify a manufacture of this particular brand of cigars and become associated with their place of business.

Morrison v. *Case*, 2 Pat. Off. Gaz. 544; *McLean* v. *Fleming*, 96 U. S. 245 (24: 828).

A trademark in order to be valid, must in some way show the origin and ownership of the goods to which it is attached.

Del. & H. Canal Co. v. *Clark*, 80 U. S. 13 Wall. 322 (20: 583).

All who use trademarks indicating that the articles were originally manufactured or owned by others, are practicing an imposition upon the public. Every assignee or purchaser who has the trademark of the original proprietor, without indicating that he is the assignee or purchaser, is in this position.

Sherwood v. *Andrews*, 5 Am. L. Reg. N. S. 588; *Partridge* v. *Menck*, 2 How. App. Cas. 547; *Manhattan Medicine Co.* v. *Wood*, *supra*; *Siegert* v. *Abbott*, 61 Md. 286.

Mr. Justice **Harlan** delivered the opinion
[690] of the court:

We are of opinion that the plaintiffs are not entitled to an injunction restraining the defendant from using the words "La Normanda" or "Normanda" as part of a brand or label for cigars manufactured or sold by him. If it was satisfactorily shown that those words were not used in the trade to designate a particular kind of cigars, until after the words "La Normandi" or "Normandi" had become a part of the established trademark of Bijur, it might be necessary to consider whether the former words, taken in connection with the entire label or brand used by the defendant, his mode of packing his cigars, and their size and appearance, were calculated to deceive the public by inducing the belief that they were the same cigars as La Normandi cigars, manufactured and sold by Bijur, and by the plaintiffs. But no such case is made by the proof. On the contrary it appears, by a preponderance of evidence: 1, that the mode in which Bijur, and after him Stachelberg & Co., packed their La Normandi cigars, the kind of boxes used by them, the number of cigars in each bunch, the particular color of the ribbon or tape around each bunch of twenty-five, the putting of two hundred and fifty cigars in each box, and the size and shape of the cigars, were all old in the trade, preceding, in point of time, the adoption by Bijur of the words "La Normandi" as part of his trade-name; 2, that for several years prior to the adoption by Bijur of his trademark, and from about that date until the bringing of this suit, cigars resembling the La Normandi cigars, in size and shape, in the color of the ribbon or tape by which the bunches of twenty-five were tied, and in the manner in which they were put up and packed, were and have been made and sold, in quite large numbers, in different parts of this country, under the name of "La Normanda." An effort is made to discredit the evidence establishing these facts, by showing by witnesses, engaged for many years in the business of [691] manufacturing and selling cigars, that they never knew or heard of any being sold under the name of "La Normanda." But the evidence to that effect is entirely negative in its character, and is not sufficient to overcome the direct, positive testimony of witnesses, some of whom, as early as 1853, actually manufactured and sold "La Normanda" cigars of the kind above described, while others remember that domestic cigars, under that designation, were in the market before Bijur commenced the manufacture of the "La Normandi" cigars. In this view of the evidence the plaintiffs are not entitled to the relief asked. The adoption by Bijur of the words "La Normandi," as part of his trademark, could not take away the right previously acquired by the public in the use of the words "La Normanda" as indicating a particular kind of cigars.

This conclusion is sufficient to dispose of the case, and renders it unnecessary to consider other grounds upon which, it is insisted, the decree below should be sustained. *The decree is affirmed.*

---

[673]

UNITED STATES, *Appt.*,

v.

THE IRON SILVER MINING CO. ET AL.

(See S. C. Reporter's ed. 673-686.)

Gold and silver mines—patent obtained by false representations—burden of proof—placer claim—lode claim—exception in statute—what included in patent—known veins or lodes—application—timber—sufficiency of improvements.

1. It is the policy of the Government to favor the development of mines of gold and silver and other metals, and every facility is afforded for that pur-

pose; but it exacts a faithful compliance with the conditions required.

2. Misrepresentation knowingly made by the applicant for a patent will justify the Government in proceeding to set it aside. The Government has the right to demand a cancellation of a patent of the United States when obtained by false and fraudulent representations.

3. The burden of proof in such cases is upon the Government. The presumption attending the patent, that it was issued upon sufficient evidence that the law had been complied with by the officers of the Government charged with the alienation of public lands, can only be overcome by clear and convincing proof.

4. The term "placer claim," as used in section 2333 R. S., means ground that includes valuable deposits not in place, that is, not fixed in rock, but which are in a loose state. By "veins or lodes," as there used, are meant lines or aggregations of metal embedded in quartz or other rock in place. A lode may and often does contain more than one vein.

5. The amount of land which may be taken up as a placer claim and the amount as a lode claim, and the price per acre to be paid to the Government in the two cases, when patents are obtained, are different; and the rights conferred by the respective patents, and the conditions upon which they are held, are also different.

6. The exception of the statute cannot be enlarged in the patent. The statute only excepts veins or lodes "claimed or known to exist," at the time the application is made for the patent, and not at the date of the patent.

7. When such a vein or lode is known to exist within the boundaries of the placer claim, the application for a patent which does not include also an application for the vein or lode is to be construed as a conclusive declaration that the claimant has no right of possession to it; but where the existence of a vein or lode in a placer claim is not known at the time of the application for a patent, that instrument will convey all valuable mineral and other deposits subsequently found within the boundaries of the claim.

8. It is not enough that there may have been some indications, by outcroppings on the surface, of the existence of lodes or veins of rock in place bearing gold or silver or other metal, to justify their designation as "known" veins or lodes. To meet that designation the lodes or veins must be clearly ascertained, and be of such extent as to render the land more valuable on that account and justify their exploration.

9. The subsequent discovery of lodes upon the ground, and their successful working, does not affect the good faith of the application. That must be determined by what was known to exist at the time.

10. The existence of a valuable growth of timber on the land does not affect the applicant's claim to a patent for a placer claim.

11. The sufficiency of the work performed and improvements made upon each of the claims patented is sufficiently shown by the certificate of the Surveyor-General of the United States for the State in which the claim is situated.

[No. 82.]

Argued Nov. 15, 1888. Decided Dec. 17, 1888.

APPEAL from a decree of the Circuit Court of the United States for the District of Colorado, dismissing a suit in equity, brought by the United States, to cancel two patents for alleged placer mining claims. *Affirmed.*

Reported below, 24 Fed. Rep. 568.

The facts are fully stated in the opinion.

Mr. **G. A. Jenks,** *Solicitor-General,* for appellant.

Mr. **L. S. Dixon** for appellees.

[674] *Mr. Justice* **Field** delivered the opinion of the court:

This is a suit in equity brought by the United States against the Iron Silver Mining Company, a corporation created under the laws of New York, and James A. Sawyer, a citizen of Colorado, to cancel two patents for alleged placer mining claims, known respectively as the Fanchon Placer claim and the Stinson Placer claim, situated in the County of Lake, Colorado. Both patents were issued to the defendant Sawyer, and the larger part of the claims were subsequently conveyed by him to the defendant corporation.

The Fanchon claim embraces 113 acres and a fraction of an acre. The patent for it bears date November 17, 1881, and was issued upon an entry made April 22, 1880.

The Stinson claim embraces 124 acres and a fraction of an acre. The patent for it bears date June 15, 1881, and was issued upon an entry made April 27, 1880.

The bill for the cancellation of these patents alleges that they were obtained upon false and fraudulent representations that the land embraced by them was placer mining ground, and [675] contained no veins or lodes of quartz or other rock bearing gold or silver or other metal, and that the patentee had performed the work upon each tract required by law to entitle him to enter it as a placer claim; whereas, in fact, the land was not placer mining ground, but land containing sundry veins or lodes of quartz or other rock bearing gold, silver and lead of great value, which was well known to the patentee on his application for the patents; and that the work required to enter the tracts as placer claims had never been performed.

The bill also alleges that the defendant Sawyer had previously made several locations of lode claims on this ground, and that certificates of these locations had been recorded in the office of the recorder of Lake County; that he afterwards entered into a conspiracy with one William H. Stevens and Levi Z. Leiter, of Colorado, to defraud the United States of the lode claims and the timber on the land, of which there was a valuable growth, by obtaining patents of the land as placer ground, for the benefit of those parties and of the defendant, the Iron Silver Mining Company, in which they were interested; that by its terms the defendant Sawyer was to abandon the lode claims and take up the ground as placer claims, and Stevens and Leiter were to advance the necessary funds for that purpose; that when the patents were obtained Sawyer was to receive in consideration of his services in the matter a portion of the claims; and that the patents in question were obtained in execution of this conspiracy.

These allegations are specifically denied by the defendants in their answer, and the proofs in the case were directed to establish them on the one hand and to refute them on the other. If established, the Government could justly demand a cancellation of the patents. The statutes providing for the disposition of the mineral lands of the United States are framed in a most liberal spirit, and those lands are open to the acquisition of every citizen upon conditions which can be readily complied with. It is the policy of the Government to favor the development of mines of gold and silver and other metals, and every facility is afforded for that purpose; but it exacts a faithful compli- [676] ance with the conditions required. There must be a discovery of the mineral, and a sufficient exploration of the ground to show this fact beyond question. The form also in which the

mineral appears, whether in placers or in veins, lodes or ledges, must be disclosed so far as ascertained. Misrepresentation knowingly made as to these matters by the applicant for a patent will afterwards justify the Government in proceeding to set it aside. The Government has the same right to demand a cancellation of the conveyances of the United States when obtained by false and fraudulent representations as a private individual when a conveyance of his lands is obtained in like manner. In this respect the United States, as a landed proprietor, stands upon the same footing with the private citizen. The burden of proof in such cases is upon the Government. The presumption attending the patent, even when directly assailed, that it was issued upon sufficient evidence that the law had been complied with by the officers of the Government charged with the alienation of public lands, can only be overcome by clear and convincing proof. In several cases recently before this court the character and degree of proof required to set aside a patent for land of the United States issued in due form by their officers, where they have had jurisdiction over the subject and have observed the various proceedings preliminary to its issue required by law, have been discussed and determined, and rules laid down which must control in future cases of the kind.

In *Maxwell Land Grant Case*, which was before us at October Term, 1886, this question received careful consideration. 121 U. S. 325, 379, 381 [30: 949, 958, 959]. The court there said, by *Mr. Justice* Miller: "The deliberate action of the tribunals, to which the law commits the determination of all preliminary questions, and the control of the processes by which this evidence of title is issued to the grantee, demands that, to annul such an instrument and destroy the title claimed under it, the facts on which this action is asked for must be clearly established by evidence entirely satisfactory to the court, and that the case itself must be within the class of causes for which such an instrument may be avoided." And again: "We take the general doctrine to be, that when in a court of equity it is proposed to set aside, to annul or to correct a written instrument for fraud or mistake in the execution of the instrument itself, the testimony on which this is done must be clear, unequivocal and convincing, and that it cannot be done upon a bare preponderance of evidence which leaves the issue in doubt. If the proposition, as thus laid down in the cases cited, is sound in regard to the ordinary contracts of private individuals, how much more should it be observed where the attempt is to annul the grants, the patents, and other solemn evidences of title emanating from the Government of the United States under its official seal. In this class of cases the respect due to a patent, the presumptions that all the preceding steps required by the law had been observed before its issue, the immense importance and necessity of the stability of titles dependent upon these official instruments, demand that the effort to set them aside, to annul them, or to correct mistakes in them, should only be successful when the allegations on which this is attempted are clearly stated and fully sustained by proof."

[677]

In *Colorado Coal & Iron Company* v. *United States*, 123 U. S. 307 [31: 182], before us at October Term, 1887, the same subject was considered, and a similar conclusion reached, as to the character and degree of proof necessary to invalidate a patent of the United States. There patents for coal lands were alleged to have been obtained on false and fraudulent papers made by the register and receiver of the local land office, combining with others in a conspiracy for that purpose; but the court, after referring to the doctrine declared in *Maxwell Land Grant Case*, said, by *Mr. Justice* Matthews: "It thus appears that the title of the defendants rests upon the strongest presumptions of fact which, although they may be rebutted, nevertheless can be overthrown only by full proofs to the contrary, clear, convincing and unambiguous. The burden of producing these proofs and establishing the conclusion to which they are directed rests upon the Government. Neither is it relieved of this obligation by the negative nature of the proposition it is bound to establish." Authorities are then cited to show that in some instances the burden of proving a negative rests upon the complaining party; and especially so where the negative allegation involves a charge of fraud against the party whose conduct is complained of, for which it is sought to defeat an estate.

[678]

In this connection a word should be said of a paragraph in the opinion in *Moffat* v. *United States*, 112 U. S. 24, 30 [28: 623, 625]. That was a suit to set aside a patent issued to fictitious parties; and the court, referring to the presumption which is indulged as a protection against collateral attacks upon a patent by third parties, said: "It may be admitted, as stated by counsel, that if, upon any state of facts, the patent might have been lawfully issued, the court will presume, as against such collateral attacks, that the facts existed; but that presumption has no place in a suit by the United States directly assailing the patent and seeking its cancellation for fraud in the conduct of their officers." It was not intended by this language to hold that presumptions in favor of the regularity and lawfulness of patents issued did not apply in suits by the United States to vacate them for fraud; but that the presumption mentioned—that is, that when a patent is assailed collaterally, if it could be sustained upon any state of facts, the court will presume that such facts existed—could not apply in suits by the United States assailing the patent for fraud in the conduct of their officers. This is evident from what immediately follows in the opinion, for the court adds: "In such a suit the burden of proof is undoubtedly, in the first instance, on the Government to show a fatal irregularity or corrupt conduct on their part; but when a case is established, which, if unexplained, would warrant a conclusion against them, the burden of proof is shifted, and they must show such integrity of conduct, and such a compliance with the law, as will sustain the patent." If the presumption mentioned could be admitted, no suit of the kind could be sustained, for facts could be stated which would overthrow the allegations of fraud.

The patents in controversy were issued under sections 2329 and 2333 of the Revised Statutes, which are as follows:

"Sec. 2329. Claims, usually called 'placers,' [679] including all forms of deposit, excepting veins of quartz, or other rock in place, shall be subject to entry and patent, under like circumstances and conditions, and upon similiar proceedings, as are provided for vein or lode claims; but where the lands have been previously surveyed by the United States, the entry in its exterior limits shall conform to the legal subdivisions of the public lands."

"Sec. 2333. Where the same person, association, or corporation is in possession of a placer claim, and also a vein or lode included within the boundaries thereof, application shall be made for a patent for the placer claim, with the statement that it includes such vein or lode, and in such case a patent shall issue for the placer claim, subject to the provisions of this chapter, including such vein or lode, upon the payment of five dollars per acre for such vein or lode claim, and twenty-five feet of surface on each side thereof. The remainder of the placer claim, or any placer claim not embracing any vein or lode claim, shall be paid for at the rate of two dollars and fifty cents per acre, together with all costs of proceedings; and where a vein or lode, such as is described in section twenty-three hundred and twenty, is known to exist within the boundaries of a placer claim, an application for a patent for such placer claim which does not include an application for the vein or lode claim shall be construed as a conclusive declaration that the claimant of the placer claim has no right of possession of the vein or lode claim; but where the existence of a vein or lode in a placer claim is not known, a patent for the placer claim shall convey all valuable mineral and other deposits within the boundaries thereof."

By the term "placer claim," as here used, is meant ground within defined boundaries which contains mineral in its earth, sand, or gravel; ground that includes valuable deposits not in place, that is, not fixed in rock, but which are in a loose state, and may in most cases be collected by washing or amalgamation without milling.

By "veins or lodes," as here used, are meant lines or aggregations of metal embedded in quartz or other rock in place. The terms are found together in the statutes, and both are [680] intended to indicate the presence of metal in rock. Yet a lode may and often does contain more than one vein. In *Iron Silver Mining Company* v. *Cheesman*, 116 U. S. 533 [29:713], a definition of a lode is given, so far as it is practicable to define it with accuracy, and it is not necessary to repeat it. What is important here is that the amount of land which may be taken up as a placer claim and the amount as a lode claim, and the price per acre to be paid to the Government in the two cases, when patents are obtained, are different. And the rights conferred by the respective patents, and the conditions upon which they are held, are also different. R. S. §§ 2320, 2322, 2325, 2333; *St. Louis Smelting & Ref. Co.* v. *Kemp*, 104 U. S. 636, 651 [26:875, 880]; *Iron Silver Min. Co.* v. *Reynolds*, 124 U. S. 374 [31:466].

The patent for the Stinson claim contained the following conditions:

First. That the grant is restricted in its exterior limits to the boundaries of the tract described, and to any veins or lodes of quartz or other rock in place bearing gold, silver, cinnabar, lead, tin, copper, or other valuable deposits, which may hereafter be discovered within said limits, and which are not claimed or known to exist at the date thereof.

Second. That should any vein or lode of quartz or other rock in place bearing gold, silver, cinnabar, lead, tin, copper, or other valuable deposits, be claimed or known to exist within the described premises, at the date thereof, the same is expressly excepted and excluded therefrom.

The patent for the Fanchon placer claim contains similar conditions.

The exception from grant in each patent of any vein or lode of quartz or other rock in place bearing gold, copper, silver, cinnabar, lead, tin, or other valuable deposit, "claimed or known to exist" at the date of the patent within the described premises, is in terms broader than the language of the statute under which the patents were issued. The exception of the statute cannot be thus enlarged. The statute does not except veins or lodes "claimed or known to exist," but only such as are known to exist at the time the application is made for the patent, and not at the date of the patent. When such a vein or lode is known to exist [681] within the boundaries of the placer claim, the application for a patent, which does not include also an application for the vein or lode, is to be construed as a conclusive declaration that the claimant has no right of possession to it; but where the existence of a vein or lode in a placer claim is not known at the time of the application for a patent, that instrument will convey all valuable mineral and other deposits subsequently found within the boundaries of the claim.

In the present case the evidence produced establishes substantially these facts: That in 1879 the defendant Sawyer prospected the ground which constitutes the claims, in search of mines of gold and silver; that in this work he was assisted by three or four men whom he employed; that he made several excavations of ten feet in depth to find lodes which, he was told, existed within the premises; and that he made several lode locations, and filed and recorded certificates thereof. Subsequently, in October of that year, he found himself embarrassed by debts owing to his men, and for supplies; and he applied to Mr. Stevens, mentioned above, to purchase an interest in a claim which he held. It does not appear that any purchase was made of that interest, but Stevens agreed to look at the lode claims on the ground subsequently entered as placer claims. Accordingly the two, Stevens and Sawyer, went over the ground together, and examined the excavations made, and also the timber on the land. After such examination, Stevens stated to Sawyer that it was a waste of money to excavate for lode claims on that ground; that its formation was not such as contained lodes; that the rock was not granite, but gneiss; and advised him to take it up as placer ground, provided a way could be traced to bring water for its working from a neighboring stream called Lake Creek, adding that the course he thus recommended would accomplish two purposes—it would save the timber, and enable him to successfully

work the placer. Afterwards, and in pursuance of this advice, Sawyer concluded to abandon the lode locations he had made and to file an application for patents for placer [682] claims—Stevens and Mr. Leiter, who appears to have been a friend both of Stevens and Sawyer, agreeing to advance the money required to make the necessary explorations and improvements and the application for the patents, and Sawyer agreeing to do the necessary work, and when the patents were obtained to convey the claims to them, reserving a share for himself. Stevens was examined as a witness in the case, and in his testimony stated that he had known the ground since June 1, 1879; that it had a rolling and uneven surface, with gulches, ravines, and small streams running through it, and was covered with a young and thrifty growth of timber; that he had crossed and recrossed it several times, and carefully examined all the shafts, pit holes and excavations, with reference to their mineral value, and had come to the conclusion that it contained no lodes, veins or ledges of rock in place bearing gold, silver, lead, or other minerals of value; that the only mineral found was float-gold in deposits of sand and gravel, and in his opinion it was placer mining ground; and that he had made an examination with pocket instruments and found that the waters of Lake Creek could be easily brought in ditches and flumes to work the placers. He then testified as follows: "After deciding it was placer ground, and practicable to bring water on it, Mr. Leiter and myself accepted a proposition from Mr. Sawyer to furnish the money in order to make the necessary explorations, improvements, and entry of application for government patent; he, Sawyer, to do all the work and obtain title, for a share in the property. Our object and purpose in assisting Sawyer was to obtain an interest in said placer land, being convinced of its character as such."

The Deputy United States Surveyor, who made two surveys of the ground included within the placer claims, one for the parties interested in locating the claims, and the other the official survey, on which the application for the patents was based, by direction of the Surveyor-General, was also examined as a witness, and he testified that in September or October, 1879, he made an examination of the ground for the purpose of determining whether any veins, lodes, or ledges of mineral in rock in place or gold bearing rock, had been discov- [683] ered upon it, and for that purpose had explored every pit, cut and shaft on the property, and found that there had not been discovered in them any mineral bearing rock in place; and that, at the time he made both surveys, and at the time the applications for the patents were made, there was not known to exist within the placer claims any lode or ledge of rock bearing gold, silver, or other valuable deposit. He further testified that he had resided for several years in Colorado, and was familar with placer, lode, and vein formations.

In pursuance of the arrangement with Stevens and Leiter, Sawyer performed the labor and made the improvements necessary to obtain the placer patents, and applied for the land as placer ground (other parties who had joined with him in making the locations having transferred their interests to him), stating that there were no known lodes or veins upon the tracts; and such proceedings were then taken as are required by the Revised Statutes in such cases; and, the only adverse claim made to the applications having been withdrawn, the patents were issued.

It appears very clearly from the evidence that no lodes or veins were discovered by the excavations of Sawyer in his prospecting work, and that his lode locations were made upon an erroneous opinion, and not upon knowledge, that lodes bearing metal were disclosed by them. It is not enough that there may have been some indications, by outcroppings on the surface, of the existence of lodes or veins of rock in place bearing gold or silver or other metal, to justify their designation as "known" veins or lodes. To meet that designation the lodes or veins must be clearly ascertained, and be of such extent as to render the land more valuable on that account, and justify their exploitation. Although pits and shafts had been sunk in various places, and what are termed in mining cross-cuts had been run, only loose gold and small nuggets had been found, mingled with earth, sand and gravel. Lodes and veins in quartz or other rock in place bearing gold or silver or other metal were not disclosed when the application for the patents was made. The subsequent discovery of lodes upon the ground, and their successful working, does not affect the good faith of the application. That must [684] be determined by what was known to exist at the time. It is not, therefore, a fault to be charged upon Sawyer that he abandoned his original lode locations after he had discovered that they were worthless, in order to make locations of placer claims. There was evidence that loose gold existed in the sand and gravel on the ground in many places, and had been washed from the earth; and it was the judgment of experienced miners that if water could be brought from a neighboring creek the ground could be successfully worked as placer ground.

It may be, as contended, that Stevens was moved in his advice to Sawyer as much by the existence of the valuable growth of timber on the land as by the existence of gold in the ground, and that the timber could be advantageously used by the Iron Silver Mining Company. If such were the fact, it would not affect the applicant's claim to a patent. Probably in a majority of cases where a placer claim is located, other matters than the existence of valuable deposits of mineral enter into the estimate of its worth. Its accessibility to places where supplies and medical attendance can be obtained for the men engaged in working upon it, and timber secured to support the drifting or tunneling which may be necessary; the facility with which water can be brought to wash the mineral from the earth, sand or gravel with which it may be mingled; and the uses to which the land may be subjected when the claim is exhausted, may be proper subjects of consideration. A prudent miner acting wisely in taking up a claim, whether for a placer mine or for a lode or vein, would not overlook such circumstances; and they may in fact control his action in making the location. If the land contains gold or other valuable deposits in loose earth, sand or gravel which can be secured with

profit, that fact will satisfy the demand of the Government as to the character of the land as placer ground, whatever the incidental advantages it may offer to the applicant for a patent. Nor do we consider it a suspicious circumstance, or even surprising, that when Sawyer came to convey to Stevens and Leiter, pursuant to his arrangement with them, a part of the claims, [685] he should have retained those portions which he had originally taken up as lode claims; for though shown not to be such claims in fact, they constituted ground which he had examined, and believed to be valuable for gold, having in some instances exhibited traces of it. The question respecting the whole proceedings taken upon that arrangement is one of good faith towards the Government in securing thereby its patents, and that we deem to be fully established.

We have gone over with great care all the testimony adduced by the Government in the case, and our conclusion is that it wholly fails to substantiate the charges of false and fraudulent representations to obtain the patents, or of a conspiracy by the patentee and others to defraud the Government. We perceive nothing in what was said or done by him, or by those who advised and assisted him, which justifies the imputations of the Government upon his or their conduct.

The sufficiency of the work performed and the improvements made upon each of the claims patented was shown by the certificate of the Surveyor-General of the United States for the State in which the claims are situated. The statute makes his certificate evidence of that fact. R. S. § 2325. It declares, where publication is made of the application for a patent, that "The claimant at the time of filing this application, or at any time thereafter, within the sixty days of publication, shall file with the register a certificate of the United States Surveyor-General that $500 worth of labor has been expended or improvements made upon the claim by himself or grantors." He was fully informed of the character and value of the labor performed and improvements made through his deputy, who had personally examined them and estimated their cost, and also secured affidavits of others on that subject. Their sufficiency, both as to amount and character, were matters to be determined by him from his own observation, or from the testimony or from the parties having knowledge of the subject; and in such cases, where there are no fraudulent representations to him respecting them by the patentee, his determination, unless corrected by the Land Department before pa- [686] tent, must be taken as conclusive. His estimate here in both particulars was subject to be examined by the Department before the patents were issued; and any alleged error in it cannot afterwards be made ground for impeaching their validity. *Decree affirmed.*

---

[667] JOHN P. KENNEDY, *Appt.*,

v.

MILTON W. HAZELTON.

(See S. C. Reporter's ed. 667-673.)

Specific performance—void patent—assignment of—action for profits.

1. A court of chancery cannot decree specific performance of an agreement to convey property which has no existence, or to which the defendant has no title, although the want of title is caused by the defendant's own act, as by his conveyance to a *bona fide* purchaser.

2. A patent which is applied for by one who is not the inventor, is unauthorized by law, and void, and, whether taken out in the name of the applicant or of any assignee of his, confers no rights as against the public.

3. As the patent in this case, upon the plaintiff's own showing, conferred no title or right upon the defendant, a court of equity will not order him to assign to the plaintiff.

4. The bill in this case cannot be maintained for an account of profits received by the defendant from the use of the patent, because there can be neither legal nor equitable ownership of a void patent; for the same reason, the bill cannot be maintained as a bill to remove a cloud upon title.

[No. 1081.]

Submitted Dec. 3, 1888. Decided Dec. 17, 1888.

APPEAL from a decree of the Circuit Court of the United States for the Northern District of Illinois, dismissing, on demurrer, a suit for specific performance of a contract to assign patents thereafter obtained. *Affirmed.*

Reported below, 33 Fed. Rep. 293.

Statement by *Mr. Justice* **Gray:**

This was a bill in equity for specific perform- [668] ance, filed November 12, 1887, by a citizen of New York against a citizen of Illinois, and contained the following allegations:

On July 10, 1884, the defendant, in consideration of the sum of $10,000, paid by the plaintiff to him, made an assignment to the plaintiff of an interest of one half in two patents previously obtained by the defendant for steam boilers; and also made a written contract, acknowledged before a notary public and recorded in the Patent Office, by which the defendant agreed to assign to the plaintiff any and all patents which the defendant might thereafter obtain from the United States or the Dominion of Canada, for inventions in improvements in steam boilers, and further agreed not to assign such inventions, or the patents obtained therefor, to any other person.

In 1885 the defendant publicly stated that he had invented such an improvement and explained its general plan and construction; and afterwards combined and confederated with one Goulding to avoid and evade the effect of the contract of July 10, 1884; and for that purpose the defendant caused to be prepared at his expense, but in the name of Goulding, the necessary papers to procure letters patent for this invention; and Goulding, without any consideration received from the defendant therefor, assented to be used in that regard as the alleged inventor of the improvement, and, at the request and by the procurement of the defendant, filed an application under oath for a patent for it, which application was allowed; and Goulding, before the issue of the patent, assigned in writing to the defendant all his interest in the improvement and in the patent therefor; and on December 14, 1886, a patent was issued to the defendant accordingly as assignee of Goulding, a certified copy of which was made part of the bill.

The bill further alleged that the defendant was, and Goulding was not, the original and first inventor of the improvement so patented; that the defendant had engaged in the manu-

facture and sale of boilers under this patent, and had received and was receiving great benefits therefrom; that the patent was of value exceeding the sum of $5,000, exclusive of interest and costs.

[669] The bill prayed for a decree that the defendant assign this patent to the plaintiff, for an adjudication that the title to it equitably vested in the plaintiff at the date of its issue, for an account of profits received by the defendant from its use, for a preliminary injunction against transferring or incumbering the patent, or manufacturing or selling boilers containing the improvement described therein, and for further relief.

The defendant demurred to the bill: (1), for want of equity; (2), for multifariousness, in embracing two separate and distinct causes of action, one to enforce specific performance of a contract, the other for the infringement of a patent; (3), because, as appeared by the allegations of the bill, the patent was absolutely void, and no suit could be maintained, either to compel its transfer, or for infringment thereof.

The circuit court sustained the demurrer, for the third reason, and dismissed the bill. 33 Fed. Rep. 293. The plaintiff appealed to this court.

Messrs. Banning & Banning and **Clarence A. Seward**, for appellant:

The decree is appealable.

Gould v. *Evansville & C. R. Co.* 91 U. S. 526 (23:416).

The court of equity has power to enforce either a verbal or written contract to assign letters patent for an improvement subsequently to be made.

Aspinwall Mfg. Co. v. *Gill*, 40 Pat. Off. Gaz. 1133; *Somerby* v. *Buntin*, 118 Mass. 279; *Burr* v. *De La Vergne*, 102 N. Y. 416, 3 Cent. Rep. 423; *Corbin* v. *Tracy*, 34 Conn. 325; *Binney* v. *Annan*, 107 Mass. 94; *Satterthwait* v. *Marshall*, 4 Del. Ch. 337; *Runstetler* v. *Atkinson*, McAr. & M. (D. C.) 382; *Nesmith* v. *Calvert*, 1 Wood. & M. 34; *Phila. W. & B. R. Co.* v. *Trimble*, 77 U. S. 10 Wall. 367 (19:948); *Littlefield* v. *Perry*, 88 U. S. 21 Wall. 226 (22:580); *Burke* v. *Partridge*, 58 N. H. 349.

The bill embraces two separate and distinct causes of action, one to enforce the specific performance of a contract, the other for infringement of the patent.

Oliver v. *Piatt*, 44 U. S. 3 How. 411 (11:622); Pom. Eq. Jur. § 369.

Assignment of improvements to be made in future conveys an equitable interest entitling the assignee to call upon the holder of the legal interest for an assignment thereof.

Littlefield v. *Perry*, *supra*.

A state court may determine what the contract is and in whom the title to the patent is vested, but it has no right to say that a party shall be enjoined from using a patent or in any way to pass upon any question arising as to its infringement.

Continental Store Service Co. v. *Clark*, 100 N. Y. 368, 1 Cent. Rep. 530; *Hat Sweat Mfg. Co.* v. *Reinoehl*, 102 N. Y. 167, 3 Cent. Rep. 54.

The general rule is that the plaintiff is entitled to any relief agreeable to the case made by the bill.

English v. *Foxall*, 27 U. S. 2 Pet. 612 (7:531).

The bill alleges that Hazelton was the inventor. The demurrer admits this fact.

Pullman's Palace Car Co. v. *Mo. Pac. R. Co.* 115 U. S. 596 (29:501).

Letters patent which on their face are valid cannot be attacked in any collateral action.

Mahn v. *Harwood*, 112 U. S. 365 (28:669); *Celluloid Mfg. Co.* v. *Goodyear Co.* 13 Blatchf. 385; *Mowry* v. *Whitney*, 81 U. S. 14 Wall. 441 (20:860).

Ambler v. *Whipple*, 87 U. S. 20 Wall. 546 (22:403) is an authority for the plaintiff. See also authorities cited by *Mr. Justice* Field in *Sharon* v. *Terry*, 36 Fed. Rep. 349, 352; *Peirsoll* v. *Elliott*, 31 U. S. 6 Pet. 98 (8:332).

Messrs. **L. L. Bond** and **E. A. West**, for appellee:

The applicant is required to make oath that he is the inventor, and the patent is *prima facie* evidence that he was the inventor.

Phila. & T. R. Co. v. *Stimpson*, 39 U. S. 14 Pet. 448 (10:535); *Roemer* v. *Simon*, 95 U. S. 214 (24:384).

The grant of a patent gives the patentee the *prima facie* right, and the burden of proof is on the party disputing it.

Allen v. *Hunter*, 6 McLean, 303; *Blanchard* v. *Puttman*, 3 Fish. Pat. Cas. 186; *Crouch* v. *Speer*, 1 Ban. & Ard. 145.

A patent is void if the invention patented was not originally discovered by the patentee.

Evans v. *Eaton*, 16 U. S. 3 Wheat. 454 (4:433).

A party can take nothing by a void patent.

Evans v. *Eaton*, 20 U. S. 7 Wheat. 356 (5:472); *Watson* v. *Bladen*, 4 Wash. 580; *Mini* v. *Adams*, 3 Wall. Jr. 20; *Whitely* v. *Swayne*, 4 Fish. Pat. Cas. 117.

One who has obtained the whole idea of an invention from another cannot obtain a valid patent upon it for himself.

Atlantic Works v. *Brady*, 107 U. S. 192 (27:438).

Mr. Justice **Gray** delivered the opinion of [671] the court:

The case, as stated in the bill and admitted by the demurrer, is shortly this: the defendant agreed in writing to assign to the plaintiff any patents that he might obtain for improvements in steam boilers. He did invent such an improvement, and, with intent to evade his agreement and to defraud the plaintiff, procured a patent for this invention to be obtained upon the application under oath of a third person as the inventor, and to be issued to him as assignee of that person, and has made profits by manufacturing and selling boilers embodying the improvement so patented. The plaintiff seeks by bill in equity to compel the defendant to assign the patent to him, and to account for the profits received under it.

A court of chancery cannot decree specific performance of an agreement to convey property which has no existence, or to which the defendant has no title. A bill by vendee against vendor for specific performance, which does not show any title in the defendant, is bad on demurrer. And if it appears, by the bill or otherwise, that the want of title (even if caused by the defendant's own act, as by his conveyance to a *bona fide* purchaser) was known

to the plaintiff at the the time of beginning the suit, the bill will not be retained for assessment of damages, but must be dismissed, and the plaintiff left to his remedy at law. *Columbine* v. *Chichester*, 2 Phill. 27; *S. C.* 1 Coop. *temp.* Cottenham, 295; *Ferguson* v. *Wilson*, L. R. 2 Ch. 77; *Kempshall* v. *Stone*, 5 Johns. Ch. 193; [672] *Morse* v. *Elmendorf*, 11 Paige, 277; *Milkman* v. *Ordway*, 106 Mass. 232, 256.

The patent law makes it essential to the validity of a patent, that it shall be granted on the application, supported by the oath, of the original and first inventor (or of his executor or administrator), whether the patent is issued to him or to his assignee. A patent which is not supported by the oath of the inventor, but applied for by one who is not the inventor, is unauthorized by law, and void, and whether taken out in the name of the applicant or of any assignee of his, confers no rights as against the public. R. S. §§ 4886, 4888, 4892, 4895, 4896, 4920.

The patent issued by the commissioner to the defendant as assignee of Goulding is only *prima facie* evidence that Goulding was the inventor of the improvement patented; and the presumption of its validity in this respect is rebutted and overthrown by the distinct allegation in the bill, admitted by the demurrer, that the defendant, and not Goulding, was the inventor. This fact is not brought into the case by any answer or plea of the defendant, but it is asserted by the plaintiff himself as a ground for maintaining his bill.

As the patent upon the plaintiff's own showing, conferred no title or right upon the defendant, a court of equity will not order him to assign it to the plaintiff—not only because that would be to decree a conveyance of property in which the defendant has, and can confer, no title; but also because its only possible value or use to the plaintiff would be to enable him to impose upon the public by asserting rights under a void patent. *Post* v. *Marsh*, L. R. 16 Ch. Div. 395; *Oldham* v. *James*, 14 Irish Ch. 81.

The bill cannot be maintained for an account of profits received by the defendant from the use of this patent, because a decree for profits can only proceed upon the ground that the plaintiff is at least the equitable owner of the patent, and there can be neither legal nor equitable ownership of a void patent. The same reason is a sufficient answer to the suggestion of the plaintiff that the bill may be maintained as a bill to remove a cloud upon his title in this patent.

In *Ambler* v. *Whipple*, 87 U. S. 20 Wall. 546 [673] [22: 403], cited by the plaintiff, the suit was based upon articles of partnership between Ambler and Whipple, by which it was agreed that all patents obtained by either partner should be owned by both in equal shares. The bill alleged that the two jointly had obtained a patent for a joint invention, and that another patent, afterwards obtained by Whipple upon the application of a third person, embodied the same invention with only a colorable variation. Neither of the patents was in the record, and the questions now presented were not suggested by counsel or considered by the court, but the decree for the plaintiff proceeded upon independent grounds.

The result is that the present bill cannot be maintained, and that the plaintiff must be left to any remedy that he may have to recover damages in an action at law.

Decree affirmed.

The **Chief Justice** and *Mr. Justice* **Bradley** dissented.

MEMORANDA.

[584] In the case of CHAPPELL v. BRADSHAW reported *ante*, at page 369, also,

In the case of MEANS v. DOWD reported *ante*, page 429, upon application to the court for the immediate issue of mandates without notice to the other party, no petition for rehearing pending, and these not being cases docketed and dismissed under the 9th Rule, the Court denied the application, there being no agreement of the parties that the mandates might issue. In the former case however, counsel was allowed to file his motion and give notice thereof.

CASES

ARGUED AND DECIDED

IN THE

SUPREME COURT

OF THE

UNITED STATES

IN

OCTOBER TERM, 1888.

Vol. 129.

REFERENCE TABLE

OF SUCH CASES

DECIDED IN U. S. SUPREME COURT,

OCTOBER TERM, 1888,

AND REPORTED HEREIN,

VOL. 129,

AS ALSO APPEAR IN

OFFICIAL REPORTER'S EDITION.

Off. Rep. 129 U. S.	Title.	Here in.
1	McCormick v. Graham's Admr.	598
2- 4	" " "	598
4- 7	" " "	599
7-10	" " "	600
10-12	" " "	601
12-15	" " "	602
15-18	" " "	603
18-19	" " "	604
19-21	Sargent v. Burgess	604
21-23	" "	605
23-26	" "	606
26-27	Minneapolis & St. Louis R. Co. v. Beckwith	585
27-30	" " "	586
30-33	" " "	587
33-36	" " "	588
36	Shreveport v. Cole	589
41-43	" "	591
43-44	" "	592
44	Currie, Mayor, v. United States, *ex rel.* Jacobs	592
44	" "	593
45-47	New Orleans v. Louisiana Construction Co.	607
47-48	Rosenwasser v. Spieth	628
48-51	" "	629
51-52	" "	630
52	Baldwin v. State of Kansas	640
53-56	" " "	641
56-57	" " "	642
58-59	Wallace v. Johnstone	619
59-62	" "	620
62-65	" "	621
65	Noble v. Hammond	621
67	" "	622
67-70	" "	623
70-71	Anderson v. Miller	635
71-73	" "	636
73-74	Camden v. Mayhew	608
74-77	" "	609
77-83	" "	610
83-86	" "	611
86	" "	612
86	Arrowsmith v. Gleason	630
87	Arrowsmith v. Gleason	631
87-90	" "	632
90-96	" "	633
96-99	" "	634
99-101	" "	635
101-103	Tillson v. United States	636
103-104	" "	637
104	Farnsworth v. Territory of Montana	616
104-111	" " "	617
111-114	" " "	618
114	Dent v. West Virginia	623
121	" "	625
121-124	" "	626
124-127	" "	627
127-128	" "	628
128	Inman v. South Carolina R. Co.	612
138-139	" " "	615
139-141	" " "	616
141	Stoutenburgh v. Hennick	637
147	" "	638
147-150	" "	639
150-151	" "	640
151	Bate Refrigerating Co. v. Hammond	645
152-153	" " "	647
153-156	" " "	648
156-166	" " "	649
166-169	" " "	650
169-170	" " "	651
170	Hill v. Chicago & Evanston R.R. Co.	651
171-173	" " "	652
173-175	" " "	653
176	Hanover Fire Ins. Co. v. Kinnear	653
176-177	" " "	654
178-179	Marrow v. Brinkley	654
179-181	" "	655
182	Probst v. Trustees, etc., of Presbyterian Church	642
186-188	" " "	643
188-191	" " "	644
191-192	" " "	645

Off. Rep. 129 U. S.	Title.	Here in.
192–193	Seibert v. United States, *ex rel.* Harshman	645
193–195	Galigher v. Jones	658
195–198	" "	659
198–200	" "	660
200–202	" "	661
202	Wade v. Metcalf	661
204–206	" "	663
206–207	Farmers' Loan & Trust Co. Petitioner	656
207–215	" " "	657
215–216	" " "	658
217	Kimmish v. Ball	695
219–221	" "	696
221–222	" "	697
223	National Security Bank v. Butler	682
223–225	" " " "	683
225–227	" " " "	684
227–230	" " " "	685
230–233	" " " "	686
233	Robertson v. Perkins	686
233–236	" "	687
236–238	" "	688
238	Brown v. Sutton	664
239–242	" "	666
242–245	" "	667
245–248	" "	668
248	" "	669
249	Barton v. United States	663
249–252	" "	664
252–253	Carr v. Hamilton	669
253–256	" "	670
256–259	" "	671
259–262	" "	672
262	" "	673
263	Morley Sewing Mach. Co. v. Lancaster	715
265–266	" " "	716
266–269	" " "	717
269–272	" " "	718
272–275	" " "	719
275–278	" " "	720
278–281	" " "	721
281–284	" " "	722
284–287	" " "	723
287–289	" " "	724
289–290	" " "	725
291	Ely v. New Mexico & Arizona R. R. Co.	688
292–294	" " "	689
294	" " "	690
294	Pattee Plow Co. v. Kingman	700
295–296	" "	702
296–297	" "	703
297–300	" "	704
300–303	" "	705
303–305	" "	706
305	Union Pacific R. Co. v. McAlpine	673
306–308	" "	674
308–311	" "	675
311–314	" "	676
314–315	" "	677
315	Morris v. Gilmer	690
316	" "	691
316–319	" "	692
319–321	" "	693
324–325	" "	693
325–328	" "	694
328–329	" "	695
329	White v. Cotzhausen	677

Off. Rep. 129 U. S.	Title.	Here in.
330–332	White v. Cotzhausen	678
332–338	" "	679
338–341	" "	680
341–343	" "	681
343–345	" "	682
346–347	Pinkerton v. Ledoux	706
347–350	" "	707
350–352	" "	708
352–355	" "	709
355	" "	710
355–356	Walworth v. Harris	713
356–361	" "	713
361–364	" "	714
364–366	" "	715
366	Harris v. Barber	697
368–370	" "	699
370–372	" "	700
372–374	Bank of Fort Madison v. Alden	725
374–377	" " "	726
377–380	" " "	727
380–381	" " "	728
381–383	United States v. Corwin	710
383–386	" "	711
387	Ruckman v. Cory	728
387–389	" "	729
389–390	" "	730
391–392	Eastern R. R. Co. v. United States	730
392–395	" " "	731
395–396	" " "	732
397	Liverpool & Great Western Steam Co. v. Phenix Ins. Co.	788
435–437	" " "	790
437–440	" " "	791
440–443	" " "	792
443–446	" " "	793
446–448	" " "	794
448–451	" " "	795
451–454	" " "	796
454–457	" " "	797
457–460	" " "	798
460–463	" " "	799
463	" " "	800
464	Liverpool & Great Western Steam Co. v. Insurance Co. of N. A.	800
465	Allen v. Smith	782
465–468	" "	783
468–470	" "	784
470–472	United States, *ex rel.* Levey, v. Stocksinger	785
472–475	" " "	786
475–478	" " "	787
478	" " "	788
479	Norton v. Commissioners of Taxing Dist. of Brownsville	774
488–490	" " "	778
490–493	" " "	779
493	" " "	780
493	Commissioners of Taxing Dist. of Brownsville v. League	780
501–503	" " "	783
503–505	" " "	784
505–506	Norton v. Commissioners of Taxing Dist. of Brownsville	784
506	" " "	785
506	McKenna v. Simpson	771
507	" "	772
507–511	" "	773
511–513	" "	774
513	Kimberly v. Arms	764
533–534	" "	768

Reference Table.

Off. Rep. 129 U. S.	Title.	Herein.
524–527	Kimberly v. Arms	769
527–530	" "	770
530	" "	771
530–532	Peters v. Active Mfg. Co.	738
532–534	" "	739
534–537	" "	740
537–540	" "	741
540–541	" "	742
541–543	Peters v. Hanson	743
543–546	" "	743
546–549	" "	744
549–552	" "	745
552–555	" "	746
555–557	" "	747
557	City National Bank of Fort Worth v. Hunter	752
571–572	" " "	757
572–575	" " "	758
575–578	" " "	759
578–579	" " "	760
579	United States v. Marshall Silver Mining Co.	784
582	" " "	785
582–585	" " "	786
585–588	" " "	787
588–589	" " "	788
590–592	Shotwell v. Moore	827
592–596	" "	828
596–599	" "	829
599–601	" "	830
601	Goodwin v. Fox	805
602–604	" "	806
604–606	" "	807
606–609	Goodwin v. Fox	808
609–612	" "	809
612–615	" "	810
615–618	Goodwin v. Fox	811
618–621	" "	812
621–624	" "	813
624–627	" "	814
627–630	" "	815
630–633	" "	816
633–636	" "	817
636–639	" "	818
639–641	" "	819
642	Insurance Co. of N. A. v. Guardiola	802
642–643	" " "	803
643	Woodstock Iron Co. v. Richmond & D. Extension Co.	819
654–657	" " "	824
657–660	" " "	825
660–663	" " "	826
663	" " "	827
663	Ralston v. Turpin	747
664–666	" "	748
666–669	" "	749
669–672	" "	750
672–675	" "	751
675–677	" "	752
677–679	Chapman v. Barney	800
679–682	" "	801
682	" "	802
683–684	Béné v. Jeantet	803
684–687	" "	804
687–688	" "	805
688–690	Schraeder Mining & Mfg. Co. v. Packer	760
690–693	" " "	761
693–696	" " "	762
696–699	" " "	763
699–700	" " "	764

THE DECISIONS

OF THE

Supreme Court of the United States,

AT

OCTOBER TERM, 1888.

[Authenticated copy of opinion record strictly followed, except as to such reference words and figures as are inclosed in brackets.]

[26] THE MINNEAPOLIS AND ST. LOUIS RAILWAY COMPANY, *Plff. in Err.*,

v.

OLIVER BECKWITH.

(See S. C. Reporter's ed. 26-36.)

Liability of railroad company for omission to fence its road—corporations are persons.

1. Section 1289 of the Code of Iowa, which provides that a railway corporation which neglects to pay for stock injured or killed for want of a fence on the side of its road shall be liable for double the value of the stock killed or of the damages, is not in conflict with the Fourteenth Amendment of the Constitution of the United States.

2. Corporations are persons within the meaning of such Amendment and can invoke the benefits of provisions of the Constitution, and laws which guarantee to persons the enjoyment of property, or afford to them the means for its protection, or prohibit legislation injuriously affecting it.

[No. 100.]

Argued Dec. 3, 1888. Decided Jan. 7, 1889.

IN ERROR to the Circuit Court of Kossuth County, State of Iowa, to review a judgment of the Circuit Court of said county for double the value of animals killed by a railway company by reason of the neglect of said company to fence its road. *Affirmed.*

The facts are stated in the opinion.

Mr. **Eppa Hunton**, for plaintiff in error:

Section 1289, Code of 1873, of Iowa, is unconstitutional, because it conflicts with the Fourteenth Amendment of the Constitution of the United States, which provides that "No State shall deprive any person of life, liberty or property, without due process of law, nor deny to any person within its jurisdiction the equal protection of the laws."

Corporations, to the same extent as individuals, are persons within the meaning of the Fourteenth Amendment.

Santa Clara Co. v. *Southern Pac. R. Co.* 118 U. S. 396 (30: 118); *Bank of U. S.* v. *Deveaux*, 9 U. S. 5 Cranch, 86 (3: 38); *Marshall* v. *Balt. & O. R. Co.* 57 U. S. 16 How. 326 (14: 953); *Richmond etc. R. Co.* v. *Richmond*, 96 U. S. 529 (24: 787); *R. Tax Cases*, 13 Fed. Rep. 733; *Wally* v. *Kennedy*, 2 Yerg. 554.

Under the police power, no State can impose the penalty of double damages.

Barnett v. *Atlantic & P. R. Co.* 68 Mo. 56; *Munn* v. *Ill.* 94 U. S. 113 (24: 77).

What are proper subjects of the exercise of the police power are judicial questions.

1 Rorer, Railroads, 563; *Chicago & A. R. Co.* v. *People*, 67 Ill. 11; *Sloan* v. *Pacific R. Co.* 61 Mo. 24; *Ladd* v. *Southern C. P. & Mfg. Co.* 53 Tex. 172; Tiedeman, Lim. of Police Power, 584; Cooley, Const. Lim. 715 and note; *Thorpe* v. *Rutland & B. R. Co.* 27 Vt. 149; Pierce, Railroads, 465; 3 Wood, R. Law, 1703.

(Submitted by the defendant in error, in person, on the record.)

Mr. Justice **Field** delivered the opinion of [27] the court:

This case comes before us from the Circuit Court of Kossuth County, Iowa, the highest court of that State, in which the controversy between the parties could be determined. R. S. § 709. It was an action for the value of three hogs, run over and killed by the engine and cars of the Minneapolis and St. Louis Railway Company, a corporation existing under the laws of Minnesota and Iowa, and operating a railroad in the latter State. The killing was at a point where the defendant had the right to fence its road. The action was brought before a justice of the peace of Kossuth County. Proof having been made of the killing of the animals and of their value, and that notice of the fact, with affidavit of the injury, had been served upon an officer of the company in the county where the injury was committed, more than thirty days before the commencement of the action, the justice gave judgment for the plaintiff against the company for twenty-four dollars, double the proved value of the animals. The case was then removed to the Circuit Court of Kossuth County, where the judgment was affirmed. To review this latter judgment the case is brought here on writ of error.

The judgment rendered by the justice was authorized by section 1289 of the Code of Iowa, which is as follows:

"Any corporation operating a railway that fails to fence the same against live stock running at large, at all points where such right to fence exists, shall be liable to the owner of any

such stock injured or killed by reason of the
[28] want of such fence for the value of the property or damage caused, unless the same was occasioned by the willful act of the owner or his agent; and in order to recover it shall only be necessary for the owner to prove the injury or destruction of his property; and if such corporation neglects to pay the value of or damage done to such stock within thirty days after notice in writing, accompanied by an affidavit of such injury or destruction, has been served on any officer, station or ticket agent employed in the management of the business of the corporation in the county where the injury complained of was committed, such owner shall be entitled to recover double the value of the stock killed or damages caused thereto."

The validity of this law was assailed in the state court, and is assailed here, as being in conflict with the first section of the Fourteenth Amendment of the Constitution of the United States, in that it deprives the railway company of property without due process of law, so far as it allows a recovery of double the value of the animals killed by its trains; and in that it denies to the company the equal protection of the laws by subjecting it to a different liability for injuries committed by it from that to which all other persons are subjected.

It is contended by counsel as the basis of his argument, and we admit the soundness of his position, that corporations are persons within the meaning of the clause in question. It was so held in *Santa Clara County* v. *Southern Pacific R. Co.* 118 U. S. 394, 396 [30:118]; and the doctrine was reasserted in *Pembina C. S. Mining Company* v. *Pennsylvania*, 125 U. S. 181, 189 [31:650, 653]. We admit also, as contended by him, that corporations can invoke the benefits of provisions of the Constitution, and laws which guarantee to persons the enjoyment of property, or afford to them the means for its protection, or prohibit legislation injuriously affecting it.

We will consider the objections of the railway company in the reverse order in which they are stated by counsel. And first, as to the alleged conflict of the Law of Iowa with the clause of the Fourteenth Amendment ordaining that no State shall deny to any person within its jurisdiction the equal protection of the laws. That clause does undoubtedly pro-
[29] hibit discriminating and partial legislation by any State in favor of particular persons as against others in like condition. Equality of protection implies not merely equal accessibility to the courts for the prevention or redress of wrongs and the enforcement of rights, but equal exemption with others in like condition from charges and liabilities of every kind. But the clause does not limit, nor was it designed to limit, the subjects upon which the police power of the State may be exerted. The State can now, as before, prescribe regulations for the health, good order and safety of society, and adopt such measures as will advance its interests and prosperity. And to accomplish this end special legislation must be resorted to in numerous cases, providing against accidents, disease and danger in the varied forms in which they may come. The nature and extent of such legislation will necessarily depend upon the judgment of the Legislature as to the security needed by society. When the calling, profession or business of parties is unattended with danger to others, little legislation will be necessary respecting it. Thus, in the purchase and sale of most articles of general use, persons may be left to exercise their own good sense and judgment, but when the calling or profession or business is attended with danger, or requires a certain degree of scientific knowledge upon which others must rely, then legislation properly steps in to impose conditions upon its exercise. Thus, if one is engaged in the manufacture or sale of explosive or imflammable articles, or in the preparation or sale of medicinal drugs, legislation, for the security of society, may prescribe the terms on which he will be permitted to carry on the business, and the liabilities he will incur from neglect of them. The concluding clause of the first section of the Fourteenth Amendment simply requires that such legislation shall treat alike all persons brought under subjection to it. The equal protection of the law is afforded when this is accomplished. Such has been the ruling of this court in numerous instances where that clause has been invoked against legislation supposed to be in conflict with it. Thus, in *Barbier* v. *Connolly*, 113 U. S. 27 [28:923], it was objected that a municipal ordinance of San Francisco, prohibiting washing and ironing in public [30]
laundries, within certain designated limits of the city, between the hours of ten at night and six in the morning, was in conflict with that Amendment, in that it discriminated between laborers engaged in the laundry business and those engaged in other kinds of business, and between laborers employed within the designated limits and those without them. But the court held that the provision was merely a police regulation; that it might be a necessary measure of protection in a city composed largely of wooden buildings like San Francisco, that occupations in which fires are constantly required should cease during certain hours at night, and of the necessity of such a regulation that municipal body was the exclusive judge; that the same authority which directs the cessation of labor must necessarily prescribe the limits within which it shall be enforced, as it does the limits within which wooden buildings must not be constructed; and that restrictions of this kind, though necessarily special in character, do not furnish ground of complaint if they operate alike upon all persons or property under the same circumstances and conditions. "Class legislation," said the court, "discriminating against some and favoring others, is prohibited; but legislation which, in carrying out a public purpose, is limited in its application, if within the sphere of its operation it affects alike all persons similarly situated, is not within the Amendment."

In *Soon Hing* v. *Crowley*, 113 U. S. 703 [28:1145], an objection was taken to a similar ordinance of San Francisco, that it made an unwarrantable discrimination against persons engaged in the laundry business, because persons in other kinds of business were not required to cease from labor during the same hours at night. But, the court said, there may be no risks attending the business of others, certainly

not as great as where fires are constantly required; and that specific regulations for one kind of business, which may be necessary for the protection of the public, can never be the just ground of complaint because like restrictions are not imposed upon business of a different kind. "The discriminations which are open to objection," the court added, "are those where persons engaged in the same business are subjected to different restrictions, or are held en- [31] titled to different privileges under the same conditions. It is only then that the discrimination can be said to impair that equal right which all can claim in the enforcement of the law."

In *Missouri Pacific Railway Company* v. *Humes*, 115 U. S. 512 [29: 463], a Statute of Missouri requiring every railroad corporation within it to erect and maintain fences and cattle guards on the sides of its roads, where the same passed through, along, or adjoining inclosed or cultivated fields, or uninclosed lands, and, if it did not, making it liable in double the amount of damages to animals, caused thereby, was assailed as in conflict with the Fourteenth Amendment, on the same grounds urged in the present case; namely, that it deprived the defendant of property without due process of law, so far as it allowed a recovery of damages for stock killed or injured in excess of its value, and also that it denied to the defendant the equal protection of the laws, by imposing upon it a liability for injuries committed which was not imposed upon other persons. But the court said that authority for requiring railroads to erect fences on the sides of their roads, so as to keep horses, cattle and other animals from going upon them, was found in the general police power of the State to provide against accidents to life and property in any business or employment, whether under the charge of private persons or of corporations; that in few instances could that power be more wisely or beneficently exercised than in compelling railroad corporations to inclose their roads with fences having gates at crossings and cattle guards; that they are absolutely essential to give protection against accidents in thickly settled portions of the country; that the omission to erect and maintain them, in the face of the law, would justly be deemed gross negligence; and that if injuries to property are committed, something beyond compensatory damages might be awarded in punishment of it. Referring to the rule which prevails, of allowing juries to assess exemplary or punitive damages where injuries have resulted from neglect of duties, the court said: "The statutes of nearly every State in the Union provide for the increase of damages [32] where the injury complained of results from the neglect of duties imposed for the better security of life and property, and make that increase in many cases double, in some cases treble and even quadruple the actual damages. And experience favors this legislation as the most efficient mode of preventing, with the least inconvenience, the commission of injuries. The decisions of the highest courts have affirmed the validity of such legislation. The injury actually received is often so small that in many cases no effort would be made by the sufferer to obtain redress, if the private interests were not supported by the imposition of punitive damages." And as to the objection that the Statute of Missouri denied to the defendant the equal protection of the laws, the court said that it made no discrimination against any railroad company in its requirement; that each company was subject to the same liabilities, and from each the same security was exacted by the erection of fences, gates and cattle guards, when its road passed through, along or adjoining inclosed or cultivated fields or uninclosed lands; and that there was no evasion of the rule of equality where all companies are subjected to the same duties and liabilities under similar circumstances.

In *Missouri Pacific Railway Company* v. *Mackey*, 127 U. S. 205 [32: 107], a Statute of Kansas, providing that "Every railroad company doing business in that State should be liable for all damages done to any employé of such company in consequence of any negligence of its agents, or by any mismanagement of its engineers or other employés, to any person sustaining such damage," was assailed on the ground that it was in conflict with the Fourteenth Amendment to the Constitution in that it deprived the company of its property without due process of law, and denied to it the equal protection of the laws. In support of the first position the company referred to the rule of law that prevailed previously in Kansas and some other States, exempting from liability an employer for injuries to employés, caused by the incompetency or negligence of a fellow servant, and contended that the Law of Kansas, in creating on the part of the railroad company a liability in such cases not previously existing, in the enforcement of which their property [33] might be taken, authorized the taking of property without due process of law, and imposed a special liability upon railway companies that was not imposed upon other persons, and thus denied to the former the equal protection of the laws. But the court answered that the law in question applied only to injuries subsequently committed, and that it would not be contended that the State could not prescribe the liabilities under which corporations created by its laws should conduct their business in the future, where no limitation was placed upon its power in that respect by their charters; that whatever hardship or injustice there might be in any law thus applicable to the future must be remedied by legislative enactment; that the objection, that the railroad company was denied the equal protection of the laws, rested upon the theory that legislation special in its character was within the constitutional inhibition, but that so far from such being the fact the greater part of all legislation was special, either in the objects sought to be attained by it or in the extent of its application; that when such legislation applied to particular bodies or associations, imposing upon them additional liabilities, it was not open to the objection that it denied to them the equal protection of the laws, if all persons brought under its influence were treated alike under the same conditions; that the hazardous character of the business of operating a railway called for special legislation with respect to railroad corporations, having for its object the protection of their employés as well as the safety of the public, which was not required by the business of other

corporations not subject to similar dangers to their employés; and that the legislation in question met a particular necessity, and all railroad corporations without distinction were subject to the same liabilities.

From these adjudications it is evident that the Fourteenth Amendment does not limit the subjects in relation to which the police power of the State may be exercised for the protection of its citizens. That this power should be applied to railroad companies is reasonable and just. The tremendous force brought into action in running railway cars renders it absolutely essential that every precaution should be [34] taken against accident by collision, not only with other trains, but with animals. A collision with animals may be attended with more serious injury than their destruction; it may derail the cars and cause the death or serious injury of passengers. Where these companies have the right to fence in their tracks, and thus secure the roads from cattle going upon them, it would seem to be a wise precaution on their part to put up such guards against accidents at places where cattle are allowed to roam at large. The Statute of Iowa, in fixing an absolute liability upon them for injuries to cattle, committed in the operation of their roads by reason of the want of such guards, would seem to treat this precaution as a duty. It is true that, by the common law, the owner of land was not compelled to inclose it, so as to prevent the cattle of others from coming upon it; and it may be that, in the absence of legislation on the subject, a railway corporation is not required to fence its railway, the common law as to inclosing one's land having been established long before railways were known. But the obligation of the defendant railway company to use reasonable means to keep its track clear, so as to insure safety in the movement of its trains, is plainly implied by the Statute of Iowa, which also indicates that the putting up of fences would be such reasonable means of safety. If, therefore, the company omits those means, the omission may well be regarded as evidence of such culpable negligence as to justify punitive damages where injury is committed; and if punitive damages in such cases may be given, the Legislature may prescribe the extent to which juries may go in awarding them.

The Law of Iowa under consideration is less open to objection than that of Missouri, which was sustained in the case cited above. There double damages could be claimed by the owner whenever his cattle had strayed upon the track of the railway company for want of fences on its sides, and had been killed or injured by the railway trains. Here such damages can be claimed for like injuries to cattle, only where the company has received notice and affidavit of the injury committed, thirty days before the commencement of the action, and has persisted in refusing to pay for the value of the property [35] destroyed or the damage caused. There must be, not merely negligence of the company in not providing guards against accidents of the kind, but also its refusal to respond for the actual damage suffered. Without the additional amount allowed there would be few instances of prosecutions of railroad companies where the value of the animals killed or injured by them is small, as in this case; the cost of the proceeding would only augment the loss of the injured party. As said in the Missouri case cited: "The injury actually received is often so small that in many cases no effort would be made by the sufferer to obtain redress, if the private interest were not supported by the imposition of punitive damages."

The legislation in question has been sustained in numerous instances by the Supreme Court of Iowa. In *Welsh* v. *Chicago, Burlington & Quincy Railroad Company*, 58 Iowa, 633, which was an action to recover double the value of a horse alleged to have been killed by one of the defendant's engines at a point where it had the right to fence the road, the court below instructed the jury that it was the duty of the company to fence its road against live stock running at large, at all points where such right to fence existed; and it was objected to this instruction that no such duty existed, upon which the Supreme Court of the State, to which the case was taken, said: "While it is true the statute does not impose an abstract duty or obligation upon railroad companies to fence their roads, yet as to live stock running at large a failure to fence fixes an absolute liability for injuries occurring in the operation of the road by reason of the want of such fence. The corporation owes a duty to the owners of live stock running at large, either to fence its road or to pay for injuries resulting from the neglect to fence." And in *Bennett* v. *Wabash, St. Louis & Pacific Railway Company*, 61 Iowa, 355, the same court said: "We think the only proper construction of the statute is that, in order to escape liability, the company must not only fence, but keep the road sufficiently fenced; and this has been more than once ruled." As it is thus the duty of the railway company to keep its track free from animals, its neglect to do so by adopting [36] the most reasonable means for that purpose, the fencing of its roadway as indicated by the Statute of Iowa, justly subjects it, as already stated, to punitive damages where injuries are committed by reason of such neglect. The imposition of punitive or exemplary damages in such cases cannot be opposed as in conflict with the prohibition against the deprivation of property without due process of law. It is only one mode of imposing a penalty for the violation of duty, and its propriety and legality have been recognized, as stated in *Day* v. *Woodworth*, 54 U. S. 13 How. 363, 371 [14: 181], by repeated judicial decisions for more than a century. Its authorization by the law in question to the extent of doubling the value of the property destroyed or of the damage caused, upon refusal of the railway company, for thirty days after notice of the injury committed, to pay the actual value of the property or actual damage, cannot therefore be justly assailed as infringing upon the Fourteenth Amendment of the Constitution of the United States.

Judgment affirmed.

[36] CITY OF SHREVEPORT, *Plf. in Err.*,

v.

R. T. COLE, ET AL., Executors of BENJAMIN JACOBS, Deceased, ET AL.

(See S. C. Reporter's ed. 36-44.)

Federal question—state courts—Constitution of Louisiana—antecedent creditors—writ of error—jurisdiction of circuit courts.

1. An action at law to recover a balance alleged to be due upon a contract involves no federal question.
2. The presumption in all cases is that the courts of the States will do what the Constitution and laws of the United States require.
3. Constitutions operate prospectively only, unless on their face the contrary intention is manifest beyond reasonable question.
4. There is nothing on the face of article 209 of the Louisiana State Constitution of 1879, evidencing an intention that it should be applied to antecedent contracts.
5. The rights of antecedent creditors are protected by the Constitution of the United States, and they are entitled to have them enforced in all respects as if this provision of the State Constitution had not been passed.
6. When a judgment has been rendered on contract in a state court, and remedies for its collection existing at the time of the making of the contract are taken away by State Constitution or statute, and the deprivation enforced by the final judgment of the state courts, a writ of error under section 709 of the Revised Statutes may be taken to this court.
7. In cases originally brought in the circuit court, or by removal from a state court, it is the duty of the circuit court to dismiss or remand the same whenever it appears that the suit does not really and substantially involve a dispute or controversy properly within its jurisdiction or that the parties to the suit have been improperly or collusively made or joined, either as plaintiffs or defendants, for the purpose of creating a case cognisable or removable.

[No. 106.]

Argued Dec. 4, 1888. Decided Jan. 7, 1889.

IN ERROR to the Circuit Court of the United States for the Western District of Louisiana, to review a judgment for an amount of wharfage dues which should have been collected by the defendant and paid over to plaintiffs. *Reversed.*

[37] Statement by *Mr. Chief Justice* **Fuller:**

Jacobs and Smith filed their petition in the Circuit Court of the United States for the Western District of Louisiana, describing themselves as "residents of Shreveport, Louisiana," on the 11th day of February, 1882, against the City of Shreveport, "a municipal corporation, established by the State of Louisiana, situated in the Parish of Caddo, in said State of Louisiana, and within said Western District," alleging it to be "justly indebted to petitioner in the sum of forty-seven thousand four hundred and sixty-six $\frac{81}{100}$ dollars, with five per cent per annum interest from Nov. 19, 1871, as shown by itemized statement hereto annexed as part hereof," upon a written contract annexed and made part of the petition, for the macadamizing of Commerce Street in said city, whereby the city agreed to pay five $\frac{40}{100}$ dollars for each square yard of macadamizing, and sixty-five cents per cubic yard for grading, which amounted, upon completion of the work, to ninety-eight thousand one hundred and ninety-two $\frac{40}{100}$ dollars, in which amount the city became indebted to petitioners; and that the sum of thirteen thousand four hundred and seventy-six $\frac{88}{100}$ dollars was paid thereon by property owners, and a warrant for three thousand two hundred and thirty-five $\frac{88}{100}$ dollars unpaid tax was also received by petitioners, leaving the indebtedness eighty-one thousand four hundred and eighty-six $\frac{88}{100}$ dollars. That by the terms of the contract the city obligated itself "to pay the amount of its indebtedness arising thereunto out of funds realized from the collection of wharfage dues, to be received by petitioners when paid by or collected from steamboats at the wharves of Shreveport, until the entire amount of such indebtedness under said contract was fully paid," and had collected and paid over such wharfage dues up to December 20, 1878, to the amount of thirty-four thousand and fourteen $\frac{81}{100}$ dollars, leaving a balance due of forty-seven thousand four hundred and sixty-six $\frac{81}{100}$ dollars. The petition then proceeded as follows:

"Petitioners allege that since the 20th day of December, A. D. 1878, steamboats have arrived at the Port of Shreveport from time to time up to present date, landed at the wharves of said city, and became thereby indebted for wharfage dues, collectible from such steamboats, their masters and owners, amounting in the aggregate to a large sum, say twelve thousand dollars, which should have been collected and paid over to petitioners by said city; but your petitioners aver that since the 20th December, A. D. 1878, said city has failed, neglected, and refused to collect any wharfage dues from steamboats landing at its wharves and has failed to pay petitioners the amount due them under said contract or any part thereof. [38]

"That on the 15th February, A. D. 1879, and on sundry days before and since said date, petitioners made amicable demand on said city to comply with its obligations under said contract by collecting and paying over to petitioners said wharfage dues, which said demands were by said city utterly disregarded.

"Petitioners allege that in consequence of the neglect and refusal of said city to collect and pay over to them said wharfage, and by its default in complying with the terms of the said contract, the entire balance due thereunder, viz.: said sum of forty-seven thousand four hundred and sixty-six $\frac{81}{100}$ dollars, with interest, as hereinbefore claimed, became due by and exigible from said city.

"Petitioners allege amicable demand in vain.

"They allege further that the law of the State of Louisiana, so far as same had any bearing on or relation to the said contract between them and said city and to the rights and obligations therefrom resulting, was, by operation of law impliedly part of said contract, and there was an implied contract between said city and petitioners that, in event of failure on part of either of the contracting parties to comply with the terms of said contract, the obligations resulting from and under said contract might be judicially enforced, and that under provisions of the Law of Louisiana exising at date of said contract petitioners had adequate remedies for the enforcement of their rights thereunder.

"But petitioners allege that article 208 of the Constitution of the State of Louisiana, [39]

adopted July 23, A. D. 1879, and ratified by the people of said State on the first Tuesday of the month of December, A. D. 1879, has impaired the obligation of said contract by depriving your petitioners of all remedies for the enforcement of same, in this, viz.: by limiting municipal taxation throughout said State for all purposes whatever to ten mills on the dollar of valuation.

"Petitioners represent that the assessed value of all property subject to tax by said city is one million eight hundred and fifty-three thousand eight hundred and twenty dollars; that the tax thereon, at the rate of ten mills on the dollar, amounts to the sum of eighteen thousand five hundred and thirty-eight and $\frac{20}{100}$ dollars; that the amount which the city is authorized to levy for license tax on trades, professions, and occupations does not exceed for any one year the sum of seventy-five hundred dollars.

"That said city has no property which can be seized under execution, and no revenues except such as are derived from taxation; that the entire revenues of said city for any one year do not exceed the sum of thirty-one thousand dollars, an amount not more than sufficient for its alimony, and which must be appropriated for that purpose, and in consequence of said constitutional limitation, if same be valid and operative, no means exist under the Law of Louisiana by which said city can raise funds wherewith to pay, or be compelled to pay, its just debts.

"Petitioners allege that article 208, so far as the same limits municipal taxation, is as to them null and void, because it violates the tenth section of the first article of the Constitution of the United States, which prohibits the State of Louisiana (with all other States) from passing any law impairing the obligation of contracts.

"That they are entitled to have said article 208 of the Constitution of the State of Louisiana declared null and void, so that they may have some remedy by means of which to compel said city to pay its indebtedness to them; that the case herein presented arises under the Constitution of the United States, and that your honorable court has jurisdiction thereof.

[40] "The premises considered, petitioners pray that the City of Shreveport be cited to answer hereto; that after all legal notices and delays, they have judgment against said city, declaring said article 208 of the Constitution of the State of Louisiana violative of the Constitution of the United States, null and void, and condemning said city to pay to petitioners said sum of forty-seven thousand four hundred and sixty-six $\frac{41}{100}$ dollars, with legal interest from November 19, A. D. 1879, and all costs. They pray for all orders and decrees necessary, and for general relief in the premises."

To this petition the City of Shreveport filed on May 2, 1882, its exceptions and plea to the jurisdiction, stating "that there is no law, ordinance or constitutional provision in Louisiana which would impair the obligation of the alleged contract between the plaintiffs and defendant, and no probability of the courts of the State throwing any obstacles in the way of the execution of a judgment in their favor if one should be obtained. On the contrary, all the state courts, from the highest to the lowest, in numerous decisions have held that the constitutional limitation of municipal taxation does not apply to contracts entered into prior to the adoption of the Constitution of 1879, which this is admitted to be," which were overruled February 26, 1883; and on March 1, 1883, the city filed its answer upon the merits.

Trial being had, the court charged the jury, among other things:

"That if the jury find from the evidence the income of the City of Shreveport, which is collected under provision, art. 208, is insufficient to pay more than the amount necessary for alimony, and that the operation of art. 208 will prevent city from collecting taxes sufficient to pay its debts, then as to any debt contracted prior to the adoption of State Constitution of 1879, said art. 208 violates the Constitution of the United States, and is null and void."

Verdict was returned March 13 in these words:

"We, the jury, find the following judgment, to wit: That the plaintiffs in this case have judgment against the defendant in the sum of $13,249.30, that being the amount of wharfage due the City of Shreveport, as proven on the trial to this date, reserving all the rights to the [41] plaintiffs for the balance claimed by them."

Whereupon, this judgment was rendered:

"In this case, by reason of the law and evidence, and the verdict of the jury being in favor of the plaintiffs, Benj. Jacobs and Joseph R. Smith, it is ordered, adjudged and decreed that the plaintiffs do have and recover of the defendant, the City of Shreveport, the full sum of thirteen thousand two hundred and forty-nine and $\frac{30}{100}$ dollars, with 5 per cent per annum interest thereon from the 17th day of February, 1882, and all costs of suit, said amount being wharfage dues which should have been collected by the defendant and paid over to plaintiffs up to March 13, 1883. It is further ordered, adjudged, and decreed that said amount of $13,249.30 when paid is to be a credit on the amount due by defendant to the plaintiffs as claimed in their petition; and it is further ordered and decreed that the rights of plaintiffs for the balance due them as claimed are reserved to them."

From which judgment the City of Shreveport prosecuted the writ of error herein.

Mr. **Charles W. Hornor**, for plaintiff in error:

No party can bring an action at law or in equity before his right to do so accrues.

Bernards Township v. *Stebbins*, 109 U. S. 353 (27:960) and cases cited; *McDonald* v. *Smalley*, 26 U. S. 1 Pet. 620 (7:287); *Little York Goldwashing Co.* v. *Keyes*, 96 U. S. 199 (24:656); *Little* v. *Giles*, 118 U. S. 604 (30:272).

The constitutional (state) limitation of municipal taxation does not apply to contracts entered into prior to the adoption of the Constitution of 1879.

State, Folsom, v. *N. O.* 32 La. Ann. 709, 109 U. S. 285 (27:936); *State, N. O. Gaslight Co.*, v. *N. O.* 32 La. Ann. 268, 108 U. S. 568 (27:823).

A doubtful or obscure declaration is not to be imputed.

Hayes v. *Holly Springs*, 114 U. S. 120 (29:81), quoting *State* v. *Stoll*, 84 U. S. 17 Wall. 436 (21:655); *Civil Rights Cases*, 109 U. S. 12-45 (27: 839-851).

Motives are substantial and actual under this Act of 1875.

Ins. Co. v. *Broughton*, 109 U. S. 125 (27:880); *Quincy* v. *Steel*, 120 U. S. 247 (30:626); *Farmington* v. *Pillsbury*, 114 U. S. 138 (29:114).

If some title, right, privilege or immunity, on which the recovery depends, will be defeated by one construction of the Constitution or a law of the United States, or sustained by the opposite construction, the case will be one arising under the Constitution or Laws of the United States within the meaning of the Act of 1875, otherwise not.

Starin v. *N. Y.* 115 U. S. 257 (29:390); *Hartell* v. *Tilghman*, 99 U. S. 547 (25:357); *Chicago & A. R. Co.* v. *Wiggins Ferry Co.* 108 U. S. 18 (27:636); *Chew Heong* v. *U. S.* 112 U. S. 536 (28: 770).

The reported cases where the question, "Has the federal circuit court the right to enjoin a State from violating the contract clause of the Constituton?" has been decided are: *N. O. Water Works Co.* v. *Rivers*, 115 U. S. 674 (29:525); *St. Tammany Water Works Co.* v. *N. O. Water Works Co.* 120 U. S. 66 (30:564); *N. O.* v. *Houston*, 119 U. S. 265 (30:411).

State governments should have their Constitutions and laws interpreted by their own judicial tribunals.

Venable v. *Richards*, 105 U. S. 636 (26:1196).

Where verdict of jury allows no interest, the court can allow none.

Cochrane v. *Murphy*, 4 La. Ann. 6; *Bedford* v. *Jacobs*, 5 Mart. N. S. 448; *Commandeur* v. *Russell*, Id. 461; *Dale* v. *Downs*, 7 Mart. N. S. 225; *Chain* v. *Kelso*, Id. 268.

No interest was due till the account was liquidated.

Redfield v. *Iron Co.* 110 U. S. 174 (28:109).

Messrs. **T. Alexander** and **N. C. Blanchard**, for defendants in error:

The remedy subsisting in a State when and where the contract is made, and is to be performed, is a part of its obligation; and any subsequent law of the State, which so affects that remedy as substantially to impair and lessen the value of the contract, is forbidden by the Constitution of the United States, and therefore void.

Edwards v. *Kearzey*, 96 U. S. 595 (24:798); *Van Hoffman* v. *Quincy*, 71 U. S. 4 Wall. 535 (18:403).

The remedy enters into and forms a material part of the obligation of a contract, and a statute, or provision of a State Constitution, which impairs the remedy, or lessens its efficiency, is prohibited by the Constitution of the United States.

Walker v. *Whitehead*, 83 U. S. 16 Wall. 314 (21:357); *La.* v. *N. O.* 102 U. S. 203 (26:132); *La., Nelson*, v. *St. Martin's Parish*, 111 U. S. 716 (28:574).

Mr. Chief Justice **Fuller** delivered the opinion of the court:

Unless this suit was one "arising under the Constitution or Laws of the United States," the circuit court had no jurisdiction; and if it did not really and substantially involve a dispute or controversy as to the effect or construction of the Constitution or some law, upon the determination of which the recovery depended, then it was not a suit so arising. *Starin* v. *New York*, 115 U. S. 248, 257 [29: 388, 390]; *Little York Gold Washing & Water Co.* v. *Keyes*, 96 U. S. 199 [24: 656].

The case at bar was in effect an action at law to recover a balance alleged to be due the petitioners or plaintiffs upon a contract with [42] the defendant, and the maintenance of the cause of action involved no federal question whatever, nor is any such indicated in the judgment rendered. But the jurisdiction seems to have been rested upon the averments in plaintiff's petition, that under article 209 of the State Constitution of 1879, providing that "No parish or municipal tax for all purposes whatsoever shall exceed ten mills on the dollar of valuation," the City of Shreveport, being so situated as to need all the revenue from such a tax, cannot raise funds to pay its just debts; that, therefore, plaintiffs are deprived by that article, "if same be valid and operative," of the remedy of enforcing payment by the levy of taxes, although their contract was entered into in 1871; and that so said article impairs the obligation of such contract. This contention, however, required the circuit court to assume that the Courts of Louisiana would hold that the city could lawfully avail itself of the constitutional limitation in question as a defense to the collection by taxation of the means to liquidate the indebtedness, notwithstanding that would be to apply it retrospectively, to the destruction of an essential remedy existing when the contract was entered into; whereas, the presumption in all cases is that the Courts of the States will do what the Constitution and Laws of the United States require. *Chicago & A. R. Co.* v. *Wiggins Ferry Co.* 108 U. S. 18 [27: 636]; *Neal* v. *Del.* 103 U. S. 370, 389 [26: 567, 571]. And we find in accordance with that presumption that the Supreme Court of Louisiana holds, and had held prior to the commencement of this suit, that article 209 "must have a rigid enforcement with regard to all creditors whose rights are not protected by the Constitution of the United States, and with regard to all future operations of the city government of every kind whatever. But it is perfectly clear that the rights of antecedent contract creditors are protected by the Constitution of the United States, and they are entitled to have them enforced 'in all respects as if' this provision of the Constitution 'had not been passed.' *Van Hoffman* v. *Quincy*, 71 U. S. 4 Wall. 535 [18: 403]. The fact that the Act of the State is a constitutional provision instead of a mere legislative Act does not affect the case. *Mississippi & M. R. Co.* v. *McClure*, 77 U. S. 10 Wall. 515 [19: 998]. It is apparent, there- [43] fore, that whatever percentage of taxation may be required to meet the maturing obligations in interest or principal of antecedent contract creditors must, in any and all events, be levied." *Moore* v. *N. O.* 32 La. Ann. 747.

Constitutions as well as statutes are construed to operate prospectively only, unless, on the face of the instrument or enactment, the contrary intention is manifest beyond reasonable

question. There is nothing on the face of article 209 evidencing an intention that it should be applied to antecedent contracts, and the highest tribunal of the State has declared that it cannot be so applied.

It is impossible, under these circumstances, to sustain the jurisdiction of the circuit court upon the ground, not that the city had been, but that it might perhaps be, allowed to interpose to defeat the enforcement, by the appropriate means, of payment of an alleged indebtedness, a constitutional provision inapplicable by the ordinary rules of law, and so determined to be by the deliberate decision of the state supreme court.

Nor can it be held that a dispute or controversy as to the effect of the Constitution of the United States upon article 209 of the Constitution of the State was involved in determining in this action whether the defendant was indebted to the plaintiffs, and if so, in what amount.

The prayer of the petition was that judgment might be rendered for the amount claimed, and also that article 209 might be declared null and void; and some considerations supposed to bear upon the latter subject were addressed to the jury by the learned judge who presided upon the trial, to which the verdict made no response in terms; but it does not appear that an order for the assessment of taxes to pay the amount awarded or for any supplementary proceedings of like nature, to the entry of which said article might in any view be claimed to be an obstruction, was authorized by statute to be made part of the judgment in such a case as this. And the judgment was simply for the recovery of so much money, to be thereafter collected as provided by law.

[44] When, in the instance of a judgment rendered on contract in a state court, remedies for its collection existing at the time of the making of the contract, are taken away, in substance, by State Constitution or statute, and the deprivation enforced by the final judgment of the state courts, a writ of error under section 709 of the Revised Statutes enables this court to vindicate the supremacy of the Constitution and Laws of the United States and administer the proper remedy; but had this record in its present shape come before us in that way even, we should have had no alternative save to dismiss the writ.

In cases originally brought in the circuit court, or by a removal from a state court, it is made the duty of the circuit court to dismiss or remand the same whenever it appears that the suit does not really and substantially involve a dispute or controversy properly within its jurisdiction, or that the parties to the suit have been improperly or collusively made or joined, either as plaintiffs or defendants, for the purpose of creating a case cognizable or removable.

As remarked in *Bernards Township* v. *Stebbins*, 109 U. S. 353 [27: 960], it has been the constant effort of Congress and of this court to prevent the discrimination in respect to suits between citizens of the same State and suits between citizens of different States, established by the Constitution and Laws of the United States, "from being evaded by bringing into federal courts controversies between citizens of the same State." We regard this suit as an evasion of that character.

The judgment of the Circuit Court is reversed and the cause remanded, with directions to dismiss the petition.

ANDREW CURRIE, Mayor, ET AL., Trustees of the CITY OF SHREVEPORT, LA., *Plffs. in Err.*, [44]

v.

UNITED STATES, *ex rel.* JACOBS AND SMITH.

(See S. C. Reporter's ed. 44.)

Mandamus.

A petition for a writ of mandamus, commanding the levy of a tax for the payment of a judgment, must be dismissed where the judgment itself has been reversed.

[No. 107.]

Argued Dec. 4, 1888. Decided Jan. 7, 1889.

IN ERROR to the Circuit Court of the United States for the Western District of Louisiana, to review a judgment for a peremptory writ of mandamus. *Reversed.*

The facts are stated in the opinion.

Mr. **Charles W. Hornor,** for plaintiffs in error:

The nature of this motion is simply dilatory.

Beecher's Case, 8 Coke 58 (a); *Dimes* v. *Grand Junction Canal Co.* 3 H. L. Cas. 795.

The statute nowhere authorizes the city to guaranty and warrant payment of contractors.

State Bank v. *Orleans Nav. Co.* 3 La. Ann. 294; *Bank of Columbia* v. *Okely*, 17 U. S. 4 Wheat 244 (4: 559).

Messrs. **T. Alexander** and **N. C. Blanchard,** for defendants in error:

Instead of issuing an alternative writ of mandamus, it is equally proper for the court to grant a rule to show cause.

High, Extr. Legal Rem. § 503.

This is frequently done in the United States Courts.

Knox Co. v. *Aspinwall*, 65 U. S. 24 How. 376 (16: 735); *U. S.* v. *N. O.* 98 U. S. 381 (25: 225).

It is also proper under the practice of the Louisiana Courts.

Savage v. *Holmes*, 15 La. Ann. 334; *Morris* v. *Womble*, 30 La. Ann. 1312.

In a mandamus proceeding to enforce collection of a judgment against a municipal corporation, the judgment itself cannot be impeached collaterally. The respondents are concluded by the judgment at law.

Rock Island Co. v. *U. S.* 71 U. S. 4 Wall. 435 (18: 419); *Davenport* v. *U. S.*, *Lord*, 76 U. S. 9 Wall. 409 (19: 704); *U. S.* v. *N. O. supra; La., Nelson*, v. *St. Martin's Parish Police Jury*, 111 U. S. 716 (28: 574); High, Extr. Legal Rem. § 396.

When at the time a debt was contracted there existed no limitation on the rate of taxation by a municipal corporation, any subsequent legislative repeal or modification of the taxing power, so as to deprive the holder of the contract of all adequate and efficacious rem-

edy, is within the inhibition of the Constitution.

Van Hoffman v. *Quincy*, 71 U. S. 4 Wall. 535 (18: 403); *Wolff* v. *N. O.* 103 U. S. 358 (26: 395); *Ralls Co. Ct.* v. *U. S.* 105 U. S. 733 (26: 1220).

As long as a city exists, all state laws, whether in the form of a statute or constitutional provision which withdraws or restricts her taxing powers so as to impair the obligations of their contracts, are absolutely void.

See above authorities.

Mr. Chief Justice **Fuller** delivered the opinion of the court:

In this case a peremptory writ of mandamus was awarded, commanding the levy of a special tax for the payment of the judgment rendered in favor of Jacobs & Smith, and against the City of Shreveport, just reversed in the preceding case, No. 106 [*ante*, 589], for want of jurisdiction. The judgment must, therefore, be reversed, and the cause remanded with directions to dismiss the petition.

So ordered.

---

[1] CYRUS H. McCORMICK ET AL., Exrs. of CYRUS H. McCORMICK, Deceased, ET AL. *Appts.*,

v.

PETER WHITMER, Admr., of HUGH GRAHAM, Deceased.

(See S.C. Reporter's ed. 1—19.)

Patent for harvesters — characteristics of—infringement —limitation of claim—first and second claims—construction of the term "rocking."

In a suit for an infringement of letters patent, No. 74,342, granted to Alvaro B. Graham, February 11, 1868, for an improvement in harvesters, held:

1st. The capacity of the finger beam to rise and fall freely at either end, spoken of in the specification of plaintiff's patent, was not a new thing with him, but had been used for many years in mowing and reaping machines.

2d. It was also old to have a lever connected by a loose connection by which the driver could tip up the front edge of the finger bar arbitrarily and secure it so that it could not fall below the inclination at which he had set it, although it was left free to tip up further automatically.

3d. As the finger beam in defendants' machine does not have the motion which results from the combination of the elements specified in the first claim of the plaintiff's patent and does not rock forward and backward in the sense of that claim or in the sense described in plaintiff's specification, it does not infringe such first claim. Nor does it contain the swivel joint, M, described in the first claim, located and operating as in the plaintiff's patent.

4th. The first claim of that patent must, in view of the state of the art, and of the special limitation, put upon it, on the requirement of the Patent Office, be limited to the special construction and arrangement set forth in that claim.

5th. The second claim of the patent contains, combined, all the elements set forth in the first claim with the addition of the rigid arm I, which is made to rock backward and forward by positive action in either direction; while in defendants' machine, there is no such rigid arm, but only a connection by which the front of the finger beam can be lifted while it falls by its own weight when released, instead of being positively forced down as in the plaintiff's patent. This species of lifting device was old.

6th. In defendants' patent, the second, fifth and seventh claims, in speaking of the shoe as rocking, can only refer to its swinging on a hinge at its rear end, and the term "rocking" is not used in the sense in which it is used in the plaintiff's patent.

7th. On a proper construction of claims 1 and 2 of plaintiff's patent, the defendants have not infringed it.

[No. 108.]

Argued Dec. 4, 5, 6, 1888. Decided Jan. 7, 1889.

APPEAL from a decree of the Circuit Court of the United States for the Northern District of Illinois, in favor of plaintiff, for damages in an action for the infringement of letters patent No. 74,342, granted to Alvaro B. Graham February 11, 1868, for an improvement in harvesters. *Reversed.*

The bill recites the invention by Alvaro B. Graham, the issue of the patent, its assignment to the complainant August 12, 1870, charges infringement of the first and second claims, and prays for an injunction and account of profits and damages.

The defendants, by their answer and proofs, insisted upon the following defenses:

First, that the complainant was not the inventor of the alleged improvement or any material part thereof;

Second, that the defendants had not infringed the patent or employed the alleged improvement claimed therein;

Third, that the features of their machine, by reason of which they were charged with infringement, were found in many prior patents, recited in the answer, and introduced in evidence;

Fourth, that the patent was invalid for want of novelty, and that the alleged invention was set forth and described in various prior patents recited in the answer;

Fifth, that the patent was invalid by reason of the alleged invention having been in public use and on sale for more than two years before application therefor, with the knowledge and consent of the patentee;

Sixth, that the patent was invalid by reason of the alleged invention having been shown and described in a prior patent obtained by the same patentee, under date of July 23, 1867; and by reason of the fact that the application for the patent in suit was in fraud of the rights of the assignees under the first patent;

Seventh, that the patentee, having, prior to the application for the patent of July, 23, 1867, assigned that application and the invention to which it related, and the exclusive right to the machine exhibited therein (having at the time a claim in that application for the subject matter here in controversy), could not lawfully by subsequent independent application, obtain separate exclusive title to the part of the machine thus assigned, or convey such title to this complainant;

Eighth, that if the subsequent patent (the one in suit) were not altogether invalid, in so far as it related to the machine exhibited and described in the first, the assignees of the first patent had such interest or equities in the second as made them necessary parties;

Ninth, that complainant had not such title under the patent sued upon as to enable him to maintain this suit; and

Tenth, that the defendants held a license under the Graham patent of July 23, 1867.

The answer also denied that the complainant had been in the enjoyment of the rights and interest purporting to be secured by the patent; that the same was of value; that he was entitled to damages occasioned by the alleged infringement, or entitled to sue for and receive the same to his own use.

The court overruled the several defenses, and entered a decree for complainant under these two claims, referring the case to a master for an account of profits and damages.

After such reference complainant entered on the record a waiver of profits and confined his claim to damages on the basis of a royalty or license fee.

The master reported that the defendants had made and sold 27,200 machines containing the patented improvements covered by the first

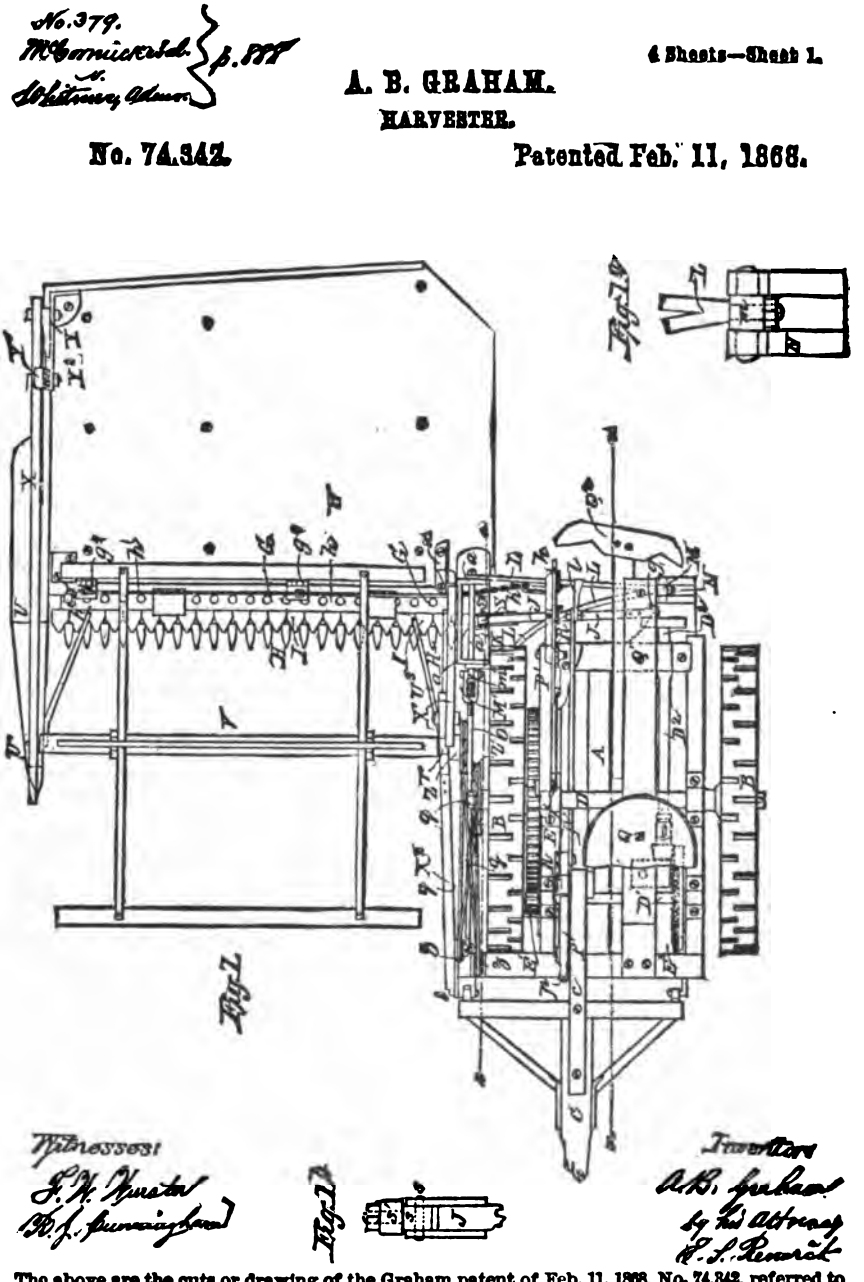

The above are the cuts or drawing of the Graham patent of Feb. 11, 1868, No. 74,342, referred to in the Opinion of the Court.

and second claims of the patent sued on, and that the complainant was entitled to recover, on the basis of an established royalty or license fee, at the rate of $3 per machine, making $81,600. He computed interest on this sum at the rate of 6 per cent per annum, from March 13, 1880 — the date of the opinion of the circuit court—and reported a total sum of $102,324.80 as due the complainant.

Both parties excepted to this report—the complainant, among other things, on the ground that the master should have reported 32,382 machines, instead of 27,200, and should have computed interest from the end of each year's infringement: and the defendants, among other things, on the ground that no established royalty should have been found and no interest allowed. These exceptions were argued before *Judge* Gresham April 14, 15, 1885, who on April 27, 1885, overruled all the exceptions except those by the defendants relating to interest. He held, however, that interest should be computed on the amount of damages reported by the master, $81,600, from the date of the master's report, and entered a final decree for $85,353.60.

From this decree the defendants appealed, and filed their appeal in this court October 12, 1885.

The first suit in which this patent was the subject of litigation was begun in 1874 against Gammon & Deering, and is reported in 7 Biss. 490, and 8 Bann. & Ard. 7. The next suit, begun June 8, 1877, against Cyrus H. McCormick and others is now before this court. The opinion, of *Judges* Drummond and Dyer, announced March 13, 1880, is given in 5 Bann. & Ard. 244. The next suit, begun December 6, 1878, against the Geneva Lake Crawford Manufacturing Company, is reported in 11 Fed. Rep. 138. The next suit was begun October 16, 1883, against the Plano Manufacturing Company, and is reported in 38 Fed. Rep. 917.

In these cases the Graham patent was sustained and infringement of the first and second claims found.

Complainant's patent was applied for February 11, 1867, and issued February 11, 1868. The defendants are not charged with having used the machine therein shown, but with having used on a different machine a mode of attaching and tilting the finger beam which complainant insists infringes the first two claims. These claims are given in the opinion.

The other facts of the case are stated in the opinion.

Messrs. **Robert H. Parkinson** and *Joseph G. Parkinson*, for appellants:

In *Graham* v. *Gammon*, 7 Biss. 490, the case in which this Graham patent was first sustained, and which has been accepted as establishing its validity, it was only sustained with limitations to the specific construction.

The claims for this device were constantly rejected until limited to the swiveling joint, M, as distinguished from a swiveling joint located elsewhere, and to the capacity for being rocked both forward and backward, while having the inclination controlled by the rocking arm, and these elements combined with the others "as set forth."

Whether the patented device is considered with reference to the peculiarities of structure which distinguished it from former machines or with reference to the mode of operation introduced by it, or with reference to the result accomplished, defendants' machine does not adopt either, but adheres to the prior type in every respect in which Graham departs from it.

The departure which Graham made was one which no experienced manufacturer would ever follow. By destroying the capacity of the machine for automatic adaptation to the surface and disturbing the alignment of the bar whenever tilted, it doomed every machine which incorporated it to be banished from the market and the field. It was hastily abandoned by each of the successive firms that were formed to manufacture it, and disappeared permanently about the time the patent was issued.

Unless complainant's claims are limited to the location of the pivotal joint, which affords the rocking movement between the finger beam and the draft rod, at a point in front of the finger beam, and to the rigid arm, by which the rocking motion is imparted, each of the combinations recited in the first and second claims is in terms and substance anticipated. If they are so limited, the question of their novelty and patentability is immaterial.

The crosswise tilt was old, and the swivel joint was the common means for providing for such movement in mowing machines.

Pa. R. Co. v. *Locomotive E. S. Truck Co.* 110 U. S. 490 (28: 222); *Hendy* v. *Golden State & Miners Iron Works*, 127 U. S. 370 (*ante*, 207).

The Graham machine containing the device in controversy was manufactured in numbers, for sale in the spring of 1863, put on sale, and in practical use throughout the harvest of 1863. The same was true at the harvest of 1864. The application was filed February 11, 1867.

The complainant could derive no benefit from the 1867 patent. If it is treated as an application for a patent on this invention, the cancellation of the claim upon rejection and the acceptance of the patent without it must be treated as a dedication to the public.

James v. *Campbell*, 104 U. S. 356 (26: 786); *Miller* v. *Bridgeport Brass Co.* 104 U. S. 350 (26: 783); *Sargent* v. *Hall Safe & Lock Co.* 114 U. S. 63 (29: 67).

If an applicant does not take interest enough in his application to ascertain whether it is filed within two years, which the law allows him, the consequences must fall upon him rather than that the manufacturing industries stand still to await his convenience.

Elizabeth v. *Nicholson Pavement Co.* 97 U. S. 126 (24: 1000); *Egbert* v. *Lippmann*, 104 U. S. 333 (26: 755); *McClurg* v. *Kingsland*, 42 U. S. 1 How. 202 (11: 102); *Consolidated Fruit-Jar Co.* v. *Wright*, 94 U. S. 92 (24: 68); *Pitts* v. *Hall*, 2 Blatchf. 229; *Shaw* v. *Cooper*, 32 U. S. 7 Pet. 292 (8: 689); *Smith & G. Mfg. Co.* v. *Sprague*, 123 U. S. 249 (31: 141).

The Graham patent of July 23, 1867, describing the device here in controversy as one of the inventions embraced therein, predicated upon a machine which would be inoperative without this device, and disclaiming as old the hinge on which the endwise tilt took place, operated as a dedication to the public of whatever was described as a part of the invention to which such patent related and not claimed therein.

The fact that the record in that case showed

the applicant to have claimed this combination, then, after rejection, erased his claim and taken a patent without it with no reservation as to any part of the machine described therein, operated as an estoppel upon any disturbance of the right of the public thereto through a subsequent patent which disclosed no new invention in respect to this part of the machine.

It would be a fraud upon the public at large, if Graham, by this application, could reappropriate the subject matter to which that patent related.

O'Reilly v. *Morse*, 56 U. S. 15 How. 62 (14: 601); *Odiorne* v. *Amesbury Nail Factory*, 2 Mason, 28; *Smith* v. *Ely*, 5 McLean, 76; *James* v. *Campbell*, 104 U. S. 356 (26: 786).

If prior patents ever operate as an abandonment, they must so operate at the time they issue, and not after the right has been forfeited by some other reason.

Miller v. *Bridgeport Brass Co.* 104 U. S. 350 (26: 783); *Mosler Safe & Lock Co.* v. *Mosler*, 127 U. S. 354 (32: 182); *Godfrey* v. *Eames*, 68 U. S. 1 Wall. 317 (17: 684); *Suffolk Mfg. Co.* v. *Hayden*, 70 U. S. 3 Wall. 315 (18: 76); *Sickels* v. *Falls Co.* 4 Blatchf. 509.

There was no established royalty or license fee, and no evidence showing actual damages of any kind. On the contrary, it affirmatively appeared that there were no damages.

A complainant cannot, pending a reference to a master, manufacture, either by instruments executed by himself, or by negotiations with strangers, an *ex post facto* measure of damages to be applied to the trespass of defendants for which this reference is ordered.

An established royalty, to afford any measure of damages, must be one which has been adopted at the time of the trespass.

The value of the invention must be proved by witnesses who state under oath, and subject to cross examination, the particular data upon which they base their estimates.

Complainant having failed to show any uniform rate established by concurrent usage, and having failed to furnish any other competent measure of damages, and having waived profits, must recover nominal damages only.

Black v. *Munson*, 14 Blatchf. 265; *Matthews* v. *Spangenberg*, 14 Fed. Rep. 350; *Greenleaf* v. *Yale Lock Mfg. Co.* 17 Blatchf. 253; *Seymour* v. *McCormick*, 57 U. S. 16 How. 480 (14: 1024); *Washington, A. & G. Steam Packet Co.* v. *Sickles*, 86 U. S. 19 Wall. 611 (22: 203); *Black* v. *Thorne*, 111 U. S. 122 (28: 372); *Garretson* v. *Clark*, 111 U. S. 120 (28: 371); *Suffolk Mfg. Co.* v. *Hayden*, 70 U. S. 3 Wall. 315 (18: 76); *N. Y.* v. *Ransom*, 64 U. S. 23 How. 487 (16: 515); Walker, Patents, § 559.

No interest should have been allowed prior to the ascertainment of the amount due by the decree of the court which modified the master's report.

Silsby v. *Foote*, 61 U. S. 20 How. 378 (15: 953); *Mowry* v. *Whitney*, 81 U. S. 14 Wall. 434 (20: 858); *Parks* v. *Booth*, 102 U. S. 96 (26: 54); *Root* v. *Lake Shore & M. S. R. Co.* 105 U. S. 189 (26: 975).

Messrs. Ephraim Banning and **Thomas A. Banning**, for appellee:

As pointed out in detail, the first and second claims of the Graham patent cover combinations of mechanisms that produce the floating finger beam; that unite it to a stiff tongued or single frame machine; that enable it to automatically conform to the surface of the ground; that yet enable the driver to controllably adjust the point of the guards at any desired angle; that permit the finger beam to be folded for transportation; and that accomplish all of these results independent of the main frame.

The courts which have passed upon the Graham patent have considered its first and second claims as covering a machine accomplishing the objects and employing the means enumerated.

Graham v. *Gammon*, 3 Bann. & Ard. 8; *Graham* v. *McCormick*, 5 Bann. & Ard. 244; *Graham* v. *Geneva Lake Crawford Mfg. Co.* 11 Fed. Rep. 145; *Graham* v. *Plano Mfg. Co.* 33 Fed. Rep. 917.

The 1867 patent was intended to cover one part of the Graham machine, and the 1868 patent another and distinct part.

McMillan v. *Rees*, 5 Bann. & Ard. 274.

It is a good defense to a suit on a reissue to show that the commissioner exceeded his authority in granting it.

Mahn v. *Harwood*, 112 U. S. 359 (28:667).

The statute only gives a reissue when the original is defective by inadvertence, accident or mistake.

Leggett v. *Avery*, 101 U. S. 256, 259 (25:865, 866).

The grant of a subsequent patent for an invention is an estoppel to the patentee to set up any prior grant for the same invention, which is inconsistent with the terms of the last grant.

Barrett v. *Hall*, 1 Mason, 473.

A party having deliberately abandoned his original application, in order that in a new one he may present his invention in a more complete and perfect form, and who receives a patent through the medium of the later application, cannot be permitted subsequently to revive the old one.

Ex parte Bramwell, Dec. Com. Pat. (1870) 76; *Ex parte Hyde*, Dec. Com. Pat. (1871) 111; *Case of Jesse Jopling*, 8 Pat. Off. Gaz. 1032.

Graham's two inventions being proper subjects for separate patents, it was competent for the office to require a division and separate applications.

Godfrey v. *Eames*, 68 U. S. 1 Wall. 324 (17: 685); *Ex parte Heginbotham*, Dec. Com. Pat. (1875) 94; *Suffolk Mfg. Co.* v. *Hayden*, 70 U.S. 3 Wall. 315 (18:76).

If an application is pending for a patent for several improvements, a new application may be made for a patent for one of them.

Singer v. *Braunsdorf*, 7 Blatchf. 535; *McMillan* v. *Rees*, 5 Bann. & Ard. 269.

This class of inventions may be experimented with in public; and it has been repeatedly held that two or three years is a very reasonable time in which to complete an invention of this kind.

Wheeler v. *Russel*, Dec. Com. Pat. (1872) 32; *Kirby* v. *Johnson*, Id. 88; *Elizabeth* v. *Nicholson Pavement Co.* 97 U. S. 134 (24:1004); *Coffin* v. *Ogden*, 85 U. S. 18 Wall. 124 (21:823).

There was never any delay on Graham's part, or on the part of his solicitors, of which he had any knowledge, in filing or prosecuting his applications. This being the case, his two applications must be considered as a part or con-

tinuation of the same proceeding, so that, on this question, the complainant is entitled to the same protection as if the patent sued on had been issued on the first application; and the circumstances are such that, if necessary for the complainant's protection, the first application should be considered as filed at the time it was placed in the hands of Munn & Company, the first of 1864.

Smith v. *Goodyear D. V. Co.* 93 U. S. 500 (23: 956); *Godfrey* v. *Eames*, 68 U. S. 1 Wall. 317 (17:684); *Singer* v. *Braunsdorf*, 7 Blatchf. 521; *Bell* v. *Daniels*, 1 Fish. Pat. Cas. 377; *Howe* v. *Newton*, 2 Fish. Pat. Cas. 532; *Blandy* v. *Griffith*, 3 Fish. Pat. Cas. 616; *Jones* v. *Sewall*, 6 Fish. Pat. Cas. 364; *Goodyear D. V. Co.* v. *Willis*, 7 Pat. Off. Gaz. 45; *Henry* v. *Francestown Soap-Stone Stove Co.* 2 Bann. & Ard. 223; *Birdsell* v. *McDonald*, 6 Pat. Off. Gaz. 682; *Case* v. *Hastings*, 7 Pat. Off. Gaz. 558; *Ex parte Howes*, Dec. Com. Pat. (1872) 42.

In the Dolph patent it is difficult to find any mechanism which was intended to secure the peculiar motions which is in the patent to Graham.

Graham v. *Gammon*, 3 Bann. & Ard. 10.

The Aultman patents, the last of which was a reissue, do not anticipate the Graham invention, because they do not provide for any rocking motion.

Graham v. *Geneva Lake Crawford Mfg. Co.* 11 Fed. Rep. 144.

The Zug patent has been before the court from the beginning of the Graham litigation. In *Graham* v. *Gammon*, 3 Bann. & Ard. 9, *Judge* Blodgett said: "It is contended that in the model of the Zug patent, which is put in evidence, there is a provision for the rocking or rolling of the finger bar; but I must say that I can find no such feature, either in the specification or model."

The patent to E. Ball, of October 18, 1859, does not have Graham's mechanism, nor any rocking motion of the finger bar; it does not have this vibratable link, his arm H, nor his swivel joints M and M'.

Graham v. *Gammon*, 3 Bann. & Ard. 10.

In the Bartlett and Dodge mechanism, there is no possible device in the patent for the rocking, and no device or means by which the finger beam can be rolled or tilted in the manner provided in the Graham patent.

Graham v. *Gammon*, 3 Bann. & Ard. 10.

The patent issued to Andrew Wemple, January 29, 1867, was before the court in *Graham* v. *Gammon*, but was held insufficient as a ground of defense.

Graham v. *Gammon*, 3 Bann. & Ard. 11.

These several patents do not embody the entire invention secured to the complainant in his letters patent.

Imhaeuser v. *Buerk*, 101 U. S. 660 (25:947).

In his specification, just before the claims, Graham says: "Having thus described a machine embodying all my improvements, I declare that I do not limit my new combinations to the particular forms represented in the drawings, but intend to vary the form and construction of the members of the combinations, or to use equivalent members in their places, as circumstances may render expedient."

This clause should be regarded as a part of the claim and as explaining its meaning, application and extent. This part of the claim stands precisely as it was in the original application.

La Rue v. *Western Electric Co.* 28 Fed. Rep. 89.

The evidence shows Mr. Graham to be the first who has really accomplished this desirable tilting or tipping motion.

Graham v. *Gammon*, 3 Bann. & Ard. 11.

The differences between defendants' and complainant's machines are differences of form, and not of substance.

Graham v. *Geneva Lake Crawford Mfg. Co.* 11 Fed. Rep. 147.

After *Judges* Drummond and Dyer had announced their decision in favor of the complainant, March 13, 1880, the defendants filed a petition for a rehearing.

Such petitions are addressed to the discretion of the court. They may grant them, or refuse them, and their action in either case is not open to review in this court.

Pomeroy v. *State Bank of Indiana*, 68 U. S. 1 Wall. 597 (17:640); *Henderson* v. *Moore*, 9 U. S. 5 Cranch, 11 (3:22); *Alexandria Marine Ins. Co.* v. *Young*, 9 U. S. 5 Cranch, 187 (3:74); *McLanahan* v. *Universal Ins. Co.* 26 U. S. 1 Pet. 183 (7: 98); *U. S.* v. *Buford*, 28 U. S. 3 Pet. 32 (7:585); *Barr* v. *Gratz*, 17 U. S. 4 Wheat. 213 (4:553); *Blunt* v. *Smith*, 20 U. S. 7 Wheat. 248 (5:446); *Brown* v. *Clarke*, 45 U. S. 4 How. 4 (11: 850).

In an action at law for the infringement of a patent, the plaintiff can recover a verdict for only the actual damages which he has sustained; and the amount of such royalties or license fees as he has been accustomed to receive from third persons for the use of the invention, with interest thereon from the time when they should have been paid by the defendants, is generally, though not always, taken as the measure of his damages; but the court may, whenever the circumstances of the case appear to require it, inflict vindictive or punitive damages, by rendering judgment for not more than thrice the amount of the verdict.

Seymour v. *McCormick*, 57 U. S. 16 How. 489 (14:1024); *Tilghman* v. *Proctor*, 125 U.S. 143 (31 666); *Locomotive Safety Truck Co.* v. *Pa. R. Co.* 5 Bann. & Ard. 518; *Mowry* v. *Whitney*, 81 U.S. 14 Wall. 653 (20:866); *Littlefield* v. *Perry*, 28 U. S. 21 Wall. 229 (22:581).

Where a patentee has clearly suffered a material loss by the defendant's use of his invention, and has produced all the evidence of which the nature of the case admits to establish the amount, there has never yet been a case in which his recovery has been restricted to nominal damages.

McKeever v. *U. S.* 23 Pat. Off. Gaz. 1529.

The general rule that an established royalty or license fee constitutes the true criterion of damages can only be applied where there is a fixed and established price at which a license is granted.

Black v. *Munson*, 14 Blatchf. 265, 2 Bann. & Ard. 626; *Matthews* v. *Spangenberg*, 14 Fed. Rep. 351.

An established license fee is competent and satisfactory evidence of the value of a patent right, because the price which it commands between those who sell and purchase it is the best criterion of its value.

Wooster v. *Simonson*, 16 Fed. Rep. 680; *Nat. Car Brake Shoe Co.* v. *Terre Haute Car & Mfg. Co.* 19 Fed. Rep. 517.

There being no established patent or license fee in the case, in order to get a fair measure of damages, or even an approximation to it, general evidence must necessarily be resorted to.

Suffolk Mfg. Co. v. *Hayden*, 70 U. S. 3 Wall. 320 (18:78).

He is the first inventor in the sense of the Act, and entitled to a patent for his invention, who has first perfected and adapted the same to use; and until the invention is so perfected and adapted to use, it is not patentable.

Reed v. *Cutter*, 1 Story, 590; 2 Robb, Pat. Cas. 90; *White* v. *Allen*, 2 Fish. Pat. Cas. 446; *Roberts* v. *Reed Torpedo Co.* 3 Fish. Pat. Cas. 631; *Howe* v. *Underwood*, 1 Fish. Pat. Cas. 166; *Elizabeth* v. *Nicholson Pavement Co.* 97 U. S. 134 (24:1004).

His acts are to be construed liberally; he is not to be estopped by licensing a few persons to use his invention to ascertain its utility, or by any such acts of peculiar indulgence and use as may fairly consist with the clear intention to hold the exclusive privilege.

Jennings v. *Pierce*, 15 Blatchf. 42, 3 Bann. & Ard. 365; *Innis* v. *Oil City Boiler Works*, 22 Fed. Rep. 780; *Campbell* v. *N. Y.* 9 Fed. Rep. 503; *Elizabeth* v. *Nicholson Pavement Co.* 97 U. S. 126 (24:1000); *Mellus* v. *Silsbee*, 4 Mason, 108; 1 Robb, Pat. Cas. 509; *Draper* v. *Wattles*, 3 Bann. & Ard. 620, 621.

The mere fact that a new article is shown in the drawings of a patent for a machine would not of itself be an abandonment of the new article, which would properly be the subject of a different patent, until the statutory forfeiture of use for two years had been incurred.

Hatch v. *Moffitt*, 15 Fed. Rep. 252, 255; *Suffolk Mfg. Co.* v. *Hayden*, 70 U. S. 3 Wall. 315 (18:76); *Wilson* v. *Cubley*, 26 Fed. Rep. 157; *Vt. Farm Machine Co.* v. *Marble*, 19 Fed. Rep. 307, 20 Fed. Rep. 117; *Graham* v. *McCormick*, 11 Fed. Rep. 859; *Graham* v. *Geneva Lake Crawford Mfg. Co.* Id. 138; *McMillan* v. *Rees*, 1 Fed. Rep. 722; *Cahn* v. *Wong Town On*, 19 Fed. Rep. 424; *Collender* v. *Griffith*, 18 Blatchf. 110, 2 Fed. Rep. 206; *Eastern Paper Bag Co.* v. *Standard Paper Bag Co.* 30 Fed. Rep. 65.

[2] *Mr. Justice* **Blatchford** delivered the opinion of the court:

This is a suit in equity, brought in the Circuit Court of the United States for the Northern District of Illinois, by Hugh Graham against Cyrus H. McCormick, Leander J. McCormick, and Robert H. McCormick, on the 8th of June, 1877, founded on the alleged infringement of letters patent No. 74,842, granted to Alvaro B. Graham, February 11, 1868, for an "improvement in harvesters." In the course of the suit the defendant Cyrus H. McCormick having died, his executor, Cyrus H. McCormick, and his executrix, Nettie Fowler McCormick, were substituted as defendants in his stead.

The defenses set up in the answer were want of novelty and noninfringement. After issue joined, proofs were taken on both sides, and on the 24th of April, 1882, the court made an interlocutory decree, holding the patent to be valid as regarded its first and second claims, decreeing that the defendants had infringed those claims, awarding a recovery of profits to the plaintiff from the 12th of August, 1870, the date of the assignment of the entire patent by the patentee to the plaintiff, and referring it to a master to take an account of profits and damages. On the 21st of July, 1884, the master made a report awarding a sum of money in favor of the plaintiff to which both parties [3] filed exceptions. On a hearing the court sustained some of the defendants' exceptions and overruled all others, and rendered a money decree in favor of the plaintiff. Both parties prayed appeals to this court, but the plaintiff did not perfect his appeal. Since the record was filed in this court, the plaintiff has died, and his administrator, Peter Whitmer, has been substituted in his place as appellee.

Only claims 1 and 2 of the patent are involved. The specification states, among other things, that one object of the improvements which constitute the invention set forth in the patent, is to obtain a greater capacity of movement in a floating finger beam, while retaining its connection with a gearing carriage that is drawn forward by a stiff tongue; that, to that end, the first of the improvements of the patentee "consists of the combination of the finger beam with the gearing carriage by means of a vibratable link extending crosswise to the line of draft, a draft rod extending parallel with the line of draft, and two swivel joints, the one for the vibratable link, and the other for the draft rod, so that the finger beam can rise and fall at either end, and rock forward or backward independently of the gearing carriage, while maintaining its connection with it;" and that his "next improvement consists of the combination of the finger beam, gearing carriage, vibratable link, draft rod, and swivel joints, with an arm connected with the finger beam, to enable it to be rocked for the purpose of setting its guard fingers at any desirable inclination to a horizontal line."

The specification further says: "My improvements may be embodied in a machine having the finger beam arranged in advance of the axial line of the shaft or arbor of the driving wheel, or arranged in the rear of that axial line. In the former case, the vibratable link that connects the finger beam with the gearing carriage will be arranged in advance of the driving wheel, and in the latter case in the rear of the driving wheel. In the former case, also, the rod hereinbefore called a 'draft rod' (because the strain to which it is subjected is a pulling strain) becomes a pushing or thrust rod, and connects the inner end of the finger beam with the rear of the gearing carriage. In the for- [4] mer case, the radius bar for the reel and raking platform connects with the rear end of the gearing carriage, and in the latter case with its front end. I prefer to construct a harvesting machine with the finger beam in the rear of the line of the axle of the driving wheel, and, as a description of such a machine, perfected by my improvements, will enable them to be fully understood, all of my improvements are embodied in the harvesting machine of that description which is represented in the accom-

panying drawings, and which is an illustration of the best mode which I have thus far devised of embodying them in a working machine."

There are twelve figures of drawings. The specification states that the machine is what is commonly called a "combined machine;" and is adapted to reaping and mowing; that, when used for the former purpose, it is arranged as represented in figures 1 to 6; that, when used for the latter purpose, certain of its parts are removed, as thereinafter stated, and a grass divider is substituted for the grain divider, at the outer end of the finger beam; and that the gearing which imparts motion to the sickle and reel is mounted upon a carriage, A, which is supported by two running or ground wheels, and is provided with a tongue to which the horses are hitched.

The parts of the specification which relate particularly to the subject matter of claims 1 and 2 are as follows: "The finger beam G of the machine projects at one side of the rear end of the gearing carriage A, and is fitted with guard fingers, H, through the slots of which a scalloped cutter, I, is arranged to reciprocate endwise. The end of this cutter that is nearest the gearing carriage is connected with the crank wrist *g* of the crank shaft D^2, by means of a connecting rod, J. The finger beam is connected with the rear end of the gearing carriage in the following manner: the end of the beam nearer the carriage is provided with a shoe, K, from which lugs *a a* project upward. These lugs are perforated to admit a joint bolt, a^1, which connects the shoe with one end of a vibratable forked link, L, whose other end is connected by a swivel joint, M, with a bracket, N, secured to the rear of the gearing carriage. This swivel joint is formed by a cross [5] head (*m*, Fig. 1^a), the center of which is bored transversely, to permit a journal formed on the end of the forked link L to turn in it. The ends of the cross head *m* are formed into journals, which turn in bearings upon the bracket N. Hence the finger beam can both rise and fall freely at either end, and rock forward and backward without twisting the link that forms its connection with the gearing carriage. Moreover, the axis of the cross head *m* of the swivel joint is arranged in line, or thereabout, with the axis of the crank shaft D^2, that imparts motion to the cutter, so that such rising or falling, or rocking, does not materially change the distance between the crank shaft and the cutter. The shoe K of the finger beam is connected also with the front end of the gearing carriage by a draft rod, O, and the connection between the rear end of this draft rod and the said shoe is a swivel joint, M′, of which the joint pin a^1 of the vibratable link L is the longitudinal axis, and its T-head m^1 the horizontal axis. This swivel joint, therefore, while maintaining a firm connection with the draft rod, gives free play for both the longitudinal and rocking movements of the finger beam. Hence, when the machine is used for cutting grass, the said finger beam may be left free, not only to rise and fall at either end, but also to rock or to be rocked forward and backward, so that the points of its guard fingers incline toward or from a horizontal plane. In order that the finger beam may be rocked by the conductor of the machine, the vibratable link L is fitted with an arm, *l*, whose upper end is connected by a rod with the lower end of a lever, P, that is pivoted to the gearing carriage near its forward end. The upper end of this lever P extends within the reach of the driver, who sits upon the driver's seat, Q, so that he may rock the finger beam by moving the said lever to and fro. This rocking lever P is fitted with a spring bolt, whose end can engage in any one of a number of notches formed in a segment, R, which is attached to the gearing carriage concentrically with the pivot of the rocking lever, so that the finger beam may be fastened in the desired position by the engagement of the spring bolt in the appropriate notch. The rocking lever is fitted with a lever handle, *p*, and rod connecting with the spring bolt, by [6] which the spring bolt may be withdrawn from the notched segment and held disengaged therefrom during the movement of the lever. In order that the connection between the cutter on the finger beam and the crank shaft on the gearing carriage may not obstruct the free rocking of the finger beam, the connecting rod J is connected with the cutter I by means of a swivel joint, S, consisting (see Fig. 1^b) of a head, *s*, that is pivoted to the cutter stock (by a shank that extends lengthwise therewith, and turns in an ear, s^1, secured to the end of the cutter stock), and of a cross pivot, s^2, that passes through the said head and through two ears formed upon the connecting rod J."

There are ten claims in the patent, claims 1 and 2 being as follows: "1. The combination, as set forth, in a harvester, of the finger beam with the gearing carriage, by means of the vibratable link, the draft rod and the two swivel joints M and M^1, so that the finger beam may both rise and fall at either end, and rock forward and backward. 2. The combination, as set forth, in a harvester, of the finger beam, gearing carriage, vibratable link, draft rod, swivel joints, and arm, by which the rocking of the finger beam is controlled."

It will conduce to a solution of the questions involved in the case, to give a history of the progress of the application for the patent through the Patent Office, as gathered from certified copies of those proceedings found in the record: On the 4th of December, 1865, the patentee, Alvaro B. Graham, as assignor to himself, William B. Werden, and Cyrus A. Werden, filed in the Patent Office an application for a patent, which was sworn to by him on the 25th of February, 1864. The specification of this application stated that one object of the invention was the free passage of the finger bar over the ground, and the perfect moving of it to adjust itself to the inequalities of surface over which it might pass; and that another object of the invention was the cutting in a proper manner of lodged grass or grain. It also stated that the machine had a finger bar, I, the inner end of which was attached, by a joint, *h*, to a bar, J, which was at the rear of the main frame, A, and was connected thereto, at its left hand side, by a swivel or universal joint, K, such joint being composed of a rod, [7] *i*, which was allowed to turn in a bearing, *j*, attached to the main frame, the end of the bar J being cylindrical and allowed to turn in the rod *i*; that the joint K admitted of the bar J and finger bar I being raised vertically, and also

admitted of those bars being turned in a more or less inclined position, in their transverse section, to admit of the fingers and sickle being turned more or less down towards the ground, as might be required; that this adjustment of the fingers and sickle was effected through the medium of a lever, M, which was connected by a rod, *l*, with an upright, *m*, on the bar, J; that this lever M might be retained in any desired position, within the scope of its movement, by means of a perforated bar, *n*, into the holes of which a pin on the lever caught; that the finger bar I might be raised separately from the joint *h*, as a center, through the medium of a lever, N, which, like the lever M, was attached to the main frame A, and had a chain or cord attached to its lower end, said chain or cord passing around a pulley, *q*, on the bar J, and being attached to the upper end of an upright, *r*, attached to the finger bar at the joint *h*; that both bars, I and J, might be elevated simultaneously by a lever, O, which was also attached to the main frame A, and bore at its lower end on another lever, P, the outer end of which was connected by a chain, *s*, with the bar J; that the lever O might be retained at any desired point, within the scope of its movement, by means of a rack bar, P'; that, in case an obstruction presented itself to the inner end of the finger bar I, the lever O was actuated in order to raise such end of the finger bar, and if an obstruction presented itself to the outer end of the finger bar, the lever N was actuated; and that the applicant did not claim the connecting of the finger bar I to the bar J, by a joint *h*, for that had been previously done.

There were five claims in the specification, the first two of which were as follows: 1. "The attaching of the bar J to the main frame A by means of the swivel or universal joint K, when used in combination with the finger bar I, attached to it by a joint, *h*, and this I claim irrespective of any peculiar position of the parts or particular application of the same to the frame of the machine, so long as the desired [8] result is obtained." 2. "The arrangement of the lever N, chain or cord *p*, and upright *r*, substantially as shown, for raising the outer end of the finger bar I, as set forth." On the 30th of December, 1865, the Patent Office rejected claims 1 and 2 on a reference to prior patents. On the 24th of March, 1866, the applicant erased claims 1, 2 and 3, and substituted for claim 1 the following: 1. "The combination of the finger bar I and bar J attached to the frame A by means of the universal joint or swivel K, in the manner and for the purpose herein specified." On the 4th of April, 1866, the Patent Office rejected this substituted claim 1, by a reference to a prior rejected application and to a prior patent. On the first of October, 1866, it allowed the two remaining claims applied for, which had been numbered 4 and 5 originally. On the 18th of June, 1867, the applicant filed a withdrawal of the amendments filed March 24, 1866, the effect being to limit the invention claimed under the patent to the two claims allowed October 1, 1866, and the patent was granted July 23, 1867, as No. 67,041, with those two claims, which in no manner relate to any question involved in the present suit.

Prior to such withdrawal of June 18, 1867, and on the 11th of February, 1867, Mr. Graham filed an application which resulted in the patent in suit, No. 74,342, issued February 11, 1868. Claims 1 and 2 of the specification of that application originally read as follows: 1. "The combination, in a harvester, of the finger beam with the gearing carriage, by means of a vibratable link, draught rod, and two swivel joints, so that the finger beam may both rise and fall at either end, and rock forward and backward, substantially as set forth." 2. "The combination, in a harvester, of the finger beam, gearing carriage, link, draught rod, swivel joints, and arm, by which the rocking of the finger beam is controlled, substantially as set forth." There were fifteen claims in all made in the specification. On the 29th of July, 1867, the Patent Office rejected claims 1 and 2 by a reference to prior patents. On the 31st of December, 1867, the applicant amended claims 1 and 2 so as to read as they are in the patent as granted. The changes thus made in [9] those two claims, and which, under the circumstances, were made to secure the issuing of the patent, the claims having been rejected in the shape in which they were first proposed, were these: In claim 1, "the combination as set forth," was substituted for "the combination;" "the vibratable link," for "a vibratable link;" "the draught rod," for "draught rod;" "the two swivel joints, M and M'," for "two swivel joints;" and the words "substantially as set forth" were erased. In claim 2, "the combination as set forth," was substituted for "the combination;" "vibratable link," for "link;" and the words "substantially as set forth" were erased. In the second claim the word "the" was always prefixed to the enumerated elements composing the combination claimed.

The principal question for determination, in the view we take of the case, is that of infringement. The circuit court, in its opinion, delivered on the making of the interlocutory decree (10 Biss. 39, and 11 Fed. Rep. 859), considered especially two prior patents, one granted to David Zug, October 4, 1859, No. 25,697, and the other granted to F. Ball, October 18, 1859, No. 25,797. In considering those patents, on the question of infringement as well as on the question of novelty, the circuit court said: "The two claims of the Graham patent, which are alone in controversy here, are the first and second. The first claim is for a combination of the finger beam with the gearing carriage by means of the vibratable link, the draft rod, and the two swivel joints, M and M', so that the finger beam may both rise and fall at either end and rock backward and forward; and the second claim is the same as the first, with this only added: that an arm is attached to the vibratable link by which the rocking of the finger beam is controlled by the driver. The object of this invention, as set forth in these two claims, seems to be mainly to produce the rocking motion of the finger beam as described and by the method described. In the Ball patent, while there may be said to be something equivalent to the swivel joint M of the plaintiff's machine, where it is attached to the frame, and also something similar to the draft rod and the arm, there is nothing to produce the rocking [10] motion, which is the essential object in the first two claims of the plaintiff's machine; and con-

sequently there is no swivel joint M′, as in the plaintiff's machine; so that there is nothing in the Ball machine to prevent the validity of the combination in the first two claims of the plaintiff's patent. The Zug machine has, if not a swivel joint like that of the plaintiff's at M, where connected with the frame, something which seems substantially similar. It has a vibratable link and it has something which is equivalent to the draft rod, the main difference being that it is attached beneath the shoe instead of above, but there is no swivel joint M′. There is an arm which is attached to the draft rod and shoe by which it can be raised and lowered; but Zug claims in his patent that when the machine is in progress over the field; and when the finger bar strikes any obstacle, there is a device in a box in which the forward part of the draft rod is fastened, by which the finger bar yields to the obstacle; and that there is also a mode by which the vibratable rod is attached to the frame, called 'joint 16,' in his patent, and what has been termed an open clevis, where the vibratable link is connected with the draft rod, by which a motion is given to the finger bar, and thus the finger bar is relieved from the obstacle. Zug does not claim that the finger bar in his machine has a rocking motion, but only that the mode by which the draft rod is fastened and the motion given to the finger bar prevents the obstacle which the machine may meet from doing damage to it. These seem to be the main differences between the two machines, and the question is whether there is anything in the Zug machine to prevent the combination named in the first two claims of the plaintiff's patent from being valid. The defendants' machine has the swivel joint attached to the frame, the vibratable link in the same form as the plaintiff's, and the draft rod attached forward in substantially the same way as the plaintiff's, but instead of having a swivel joint at M′, as stated in plaintiff's machine, forward of the shoe, the draft rod has a swivel joint at the rear end of the shoe; and there is an arm attached to a part of the vibratable link substantially like that of the [11] plaintiff's; and the substantial difference, as it seems, between the plaintiff's device as described in the first and second claims, and that of defendants, is that the draft rod is attached to the rear part of the shoe and not to the forward part, as in the plaintiff's patent. There are also other devices in the defendants' machine which may make it different from the plaintiff's. But as to the swivel joint, the vibratable link, and the mode in which the motion is produced in the finger bar, there does not seem to be much difference in substance; and in both machines, and by substantially the same means, there is produced a rocking motion. In this connection it is noticeable that the defendants, in the claim set forth in the specification of their patent, make a rocking motion of the shoe and cutter a feature of their combination. In their second claim they say that they claim the combination of the 'shoe, and the drag bar extending over and in rear of the shoe, and its swiveled pin connecting it with the rear end of the shoe, whereby the drag bar sustains the thrust of the shoe while leaving it free to rock on its hinges.' Again, in their fifth claim, they say that they claim the combination 'of the shoe, the forked coupling arm, the drag bar extending over and in rear of the shoe, the swivel pin connecting the two, the rocking lever and the detent mounted on the drag bar, and the adjustable link connection between the lever and coupling arm, whereby the shoe readily may be rocked or adjusted.' And again, the motion which seems to be produced in the operation of plaintiff's machine is more distinctly described in the seventh claim made by the defendants in their patent as follows: The combination 'of the shoe, the drag bar, the forked coupling arm,' and the other elements of mechanism before mentioned, 'whereby the shoe is first rocked and then lifted by one continuous movement of the lever.' It must be confessed that the difference between the Zug machine and the first two claims of plaintiff's patent is not very marked. But in view of the description contained in the specifications of Zug's patent and in those of the plaintiff's patent, we are inclined to think that the plaintiff's patent may be sustained on the ground that there is a difference in the manner in which the draft rod [12] is attached to the shoe, and the finger bar to the shoe and to the vibrating link; and that there is also a difference in the manner in which the combination of the various parts are adjusted; and that there is an effect produced in the plaintiff's machine which does not exist in the Zug machine. In the plaintiff's machine there is a rocking motion, and not a mere vibratory motion, such as exists in the Zug machine in consequence of the open clevis; neither is there in the plaintiff's machine the yielding of the draft rod, as described in the Zug patent; and it is obvious, too, from the manner in which the parts are constructed in the Zug machine, that there is only a small vibratory action of the finger bar; so that, on the whole, we think that the combination as described in plaintiff's patent may be sustained. Then, from what we have said, we do not see that there can be any substantial difference between the combination, as described in the plaintiff's machine, of the swivel joints, draft rod, and vibratable link, with the frame and shoe and finger bar, and that of the defendants' machine. The differences which have been stated between the two machines in this respect do not constitute any difference in principle. The one is substantially the same as the other. The additions which have been made to defendants' machine, such as the device by which the pressure of the cutting apparatus upon the ground is regulated, and other devices which have been made, do not affect the combination as claimed in the plaintiff's machine. The attachment of the draft rod to the rear part of the shoe instead of to the front part, which is substantially the only difference that there seems to be in the mode of construction, cannot constitute a difference in principle, and cannot prevent the defendants' machine from being an infringement of the plaintiff's patent. It may be said that there are differences also between the defendants' machine and that of the plaintiff, in the manner in which the arm is attached to the vibratable link, and also as to the mode in which the force applied to the arm may operate upon the finger bar; but these are differences of form and not of substance."

The specification referred to in that opinion [13] as the specification of the defendants, and quotations from claims 2, 5, and 7 in which are made, is a patent under which the defendants' machines were constructed, No. 193,770, granted July 31, 1877, to Leander J. McCormick, William R. Baker, and Lambert Erpelding, assignors to C. H. and L. J. McCormick.

The invention of the patentee is carried back to November or December, 1863, at which time he made a model containing his perfected invention, which he shortly afterwards sent to his patent solicitors, and which was sent to the Patent Office with the application sworn to February 25, 1864, and filed December 4, 1865. The delay seems not to have been attributable to the applicant.

The patents introduced in this case as affecting the questions of novelty and infringement, and which were prior to the invention of Graham, and which seem to be relied on by the appellee, were as follows: To George C. Dolph, No. 18,141, issued September 8, 1857; to W. S. Stetson and R. F. Maynard, No. 24,063, issued May 17, 1859; the Zug patent; the Ball patent; and one to Stephen S. Bartlett, No. 34,545, issued February 25, 1862.

We are of opinion that the circuit court took an erroneous view of the question of infringement. The capacity of the finger beam to "rise and fall freely at either end," spoken of in the specification of the plaintiff's patent, was not a new thing with him, but had been used for many years in mowing and reaping machines, the finger beam moving on a pivot at its inner end; and the plaintiff, in the specification of his patent of July 23, 1867, stated that he did not claim the connecting of the finger bar, I, to the bar, J, by the joint, *h*, because that had been previously done. It was also old to have a lever connected by a loose connection, by which the driver could tip up the front edge of the finger bar arbitrarily, and secure it so that it could not fall below the inclination at which he had set it, although it was left free to tip up further automatically.

The arrangement spoken of in the plaintiff's specification, whereby the finger beam can "rock forward and backward without twisting the [14] link that forms its connection with the gearing carriage," was secured by making the pivot on which the crosswise tilt takes place, at a point in front of the beam, so that the pivot rises and falls with the guard fingers, and an arm is provided by which the movement of the finger beam in both directions is controlled by the driver, instead of its being independent of his control in its downward movement, as was the case in prior machines. It is apparent, from the proceedings in the Patent Office on his application, and from the terms of his specification and of claims 1 and 2 as granted, that the intention was to limit the modification which he made, to the particular location of the swivel joint, M′, on which the crosswise rocking movement takes place, and to the rigid arm by which the positive rocking of the finger beam in both directions is effected and controlled.

In a mowing machine for cutting grass, where it is desirable to cut near to the ground in order to cut and use as much of the grass as possible, the front edge of the finger beam must bear closely on the surface of the ground, with a yielding pressure, so that it will rise freely in order to pass over such irregularities in the surface of the ground as do not require that the finger beam should be bodily lifted. This yielding pressure is secured by a capacity in it to swing upward on its heel as a pivot, because, if its front edge were held rigidly down upon the ground, the guard fingers would be driven into every obstruction. This necessity does not exist in machines for harvesting grain, because in them the finger beam is set several inches above the ground, the grain being the desirable object, rather than the straw, and the carrying of the finger beam at an elevation prevents its meeting with obstructions; and hence there is no such occasion, as in mowing machines, for its front edge being left free to swing upward.

The capacity, if any, which Graham added to the machines in general use, was one for raising and lowering the pivot of oscillation, which had before been stationary, and a further capacity for a positive downward tilt or forward rocking, which enabled the driver to tip up the heel of the finger beam and force the fingers under lodged grain or grass. The rocking forward and backward, spoken of in the plaintiff's specification, is ap- [15] plied to a tilting backward which rocks the front of the finger beam upward, and to a tilting forward which rocks the heel of that beam upward and its front downward. In the defendants' machine there is no such rocking backward and forward, but there is a swinging motion, the same as in the prior Ball patent, the pivot on which the tilting takes place being in the rear of the finger beam, and there being no means of positively tipping the front of the beam downward or of raising its heel to force its front edge and the finger guards downwards. In the Ball patent, the draft rod passes under the finger beam, and in the defendants' machine the draft rod passes over the finger beam, to reach the pivotal point, which is in both cases the same. In both of them, the weight of the finger beam being in front of the pivot tends to hold its front edge down upon the ground; but, when the finger guards strike any elevation, the front edge of the beam swings up freely on its rear pivot, the tendency being for its weight to carry it back to its original position as soon as the elevation is passed. In the Ball patent there is a lever connected with a chain which can raise the finger beam or hold it up, but cannot affirmatively depress it, its downward movement being dependent solely upon the fact that its weight is in front of the pivot on which it turns. In the defendants' machine there is a substitute for the Ball chain, namely: a loose sliding link, which permits of the same upward movement that the chain does, and which cannot force or hold the beam down. In both the Ball machine and the defendants' machine the propelling force from the draft rod is exerted from the pivot in the rear; and in both the front edge of the finger beam, where the guards are situated, is left free for the swinging movement above mentioned.

In contradistinction to this, the pivotal connection between the finger beam and the draft rod in the plaintiff's machine, instead of being at the heel of the finger beam, is placed in front of it, at the swivel joint, M′, and a rigid arm, *l*, is mounted on the vibratable link, so that the beam can thereby be rocked backward and for-

ward by the driver, to tip the heel of the shoe
[16] up and the front down, or the front up and the heel down, the heel of the finger beam being lifted by the forward rocking of the arm *l*, and its front being lifted by the backward rocking of such arm. By the locking of the lever which works the arm, the finger beam can be set at any desired inclination. The movement of the finger beam in each direction is positive. In the defendants' machine, it swings on a pivot at its rear, which is not raised or lowered by the upward or downward tilt of the guard fingers, while in the plaintiff's machine, as the finger beam rocks on the swivel joint M′, the heel of the finger beam is lifted from the ground as the finger guards are turned downward.

In the Zug patent, of October, 1859, there is a finger beam attached to the rear end of the machine by a vibratable link, which is itself attached at its rear end loosely to the machine, and is also fitted loosely within the draft rod, so that there is a considerable rising and falling motion to the front end of the shoe, whereby the guard fingers can be elevated and depressed to a considerable extent, and in substantially the same manner as in the defendants' machine, the raising and lowering of them being accomplished at a similar point as in the defendants' machine, the difference in the rising and falling motion of the finger beam in the Zug and in the defendants' machine being a difference only in degree.

In the Ball patent of October, 1859, there is a finger beam attached by a hinged vibratable link, and there is a draft rod, which is hinged at its front end. A shoe is attached to the rear end of the draft rod, with a free up-and-down hinged joint. The finger beam of the machine is attached in front of this hinge, and such hinged connection admits of the rising and falling of the front of the shoe and of the finger beam. This motion is not a rocking motion, as in the plaintiff's patent, but is substantially the same rising and falling motion that is found in the defendants' machine, the only material difference being that, in the Ball patent, the draft rod extends under the shoe and the finger beam, and prevents them from falling down lower than a horizontal position; whereas, in the defendants' machine, the draft rod extends over the shoe and finger beam to the same point of
[17] attachment as in the Ball patent, and thus the finger beam can fall lower than in the Ball patent, and even to below a horizontal position; but the finger beam in the Ball patent can rise and fall as freely at either end as in the defendants' or the plaintiff's machine, and the crosswise rising and falling motion in the Ball patent is of the same character as in the defendants' machine, but wholly unlike the rocking motion, or the forward and backward motion, of the finger beam in the plaintiff's patent.

In the Bartlett patent, of February, 1862, there is a finger beam attached at its rear by a vibratable link, which has a swivel joint at its outer end and a free joint at its inner end, in connection with a shoe and with a draft rod which extends from the front end of the machine to the rear end of the shoe; and the finger beam is attached to the shoe in front of the vibratable link. There is also a lever which rocks forward and backward, and is so arranged that the finger beam and the draft rod rise and fall, and the finger beam rocks forward and backward, substantially in the same manner as in the plaintiff's patent, though with a less perfect motion. But there is considerable forward and backward rocking motion, and the rocking takes place with substantially rigid lever devices, and there is substantially the same rising and falling motion of the finger beam at either end as in the plaintiff's patent.

In view of this prior state of the art, the question of infringement stands in this way: In the defendants' machine there is, in combination with the gearing frame, a vibratable link connection with the finger beam, not very materially different from the vibratable link connection in the plaintiff's patent; but the draft rod in the defendants' machine is different from that of the plaintiff's patent, in that its forward connection is not substantially a swivel joint, but is so hinged as to afford no torsional action, and the draft rod is connected with the shoe at nearly the extreme rear end of the shoe, while the draft rod in the plaintiff's patent has swivel joints at both its forward and rear ends, and such joints have substantially a free torsional capacity. So, too, the draft rod in the plaintiff's patent is attached to the shoe in front of the finger beam, instead of at the extreme [18]
rear end of the shoe, as in the defendants' machine. As a consequence of these several arrangements, the finger beam in the plaintiff's patent rocks freely, both forward and backward, in such manner that the rear of the finger beam may be elevated and the guards be thrown down, or the front of it may be elevated and the guards be thrown up, with an equal rocking motion in either direction; whereas, in the defendants' machine, when the finger beam is operated upon by the lever, the front part of it merely rises and falls with a swinging motion from its pivoted point in the rear. The defendants' machine differs from the plaintiff's patent in that its finger beam cannot be raised at all at its rear by the lifting lever, and cannot be positively moved downward by that lever. Therefore, as the finger beam in the defendants' machine does not have the motion which results from the combination of the elements specified in the first claim of the plaintiff's patent, and does not "rock forward and backward" in the sense of that claim, or in the sense described in the specification of the plaintiff's patent, it does not infringe such first claim. Nor does it contain the swivel joint M′, specified in the first claim, located and operating as in the plaintiff's patent. The first claim of that patent must in view of the state of the art, and of the special limitations put upon it on the requirement of the Patent Office, be limited to the special construction and arrangement set forth in that claim.

The same views apply to the second claim of the patent, which contains combined all the elements set forth in the first claim, with the addition of the rigid arm, *l*. That arm, in the plaintiff's patent, has a rigid connection with the vibratable link to which it is attached, and through such arm the finger beam is made to rock backward or forward by positive action, in either direction; while in the defendants' machine there is no such rigid arm, but only a connection by which the front of the finger beam can be lifted, while it falls by its

own weight when released, instead of being positively forced down, as in the plaintiff's patent. This species of lifting device was old.

In regard to the extracts set forth in the opinion of the circuit court from the defendants' [19] patent of July, 1877, we are of opinion that the second, fifth and seventh claims of that patent, in speaking of the shoe as "rocking," can only refer to its swinging on a hinge at its rear end: and that the term "rocking" is not used in the sense in which it is used in the plaintiff's patent, because, neither in the defendants' patent nor in their machine has their shoe or their finger beam any such rocking motion as is described in the plaintiff's patent.

It results from these views that, on a proper construction of claims 1 and 2 of the plaintiff's patent, the defendants have not infringed it; and that *the decree of the Circuit Court must be reversed, and the cause be remanded with a direction to dismiss the bill of complaint, with costs.*

---

[19] JAMES T. SARGENT ET AL., Admrs. of H. GORHAM, Deceased, *Appts.*,

v.

EDWIN K. BURGESS.

(See S. C. Reporter's ed. 19-26.)

Letters Patent—construction of.

1. In a suit in equity to recover for the alleged infringement of letters patent No. 223,338 granted to John M. Gorham, January 6, 1880, for an improvement in wash-boards, *held*, that claim 3 of the patent cannot be so construed as to cover a protector which does not have the yielding, elastic or resilient function of the Gorham protector and which is not accompanied by a spring or constructed substantially according to the description in the Gorham specification.

2. Claim 3 of the Gorham patent requires that the protector shall be constructed to fold down substantially as shown. The defendant's protector is not constructed to fold down in the manner of the Gorham protector and is not constructed substantially as shown in the Gorham specification.

[No. 127.]

Argued Dec. 12, 13, 1888. Decided Jan. 7, 1889.

APPEAL from a decree of the Circuit Court of the United States for the Eastern District of Pennsylvania, dismissing a suit for infringement of letters patent. *Affirmed.*

The facts are stated in the opinion.

Messrs. **Geo. H. Christy** and *J. Snowden Bell*, for appellants:

The mere making of a model is not a construction and use of an invention, within the meaning of the Act of Congress.

Cox v. *Griggs*, 2 Fish. Pat. Cas. 174, 176, 177; *Howe* v. *Underwood*, 1 Fish. Pat. Cas. 160; *Many* v. *Sizer*, Id. 17, 20; *Ransom* v. *N. Y.* Id. 270.

No mechanic skilled in the art would find any difficulty in embodying the invention in a practical, operative and effectual form.

Kneass v. *Schuylkill Bank*, 1 Robb, Pat. Cas. 310; *Brooks* v. *Bicknell*, 2 Robb, Pat. Cas. 130; *Doughty* v. *Day*, 9 Blatchf. 263; *Hamilton* v. *Ives*, 3 Pat. Off.Gaz. 31; *Union Paper Bag Co.* v. *Nixon*, 4 Pat. Off. Gaz. 32; *Am. Hyde & L. S. & D. M. Co.* v. *Am. Tool & Mach. Co.* 4 Fish. Pat. Cas. 304.

Messrs. **James Parsons** and **Furman Sheppard**, for appellee:

To produce a patentable device, the exercise of invention must be above ordinary mechanical or engineering skill.

Morris v. *McMillin*, 112 U. S. 244 (28: 702); *Jacobs* v. *Baker*, 74 U. S. 7 Wall. 295 (19: 200); *Stimpson* v. *Woodman*, 77 U. S. 10 Wall. 117 (19: 866); *Pearce* v. *Mulford*, 102 U. S. 112 (26: 93); *Packing Co. Cases*, 105 U. S. 566 (26: 1172); *Hollister* v. *Benedict & B. Mfg. Co.* 113 U. S. 59 (28: 901); *West. Electric Mfg. Co.* v. *Ansonia Brass & C. Co.* 114 U. S. 447 (29:210); *Yale Lock Mfg. Co.* v. *Greenleaf*, 117 U. S. 554 (29: 952).

The omission of one ingredient of a combination claim averts any charge of infringement based on that claim.

Dunbar v. *Myers*, 94 U. S. 187 (24: 34); *Gage* v. *Herring*, 107 U. S. 640 (27:601); *Fay* v. *Cordesman*, 109 U. S. 408 (27: 979).

The combination claimed cannot be patentable.

Pickering v. *McCullough*, 104 U. S. 319 (26: 752); *Hailes* v. *Van Wormer*, 87 U. S. 20 Wall. 353-375 (22:241-250); *Hailes* v. *Albany Stove Co.* 123 U. S. 586 (31: 285); *Mosler Safe & Lock Co.* v. *Mosler*, 127 U. S. 354-363 (32: 182).

A claim cannot be enlarged by the language in other parts of the specification.

Lehigh Valley R. Co. v. *Mellon*, 104 U. S. 112 (26: 639).

Mr. Justice **Blatchford** delivered the opinion of the court: [20]

This is a suit in equity, brought by the administrators of John H. Gorham, deceased, against Edwin K. Burgess, in the Circuit Court of the United States for the Eastern District of Pennsylvania, to recover for the alleged infringement of letters patent No. 223,-338, granted to John M. Gorham, January 6, 1880, for an improvement in wash-board frames.

The following is a copy of the specification and drawings of the patent: "*To all whom it may concern:* Be it known that I, John M. Gorham, of Cleveland, in the County of Cuyahoga and State of Ohio, have invented certain new and useful improvements in wash-board frames; and I do hereby declare the following to be a full, clear, and exact description of the invention, such as will enable others skilled in the art to which it pertains to make and use it, reference being had to the accompanying drawings, which form part of this specification.

"My invention relates to wash-boards, particularly to the combination, with a wash-board, of a protector constructed to bend or yield to pressure and to return to position when said pressure is removed. This protector is to shield the person of the washer from splashing water or suds.

"Protectors have been heretofore employed in connection with wash-boards, and they have been of but two general types—one wherein the protector is rigid and rigidly attached to the wash-board frame. A protector thus constructed and attached is not capable of yielding or moving from its position, when the body of the operator presses against it; and it is on this account frequently objected to. The second type is when the protector is attached to the wash-board frame by a joint or pivot, and is allowed a swinging movement; but it possesses [21]

no elastic or resilient quality or function, and, when moved by pressure, has no power to return again to normal position when said pressure is removed. My invention is designed to overcome the objections and defects presented in these two old types of protectors; and, as said invention broadly comprehends any wash-board protector constructed to bend or yield to pressure and to return to position when said pressure is removed, it is apparent that I am not to be confined to any specific form or mere construction of device, inasmuch as a variety of modified mechanical structures may be adopted in embodying my said invention. I will, however, illustrate and describe one or two effective forms of device according to this invention.

"In the drawings, Figure 1 illustrates a wash-board and its protector made according to my invention. This figure is in longitudinal vertical section, and it represents the protector as laid down upon the face of the board, as packed for shipment. Fig. 2 is a similar view of the same device, only the protector is shown as freed and sprung out into operative position. Fig. 3 is a front view of the device as shown in Fig. 2. Fig. 4 represents a modified form of my device, wherein the protector, instead of being formed from a rigid piece and elastically pivoted to the frame, as shown in Figs. 1, 2 and 3, is made from a piece of rubber, spring metal, or equivalent material, susceptible of itself yielding and returning to position, and this is rigidly fixed to the wash-board frame, as shown. Fig. 5 shows another modified embodiment of my invention, merely illustrating a different spring-coupler, C′, from that shown in Figs. 1, 2 and 3.

"A is the wash-board frame, which may be of any size, description or material. B is the rubbing-surface, which may also be of any character.

[22]

Fig. 1.

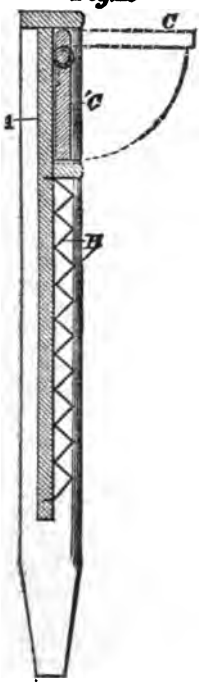

Fig. 2.

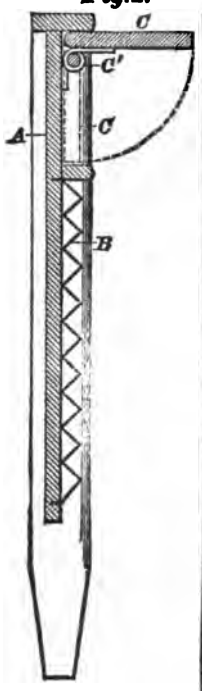

Fig. 3.

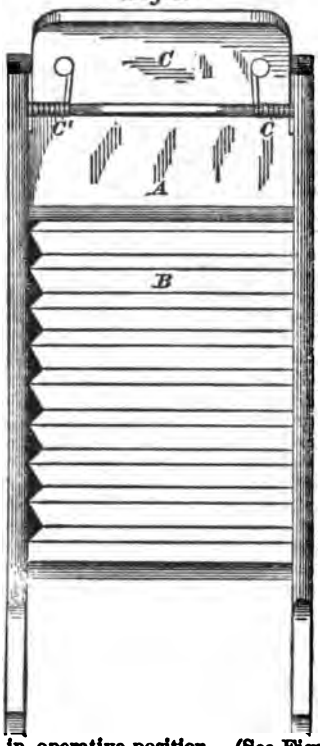

"C is the protector, and C′ a spring, which may be either a coupler between the protector and wash-board frame as shown in Fig. 5 of the drawings, or the protector may be pivoted to the frame and the spring C′ act to push or pull the protector into the position illustrated in Figs. 2 and 3.

"The construction of the device shown in Fig. 4 I have already sufficiently specified in the preceding explanation of the drawings. [23]

"The operation of my device is readily understood. The spring C′, or the elastic character of the thing itself, as shown in Fig. 4, serves always to keep the protector in operative position. (See Figs. 2 and 3.) When the body of the operator presses against it, it yields in such a way as at the same time to press snugly against her person, and also to return at all times to position when said pressure is removed. It thus becomes very effective as a protector, while at the same time it is not wearing to the person or clothes of the operator.

Fig. 4.

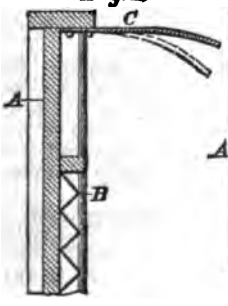

Fig. 5.

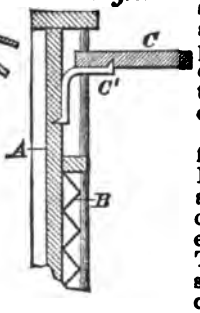

"Another peculiar feature of my wash-board is the flat manner in which it can be packed, as shown in Fig. 1 of the drawings. This is a great convenience and advantage in packing for shipment; and, moreover, when thus packed, the protector is itself protected from injury to which it would otherwise be exposed. This is accomplished by locating the protector, as shown in Figs. 1, 2 and 3 of the drawings, below the crown-piece and between the side pieces of the frame."

The claims of the patent are three in number, as follows: "1. In combination with a wash-board, a protector constructed substantially as described, so as to yield to pressure and to return to position when said pressure is relieved, substantially as and for the purpose shown. 2. The combination, with a wash-board, of a protector and a spring, said spring interposed between the wash-board and protector, and constructed to operate in retaining said protector in its open position and to return it to that position when removed therefrom. 3. In combination with a wash-board, a protector located below the crown-piece and between the side-pieces of the wash-board frame, and constructed to fold down into or upon said wash-board even with or below the general plane of said wash-board frame, substantially as and for the purpose shown." Only claim 3 is alleged to have been infringed.

The defenses set up were want of novelty and noninfringement. Several prior patents were introduced in evidence, as bearing upon the question of the proper construction of claim 3, and upon the question of infringement. They [24] are No. 8161, to William T. Barnes, June 17, 1851; No. 127,325, to John Epeneter and Bernhardt Grahl, May 28, 1872; No. 146,433, to James A. Cole, January 13, 1874; No. 150,315, to Anna Frike, April 28, 1874; and No. 222,846, to Wyatt M. Stevens, December 23, 1879. The circuit court dismissed the bill and the plaintiffs have appealed.

The specification of the Gorham patent clearly shows that the protector whose combination with a wash-board is the subject of the invention, is a protector constructed to bend or yield to pressure, and to return to its position when such pressure is removed, in contradistinction to a protector which is rigid and is rigidly attached to the wash-board frame; and also in contradistinction to a protector which is attached to the wash-board frame by a joint or pivot, and is allowed a swinging movement, but possesses no elastic or resilient function, and when moved by pressure has no power to return again to its normal position when such pressure is removed. The specification states that the invention of Gorham is designed to overcome the defects presented in those two old types of protectors. The invention does not comprehend a protector which is not constructed so as to bend or yield to pressure, and to return to its position when such pressure is removed. The description and drawings of the Gorham protector are limited to such a construction, and do not show or indicate any other.

The operation of the device is stated in the specification to be such that the spring or the elastic character of the protector itself serves always to keep the protector in operative position, because it yields to pressure against it in such a way as always to press snugly against the person, and to return at all times to position when such pressure is removed. This feature of the protector is not claimed to have been infringed by the defendant. The defendant's protector, constructed in accordance with the description contained in letters patent No. 255,555, granted to Charles H. Williams, March 28, 1882, has no spring and no elastic or resilient quality, does not yield to pressure, and has no capacity of returning automatically to its normal position.

In the defendant's structure, the ordinary [25] cap piece of the wash-board has a rounded exterior surface, and its inner surface performs the function of a protector. Upon the upper edge of such cap piece is mounted a supplemental protector, the two parts being locked rigidly together by a tongue-and-groove joint. From the ends of the supplemental protector are extended rigid arms, which are slotted and connected to the side pieces of the frame by means of pins, one of which passes through each slot. By removing the supplemental protector from the cap piece, it can be placed between the side pieces of the frame, so as to stand edgewise therein, by drawing it slightly backward, by then raising it slightly, by then advancing it to the front, and by then dropping it and placing it edgewise within the frame. In this latter position, the structure is adapted for packing. Not only is the defendant's protector without any yielding or resilient function, but it is not pivoted after the manner of the Gorham protector, nor does it fold down in the manner of the Gorham protector, in the sense of the words "fold down," as used in claim 3 of the Gorham patent.

The contention of the plaintiff is that claim 3 of the patent does not require, as an element of the combination covered by it, that the protector should have any yielding, elastic or resilient function, or should be accompanied by a spring; but that it is sufficient if, by any mechanism, it can be so disposed of as to be packed away for convenience in shipment, or for other purposes, in a flat manner, in the vacant space in which it is packed; and that, as the defendant's protector is to a large extent packed away in the same vacant space, claim 3 is infringed. It may be questionable whether, if the claim were to be construed thus broadly, it would not be for merely a new use of a device before used in many things besides wash-boards.

But, in view of the state of the art, as shown by the patents above referred to, and in view of the course of proceeding in the Patent Office on the application for the Gorham patent, we are of opinion that claim 3 of that patent cannot be so construed as to cover a protector which does not have the yielding, elastic or [26] resilient function of the Gorham protector, and is not accompanied by a spring or constructed substantially according to the description in the Gorham specification. Gorham evidently had no idea of such a construction as that of the Williams patent, found in the defendant's wash-board; and no person could, by following the description in the Gorham specification, arrive at the defendant's structure.

Claim 3 of the Gorham patent requires that the protector shall be "constructed to fold down," "substantially as" "shown." The defendant's protector is not constructed to fold down in the manner of the Gorham protector, and is not constructed substantially as shown in the Gorham specification.

The decree of the Circuit Court is affirmed.

[45] THE CITY OF NEW ORLEANS, *Plff. in Err.*,

v.

THE LOUISIANA CONSTRUCTION COMPANY (Limited) ET AL.

(See S. C. Reporter's ed. 45-47.)

Legal and equitable remedies—Louisiana Code—writ of error, when proper.

1. Remedies in the Courts of the United States are at common law or in equity, according to the essential character of the case, uncontrolled in that particular by the practice of the state courts.
2. The objection that an intervention, called a "third opposition" by the Code of Louisiana, cannot be availed of by defendant in execution in regard to property so situated as that involved in this case, should have been made in the circuit court and cannot be properly disposed of on motion to dismiss or affirm.
3. A judgment in a short and summary proceeding, analogous to the statutory remedy given in many of the States to try the right of property at the instance of the party whose property is alleged to be wrongfully seized, is a judgment at law and reviewable upon writ of error.

[No. 1104.]

Submitted Dec. 17, 1888. Decided Jan. 7, 1889.

IN ERROR to the Circuit Court of the United States for the Eastern District of Louisiana, to review a judgment rendered on verdict of a jury against the City of New Orleans upon its "petition of intervention and of third opposition," claiming property to be exempt from execution.

On motion to dismiss or affirm. *Motions denied.*

The facts are stated in the opinion.

Mr. **E. Howard McCaleb**, for defendants in error, in support of motions.

Messrs. **Carleton Hunt** and **Henry C. Miller**, for the City of New Orleans, in opposition.

Mr. Chief Justice **Fuller** delivered the opinion of the court:

By the writ of error in this case a judgment of the Circuit Court of the United States for the Eastern District of Louisiana is brought up for revision, which was rendered by that court, after a trial by jury and on the verdict found, against the City of New Orleans upon its "petition of intervention and of third opposition," claiming certain property to have been exempt from seizure and sale on execution, which had been advertised for sale by the United States Marshal under a writ of *fieri facias* issued upon a certain judgment recovered against said city by the Louisiana Construction Company, one of the defendants in error, and which, as appeared by an amended petition, was sold by said marshal to Isidore Newman, who, with Louis E. Lemaire, attorney in fact of said construction company, and R. B. Pleasants, the United States Marshal, were made parties to said petition as amended.

[46] By articles 395, 396, 397, 398, 399 and 400 of the Code of Practice of Louisiana, when property not liable is seized on execution, the remedy of the owner is by an intervention called a third opposition, on which, by giving security, an injunction or prohibition may be granted to stop the sale. If no injunction is issued, and the sale takes place, if the opposition is sustained, the seizure and sale are annulled, and the property restored. In the case at bar an order of prohibition was directed to be issued upon the city giving security as prescribed. This it failed to do, and the property was sold to Newman, as before stated.

The construction company now moves that the writ of error be dismissed, upon the ground that the cause was in equity, and therefore should have been brought here by appeal, and if that motion is overruled, that the judgment be affirmed.

The rule is thoroughly settled that remedies in the Courts of the United States are at common law or in equity, according to the essential character of the case, uncontrolled in that particular by the practice of the state courts. In *Van Norden* v. *Morton*, 99 U. S. 378 [25:453], where a bill addressed to the Circuit Court of the United States for the District of Louisiana, sitting in chancery, alleged that complainant was the owner of a dredge boat, which had been seized on an execution against another party, and prayed for an injunction, for the quieting of title and possession and for damages, it was held that, under the provisions of the Louisiana Code of Practice pertaining to the subject, the remedy was at law and not in equity, and the bill was for that reason dismissed. But it is urged that there the injunction was sued out by a third person, not originally a party to the cause, claiming ownership of the property seized; that the property was personal; and that it was not burdened with any trust; whereas, it is said that here the city was the defendant in execution; that the property seized was real; that the city claims it as trustee because *locus publicus*; and that the contention of the city involves the elements of trust, injunction, and prevention of cloud on title, all exclusively cognizable in a court of equity.

The circuit court, however, took jurisdiction [47] of the intervention of the city as "third opponent," and the intervention being answered, proceeded to trial on the merits and to judgment accordingly.

The objection of the construction company that third opposition cannot be availed of by a defendant in execution or in regard to such property and so situated, as that involved in this case, should have been made in the circuit court, and cannot be properly disposed of on this motion.

As the judgment stands, it is a judgment in a short and summary proceeding before the court under whose authority the marshal was acting, analogous to the statutory remedy given in many of the States to try the right of property at the instance of the party whose property is alleged to be wrongfully seized, and as such, as determined in *Van Norden* v. *Morton, supra*, is at law, and properly reviewable upon writ of error. The motion to dismiss is therefore denied; and as we do not think there was color for it, the motion to affirm must be denied also.

Motions denied

[73]

JOHNSON N. CAMDEN, *Appt.*,
v.
F. L. B. MAYHEW & CO. ET AL.

(See S. C. Reporter's ed. 73-86.)

Chancery sale—refusal of bidder to pay bid—confirmation of sale—liability on resale—claims of creditors—power of court—practice.

1. The acceptance or rejection of a bid, at a sale under a chancery decree, is within the sound equitable discretion of the court, to be exercised with due regard to the special circumstances of the case and to the stability of judicial sales.
2. Upon the bidder's refusing to pay the amount bid, the court, without confirming the sale by a formal order, may hold him to his bid and order a resale at his risk, both in respect to the expenses of the resale and any deficiency resulting therefrom.
3. Where the decree required that the sale should be made for cash on the day of the sale, the payment in cash on that day is a condition precedent to the right of the purchaser to demand a confirmation of the sale; and the confirmation of the sale by the court is not necessary in order to fix liability on him for a deficiency arising upon a resale.
4. Where a distinct offer is made, in open court, to the bidder, to confirm the sale to him upon his complying with the terms thereof by paying in cash the amount of his bid, and the offer is refused, the court may, without a formal confirmation of the sale, order a resale, holding him responsible for any deficiency resulting therefrom.
5. Where the sale is directed to be for cash and the property is purchased on the sale by a trustee of a part of the creditors, the court is not bound, in deference to their wishes, to depart from the terms of the sale and apply their claims in payment of the purchase money required at the sale.
6. Where a purchaser refuses, without cause, to make his bid good, he may be compelled to do so by rule or attachment issuing out of the court under whose decree the sale is had; it is not necessary that his liability for a deficiency on a resale should be ascertained and enforced by an independent suit.

[No. 80.]

Argued Nov. 14, 15, 1888. Decided Jan. 14, 1889.

APPEAL from an order of the Circuit Court of the United States for the District of West Virginia, requiring appellant to pay the difference between the amount bid by him for certain real estate, offered for sale at public auction under a decree in the same suit, and the amount the same property brought on a resale, had because of his refusal to comply with the terms of the bid. *Affirmed.*

Reported below, *sub nom. Mayhew* v. *West Virginia Oil & Oil Land Co.*, 24 Fed. Rep. 205.

The facts are stated in the opinion.

Messrs. J. B. Jackson and **A. H. Garland**, for appellant:

There can be no liability upon Camden for any deficiency upon a resale of the property, because his bid for the property at the sale made October 1, 1884, was only an offer to take the property at the price bid, should the court receive his bid and confirm the sale.

Kable v. *Mitchell*, 9 W. Va. 517.

Until confirmed by the court the sale confers no rights.

Rorer, Sales, § 106; *Busey* v. *Hardin*, 2 B. Mon. 407; *Blair* v. *Core*, 20 W. Va. 265; *Core* v. *Strickler*, 24 W. Va. 696.

The bidder, not being considered the purchaser until the report is confirmed, is not liable to any loss by fire or otherwise, which may happen to the estate in the interim; nor is he, until the confirmation of the report, compellable to complete his purchase.

2 Dan. Ch. Pr. 1465; 1 Sugden, Vend. & P. 70, 71, 7th Am. ed.; *Ex parte Minor*, 11 Ves. Jr. 559; *Twigg* v. *Fifield*, 13 Ves. Jr. 518; *Anson* v. *Towgood*, 1 Jac. & W 639.

After the report of sale by a master is confirmed there are, according to the English practice, three means of remedying the failure of the purchaser to comply with terms of sale.

Lansdown v. *Elderton*, 14 Ves. Jr. 512; *Harding* v. *Harding*, 4 Mylne & C. 514; *Anderson* v. *Foulke*, 2 Har. & G. 346; *Gordon* v. *Saunders*, 2 McCord, Ch. 151; *Brasher* v. *Cortlandt*, 2 Johns. Ch. 505; 2 Dan. Ch. Pr. 1460, 1461, 1462; *Clarkson* v. *Read*, 15 Gratt. 291; *Hill* v. *Hill*, 58 Ill. 239; Rorer, Sales, § 159.

Messrs. **C. C. Cole**, *W. L. Cole* and **Geo. Wadsworth**, for appellees:

The purchaser at a judicial sale is personally bound by his bid, although in fact he be bidding for another, unless he disclose his agency at the time of the bidding.

2 Jones, Mortg. 1642; *Crockett* v. *Sexton*, 29 Gratt. 47; *Atkinson* v. *Richardson*, 14 Wis. 157; *Gordon* v. *Saunders*, 2 McCord, Ch. 151; *McComb* v. *Wright*, 4 Johns. Ch. 659; *The Kate Williams*, 2 Flipp. 50.

A party who violates a contract cannot successfully insist upon its performance by the other parties to it.

Colson v. *Thompson*, 15 U. S. 2 Wheat. 336 (4: 253); *Boone* v. *Mo. Iron Co.* 58 U. S. 17 How. 341 (15: 172); *Rutland Marble Co.* v. *Ripley*, 77 U. S. 10 Wall. 357 (19: 961).

When property is knocked down to a bidder at a judicial sale by public auction, it constitutes a binding contract from which the purchaser can only be discharged by order of the court for sufficient cause shown.

Blossom v. *Milwaukee & C. R. Co.* 72 U. S. 3 Wall. 196 (18: 43); *Miller* v. *Sherry*, 69 U. S. 2 Wall. 238 (17: 827); *Gordon* v. *Saunders*, 2 McCord, Ch. 151; *Vance* v. *Foster*, 9 Bush, 389; *McLaren* v. *Hartford F. Ins. Co.* 5 N. Y. 151; *Tripp* v. *Cook*, 26 Wend. 143; *Duncan* v. *Dodd*, 2 Paige, 99; *Fuller* v. *Van Geesen*, 4 Hill, 173; *Williamson* v. *Dale*, 3 Johns. Ch. 290; *Jackson* v. *Warren*, 32 Ill. 331; *Comstock* v. *Purple*, 49 Ill. 158; *Hill* v. *Hill*, 58 Ill. 239; *Gross* v. *Pearcy*, 2 Patt. & H. (Va.) 485; *Graffam* v. *Burgess*, 117 U. S. 180 (29: 839).

Mr. Justice **Harlan** delivered the opinion of the court:

This is an appeal from a final order in the suit, in the court below, of *Mayhew* v. *West Virginia Oil and Oil Land Co.* [24 Fed. Rep. 205], requiring the appellant Camden to pay [74] the difference between the amount bid by him for certain real estate offered for sale, at public auction, under the decree in that suit, and the amount the same property brought on a resale had because of his refusal to comply with the terms of his bid. In the order of resale the court reserved, for future determination, the question as to his liability for any deficiency in the amount the property might bring.

The history of the proceedings out of which the present appeal arises, so far as it is necessary to be stated, is as follows:

By a decree rendered, November 17, 1883, in the above suit, it was adjudged that the

West Virginia Oil and Oil Land Company was indebted, in specified amounts, to various creditors, who were entitled to be paid out of the property in question, according to certain priorities, and that upon its failure to pay them, within a prescribed time, the property should be sold at public auction, "upon the terms *cash in hand on the day of sale.*" The decree shows that William D. Thompson, Richard A. Storrs, and Heman Lewis held debts that were to be first paid, equally and ratably, out of the proceeds of sale. The other debts, made liens upon the property by the decree, were held by James H. Carrington, A. C. Worth, W. H. Beach, the Toledo National Bank, R. S. Blair, Benjamin B. Valentine and Heman Loomis.

Before the property was offered for sale, a writing was prepared purporting in its caption to be an "agreement made this — day of November, 1883, between J. N. Camden, J. H. Carrington, W. H. Beach, A. C. Worth, Toledo National Bank, R. S. Blair, B. B. Valentine and Heman Loomis." It provided, among other things, that Camden should purchase the property, when sold under the decree, for the mutual benefit of "the parties hereto," if it sold for a sum not exceeding the aggregate amount of the claims against it, including interest and costs; that if he bought, he should, as agent and trustee of the parties, apply their claims in payment of the purchase money required at the sale, and place on record a declaration of trust showing that the property was held by him in trust for the payment of said debts, but that it should belong to him, in fee simple, when he paid them off; the rents, issues and profits thereof, after deducting necessary expenses, to be applied by the trustee as follows: [75]

"1. The balance, if any, due to J. N. Camden, assignee of W. D. Thompson, shall be fully paid. 2. Then forty per cent of the proceeds of said property shall be paid to Heman Loomis and sixty per cent thereof to the said Carrington, Worth, Beach, Toledo National Bank, Blair and Valentine, according to their rights and priorities, as fixed by the said decree, as between the six parties last named, until they and each of them are fully paid. 3. Then sixty per cent of said proceeds shall be paid to said Carrington, so far as to reimburse and indemnify him such sums of money, if any, as he may be held liable for as maker, acceptor, or indorser of two certain bills of exchange, for the payment of which the said West Virginia Oil and Oil Land Company is primarily liable, one of which bills is supposed to be held by Marietta Arnold, of Michigan, and is for the sum of $1,500, and the other is held by the National Bank of Commerce in New York, and is for the sum of $2,481.89. 4. After the payment of the foregoing amounts the said property shall be held in trust for the payment of any balance due the said Heman Loomis until the same is fully paid."

This writing was signed by all the parties named in its caption, except Beach and the Toledo National Bank.

It should be here stated that before any sale took place several judgment creditors of the West Virginia Oil and Oil Land Company were allowed to intervene in the cause by petition, each asserting a right to have his demand paid out of the proceeds; some of them claiming priority over any creditor whose debt had been specifically provided for by the decree.

On the first of May, 1884, the property was offered by commissioners for sale at public auction, and Charles H. Shattuck became the purchaser at the price of $163,000, although he was at the time special receiver of the rents, profits and product arising therefrom. He was personally interested in his bid to the extent of about $20,000. Who his associates were is not disclosed by the record. The sale was duly reported, the commissioners receiving from Shattuck on the day of sale the entire amoun' bid by him. [76]

William P. Thompson and Oliver H. Payne, with William N. Chancellor as their surety, having executed a bond conditioned that if the property was resold they would bid the sum of $173,000, and having deposited the sum of $10,000, as additional security, the court directed a resale, and required the commissioners to return to the purchaser (which they did) the moneys theretofore received from him.

The next sale occurred on the first day of October, 1884, when Thompson and Payne, by Camden, acting as their agent, bid the sum of $173,000. But Camden bid, in his own name, the sum of $173,050, and, being the highest bidder, was declared the purchaser. In their report of sale the commissioners state:

"The said Camden did not, and has not as yet, paid to your commissioners the sum of money so bid and offered by him for said property as aforesaid, or any part thereof; but when your commissioners required the cash from said Camden, pursuant to the terms of said sale, he tendered to us a paper purporting to be a copy of a contract in writing made between several of the creditors mentioned in said decree of the 17th of November, 1883, authorizing the said Camden, as the agent or trustee of the said creditors who signed said contract, to purchase the said property at any sale thereof that might be made under said decree, and assigning to him the amounts decreed in favor of each of said several creditors, for the purpose of his using and applying the same in payment of the sums so bid by him for said property. Said copy of the contract, with the paper thereto attached, signed by Heman Loomis, by B. M. Ambler, his attorney, bearing date September 30, 1884, is herewith filed. Said Camden also exhibited to your commissioners the original of the said contract from which the copy hereto attached was made. Your commissioners declined to receive the said contract in payment, in whole or in part, of the purchase money so bid by said Camden for said property, or to accept anything in payment thereof except lawful and current money of the United States, and this the said Camden has not as yet paid." [77]

The "paper" here referred to was a letter from Loomis, in which he notified Camden that the latter would be held liable if he did not buy the property pursuant to the terms and conditions of the writing of November, 1883.

On the 6th of October, 1884, Camden filed his petition in said suit, in which he states that it was distinctly agreed by all whose names are mentioned in its caption, that he should, as

their agent, purchase the property, and that each of them did, in person, or by their representatives, assent to that contract and its terms. He alleges: "Your petitioner now discovers that the paper was not actually signed by W. H. Beach or by said bank. He believes and charges that both are bound by said agreement though they did not sign the same, but to avoid any vexatious litigation your petitioner is willing to pay, if required by the court, the full amount of the claims of said Beach and of said bank in cash. Your petitioner prays that, the premises being considered, he may be allowed to apply the claims and debts adjudged by said decree in discharge of his liability for the purchase money; that his compliance with the terms of said contract may be considered and decreed a compliance with the terms of said sale; that the said contract may be received in discharge of his bid; that the sale be confirmed, and that a deed be made to your petitioner for the said property, and that the court will make such further order or decree and grant such other and general and further relief in the premises as your honors may deem right, as in equity may be proper."

Exceptions were filed by Carrington, Worth, Beach, the Toledo National Bank, Valentine and Blair to the report of sale, and, on their motion, a rule was awarded against Camden to show cause why he should not pay the sum of $173,050 bid by him for the property, or why the sale should not be set aside, and a resale had at his risk and cost. His petition above referred to was accepted as his answer to that rule. After answers filed by various creditors to Camden's petition, the court, upon application of Thompson and Payne, made an order canceling their bond, and ordering that the $10,000, deposited in the registry of the court, be returned to them, which was done. Subsequently a motion was made by several creditors to set aside that order as having been improperly procured and made, without notice to them.

[78]

The exceptions to the report of sale were sustained, the sale set aside, and the commissioners directed to resell the property at the cost of Camden for cash in accordance with the original decree; and "If the said property shall be sold for a less sum than $173,050, the said bid of the said Camden, the court reserves for future determination in this cause the question whether the said Camden will be required to pay the deficiency."

The third sale occurred March 17, 1885, and the property then brought only $119,100, Shattuck becoming the purchaser, and paying that amount in cash to the commissioners. To this sale certain creditors filed exceptions on the ground, among others, that the amount bid was grossly inadequate. In addition, some of them filed petitions which Camden answered, whereby an issue was made as to the confirmation of the last sale, and as to his liability for the deficiency. Upon these matters the parties took proof. The cause was heard before *Chief Justice* Waite, when a final order was made, June 6, 1885, reciting, among other things, that the court was of opinion that, if the last sale was confirmed, Camden, by virtue of his bid, was liable to pay the difference between the sum of $173,050 and the amount, $119,100, bid by Shattuck, and all costs rendered necessary by his failure to comply with the terms of sale, and that the last sale to Shattuck should be confirmed, unless either Camden or Thompson and Payne would take the property at the amounts of their respective bids.

The record shows that after announcing this opinion the court offered Camden, who was then present, with his counsel, the privilege of taking the property at the sum bid by him, and of having his purchase confirmed, if he would pay in cash the amount bid by him. This offer was refused, Camden declaring in open court that he would not take the property unless the sale was confirmed on the basis of the alleged contract of November, 1883, between him and others. The court then called on him, as the agent of Thompson and Payne, to elect for them whether they would take the property at the sum he had bid for them, and pay the cash therefor; and he thereupon declared that, while he had authority to make the bid originally, he had not authority to make an election for them under the offer now made. An order was thereupon, May 15, 1885, entered, vacating the order of the third day of November, 1884, canceling the bond of Thompson, Payne and Chancellor, confirming the last sale of Shattuck, and directing the commissioners, by proper deed, to convey the property to him.

[79]

It was further decreed that Camden pay into the registry of the court, for the benefit of such of the parties to the suit or other persons as might be entitled thereto, the sum of $53,950, with interest, and the costs rendered necessary by his failure to comply with the terms of his bid in cash. *Mayhew* v. *West Virginia Oil & Oil Land Co.* 24 Fed. Rep. 205. This is the decree which is here for review upon Camden's appeal.

It is undoubtedly true that Camden's bid of $173,050 was, in legal effect, only an offer to take the property at that price; and that the acceptance or rejection of that offer was within the sound and equitable discretion of the court, to be exercised with due regard to the special circumstances of the case and to the stability of judicial sales. *Milwaukee & M. R. Co.* v. *Soutter*, 72 U. S. 5 Wall. 662 [18: 680]; *Williamson* v. *Dale*, 3 Johns. Ch. 290, 292; *Kable* v. *Mitchell*, 9 W. Va. 492, 509; *Core* v. *Strickler*, 24 W. Va. 696; *Busey* v. *Hardin*, 2 B. Mon. 407, 411; *Hays' App.* 51 Pa. 58, 61; *Childress* v. *Hurt*, 2 Swan, 489; *Duncan* v. *Dodd*, 2 Paige, 100, 101. It is further contended that an acceptance of that offer could only have been manifested by an order confirming the sale; and as no such order was in fact made, that Camden could not be held liable for a deficiency arising upon a resale of the property. In support of this position his counsel cite Daniell's Chancery Practice and Pleading, Vol. 2, *1281, Cooper's ed., in which it is said: "The rule that the master's report of a purchase must be absolutely confirmed before the contract can be considered as binding, applies equally to cases in which it is sought to compel a purchaser to complete his purchase, as where it is sought to enforce the contract against the vendor. As a preliminary step, therefore, towards enforcing the completion of the contract, it is necessary to have the report confirmed." The present case, however, is not one in which it is

[83]

sought to compel the purchaser to complete his purchase. It may be that if the court below had determined to hold Camden to his bid for the property, a necessary preliminary step to that end would have been the formal confirmation of the sale, and, perhaps, the tender of a deed, to be followed by an order compelling him to pay the whole amount that he offered. But it was not restricted to that particular mode of securing the rights of the parties for whose benefit the property was sold; for, upon appellant refusing to pay the amount bid, the court, without confirming the sale by a formal order, could have held him to his offer, and ordered a resale in the mean time at his risk, both in respect to the expenses of the resale and any deficiency resulting therefrom. The latter course was approved by *Lord* Cottenham in *Harding* v. *Harding*, 4 Myl. & C. 514, and was in accordance with previous decisions. *Saunders* v. *Gray*, 4 Myl. & C. 515 note (a); *S. C. Gray* v. *Gray*, 1 Beav. 199; *Tanner* v. *Radford*, 4 Myl. & C. 519 note. So in Daniell's Chancery Pr. & Pl. (Vol. 2, *1282): "According, however, to the present practice, a more complete remedy is afforded against the purchaser refusing, without cause, to fulfill his contract; for the plaintiff may obtain an order for the estate to be resold, and for the purchaser to pay as well the expenses arising from the noncompletion of the purchase, the application, and the resale, as also any deficiency in price arising upon the second sale."

In view of the terms of the decree of November 17, 1883, there is no ground for the contention that the confirmation of the sale to Camden was necessary in order to fix liability on him for the deficiency arising upon the resale. The decree expressly required that the sale should be made "upon the terms, cash in hand on the day of sale;" thus practically making the payment in cash on the day of sale of the sum bid a condition precedent to the right of the purchaser to demand a confirmation of the sale. The commissioners appointed had no authority to accept from the purchaser anything but cash, nor could they postpone payment of the sum offered beyond the day of sale. They conformed in all respects to the terms of the decree, and Camden bid in his own name, without any previous notice to them that he represented others in so bidding, or that he desired or intended to use the debts of particular creditors in making payment in whole or in part. His application to the court, after the report of sale, that he be permitted to complete his purchase by using the alleged "contract" of November, 1883, was properly denied, for several reasons: *First*, the writing of that date could not become a contract binding upon those signing it until it was executed by all whose names appear in its caption; *second*, after the original decree was passed, and before the first sale took place, judgment creditors, for whom the decree made no provision, intervened in the cause, claiming a lien upon the proceeds of any sale that might be made, some of them asserting priority even over the creditors named in the decree; *third*, the court was not bound, in deference merely to the wishes of a part of the creditors, to depart from the terms of sale, especially as the creditors whose names appear in the alleged contract of November, 1883, did not, prior to the sale, ask such modification of those terms as would enable them to use their claims in purchasing and paying for the property.

[84]

But if there was any ground to insist that a confirmation of the sale was necessary before Camden could be made liable for the deficiency resulting from the resale, all difficulty upon that point was removed by the distinct offer made in open court, to confirm the sale to him, upon his complying with the terms thereof, by paying in cash the amount of his bid. This offer having been refused, and the court having been thereby informed that he did not wish to complete the purchase according to the terms of the decree and of his bid, there was no necessity to go through the form of confirming the sale to him, and then, immediately, ordering a resale, at his risk and cost; but, as we have seen, the court was at liberty, without such formal confirmation, to order a resale, holding him responsible for any deficiency resulting therefrom.

[85]

The only question that remains to be considered is whether the liability of Camden for the deficiency in the price of the property on the last sale ought to have been ascertained and enforced by an original, independent suit. We are of opinion that the mode adopted in the present case was entirely regular.

Where a purchaser refuses, without cause, to make his bid good, he may be compelled to do so by rule or attachment issuing out of the court under whose decree the sale is had. It was so held in *Blossom* v. *Milwaukee Railroad Company*, 68 U. S. 1 Wall. 656 [17: 673], where it was said that a purchaser or bidder at a master's sale in chancery subjects himself *quoad hoc* to the jurisdiction of the court, and can be compelled to perform his agreement specifically. In *Lansdown* v. *Elderton*, 14 Ves. Jr. 512, a motion that the person reported to be the best bidder before the master pay within a given time the purchase money, or stand committed, was sustained by *Lord Chancellor* Eldon, who observed that the purchaser could not be permitted to disobey an order, more than any other person. That case was followed in *Brasher* v. *Van Cortlandt*, 2 Johns. Ch. 506, where *Chancellor* Kent, after observing that the purchaser ought to be compelled to complete the purchase, and citing *Lansdown* v. *Elderton*, said: "If no order of this kind could be made, in this case, it would follow that not only the purchaser, but the committee of the lunatic, would be permitted to baffle the court, and sport with its decree . . . I have no doubt the court may, in its discretion, do it in every case where the previous conditions of the sale have not given the purchaser an alternative." See also *Blossom* v. *Milwaukee Railroad Company*, 70 U. S. 3 Wall. 196, 207 [18: 43, 46]; *Smith* v. *Arnold*, 5 Mason, 414, 420; *Requa* v. *Rea*, 2 Paige, 341; *Casamajor* v. *Strode*, 1 Sim. & Stu. 381; *Anderson* v. *Foulke*, 2 Har. & G. 346, 362, 373. If, as is clear, the purchaser can be required, by rule or attachment, to pay into court the entire sum bid by him and thus complete his purchase, it is difficult to see why a bidder, sought to be made liable for a deficiency resulting from a resale caused by his refusal to make his bid good, may not be proceeded against in the same suit by rule, or in any other

[86]

mode devised by the court that will enable him to meet the issue as to his liability. That issue in the present case was tried upon pleadings and proof, and there is no pretense that the appellant had not full opportunity to present his defense before the final order now under review was made.

It is suggested by the learned counsel for the appellant that his client occupies an anomalous position, being required to pay a very large sum, without getting anything in return therefor. It is only necessary to say that, even if the late Chief Justice was mistaken in supposing that the appellant was directly or indirectly interested in the last purchase by Shattuck, his failure to obtain a conveyance of the property was due entirely to his persistent refusal to comply with the terms of his own bid, made with full knowledge of the terms of sale.

Decree affirmed.

---

[128] WILLIAM H. INMAN ET AL., Partners, under the Firm Name of INMAN, SWANN & Co., *Plffs. in Err.*,

v.

THE SOUTH CAROLINA RAILWAY COMPANY.

(See S. C. Reporter's ed. 128-141.)

Common carrier—contract relieving from liability—bill of lading—carrier's right to insurance—surety—insurer's right of subrogation—rights of insurer.

1. Reasonable limitations upon the responsibility of a common carrier may be imposed by contract; but the carrier cannot, by contract with the owner of the goods, exempt himself from liability for his own negligence; and, in case of loss, the presumption is against the carrier.

2. Refusal by the owners to enter into contract that the carrier shall not be liable unless the owners shall insure for his benefit, is no defense to an action to compel him to carry.

3. A clause in a bill of lading that the carrier incurring a liability for loss or damage, shall have the benefit of any insurance which may have been effected upon or on account of the goods, together with the fact that the carrier has not received such benefit, is no defense to an action against the carrier for not safely carrying and delivering the goods, and for their loss by fire through the carrier's negligence.

4. A clause in a bill of lading that the carrier, if he becomes liable for loss of the goods, shall have the benefit of any insurance which may have been effected thereon, does not compel the owner to insure for the benefit of the carrier; but if the owner has insurance at the time of the loss, which may be made available to the carrier, or which he has collected without condition, before bringing suit against the carrier, and which he wrongfully refuses to allow the carrier the benefit of, a counterclaim therefor may be sustained in favor of the carrier.

5. Where, in the order of ultimate liability, that of the carrier is primary and that of the insurer secondary, the insured can, in the absence of provisions otherwise controlling the subject, proceed against the party secondarily liable; but, when he does so, he is bound to give to the latter the benefit of the remedy against the party principal.

6. Where the owner has taken out policies on the goods which contain the provision that, in case of loss or damage under the policies, he, by accepting payment therefor transfers to the insurers his claim for loss or damage against the carrier for their benefit, and that, in event of loss, he agrees to subrogate to the insurers all his claims against the carrier not exceeding the amount paid by the insurers, any act of the owner to defeat his claim against the carrier would operate to cancel the liability of the insurers. Such policies could not, therefore, be made available for the benefit of the carrier, under the clause in the bill of lading above mentioned.

7. Under such policies, the insurers could require the owners to pursue the carrier in the first instance, and decline to indemnify them until the question and the measure of the carrier's liability was determined.

[No. 86.]

Argued Nov. 15, 16, 1888. Decided Jan. 14, 1889.

IN ERROR to the Circuit Court of the United States for the District of South Carolina, to review a judgment in favor of defendant to recover damages for the loss of goods which the defendant, as a common carrier, had received at Columbia, South Carolina, to be carried to Charleston, in that State, and there delivered to a connecting carrier to be transported to New York, and which it was alleged the defendant did not safely carry and deliver, but which were, while in defendant's possession as a carrier, destroyed by fire by its negligence. *Reversed.*

Statement by *Mr. Chief Justice* **Fuller**: [129]

William H. Inman, John H. Inman, James Swann, Bernard S. Clark, and Robert W. Inman, copartners in business under the firm name of Inman, Swann & Company, brought suit against the South Carolina Railway Company, in the Circuit Court of the United States for the District of South Carolina, on the 18th of July, 1884, to recover damages for the loss of 248 bales of cotton (out of 809 bales), which the defendant, as a common carrier, had received at Columbia, South Carolina, to be safely carried for certain freight money to Charleston, in that State, and there delivered to a connecting carrier to be transported to New York, and which, the plaintiffs averred, the defendant did not safely carry and deliver, but which were, while in the defendant's possession, custody and control as a common carrier, "by the carelessness and negligence of the defendant, its officers, agents and servants, destroyed by fire."

In its answer the defendant admitted the [130] shipment, names of shippers, place of shipment, and number of bales shipped; and averred "that at the date of the receipt and shipment of said cotton bills of lading were given therefor, in which were stated the conditions, stipulations and agreements upon which said cotton should be carried by the railroad company receiving it, and by the connecting roads, which bills of lading and the conditions, stipulations and agreements thereof, were received and accepted by the plaintiffs, and constitute the contract between them and the defendant;" that the cotton was received "subject to the conditions, stipulations and agreements of said bills of lading," and that the 248 bales were destroyed by fire; but denied, as a first defense, the allegations in respect to negligence; and, as a second defense, stated "that among other stipulations and agreements in said bills of lading under which said cotton so destroyed by fire was carried is the following, to wit: 'And it is further stipulated and agreed that in case of any loss or damage done to or sustained by any cotton herein receipted for during transportation, whereby any legal liability may be in-

curred by the terms of this contract, that the company alone shall be held responsible therefor in whose actual custody the cotton may be at the time of the happening of such loss or damage, and the company incurring such liability shall have the benefit of any insurance which may have been effected upon or on account of said cotton;' that the plaintiffs had fully insured said cotton so destroyed by fire, in solvent companies, from risks, among which fire was one, and that at the time of the occurrence of said fire said cotton was fully covered by insurance; but that this defendant has not had the benefit of such insurance, nor have the plaintiffs given or offered to give it the benefit of such insurance."

The bill of exceptions states that the plaintiffs, to maintain the issue on their part, examined Bernard S. Clark (one of the plaintiffs), who proved the delivery of the cotton to the Greenville and Columbia Railroad, to be carried to the plaintiffs at New York, the receipt of the cotton by the defendant as a connecting carrier, its destruction by fire at [131] Charleston, on the 29th day of October, A. D. 1883, while in the custody of the defendant, awaiting delivery to the next connecting carrier, and that the value of the cotton, less freight, was $10,717.21; that the form of the bills of lading given to the agent of the plaintiffs by the Greenville and Columbia Railroad Company, the first carrier, was as set out, and contained the clause above quoted.

Upon examination by defendant, the witness testified that plaintiffs had open policies of insurance in the Phœnix, Mechanics' and Traders', and Greenwich Insurance Companies, but had not received any money for the loss occasioned by the burning of the cotton in question; that the insurance companies had signed certain memoranda which witness produced; that witness instructed Mr. Gallagher, an insurance adjuster at Charleston, to bring suit if defendant did not pay; that witness did not know that Gallagher represented the above named insurance companies, but he had said there would be no expense to plaintiffs; that "by our policies, in case of loss, we have to pay 4 per cent on that loss, to keep our policy good for $20,000 all the time. My object is to get this money from the railroad companies and save this 4 per cent, and $150 average comes in there, and in case I don't get it from them to fall back on my insurers—the insurance companies—and make them pay it. That is the exact reason, and if I don't get it from them the idea is that I will fall back on the insurance company." On redirect examination the witness testified that the plaintiffs were the owners of the cotton, and did not authorize their agent to take bills of lading with insurance clause, but plaintiffs had received the balance of the cotton and settled for the freight on it under the same bill of lading; that the agent "had authority to take bills of lading for the cotton, but he had to accept what the company would give him or no bill of lading."

The policy issued to plaintiffs by the Mechanics' and Traders' Insurance Company on cotton burned bears date September 7, 1883, and contains the following provisions:

"It is also agreed and understood that, in case of loss or damage under this policy, the assured, in accepting payment therefor, hereby [132] and by that act assigns and transfers to the said insurance company all his or their right to claim for loss or damage as against the carrier or other person or persons, to inure to their benefit, however, to the extent only of the amount of the loss or damage and attendant expenses of recovery paid or incurred by the said insurance company; and any act of the insured waiving or transferring or tending to defeat or decrease any such claim against the carrier or such other person or persons, whether before or after the insurance was made under this policy, shall be a cancellation of the liability of the said insurance company for or on account of the risk insured for which loss is claimed . . . In event of the loss the assured agrees to subrogate to the insurers all their claims against the transporters of said cotton, not exceeding the amount paid by said insurers."

Similar provisions are contained in the policy issued by the Greenwich Company to the plaintiffs on cotton destroyed. The policy issued by the Phœnix Insurance Company on said cotton contained the following provision: "In case of any agreement or act, past or future, by the insured, whereby any right of recovery of the insured against any persons or corporations is released or lost, which would, on acceptance of abandonment or payment of loss by this company, belong to this company but for such agreement or act, or, in case this insurance is made for the benefit of any carrier or bailee of the property insured other than the person named as insured, the company shall not be bound to pay any loss, but its right to retain or recover the premium shall not be affected;" also the further provision, "that in event of loss the insured agrees to subrogate to the insurers all their claims against the transporters of said cotton, not exceeding the amount paid by said insurers."

The memoranda referred to as signed by the insurance companies on the dates named are as follows:

"New York, Nov. 17, 1883.

"To Inman, Swann & Co.:

"In accordance with the provision of this policy the estimated loss sustained by this company of $3,667 in consequence of the fire [133] at Charleston, S. C., about Oct. 29, '83, is hereby reinstated and $114.90 additional premium is charged by this company therefor, it being fully understood and agreed that when the above loss is finally adjusted the amount reinstated and the premium charged shall be made correct."

"Attached to this policy, 21,773."

"New York, Dec. 1, 1883.

"It is hereby understood and agreed by the undersigned companies insuring Messrs. Inman, Swann & Co. that proofs of loss by fire at Charleston, S. C., of Oct. 29, 1883, presented this day, are to be considered as filed on November 17, as all papers and vouchers to prove such loss were forwarded by Messrs. Inman, Swann & Co., with their consent, to the South Carolina R. R. Co., to collect loss from them as common carriers, which, however, is not to

prejudice Messrs. Inman, Swann & Co's claim against the undersigned insurance companies."

"New York, Jan. 18, 1884.

"The undersigned companies having been notified by Messrs. Inman, Swann & Co., of loss by fire at Charleston, S. C., on or about Oct. 29, '83, and proofs of loss having been presented to the South Carolina R. R. Co., direct, on Nov. 17, '83, with consent of said insurance companies, which, however, it was agreed upon should not prejudice the assurer's claim against them, the claims having been agreed upon as filed with insurance companies on said Nov. 17, in case the railroad should refuse to pay, and the claim being due on Jan. 17, 1884, Messrs. Inman, Swann & Co. will still use every effort to collect the claim direct, and the undersigned insurance companies hereby agree to pay them (six) 6 per cent interest from January 17, '84, to the time when claim is collected. This agreement, however, is not to prejudice their claim against the undersigned insurance companies."

It was conceded upon the argument that the bills of lading were dated October 18, October 24, October 25, and October 27, 1883, and were [134] signed for the Columbia and Greenville Railroad Company and the companies constituting the through line, of which defendant was one, "separately but not jointly;" and that the policies of insurance were dated August 29, September 6, and September 7, 1883, and expired August 29, 1884, and contained these clauses: "The total amount of each and every loss, less $150 to be deducted in lieu of average, shall be paid within thirty days after receipt of proofs of loss;" and "that, in the event of loss, the assured agree to pay the insurers additional premium or premiums at the rate of 4 per cent on the amount of such loss or losses, and this policy is thereby to be reinstated and in force to the full amount of $20,000, unless either party desire the cancelment of same."

At the request of the defendant and subject to plaintiffs' exceptions, the court gave to the jury the following instructions:

"*First.* That the bill or bills of lading under which the cotton of plaintiffs in this case was transported by the defendant constituted the contract of the parties, and the plaintiffs are bound by the stipulation that the defendant company 'shall have the benefit of any insurance that may have been effected upon or on account of said cotton."

"*Second.* That the plaintiffs, before they can recover against defendant here, must show that they have performed their part of this contract by proving that they have given to the South Carolina Railway Company the benefit of the insurance, or that they have been ready to perform their contract by tendering such benefit, and that the same has been refused.

"*Third.* That if the jury find that an agreement was made between plaintiffs and their insurers by which the insurers waived proofs of loss and admitted the claim of plaintiffs to be due by them on the first of January, 1884, and plaintiffs agreed to give time upon said claim to the insurers and meantime to press the claim for the cotton against the South Carolina Railway Company, defendant, in consideration of the payment to plaintiffs by their insurers of 6 per cent interest per annum on said admitted claim from January 1, 1884, then plaintiffs cannot recover, and verdict must be for defendant."

The plaintiffs requested the following instructions, which the court refused, and plaintiffs excepted: [135]

"*First.* That the stipulations in the bills of lading giving the defendant the benefit of insurance effected by the plaintiffs is unreasonable, contrary to public policy, and the duties and obligations imposed by law upon carriers, and therefore void.

"*Second.* That if the stipulation in the bills of lading under which the cotton of the plaintiffs was to be transported by the defendant giving to the carrier the benefit of insurance is valid, then such stipulation only entitles the defendant to such insurance upon payment by it of plaintiffs' loss, unless the plaintiffs have already been paid by the insurer.

"*Third.* That if the stipulation in the bills of lading under which plaintiffs' cotton was to be transported by the defendant giving to the carrier the benefit of plaintiffs' insurance is valid, then such stipulation only entitles the defendant to such insurance as it is in the hands of the plaintiffs, and if the policy is void or unproductive this is no defense, and the plaintiffs are entitled to recover in this action.

"*Fourth.* That if the stipulation in the bills of lading under which plaintiffs' cotton was to be transported by the defendant giving the carrier benefit of insurance effected by plaintiffs is valid, then no legal obligation arose therefrom that the plaintiffs should effect valid insurance, and if such insurance is invalid this is no defense to plaintiffs' action.

"*Fifth.* That as the plaintiffs, under the stipulation in the bills of lading giving the carrier benefit of the insurance, may or may not have insured as they please, the defendant takes such insurance, if effected, subject to all infirmities, and the same constitutes no defense to plaintiffs' action.

"*Sixth.* That the carrier does not lose his character as carrier by reason of a stipulation giving him the benefit of insurance by the shipper or owner, and that as carrier he is primarily liable for loss or damage, if not arising from causes exempted by law or his contract; and if the defendant desires the benefit of plaintiffs' insurance it must first pay the loss sustained by them.

"*Seventh.* That the defendants, under the [136] bills of lading in question, are not exempt from loss by fire, as such exemption, under said bills of lading, only applies to the carrier by water."

Mr. **Geo. A. Black,** for plaintiffs in error: The case at bar distinguished from *Phœnix Insurance Company* v. *Erie & Western Transportation Company*, 117 U. S. 312 (29: 873).

Where an owner insured, and damaged by perils insured against, abandons all "*spes recuperandi*" to the underwriter, the latter on paying the loss is entitled to be subrogated to all the rights of the insured to recover against third parties who caused the damage.

Home Ins. Co. v. *Western Transp. Co.* 4 Robt. 267; *Atlantic Ins. Co.* v. *Storrow*, 1 Edw. 621; *S. C.* 5 Paige, 285; *N. Y. Ins. Co.* v. *Roulet*, 24

Wend. 513; *Rogers* v. *Hosack*, 18 Wend. 319; *Ætna F. Ins. Co.* v. *Tyler*, 16 Wend. 385; *Hart* v. *Western R. Corp.* 13 Met. 99.

The entire destruction of the subject of insurance (*New York* v. *Pentz*, 24 Wend. 668), or the payment of the loss (*N. Y. Ins. Co.* v. *Roulet*, 24 Wend. 517), has been considered equipollent with an abandonment in giving the insurer such right of subrogation.

In the case of a common carrier, the owner of the goods transported by him may, by agreement, give him the benefit of an insurance on them effected by such owner.

Mercantile Mut. Ins. Co. v. *Calebs*, 20 N. Y. 173.

By the contract in question, the owner agrees that as between him and the carrier, the latter, when he has paid for the loss, may have the benefit of the insurance.

Rintoul v. *N. Y. Cent. & H. R. R. Co.* 17 Fed. Rep. 905.

The policies in question created and limited the liability of the insurance company.

Carstairs v. *Mechanics & T. Ins. Co.* 18 Fed. Rep. 478; *Excelsior F. Ins. Co.* v. *Royal Ins. Co.* 55 N. Y. 343; *Mercantile Mut. Ins. Co.* v. *Calebs*, 20 N. Y. 173; *Foster* v. *Van Reed*, 70 N. Y. 19.

The foundation of the rule of public policy, that the carrier shall not exempt himself by a contract with the owner of the goods from liability for his own negligence, is that such a contract tends to relax that diligence in the performance of his duties as a public carrier which the law exacts.

Bank of Ky. v. *Adams Exp. Co.* 93 U. S. 174 (23: 872); *N. Y. Cent. R. Co.* v. *Lockwood*, 84 U. S. 17 Wall. 357 (21: 627).

In those States and countries where the public policy which is the foundation of the restriction does not exist, the restriction itself does not exist.

Perkins v. *N. Y. Cent. R. Co.* 24 N. Y. 196; *Hollister* v. *Nowlen*, 19 Wend. 234; *Cole* v. *Goodwin*, 19 Wend. 251.

A carrier may, by express contract, restrict his common-law liability.

Kenrig v. *Eggleston*, Aleyn, 93; *Morse* v. *Slue*, 1 Vent. 190, 238; *Catley* v. *Wintringham*, Peake N. P. Cas. 150; *Gibbon* v. *Paynton*, 4 Burr. 2301; *Leeson* v. *Holt*, 1 Stark. 186; *Harris* v. *Packwood*, 3 Taunt. 271; *Wyld* v. *Pickford*, 8 Mees. & W. 443; *Southcote's Case*, 4 Coke, 84; *Dorr* v. *N. J. Steam Nav. Co.* 11 N. Y. 485.

In Massachusetts, a carrier may not contract to exempt himself from liability for his own negligence.

Medfield School Dist. v. *Boston, H. & E. R. Co.* 102 Mass. 556.

By the law of England, a contract of the carrier with the owner of the goods to limit his liability for the negligence of his servants being valid, an agreement to insure against such negligence would be equally valid.

Walker v. *Maitland*, 5 Barn. & Ald. 171; *Waters* v. *Monarch F. & L. Assur. Co.* 5 El. & Bl. 870; *London & N. W. R. Co.* v. *Glyn*, 1 El. & El. 652; *North British & M. Ins. Co.* v. *London L. & G. Ins. Co.* L. R. 5 Ch. Div. 569; *Crowley* v. *Cohen*, 3 Barn. & Ad. 478. See also *De Forest* v. *Fulton F. Ins. Co.* 1 Hall, 84, 110; *Savage* v. *Corn Exchange F. & I. Ins. Co.* 36 N. Y. 655; *Com.* v. *Shoe & L. D. F. & M. Ins. Co.* 112 Mass. 131; *Jackson Co.* v. *Boylston Mut. Ins. Co.* 139 Mass. 508.

If the carrier may insure on his own account he may contract with the person whose goods he carries, that such person shall insure for his benefit.

Mercantile Mut. Ins. Co. v. *Calebs*, 20 N. Y. 173.

The contrary is the doctrine of the United States Courts.

Phœnix Ins. Co. v. *Erie & W. Transp. Co.* 10 Biss. 18; *Rintoul* v. *N. Y. Cent. & H R. R. Co.* 21 Blatchf. 439; *The Hadji*, 20 Fed. Rep. 875.

A common carrier cannot insure against liability for his own negligence.

Home Ins. Co v. *Balt. Warehouse Co.* 93 U. S. 527 (23: 868); *Waters* v. *Monarch F. Co.* 5 El. & Bl. 870; *London & N. W. R. Co.* v. *Glyn*, 1 El. & El. 652; *De Forest* v. *Fulton F. Ins. Co.* 1 Hall, 136; *Siter* v. *Morrs*, 13 Pa. 219.

In a policy of insurance against the perils of the sea, and all other perils usually covered by such a policy, taken out by a common carrier, the risk of the carrier's negligence is excluded.

Savage v. *Corn Exchange F. & I. N. Ins. Co.* 4 Bosw. 3; *Richelieu etc. Nav. Co.* v. *Boston M. Ins. Co.* 26 Fed. Rep. 596; *Mount* v. *Waite*, 7 Johns. 434.

Messrs. **Wm. Allen Butler** and **Theodore G. Barker**, for defendant in error:

On contract for through transportation, exemptions inure to connecting carriers, although not so expressly provided.

Manhattan Oil Co. v. *Camden & A. R. & Transp. Co.* 54 N. Y. 197.

The acceptance of the carrier's receipt creates a contract, according to its terms, between him and the shipper.

Hutchinson, Carriers, 240.

The stipulations in the bills of lading, giving the defendant the benefit of insurance effected by the plaintiffs, are not unreasonable nor against public policy.

Phœnix Ins. Co. v. *Erie & W. Transp. Co.* 117 U. S. 312 (29: 873).

A charge founded on a hypothetical state of facts of which there is no evidence is erroneous.

U. S. v. *Breitling*, 61 U. S. 20 How. 252 (15: 900).

An instruction which assumes the existence of facts of which there is no evidence is misleading and erroneous.

Chicago, R. I. & P. R. Co. v. *Houston*, 95 U. S. 697 (24: 542); *Jones* v. *Randolph*, 104 U. S. 108 (26: 671).

Requests to charge, which overlook facts of which there is evidence, or assume as proved facts of which there is no evidence, properly refused.

Lucas v. *Brooks*, 85 U. S. 18 Wall. 436 (21: 779).

Mr. Chief Justice **Fuller** delivered the opinion of the court:

The defendant, a corporation of South Carolina, received the cotton in question for safe carriage from the point of connection with the Columbia and Greenville Railroad Company to Charleston, S. C., and delivery to the steamship company at that port. The loss occurred by [139] fire, in Charleston, before the obligation was

discharged; and this is an action as on the case, based on defendant's breach of duty, as a common carrier, in failing to safely carry and deliver.

To secure care, diligence and fidelity in the discharge of his important public functions, the common law charged the common carrier as an insurer, but the rigor of the rule has been relaxed so as to allow reasonable limitations upon responsibility at all events, to be imposed by contract. We have, however, uniformly held that this concession to changed conditions of business cannot be extended so far as to permit the carrier to exempt himself, by a contract with the owner of the goods, from liability for his own negligence. And as in case of loss the presumption is against the carrier, and no attempt was made here to rebut that presumption, the defendant's liability, because in fault, must be assumed upon the evidence before us.

The cause went to judgment, however, in favor of the defendant upon its second defense, which was sustained by the rulings of the circuit court brought under review upon this writ of error.

That defense set up the clause in the bills of lading providing that "The company incurring such liability shall have the benefit of any insurance which may have been effected upon or on account of said cotton;" and it was averred that the plaintiffs had fully insured the cotton against the risk of fire, but that defendant had not had the benefit of such insurance, nor had the plaintiffs given or offered to give to it such benefit.

If this bill of lading had contained a provision that the railroad company would not be liable unless the owners should insure for its benefit, such provision could not be sustained, for that would be to allow the carrier to decline the discharge of its duties and obligations as such, unless furnished with indemnity against the consequences of failure in such discharge. Refusal by the owners to enter into a contract so worded would furnish no defense to an action to compel the company to carry, and submission to such a requisition would be presumed to be the result of duress of circumstances, and not binding. [140] But the clause in question bears no such construction, and obviously cannot be relied on as in itself absolving the company from liability, for by its terms the benefit of insurance was only to be had when a legal liability had been incurred, and in favor of "the company incurring such liability." Since the right to the benefit of insurance at all depended upon the maintenance of plaintiffs' cause of action, the fact of not receiving such benefit could not be put forward in denial of the truth or validity of their complaint.

If, on the other hand, the contention of the defendant may be regarded as in the nature of a counterclaim by way of recoupment or set-off, then the question arises as to the extent of the stipulation, assuming it to be otherwise valid, and what would amount to a breach of it.

By its terms the plaintiffs were not compelled to insure for the benefit of the railroad company, but if they had insurance at the time of the loss, which they could make available to the carrier, or which, before bringing suit against the company, they had collected, without condition, then, if they had wrongfully refused to allow the carrier the benefit of the insurance, such a counterclaim might be sustained, but otherwise not.

The policies here were all taken out some weeks before the shipments were made, although, of course, they did not attach until then, and recovery upon neither of them could have been had, except upon condition of resort over against the carrier, any act of the owners to defeat which operated to cancel the liability of the insurers. They could not, therefore, be made available for the benefit of the carrier. Nor have the insurance companies paid the owners. It is true that after the loss had been incurred, the companies signed certain memoranda, by which the face of the insurance was reinstated, proofs of loss waived, and provision made for postponing the question of indemnity until the owners, if the carrier refused to pay, had used effort to collect, without prejudice to the owners' claims against the insurance companies. But this falls far short of the equivalent of payment, and, indeed, under the terms of these policies, payment itself would have been subject to such conditions as the companies chose to impose. Although in the order [141] of ultimate liability, that of the carrier is in legal effect primary and that of the insurer secondary, yet the insured can, in the absence of provisions otherwise controlling the subject, insist upon proceeding, under his contract, first, against the party secondarily liable, and when he does so is bound in conscience to give to the latter the benefit of the remedy against the party principal; but these insurers could, under their contracts, require the owners to pursue the carrier in the first instance and decline to indemnify them until the question and the measure of the latter's liability were determined. This they did, and to their action in that regard the defendant is not so situated as to be entitled to object.

In our judgment the second defense, in any aspect in which it may be considered upon this record, cannot be maintained, and it follows that the action of the circuit court was erroneous

The judgment will be reversed, and the cause remanded, with directions to the Circuit Court to award a new trial.

GEORGE W. FARNSWORTH, *Plff. in Err.*, [104]
v.
THE TERRITORY OF MONTANA.

(See S. C. Reporter's ed. 104-114.)

Criminal case from Territory—commercial traveler—obiter dictum—*jurisdiction—Act of March 3, 1885—writ of prohibition.*

1. Sections 708, 709, 1909 and 1911, of the Revised Statutes do not apply to or cover a criminal case from the Territory of Montana.

2. A proceeding by information, in the probate court in and for a county in the Territory of Montana, against a person for the crime of misdemeanor, in having, in violation of a statute, as a commercial traveler, offered for sale in that Territory merchandise to be delivered at a future time, without first having obtained a license, is a criminal case.

3. The language of the court in *Watts* v. *Wash-*

ington Territory, 91 U. S. 580 (23: 328), that this court could only review the final judgments of the supreme court of a Territory in criminal cases when the Constitution or a statute or treaty of the United States was brought in question, was *obiter dictum*.

4. No test of money value can be applied to the deprivation of liberty, whether as a punishment for crime or otherwise, in order to confer jurisdiction upon this court.

5. The second section of the Act of March 3, 1885, 23 Stat. at L. 443, does not apply to a criminal case.

6. A writ of prohibition is a civil remedy, given in a civil action.

[No. 93.]

Argued Nov. 23, 1888. Decided Jan. 14, 1889.

IN ERROR to the Supreme Court of the Territory of Montana, to review a judgment of the Supreme Court of that Territory, affirming a judgment of the District Court for the County of Gallatin, convicting the plaintiff in error of offering merchandise for sale without license, and imposing a fine upon him. *Dismissed.*

The facts are stated in the opinion.

Mr. **James Lowndes,** for plaintiff in error.

(No counsel appeared for defendant in error.)

Mr. Justice **Blatchford** delivered the opinion of the court:

This is a writ of error to the Supreme Court of the Territory of Montana, in a criminal case, brought by George W. Farnsworth, who was proceeded against by an information in the Probate Court in and for Gallatin County in that Territory, for the crime of misdemeanor, in having, in violation of a statute, as a commercial traveler, offered for sale in that Territory merchandise to be delivered at a future time, without first having obtained a license. He was [105] arrested, and pleaded not guilty; and was tried by the court, no jury having been asked for or demanded. The court found him guilty, and its judgment was that he pay a fine of $50, and costs of the prosecution, $17.70, and stand committed until such fine and costs should be paid. He took an appeal to the District Court for the County of Gallatin, and the case was tried by that court, a jury being expressly waived; and it found him guilty and sentenced him to pay a fine of $50 and all costs of prosecution. He then took an appeal to the supreme court of the Territory. That court affirmed the judgment of the district court in January, 1885. *Territory* v. *Farnsworth*, 5 Mont. 303, 324. To review that judgment the defendant has brought the case to this court by a writ of error.

It is very clear that this is a criminal case; and the question arises whether there is any authority for the review by this court of the decision of the Supreme Court of the Territory of Montana, in a criminal case. We have been furnished with a brief on this subject by the counsel for the plaintiff in error; but we are unable to find any statutory authority for the jurisdiction of this court in this case.

Section 702 of the Revised Statutes provides as follows: "The final judgments and decrees of the supreme court of any Territory except the Territory of Washington, in cases where the value of the matter in dispute, exclusive of costs, to be ascertained by the oath of either party, or of other competent witnesses, exceeds one thousand dollars, may be reviewed and reversed or affirmed in the supreme court, upon writ of error or appeal, in the same manner and under the same regulations as the final judgments and decrees of a circuit court. In the Territory of Washington, the value of the matter in dispute must exceed two thousand dollars, exclusive of costs. And any final judgment or decree of the supreme court of said Territory in any cause [when] the Constitution or a statute or treaty of the United States is brought in question may be reviewed in like manner." [110]

Section 1909 of the Revised Statutes provides that writs of error and appeals from the final decisions of the supreme court of any one of eight named Territories, of which Montana is one, "shall be allowed to the Supreme Court of the United States, in the same manner and under the same regulations as from the Circuit Courts of the United States, where the value of the property or the amount in controversy, to be ascertained by the oath of either party, or of other competent witnesses, exceeds one thousand dollars, except that a writ of error or appeal shall be allowed to the Supreme Court of the United States upon writs of *habeas corpus* involving the question of personal freedom."

Section 1911 of the Revised Statutes relates exclusively to writs of error and appeals from Washington Territory. Section 709 applies only to a writ of error to review a final judgment or decree in a suit in the highest court of a State.

In *Snow* v. *United States*, 118 U. S. 346 [30: 207], these sections, 702, 709, 1909 and 1911, were considered in reference to their application to a criminal case from the Territory of Utah, other than a capital case or a case of bigamy or polygamy, writs of error in which were provided for by § 8 of the Act of June 23, 1874 (18 Stat. at L. 253); and the reasons there given why they did not apply to or cover such a criminal case show that they do not apply to or cover a criminal case from the Territory of Montana.

Reference is made by the plaintiff in error to the case of *Watts* v. *Territory of Washington*, 91 U. S. 580 [23: 328], which was a criminal case from the Territory of Washington, in which it did not appear that the Constitution or any statute or treaty of the United States had been brought in question. The jurisdiction of this court in the case was questioned, as not being embraced by the last clause of section 702 of the Revised Statutes, before quoted. This court dismissed the case for want of jurisdiction, saying that it could only review the final judgments of the Supreme Court of the Territory of Washington in criminal cases, when the Constitution or a statute or treaty of the [111] United States was drawn in question. The decision in the case did not uphold the jurisdiction of this court in a criminal case where the Constitution or a statute or treaty of the United States was drawn in question, and the language of the court in that respect was *obiter dictum*.

It is sought, however, to uphold the jurisdiction in this case under the provisions of the Act of March 3, 1885 (23 Stat. at L. 443), which reads as follows: "No appeal or writ of error shall hereafter be allowed from any judgment or decree in any suit at law or in equity in the

Supreme Court of the District of Columbia, or in the supreme court of any of the Territories of the United States, unless the matter in dispute, exclusive of costs, shall exceed the sum of five thousand dollars.

"Sec. 2. That the preceding section shall not apply to any case wherein is involved the validity of any patent or copyright, or in which is drawn in question the validity of a treaty or statute of, or an authority exercised under, the United States; but in all such cases an appeal or writ of error may be brought without regard to the sum or value in dispute."

In *Snow* v. *United States*, 118 U. S. 351 [30: 208], it was held that the first section of that statute applied solely to judgments or decrees in suits at law or in equity measured by a pecuniary value. But it is contended in the present case, that the operation of such first section is not restricted to civil cases. It is, however, restricted to cases where the matter in dispute is measured by a pecuniary value; and it was said by this court, in *Kurtz* v. *Moffitt*, 115 U. S. 487, 498 [29: 458, 460], that "a jurisdiction, conferred by Congress upon any Court of the United States, of suits at law or in equity in which the matter in dispute exceeds the sum or value of a certain number of dollars, includes no case in which the right of neither party is capable of being valued in money." It was further said, in *Snow* v. *United States*, *supra*, 354 [30: 209]: "As to the deprivation of liberty, whether as a punishment for crime or otherwise, it is settled by a long course of decisions, cited and commented on in *Kurtz* v. *Moffitt*, *ubi supra*, that no test of money value can be applied to it, to confer jurisdiction."

[112] In the present case, the information was for the commission of a crime. The punishment inflicted by the probate court was a fine of $50 and $17.70 costs, and a judgment that the defendant stand committed until such fine and costs should be paid. The judgment of the district court was that the defendant pay a fine of $50 and all costs of prosecution. The supreme court affirmed, with costs, the judgment of the district court. The judgment of the probate court was imprisonment until the payment of the fine and the costs, and, if the fine covered by the judgment of any one of the courts could be called a "matter in dispute," within the first section of the Act of 1885, the pecuniary value involved did not exceed $5,000. So it is plain that the first section of the Act of 1885 does not cover the case.

It is claimed, however, that jurisdiction in the present case is derived from the second section of the Act of 1885, and that, under that section, jurisdiction exists in a criminal case from the supreme court of a Territory, wherein is drawn in question the validity of a treaty or statute of, or authority exercised under, the United States. The view urged is, that, in the present case, there is drawn in question the validity of an authority exercised under the United States, on the ground that the Statute of Montana, under which the conviction was had, is invalid, and that, as the Legislature of Montana, which enacted it, exists under the authority of the United States, the question of the validity of the statute raises the question of the validity of an authority exercised under the United States. But we do not find it necessary to consider this question, for we are of opinion that the second section of the Act of 1885 does not apply to any criminal case. That section contains an exception or limitation carved out of the first section. It declares that the first section "shall not apply to any case wherein is involved the validity of any patent or copyright, or in which is drawn in question the validity of a treaty or statute of, or an authority exercised under, the United States," and then enacts that, "in all such cases, an appeal or writ of error may be brought without regard to the sum or value in dispute." This clearly implies that the cases to which the second section is to apply are to be cases where there is a pecuniary matter in dispute, and [113] where that pecuniary matter is measurable by some sum or value, and where the case is also one of the kind mentioned in the second section.

There is another consideration strengthening these views. The Act of 1885 relates to appeals and writs of error from the judgments and decrees of the Supreme Court of the District of Columbia and those of the supreme court of any of the Territories of the United States. It was not independent legislation, but its main purpose was merely to increase to over $5,000 the jurisdictional amount, which by sections 702 and 1911 of the Revised Statutes, was required to be over $2,000 for the Territory of Washington; and, by sections 702 and 1909, over $1,000 for every other Territory; and, by section 705, as amended by § 4 of the Act of February 25, 1879 (20 Stat. at L. 321), over $2,500 for the District of Columbia. In all these prior statutes—sections 702, 705, 1909, 1911 and the Act of 1879—it was said that this court was to review the judgments and decrees "in the same manner and under the same regulations" provided as to the final judgments and decrees of a circuit court. These prior provisions are not repealed; and no jurisdiction ever existed in this court to review by writ of error or appeal the judgment of a circuit court in a criminal case.

In *Smith* v. *Whitney*, 116 U. S. 167 [29:601], cited for the plaintiff in error, the jurisdiction of this court was maintained, under the first section of the Act of 1885, of an appeal from, and a writ of error to, the Supreme Court of the District of Columbia, in a case where that court, by its judgment, had dismissed a petition for a writ of prohibition to a court-martial, convened to try an officer for an offense punishable by dismissal from the service and the deprivation of a salary which, during the term of his office, would exceed the sum of $5,000. A writ of prohibition is a civil remedy, given in a civil action, as much so as a writ of *habeas corpus*, which this court has held to be a civil and not a criminal proceeding, even when instituted to arrest a criminal prosecution. *Ex parte Tom Tong*, 108 U. S. 556 [27: 826].

It would have been easy for Congress to confer upon this court jurisdiction in criminal [114] cases from the Territories, by plain and explicit language; and for the reason that no such jurisdiction exists by statute in the present case, *the writ of error is dismissed.*

[58] JOHN A. WALLACE, *Appt.*,
v.
EDWARD JOHNSTONE ET AL.

(See S. C. Reporter's ed. 58-65.)

When a deed and contract constitute a mortgage —parol evidence.

1. A deed of lands, absolute in form with general warranty of title, and an agreement by the vendee to reconvey the property to the vendor or a third person, upon his payment of a fixed sum within a specified time, do not, of themselves, constitute a mortgage.
2. Such deed and agreement will not be held to operate as a mortgage, unless clearly shown, either by parol evidence or by the attendant circumstances, such as the condition and relation of the parties, or gross inadequacy of price, to have been intended by the parties as a security for a loan or an existing debt.

[No. 94.]
Argued Nov. 23, 1888. Decided Jan. 14, 1889.

APPEAL from a decree of the Circuit Court of the United States for the Southern District of Iowa, in a suit in equity to quiet the title to lands in favor of plaintiff. *Affirmed.*

The facts are stated in the opinion.

Mr. **George Norris,** for appellant:

A deed, absolute upon its face, but intended as a security for the payment of money is a mortgage, even at law, if accompanied by a separate contemporaneous agreement in writing to reconvey, upon the payment of the debt.

Teal v. *Walker*, 111 U. S. 242 (28:415); *Nugent* v. *Riley*, 1 Met. 117; *Wilson* v. *Shoenberger*, 31 Pa. 295; *Dow* v. *Chamberlin*, 5 McLean, 281; *Bayley* v. *Bailey*, 5 Gray, 505; *Lane* v. *Shears*, 1 Wend. 433; *Friedley* v. *Hamilton*, 17 Serg. & R. 70; *Shaw* v. *Erskine*, 43 Maine, 371.

A court of equity will treat a deed, absolute in form, as a mortgage, when executed as a security for a loan of money.

Peugh v. *Davis*, 96 U. S. 332 (24:775); *Russell* v. *Southard*, 53 U. S. 12 How. 189 (13:927); *Shillaber* v. *Robinson*, 97 U. S. 68 (24:967).

Great stress is justly laid upon the fact that the price bore no proportion to the value of the thing said to have been sold.

Russell v. *Southard*, 53 U. S. 12 How. 148 (13:927); *Conway* v. *Alexander*, 11 U. S. 7 Cranch, 341 (3:321); *Morris* v. *Nixon*, 42 U. S. 1 How. 126 (11:69); *Vernon* v. *Bethell*, 2 Eden, 110; *Oldham* v. *Halley*, 2 J. J. Marsh, 114; *Edrington* v. *Harper*, 3 J. J. Marsh, 354.

Messrs. **James Hagerman** and **Joseph G. Anderson,** for appellees:

Upon the face of the papers the deeds and contract of February 17, 1875, did not constitute a mortgage.

Conway v. *Alexander*, 11 U. S. 7 Cranch, 218, 237 (3:321).

The test of the distinction between a mortgage and a conditional sale is this: if the relation of debtor and creditor remains and a debt still subsists, it is a mortgage; but if the debt be extinguished by the agreement of the parties or the money advanced is not by way of a loan, and the grantor has the privilege of refunding, if he pleases, by a given time and thereby entitle himself to a reconveyance, it is a conditional sale.

4 Kent, Com. 5th ed. 144, note *e*; *Snavely* v. *Pickle*, 29 Gratt. 27, 34, 35; *Slutz* v. *Desenberg*, 28 Ohio St. 371, 376, 377; *Flagg* v. *Mann*, 14 Pick. 467, 478; *Glover* v. *Payn*, 19 Wend. 518, 520, 521; *Slowey* v. *McMurray*, 27 Mo. 113, 115, 116; *Galt* v. *Jackson*, 9 Ga. 151, 156; *Spence* v. *Steadman*, 49 Ga. 133, 141; *West* v. *Hendrix*, 28 Ala. 227, 234; *Ruffler* v. *Womack*, 30 Tex. 332, 341, 342; *Pitts* v. *Cable*, 44 Ill. 103; *Magnusson* v. *Johnson*, 73 Ill. 156; *Hicks* v. *Hicks*, 5 Gill & J. 75, 81, 83, 86; *McNamara* v. *Culver*, 22 Kan. 661; *Budd* v. *Van Orden*, 33 N. J. Eq. 143.

In order to constitute an absolute deed, with an agreement by the vendee to sell, such agreement must be made with the vendor and not with some other person.

Shaw v. *Erskine*, 43 Maine, 371, 373; *Treat* v. *Strickland*, 23 Maine, 234-241; *Hill* v. *Grant*, 46 N. Y. 496; *Pa. L. Ins. Co.* v. *Austin*, 42 Pa. 257, 266; *Payne* v. *Patterson*, 77 Pa. 134, 137; *Stephenson* v. *Thompson*, 13 Ill. 186, 191; *Carr* v. *Rising*, 62 Ill. 14, 19; *Magnusson* v. *Johnson*, 73 Ill. 156.

If the contract giving the option to Ford is what on its face it purports to be, namely, a mere option to Ford and his assigns to purchase within sixty days, then Ford and his assigns must exercise their option and make the purchase within the time limited. If they do not their right is gone.

Slowey v. *McMurray*, 27 Mo. 113, 117, 119; *Sexton* v. *Hitchcock*, 47 Barb. 220, 225; *Conway* v. *Alexander*, 11 U. S. 7 Cranch, 218 (3:321).

Parol evidence is admissible to show that the real transaction was a mortgage even against the face of the papers, but in such case the evidence must be clear, satisfactory, and convincing.

Howland v. *Blake*, 97 U. S. 624 (24:1027) *Coyle* v. *Davis*, 116 U. S. 108 (29:583); *Cadman* v. *Peter*, 118 U. S. 73 (30:78); *Corbit* v. *Smith*, 7 Iowa, 60-61; *Cooper* v. *Skeel*, 14 Iowa, 578, 579, 580; *Gardner* v. *Weston*, 18 Iowa, 533, 535; *Hyatt* v. *Cochran*, 37 Iowa, 309, 310; *Sinclair* v. *Walker*, 38 Iowa, 575, 577; *Zuver* v. *Lyons*, 40 Iowa, 510, 512; *Woodworth* v. *Carman*, 43 Iowa, 504, 505; *Kibby* v. *Harsh*, 61 Iowa, 196, 198, 199; *Knight* v. *McCord*, 63 Iowa, 429, 430; *Ensminger* v. *Ensminger*, 39 N. W. Rep. (Iowa) 208; 1 Jones, Mort. 2d ed. 260.

Mr. Justice **Lamar** delivered the opinion of [59] the court:

This is a suit in equity originally brought in a state court by the appellees against the appellant and one E. R. Ford, to quiet the title to about 3,184 acres of land in Sioux and Clay Counties in the State of Iowa.

The petition alleged that on February 17, 1875, the defendant, John A. Wallace, who was then the owner in fee of the land in dispute, by a deed of warranty, which was afterwards duly recorded, for a valuable consideration, sold and conveyed the same to the plaintiffs and one William Leighton; that on the same day said grantees executed and delivered to the defendant Ford a contract in writing, giving him the option, for the period of sixty days from that date, of purchasing the land in question, upon the payment by him of the sum of $5,876, which contract was on that day assigned by Ford to defendant Wallace, and was afterwards duly recorded; that Leighton afterwards conveyed his undivided one fourth in-

terest to the plaintiff C. F. Davis, who afterwards conveyed one half thereof to plaintiff Edward Johnstone; that neither of the defendants ever paid anything on the lands, and neither ever exercised the option of purchasing within the time specified in the option contract, or at any time thereafter, and that the rights of the defendants under that contract had become forfeited; that the plaintiffs, upon the purchase of the lands, assumed control of them, and had paid the taxes thereon; and that the defendants had no rights under the contract, nor any interest, legal or equitable, in the lands, but the contract, being upon the records of the counties where the lands lie, constituted a cloud upon the title to them.

[60]

The prayer of the petition was that the option contract be declared forfeited, rescinded and canceled, and the title to the plaintiffs be quieted against all claims of the defendants, or either of them, and for further relief, etc.

Defendant Wallace answered, admitting the execution and delivery of the deed and option contract of February 17, 1875, but alleging that, taken together, they were understood by the parties thereto as constituting a mortgage for the security of the money received by him at that time, which was in reality a loan; alleging, further, that the transaction was to avoid the effect of the usury laws of Iowa, the plaintiffs not being willing to accept simply the legal rate of 10 per cent interest on such loan; that the lands were worth at that time fully $20,000, and the money actually received by him was only about $4,250; that defendant Ford never had any real interest in the option contract, but actually assigned it to him before it was signed and executed by the plaintiffs and Leighton, all of which was well known to said parties; that the loan was obtained in good faith, and he was willing to bind himself, in the way he did, for said $5,876, for the use of the said $4,250 for sixty days, because he badly needed money, and believed he could sell the land so as to pay off the loan and leave a large surplus for himself; and that this defendant has considered himself indebted to plaintiffs and Leighton in the sum of $4,250, and lawful interest from February 17, 1875, and now asks that he be required to pay only that amount.

He, therefore, prayed that said deed be declared by the court to be a mortgage; that the title to the real estate be decreed to be in the defendant, subject to such claim as the plaintiffs may legitimately have against it by virtue of that deed, and any taxes they have paid; and that defendant have a legal right to redeem, as provided by law, upon such terms of payment of such amount as the court shall think just and proper, and for other and further relief, etc.

[61]

The suit was then removed into the United States Circuit Court for the Southern District of Iowa, upon the ground of diverse citizenship of the parties, where defendant Wallace filed a cross bill substantially in matter and form the same as his answer, asking to redeem. Plaintiffs replied to the answer of Wallace, and answered his cross bill, denying every material allegation therein not in harmony with the allegations of the petition. Defendant Ford answered, admitting all the allegations of the plaintiffs' petition, and disclaiming any interest in the lands. Testimony was taken, and the decree of the circuit court was in favor of the plaintiffs; the option contract was canceled and annulled; the title to the lands in question was quieted in the plaintiffs forever as against any claim thereto on the part of either of the defendants or any one claiming under them through the option contract; and the cross bill of defendant Wallace was dismissed. From this decree Wallace prayed and perfected an appeal, which brings the case into this court.

The sole question presented in the case is—was the transaction of February 17, 1875, an absolute sale or a mortgage? If this question could be determined by inspection of the written papers alone, the transaction was clearly not a mortgage, but an absolute sale and deed, accompanied by an independent contract between the vendee and a third person, not a party to the sale, to convey the lands to him upon his payment of a fixed sum within a certain time. Upon their face there are none of the *indicia* by which courts are led to construe such instruments to be intended as a mortgage or security for a loan; nothing from which there can be inferred the existence of a debt, or the relation of borrower and lender between the parties to the deeds or between the parties to the contract.

The question whether the extrinsic proof shows that the $4,250 was a loan to Wallace, and that the deed and option contract were made to secure its repayment with large interest, is a question of fact to be determined by the circumstances attending the execution of the instruments in question.

[62]

The evidence, as it appears in the record, is much less contradictory than is usual in such cases where it is sought by parol testimony to change an absolute conveyance, with a collateral agreement for a repurchase, into a mortgage.

With the single exception of the appellant, all the witnesses conversant with the negotiations between the parties unite in giving testimony tending to show that the transaction was a purchase of the lands by the appellees for the purpose of acquiring the property, and that they made a collateral agreement with Ford, that if he, or his assigns, should within sixty days deposit in bank to their credit the sum of $5,876, they would convey the lands to them.

It is not necessary to discuss the testimony in detail. There are two points, however, to which we will make reference. Edward Johnstone, one of the appellees, after giving the particulars of the contract, as expressed in the papers, says:

"Upon the purchase of these lands we went into possession of them, and we paid taxes for them, and sold a portion; and I never heard anything of any claim of Mr. Wallace of this being a loan, until I saw it set up in his answer to this case. . . . I never heard from Dr. Ford or Mr. Wallace that he wanted a loan; there was never such a thing as a loan intimated.

"Did you ever hear Mr. Leighton say anything on the subject?

"I talked frequently to Mr. Leighton and Mr. Davis and Mr. Connable, and I never heard a word said that would intimate that a loan was desired by Mr. Wallace; it was all with reference to the purchase of these lands."

Both Davis and Connable testify to the same effect. Each denies, positively, that a loan was proposed, or a debt incurred, or a mortgage at any time contemplated. These statements are strongly corroborated by the other witnesses, and are not contradicted even by the appellant.

[63] E. R. Ford, the agent of Wallace, who initiated negotiations between the parties, and who was present at the execution and delivery of the papers, the option contract being made with him, being called as a witness for the appellant, testified, "that the deed and option contract expressed the whole transaction." . . . "I didn't so understand it as a loan." In response to the question, "In your negotiation you did not understand it in that light, as a loan?" he answered: "I did not. From the beginning, in St. Louis I think it was, my own suggestion as to this option of repurchase, knowing that a mortgage or deed of trust would not be accepted for a short loan, as no loan was contemplated, the subject matter of a loan was left out of the question altogether." And he proceeds afterwards to state, in reference to his suggestion to Mr. Wallace that he should make a sale and take back the contract of repurchase within a stipulated time and for a stipulated price, that it was the only method he thought of, believing, as he did, "that a sale might be effected, but that a short loan could not be made upon unimproved lands; hence, I am quite positive that the subject of loans was not entertained at all." He also states: "That the question of interest was never discussed between the parties, and that whatever compensation the purchasers would consider in the matter would be in the nature of a profit of the land in selling."

W. B. Collins, who was the attorney for the appellees, states that the appellant, his agent, Ford, and Leighton, one of the purchasers, frequently met at his office and conversed about the pending negotiations for the sale of the land; that they always spoke of it as a sale and purchase, and that he did not hear at any time of its being a loan.

There is but one witness, the appellant Wallace, who testifies that the transaction was a loan. His statements as to any particular fact are singularly indefinite, inconsistent, and unsatisfactory His testimony consists, largely, of his version of certain conversations and arrangements with Leighton, who died before the commencement of the suit.

These arrangements looking to the loan and mortgage he expected, as he alleges, to be car-
[64] ried out by the appellees; but he admits, after many indirect answers, that he does not remember any conversations with the appellees, or any one of them, in which the transaction was spoken of by himself, or by them, as a loan, or in which the subject of interest was mentioned between them; or in his own language, "It is more than likely that I did not have such conversation." If there was no other testimony in the case than that of the appellant, we do not think the proof sufficient to overcome the effect due to the clear and distinct terms of the written instruments.

But it is urged by appellant's counsel that the disparity between the price paid for the lands and their actual value shows the transaction to be a loan, and not a purchase. The evidence on this subject is, at first view, contradictory; some of the witnesses putting a market value per acre of such lands in large lots at the price paid for them by the appellees; others stating their value to be from $2.50 to $3 per acre. The real fact, taking all the testimony together, seems to be that those lands, when sold in small areas to actual settlers for the purposes of habitation, would bring the higher prices, whilst in large quantities they could be sold to speculators, for profit, only at the lower prices.

Nothing presented by the assignment of errors calls for correction. The legal questions which they raise have been settled beyond doubt or controversy by repeated decisions of this court.

A deed of lands, absolute in form with general warranty of title, and an agreement by the vendee to reconvey the property to the vendor or a third person, upon his payment of a fixed sum within a specified time, do not of themselves constitute a mortgage; nor will they be held to operate as a mortgage, unless it is clearly shown, either by parol evidence or by the attendant circumstances, such as the condition and relation of the parties, or gross inadequacy of price, to have been intended by the parties as a security for a loan or an existing debt. *Cadman* v. *Peter*, 118 U. S. 73, 80 [30: 78, 81]; *Coyle* v. *Davis*, 116 U. S. 108 [29: 583]; *Howland* v. *Blake*, 97 U. S. 624 [24: 1027]; *Horbach* v. *Hill*, 112 U. S. 144 [29: 670].

The fact of such a collateral agreement to reconvey is not inconsistent with the idea of a sale.

When the time fixed for the payment elapsed [65]
Wallace's right to repurchase became extinct, and appellees held the lands discharged from any claim upon his part.

The decree of the Court below is affirmed.

SYLVESTER C. NOBLE, *Plff. in Err.*, [65]
v.
DE FOREST HAMMOND, Survivor of the Late Firm of HAMMOND & BURT.

(See S. C. Reporter's ed. 65-70.)

Fraud under the Bankrupt Act—when debt is not created by fraud—what constitutes fraud.

1. Where a produce dealer was requested by parties to collect money for them, as an accommodation, and without compensation, and to keep it until they called for it, and he proceeded to make such collection and, without actual fraud or fraudulent intent, deposited the proceeds to his own credit with his own funds, and, before he paid it over, was, by an unexpected revulsion, forced into bankruptcy, and made a composition with his creditors, the debt thus incurred by him is not within the exception, provided for in section 5117 R. S., that no debt created by fraud of the bankrupt, or by his defalcation while acting in any fiduciary character, shall be discharged by proceedings in bankruptcy.

2. Even if the agreement might be construed as creating a trust in some sense, it was not such a trust as comes within the provisions of the Bankrupt Act.

3. The subsequent mingling of the money collected with his own, by the plaintiff in error, does not constitute the actual positive fraud contemplated by that Act.

[101.]

Argued Dec. 3, 1888. Decided Jan. 14, 1889.

IN ERROR to the Supreme Court of the State of Vermont, to review a judgment in favor of plaintiffs in an action of assumpsit to recover money had and received in which defendant set up the defense of his discharge by composition in bankruptcy. *Reversed.*

Statement by *Mr. Justice* **Lamar**:

This is an action of general assumpsit originally brought in the County Court of Franklin County, Vermont, by the late firm of Hammond & Burt, of which the defendant in error, DeForest Hammond, is the survivor, against the plaintiff in error, Sylvester C. Noble, to recover the sum of $1,000 in money alleged to have been received by him of and from them. The defendant pleaded the general issue, and also gave notice under the statute, as a special defense, of his discharge by composition in bankruptcy, as provided for by the United States Statutes. The case was tried by a jury, resulting in a verdict in favor of plaintiffs for $1,149.83, for which, with costs, judgment [66] was rendered. The supreme court of the State affirmed this judgment, and the defendant thereupon sued out the writ of error which brings the case here.

The material facts in the case are as follows: in October, 1877, the Central Vermont Railroad Company, having its principal office in St. Albans, Vermont, where the plaintiff in error also resided, was indebted to the firm of Hammond & Burt, residents of Franklin, in that State, in about the sum of $3,600. It was the custom of that company to pay its debts of the character of this one in installments, and at its own convenience. Hammond & Burt, having experienced considerable difficulty in collecting prior debts from the company, requested the plaintiff in error, as a matter of accommodation to them, to collect said indebtedness for them, and he consented to do so. In pursuance of this arrangement they called at his office on the second of October, 1877, he at the time being out, and left for him an order of which the following is a copy:

"St. Albans, Vt., Oct. 2, 1877.

"Central Vermont Railroad will please pay to S. C. Noble or order the whole amount due to us.

"Hammond & Burt."

Immediately after they had left his office the plaintiff in error came in, and, the order being handed to him, he stepped to the door of the office, called to them as they were crossing the street on their way to the depot, and asked them what he should do with the money when collected. They testified that they then told him "to keep the money until they called for it." He testified that they told him "to keep and use the money until they called for it," or words to that effect.

On this order the plaintiff in error collected $1,000 from the railroad company—$500 on October 3d and $500 on October 12, 1877—and deposited these sums as collected in bank, to his own credit, as he deposited his own funds. On the 26th of the same month he failed, and on the 6th of November, 1877, on the petition of his creditors, was adjudged a bankrupt. Subsequently, an offer of composition to his creditors was duly accepted and confirmed by a majority of them, but was not accepted by these plaintiffs.

It appears from the bill of exceptions that [67] "There was no evidence tending to show any actual fraud or any fraudulent intent in the defendant's mingling the money with his own and using it." The jury returned a verdict for the defendants in error, under instructions from the court, which authorized such a verdict, only if the instructions given by the defendant in error to the plaintiff in error were to keep the money until they demanded it.

Messrs. A. P. Cross, E. Curtis Smith and **Guy C. Noble**, for plaintiff in error:

The Supreme Court of Vermont erred in affirming the judgment of the county court in favor of the defendants in error on the record.

Chapman v. *Forsyth*, 43 U. S. 2 How. 202 (11: 236); *Neal* v. *Clark*, 95 U. S. 704 (24: 586); *Hennequin* v. *Clews*, 77 N. Y. 427; 111 U. S. 676 (28: 565); *Johnson* v. *Worden*, 47 Vt. 457; *Darling* v. *Woodward*, 54 Vt. 101; *Woolsey* v. *Cade*, 54 Ala. 378; *McAdoo* v. *Lummis*, 43 Tex. 227; *Green* v. *Chilton*, 57 Miss. 599; *DuPont* v. *Beck*, 81 Ind. 271; *Grannis* v. *Cubbedge*, 71 Ga. 582; *Upshur* v. *Briscoe*, 37 La. Ann. 138; *Scott* v. *Porter*, 93 Pa. 38; *Phillips* v. *Russell*, 42 Maine, 360; *Gibson* v. *Gorman*, 44 N. J. L. 325; *Chipley* v. *Frierson*, 18 Fla. 639; *Pierce* v. *Shippee*, 90 Ill. 371; *Palmer* v. *Hussey*, 59 N. Y. 647; 87 N. Y. 303; *Stratford* v. *Jones*, 97 N. Y. 586; *Hays* v. *Nash*, 129 Mass. 62; *Grover* v. *Clinton*, 8 Nat. Bank. Reg. 312; *Owsley* v. *Cobin*, 15 Nat. Bank. Reg. 489; *Wells* v. *Lamprey*, 16 Nat. Bank. Reg. 205; *Re Shafer*, 17 Nat. Bank. Reg. 116; *Keims* v. *Graff*, Id. 319; *Re Rodger*, 18 Nat. Bank. Reg. 382; *Re Smith*, Id. 24.

The Supreme Court of Vermont erred in holding that the debt shown by the record was created by fraud within the meaning of section 5117 R. S.

Spooner v. *Mattoon*, 40 Vt. 300.

Mr. **Henry R. Start**, for defendant in error:

The conversion of Hammond & Burt's money created a debt that comes within the exception provided for in section 5117 R. S. The using of the money received from the railroad company by the plaintiff in error was embezzling Hammond & Burt's money.

People v. *Hennessey*, 15 Wend. 147; *Com.* v. *Foster*, 107 Mass. 221; *Strang* v. *Bradner*, 114 U. S. 555 (29: 248).

The exclusion of the testimony, offered to show that one Mitchell failed and its effect upon the business of the plaintiff in error, presents no federal question.

Mackay v. *Dillon*, 45 U. S. 4 How. 421 (11: 1038).

The motion of the plaintiff in error for a verdict was properly overruled, and there was no error in the charge.

Scott v. *Olmstead*, 52 Vt. 211; *Johnson* v. *Worden*, 47 Vt. 457; *Darling* v. *Woodward*, 54 Vt. 101.

Mr. Justice **Lamar** delivered the opinion of the court:

The case presented upon the record, as found by the jury, is that of a produce dealer who, having been requested by parties to collect money for them as an accommodation, and without compensation, and to keep it until they

called for it, proceeded to make such collection and, without actual fraud or fraudulent intent, deposited the proceeds to his own credit with his own funds; and who before he paid it over [68] was, by an unexpected revulsion, forced into bankruptcy, and made a composition with his creditors. The question involved is whether the debt thus incurred was within the exception provided for in § 5117 R. S., which is as follows:

"No debt created by the fraud or embezzlement of the bankrupt, or by his defalcation as a public officer, or while acting in any fiduciary character, shall be discharged by proceedings in bankruptcy."

The judge on the trial charged the jury that the money under such circumstances was received in a fiduciary character, and that the plaintiffs must recover. The Supreme Court of Vermont affirmed the judgment of that court, on the ground that though the above charge was technically erroneous, it was harmless, because the act of the defendant, in mingling the money with his own and using it, was, in the face of the plaintiff's instructions to keep it until they called for it, a wrongful and fraudulent act, a betrayal by the defendant of the trust reposed in him, and, therefore, a fraud which created a debt that was not discharged by the defendant's composition with his creditors under the provisions of the Bankrupt Law.

The effect to be given to the phrases "while acting in a fiduciary character" and "created by the fraud of the bankrupt," has been considered and fully settled by this court in the following cases: *Chapman* v. *Forsyth*, 43 U. S. 2 How. 202 [11:236]; *Neal* v. *Clark*, 95 U. S. 704 [24:586]; *Wolf* v. *Stix*, 99 U. S. 1 [25: 309]; *Hennequin* v. *Clews*, 111 U. S. 676 [28: 565]; *Strang* v. *Bradner*, 114 U. S. 555 [29:248]; and *Palmer* v. *Hussey*, 119 U. S. 96 [30: 362]. The class of debts held by the decisions in those cases to be excepted from the operation of bankrupt proceedings has been stated and illustrated with a clearness and fullness which leaves but little opening for any controversy with regard to the application of the clause under consideration to particular cases.

Under the Bankrupt Act of 1841, which excepted from discharge debts of the bankrupt created in consequence of a defalcation as a public officer, or as executor, administrator, [69] guardian, or trustee, or while acting in any other fiduciary capacity, this court, in *Chapman* v. *Forsyth*, held that the cases enumerated in the Act are cases not of implied but special trusts; that the phrase, "in any other fiduciary capacity," referred, not to those trusts which the law implies from the contract, and which form an element in every agency, and in nearly all the commercial transactions in the country, but to technical trusts; and hence that a factor who had sold the property of his principal, and had failed to pay over to him the proceeds, did not owe to him a debt created in a fiduciary capacity within the meaning of the Act.

That decision is stated by *Mr. Justice* Bradley, in the opinion in *Hennequin* v. *Clews*, to have been "not only followed but approved by the highest courts of several of the States."

Under section 5117, which is substantially a re-enactment of the provision of the Act of 1841, in this regard, with the single additional provision that "No debt created by fraud shall be discharged," etc., this court, on the line of the same reasoning, has construed the word "fraud," as used in that section, to mean positive fraud, or fraud in fact—involving moral turpitude or intentional wrong, as does embezzlement, and not implied fraud or fraud in law; and hence it does not apply to a debt created by purchasing in good faith, from an executor, bonds belonging to his decedent's estate at a discount, although such an act was held to be a constructive fraud. *Neal* v. *Clark*, *supra*. Nor does it include such fraud as the law implies from the purchase of property from a debtor with intent thereby to hinder and delay creditors in the collection of their debts. *Wolf* v. *Stix*, *supra*. Nor does it refer to a debt arising from the conversion by a party to his own use of bonds held by him merely as a collateral security for the payment of a debt, or the performance of a duty, and which he fails to restore after the payment of the debt or the performance of the duty to the person who intrusted them to his keeping. *Hennequin* v. *Clews*, *supra*. In all these cases the defendant was held to be released by the subsequent discharge in bankruptcy.

The decisions of the state courts in a great number and variety of cases, as shown by the [70] citations in the brief of counsel for plaintiff in error, are in accord with the construction, by this court, of these clauses of the section in question, and have applied it to cases of agents, factors, commission merchants, and bailees, who have failed to account for proceeds of the sale of property committed to them for that purpose or moneys received upon collections intrusted to them.

The finding of the jury, that the agreement of the plaintiff in error was to collect the money and keep it until the defendants in error called for it, cannot be taken to imply an obligation to keep and deliver to them the identical bills or coins. Even if the agreement between the parties might be construed as creating a trust in some sense, it was clearly not such a trust as comes within the provisions of the Bankrupt Act. Nor can the subsequent mingling, by the plaintiff in error, of the money collected, with his own, constitute the *actual, positive* fraud contemplated by that Act, but only such an *implied* fraud as is involved in most, or all, cases of conversion of property or of breach of contract.

The judgment of the Supreme Court of Vermont is in conflict with the principles laid down by the decisions of this Court, as well as the general drift of those of the several State Courts, and *is, therefore, reversed;* and the case is remanded to the Court below, with an instruction to grant a new trial and to take such further proceedings as may not be inconsistent with this opinion.

FRANK M. DENT, *Plff. in Err.*, [114

v.

THE STATE OF WEST VIRGINIA.

(See S. C. Reporter's ed. 114-128.)

State statute requiring physicians to procure certificate—not unconstitutional.

1. A statute of a State, which requires every practitioner of medicine in it to obtain a certificate from the state board of health that he is a graduate of a reputable medical college, and which makes the practice of medicine by any person without such certificate a misdemeanor, punishable by fine or imprisonment, is not unconstitutional and void under the Fourteenth Amendment, which declares that no State shall deprive any person of life, liberty or property without due process of law.

2. Legislation is not open to the charge of depriving one of his rights without due process of law, if it be general in its operation upon the subjects to which it relates, and is enforceable by usual modes adapted to the nature of the case.

[No. 119.]

Submitted Dec. 11, 1888. Decided Jan. 14, 1889.

IN ERROR to the Supreme Court of Appeals of the State of West Virginia, to review a judgment of that Court affirming a conviction upon an indictment in the State Circuit Court for unlawfully engaging in the practice of medicine without a certificate or license as required by the statute of that State, chap. 98, passed March 15, 1882. *Affirmed.*

Statement by *Mr. Justice* **Field:**

This case comes from the Supreme Court of Appeals of West Virginia. It involves the validity of the statute of that State which requires every practitioner of medicine in it to obtain a certificate from the state board of health that he is a graduate of a reputable medical college in the school of medicine to which he belongs; or that he has practiced medicine in the State continuously for the period of ten years prior to the 8th day of March, 1881; or that he has been found upon examination by the board to be qualified to practice medicine in all its departments; and makes the practice of, or the attempt by any person to practice, medicine, surgery or obstetrics in the State without such certificate, unless called from another State to treat a particular case, a misdemeanor punishable by fine or imprisonment, or both, in the discretion of the court. The statute in question is found in sections 9 and 15 of an Act of the State, chapter 98, passed March 15, 1882, amending a chapter of its Code concerning the public health. Statutes of 1882, 245, 246, 248. These sections are as follows:

[115]

"Sec. 9. The following persons, and no others, shall hereafter be permitted to practice medicine in this State, viz.:

First. All persons who are graduates of a reputable medical college in the school of medicine to which the person desiring to practice belongs. Every such person shall, if he has not already done so and obtained the certificate hereinafter mentioned, present his diploma to the State Board of Health, or to the two members thereof in his Congressional district, and if the same is found to be genuine, and was issued by such medical college, as is hereinafter mentioned, and the person presenting the same be the graduate named therein, the said board, or said two members thereof (as the case may be), shall issue and deliver to him a certificate to that effect, and such diploma and certificate shall entitle the person named in such diploma to practice medicine in all its departments in this State.

[116] *Second.* All persons who have practiced medicine in this State continuously for the period of ten years prior to the eighth day of March, one thousand eight hundred and eighty-one. Every such person shall make and file with the two members of the State Board of Health in the Congressional District in which he resides, or if he resides out of the State in the district nearest his residence, an affidavit of the number of years he has continuously practiced in this State; and if the number of years therein stated be ten or more, the said board or said two members thereof, shall, unless they ascertain such affidavit to be false, give him a certificate to that fact, and authorizing him to practice medicine in all its departments in this State.

Third. A person who is not such graduate and who has not so practiced in this State for a period of ten years, desiring to practice medicine in this State, shall, if he has not already done so, present himself for examination before the State Board of Health or before the said two members thereof in the Congressional District in which he resides, or, if he resides out of the State, to the said two members of the State Board of Health in the Congressional District nearest his place of residence, who, together with a member of the local board of health, who is a physician (if there be such member of the local board) of the county in which the examination is held, shall examine him as herein provided; and if, upon full examination they find him qualified to practice medicine in all its departments, they, or a majority of them, shall grant him a certificate to that effect, and thereafter he shall have the right to practice medicine in this State to the same extent as if he had the diploma and certificate hereinbefore mentioned. The members of the State Board of Health in each Congressional district shall, by publication in some newspaper printed in the county in which their meeting is to be held, or, if no such paper is printed therein, in some newspaper of general circulation in such district, give at least twenty-one days' notice of the time and place at which they will meet for the examination of applicants for permission to practice medicine, which notice shall be published at least once in each week for three successive weeks before the day of such meeting; but this section shall not apply to a physician or surgeon who is called from another State to treat a particular case or to perform a particular surgical operation in this State, and who does not otherwise practice in this State." [117]

"Sec. 15. If any person shall practice, or attempt to practice, medicine, surgery or obstetrics in this State, without having complied with the provisions of section 9 of this chapter, except as therein provided, he shall be guilty of a misdemeanor, and fined for every such offense not less than fifty nor more than five hundred dollars, or imprisoned in the county jail not less than one month nor more than twelve months, or be punished by both such fine and imprisonment, at the discretion of the court. And if any person shall file, or attempt to file, as his own, the diploma or certificate of another, or shall file, or attempt to file, a false or forged affidavit of his identity, or shall willfully swear falsely to any question which may be propounded to him on his examination, as herein provided for, or to any affidavit herein required to be made or filed by him, he shall, upon conviction thereof, be confined in the

penitentiary not less than one nor more than three years, or imprisoned in the county jail not less than six nor more than twelve months, and fined not less than one hundred nor more than five hundred dollars, at the discretion of the court."

Under this statute the plaintiff in error was indicted in the State Circuit Court of Preston County, West Virginia, for unlawfully engaging in the practice of medicine in that State in June, 1882, without a diploma, certificate, or license therefor as there required, not being a physician or surgeon called from another State to treat a particular case or to perform a particular surgical operation. To this indictment the defendant pleaded not guilty; and a jury having been called, the State by its prosecuting attorney and the defendant by his attorney, agreed upon the following statement of facts, namely:

"That the defendant was engaged in the practice of medicine in the Town of Newburg, Preston County, West Virginia, at the time charged in the indictment, and had been so engaged since the year 1876 continuously to the present time, and has during all said time en-
[118] joyed a lucrative practice, publicly professing to be a physician, prescribing for the sick, and appending to his name the letters M. D.; that he was not then and there a physician and surgeon called from another State to treat a particular case or to perform a particular surgical operation, nor was he then and there a commissioned officer of the United States Army and Navy and hospital service; that he has no certificate, as required by section 9, chapter 98, Acts of the Legislature of West Virginia, passed March 15, 1882, but has a diploma from the 'American Medical Eclectic College of Cincinnati, Ohio;' that he presented said diploma to the members of the board of health, who reside in his Congressional District, and asked for the certificate as required by law, but they, after retaining said diploma for some time, returned it to defendant with their refusal to grant him a certificate asked, because, as they claimed, said college did not come under the word reputable as defined by said board of health; that if the defendant had been or should be prevented from practicing medicine it would be a great injury to him, as it would deprive him of his only means of supporting himself and family; that at the time of the passage of the Act of 1882 he had not been practicing medicine ten years, but had only been practicing six, as aforesaid, from the year 1876."

These were all the facts in the case. Upon them the jury found the defendant guilty; and thereupon he moved an arrest of judgment, on the ground that the Act of the Legislature was unconstitutional and void so far as it interfered with his vested right in relation to the practice of medicine, which motion was overruled, and to the ruling an exception was taken. The court thereupon sentenced the defendant to pay a fine of fifty dollars and the costs of the proceedings. The case being taken on writ of error to the supreme court of appeals of the State the judgment was affirmed; and to review this judgment the case is brought here.

Mr. **M. H. Dent**, for plaintiff in error.

Mr. **Alfred Caldwell**, for defendant in error:

The police power of the State extends to the protection of the lives, limbs, health, comfort and quiet of all persons, and the protection of all property within the State.

Thorpe v. *Rutland & B. R. Co.* 27 Vt. 149; *N. Y. City* v. *Miln*, 36 U. S. 11 Pet. 102 (9: 648); *State* v. *Noyes*, 47 Maine, 189; *Barbier* v. *Connolly*, 113 U. S. 31 (28: 924); *Hedderich* v. *State*, 101 Ind. 564; Cooley, Const. Lim. 5th ed. 197; *Dogge* v. *State*, 17 Neb. 140; *State* v. *Gregory*, 33 Mo. 123; *State* v. *State Medical Examining Board*, 32 Minn. 324.

The following cases are decisive of the constitutionality of the West Virginia Act:

Mugler v. *Kan.* 123 U. S. 623 (31: 205); *Barbier* v. *Connolly*, 113 U. S. 27 (28: 923); *Soon Hing* v. *Crowley*, 113 U. S. 703 (28: 1145); *Morgan's Steamship Co.* v. *La. Board of Health*, 118 U. S. 455 (30: 237); *Boston Beer Co.* v. *Mass.* 97 U. S. 25 (24: 989); *Patterson* v. *Ky.* 97 U. S. 501 (24: 1115); *Slaughter House Cases*, 83 U. S. 16 Wall. 36 (21: 394); *Bartemeyer* v. *Iowa*, 85 U. S. 18 Wall. 129 (21: 929); *Bradwell* v. *Ill.* 83 U. S. 16 Wall. 130 (21: 442).

The State Legislatures cannot by contract devest themselves of the power to make police regulations.

Boston Beer Co. v. *Mass.* 97 U. S. 25 (24: 989); *Butchers' Union etc. Co.* v. *Crescent City Live Stock etc. Co.* 111 U. S. 751 (28: 587).

Mr. Justice **Field** delivered the opinion of [121
the court:

Whether the indictment upon which the plaintiff in error was tried and found guilty is open to objection for want of sufficient certainty in its averments, is a question which does not appear to have been raised either on the trial or before the supreme court of the State. The presiding justice of the latter court in its opinion states that the counsel for the defendant expressly waived all objections to defects in form or substance of the indictment, and based his claim for a review of the judgment on the ground that the Statute of West Virginia is unconstitutional and void. The unconstitutionality asserted consists in its alleged conflict with the clause of the Fourteenth Amendment, which declares that no State shall deprive any person of life, liberty or property without due process of law—the denial to the defendant of the right to practice his profession without the certificate required constituting the deprivation of his vested right and estate in his profession, which he had previously acquired.

It is undoubtedly the right of every citizen of the United States to follow any lawful calling, business or profession he may choose, subject only to such restrictions as are imposed upon all persons of like age, sex and condition. This right may in many respects be considered as a distinguishing feature of our republican institutions. Here all vocations are open to everyone on like conditions. All may be pursued as sources of livelihood, some requiring years of study and great learning for their successful prosecution. The interest, or, as it is sometimes termed, the estate acquired in them, that is, the right to continue their prosecution, is often of great value to the possessors, and

cannot be arbitrarily taken from them, any more than their real or personal property can [122] be thus taken. But there is no arbitrary deprivation of such right where its exercise is not permitted because of a failure to comply with conditions imposed by the State for the protection of society. The power of the State to provide for the general welfare of its people authorizes it to prescribe all such regulations as in its judgment will secure or tend to secure them against the consequences of ignorance and incapacity as well as of deception and fraud. As one means to this end it has been the practice of different States, from time immemorial, to exact in many pursuits a certain degree of skill and learning upon which the community may confidently rely, their possession being generally ascertained upon an examination of parties by competent persons, or inferred from a certificate to them in the form of a diploma or license from an institution established for instruction on the subjects, scientific and otherwise, with which such pursuits have to deal. The nature and extent of the qualifications required must depend primarily upon the judgment of the State as to their necessity. If they are appropriate to the calling or profession, and attainable by reasonable study or application, no objection to their validity can be raised because of their stringency or difficulty. It is only when they have no relation to such calling or profession, or are unattainable by such reasonable study and application, that they can operate to deprive one of his right to pursue a lawful vocation.

Few professions require more careful preparation by one who seeks to enter it than that of medicine. It has to deal with all those subtle and mysterious influences upon which health and life depend, and requires not only a knowledge of the properties of vegetable and mineral substances but of the human body in all its complicated parts, and their relation to each other, as well as their influence upon the mind. The physician must be able to detect readily the presence of disease, and prescribe appropriate remedies for its removal. Everyone may have occasion to consult him, but comparatively few can judge of the qualifications of learn- [123] ing and skill which he possesses. Reliance must be placed upon the assurance given by his license, issued by an authority competent to judge in that respect, that he possesses the requisite qualifications. Due consideration, therefore, for the protection of society may well induce the State to exclude from practice those who have not such a license, or who are found upon examination not to be fully qualified. The same reasons which control in imposing conditions, upon compliance with which the physician is allowed to practice in the first instance, may call for further conditions as new modes of treating disease are discovered, or a more thorough acquaintance is obtained of the remedial properties of vegetable and mineral substances, or a more accurate knowledge is acquired of the human system and of the agencies by which it is affected. It would not be deemed a matter for serious discussion that a knowledge of the new acquisitions of the profession, as it from time to time advances in its attainments for the relief of the sick and suffering, should be required for continuance in its practice, but for the earnestness with which the plaintiff in error insists that by being compelled to obtain the certificate required, and prevented from continuing in his practice without it, he is deprived of his right and estate in his profession without due process of law. We perceive nothing in the statute which indicates an intention of the Legislature to deprive one of any of his rights. No one has a right to practice medicine without having the necessary qualifications of learning and skill; and the statute only requires that whoever assumes, by offering to the community his services as a physician, that he possesses such learning and skill, shall present evidence of it by a certificate or license from a body designated by the State as competent to judge of his qualifications.

As we have said on more than one occasion, it may be difficult, if not impossible, to give to the terms "due process of law" a definition which will embrace every permissible exertion of power affecting private rights and exclude such as are forbidden. They come to us from the law of England, from which country our jurisprudence is to a great extent derived, and their requirement was there designed to secure the subject against the arbitrary action of the Crown and place him under the protection of the law. They were deemed to be equivalent to "the law of the land." In this country, the requirement is intended to have a similar effect [124] against legislative power, that is, to secure the citizen against any arbitrary deprivation of his rights, whether relating to his life, his liberty, or his property. Legislation must necessarily vary with the different objects upon which it is designed to operate. It is sufficient, for the purposes of this case, to say that legislation is not open to the charge of depriving one of his rights without due process of law, if it be general in its operation upon the subjects to which it relates, and is enforceable in the usual modes established in the administration of government with respect to kindred matters, that is, by process or proceedings adapted to the nature of the case. The great purpose of the requirement is to exclude everything that is arbitrary and capricious in legislation affecting the rights of the citizen. As said by this court in *Yick Wo* v. *Hopkins*, speaking by *Mr. Justice* Matthews: "When we consider the nature and the theory of our institutions of government, the principles upon which they are supposed to rest, and review the history of their development, we are constrained to conclude that they do not mean to leave room for the play and action of purely personal and arbitrary power." 118 U. S. 356, 369 [30: 220, 226]. See also *Pennoyer* v. *Neff*, 95 U. S. 714, 733 [24:565, 572]; *Davidson* v. *N. O.* 96 U. S. 97, 104, 107 [24: 616, 619, 620]; *Hurtado* v. *Cal.* 110 U. S. 516 [28: 232]; *Mo. Pac. R. Co.* v. *Humes*, 115 U. S. 512, 519 [29: 463, 465].

There is nothing of an arbitrary character in the provisions of the statute in question; it applies to all physicians, except those who may be called for a special case from another State; it imposes no conditions which cannot be readily met; and it is made enforceable in the mode usual in kindred matters, that is, by regular proceedings adapted to the case. It authorizes an examination of the applicant by the

board of health as to his qualifications when he has no evidence of them in the diploma of a reputable medical college in the school of medicine to which he belongs, or has not practiced in the State a designated period before [125] March, 1881. If, in the proceedings under the statute, there should be any unfair or unjust action on the part of the board in refusing him a certificate, we doubt not that a remedy would be found in the courts of the State. But no such imputation can be made, for the plaintiff in error did not submit himself to the examination of the board after it had decided that the diploma he presented was insufficient.

The cases of *Cummings* v. *Missouri*, 71 U. S. 4 Wall. 277 [18: 356], and of *Ex parte Garland*, 71 U. S. 4 Wall. 333 [18: 366] upon which much reliance is placed, do not, in our judgment, support the contention of the plaintiff in error. In the first of these cases it appeared that the Constitution of Missouri, adopted in 1865, prescribed an oath to be taken by persons holding certain offices and trusts and following certain pursuits within its limits. They were required to deny that they had done certain things, or had manifested by act or word certain desires or sympathies. The oath which they were to take embraced thirty distinct affirmations respecting their past conduct, extending even to their words, desires and sympathies. Every person unable to take this oath was declared incapable of holding in the State "any office of honor, trust or profit under its authority, or of being an officer, councilman, director, trustee, or other manager of any corporation, public or private," then existing or thereafter established by its authority; or "of acting as a professor or teacher in any educational institution, or in any common or other school, or of holding any real estate or other property in trust for the use of any church, religious society, or congregation." And every person holding, at the time the Constitution took effect, any of the offices, trusts or positions mentioned was required, within sixty days thereafter, to take the oath, and if he failed to comply with this requirement it was declared that his office, trust, or position should, *ipso facto*, become vacant.

No person after the expiration of the sixty days was allowed, without taking the oath, "to practice as an attorney or counsellor at law," nor after that period could "any person be competent as a bishop, priest, deacon, minister, elder, or other clergyman of any religious persuasion, sect or denomination to teach or preach, [126] or solemnize marriages." Fine and imprisonment were prescribed as a punishment for holding or exercising any of the "offices, positions, trusts, professions, or functions" specified without taking the oath, and false swearing or affirmation in taking it was declared to be perjury punishable by imprisonment in the penitentiary.

A priest of the Roman Catholic Church was indicted in a Circuit Court of Missouri, and convicted of the crime of teaching and preaching as a priest and minister of that religious denomination, without having first taken the oath, and was sentenced to pay a fine of $500, and to be committed to jail until the same was paid. On appeal to the supreme court of the State the judgment was affirmed, and the case was brought on error to this court.

As many of the acts from which the parties were obliged to purge themselves by the oath had no relation to their fitness for the pursuits and professions designated, the court held that the oath was not required as a means of ascertaining whether the parties were qualified for those pursuits and professions, but was exacted because it was thought that the acts deserved punishment, and that for many of them there was no way of inflicting punishment except by depriving the parties of their offices and trusts. A large portion of the people of Missouri were unable to take the oath, and as to them the court held that the requirement of its Constitution amounted to a legislative deprivation of their rights. Many of the acts which parties were bound to deny that they had ever done were innocent at the time they were committed, and the deprivation of a right to continue in their offices if the oath were not taken was held to be a penalty for a past act, which was violative of the Constitution. The doctrine of this case was affirmed in *Pierce* v. *Carskadon*, 83 U. S. 16 Wall. 234 [21: 276].

In the second case mentioned, that of *Ex parte Garland*, it appeared that on the second of July, 1862, Congress had passed an Act prescribing an oath to be taken by every person elected or appointed to any office of honor or profit under the United States, either in the civil, military, or naval departments of the government, except the President, before entering upon the duties of his office, and before being entitled to his salary or other emoluments. On the 24th [127] of January, 1865, Congress, by a supplemental Act, extended its provisions so as to embrace attorneys and counselors of the Courts of the United States. This latter Act, among other things, provided that after its passage no person should be admitted as an attorney and counselor to the bar of the Supreme Court, and, after the 4th of March, 1865, to the bar of any Circuit or District Court of the United States, or of the Court of Claims, or be allowed to appear and be heard by virtue of any previous admission, until he had taken and subscribed the oath prescribed by the Act of July 2, 1862. The oath related to past acts, and its object was to exclude from practice in the courts parties who were unable to affirm that they had not done the acts specified; and, as it could not be taken by large classes of persons, it was held to operate against them as a legislative decree of perpetual exclusion.

Mr. Garland had been admitted to the bar of the Supreme Court of the United States previous to the passage of the Act. He was a citizen of Arkansas, and when that State passed an ordinance of secession which purported to withdraw her from the Union, and by another ordinance attached herself to the so called Confederate States, he followed the State and was one of her Representatives first in the lower House and afterwards in the Senate of the Congress of the Confederacy, and was a member of that Senate at the time of the surrender of the Confederate forces to the armies of the United States. Subsequently, in 1865, he received from the President of the United States a full pardon for all offenses committed by his participation, direct or implied, in the rebellion. He produced this pardon and asked permission to continue as an attorney and counselor of

this court without taking the oath required by the Act of January 24, 1865, and the rule of the court which had adopted the clause requiring its administration in conformity with the Act of Congress. The court held that the law in exacting the oath as to his past conduct as a condition of his continuing in the practice of his profession, imposed a penalty for a past act, and in that respect was subject to the same objection as that made to the clauses of the Constitution of Missouri, and was therefore invalid.

[128]

There is nothing in these decisions which supports the positions for which the plaintiff in error contends. They only determine that one who is in the enjoyment of a right to preach and teach the Christian religion as a priest of a regular church, and one who has been admitted to practice the profession of the law, cannot be deprived of the right to continue in the exercise of their respective professions by the exaction from them of an oath as to their past conduct, respecting matters which have no connection with such professions. Between this doctrine and that for which the plaintiff in error contends, there is no analogy or resemblance. The Constitution of Missouri and the Act of Congress in question in those cases were designed to deprive parties of their right to continue in their professions for past acts or past expressions of desires and sympathies, many of which had no bearing upon their fitness to continue in their professions. The law of West Virginia was intended to secure such skill and learning in the profession of medicine that the community might trust with confidence those receiving a license under authority of the State.

Judgment affirmed.

---

[47] NATHAN ROSENWASSER AND JENNIE A. SPIETH, *Appts.*,

v.

JOHN BERRY.

(See S. C., erroneously entitled in Reporter's ed. *Rosenwasser* v. *Spieth*, 47-53.)

Letters patent—when invalid.

1. In an action in equity for the infringement of letters patent granted April 18, 1882, to Nathan Rosenwasser for improvements in percolators,—*held:*

First. That the plaintiff's contrivance, for which the patent was granted, is not new; and that, if it were new, there would be grave doubt whether it involved any invention.

Second. That, as the plaintiff's contrivance had been anticipated, half a century before, in the German publication mentioned in the opinion, it is unnecessary to decide whether, if new, it would have been patentable.

[No. 122.]

Argued Dec. 11, 12, 1888. Decided Jan. 14, 1889.

APPEAL from a decree of the Circuit Court of the United States for the District of Maine, that the plaintiff's letters patent were invalid, and dismissing a suit for their infringement. *Affirmed.*

Reported below, 22 Fed. Rep. 841.

The facts are stated in the opinion.

Mr. **William Henry Clifford**, for appellants:

The respondent must be accountable to us for the use of that part of his device which is our invention.

Lee v. *Blandy*, 2 Fish. Pat. Cas. 93; *Howes* v. *Nute*, 4 Cliff. 173.

Necessary parts, left out of the claim, if well described, are supplied by legal construction.

Kittle v. *Merriam*, 2 Curt. 479; *Gathwright* v. *Callaway Co.* 10 Mo. 665; *Richardson's App.* 7 Pat. Off. Gaz. 1053; *Wheeler* v. *Clipper Mower & Reaper Co.* 2 Pat. Off. Gaz. 442.

A description in a published work, to anticipate a patent, must be full, clear and exact, so as to reach the clearness of a patent specification.

Seymour v. *Osborne*, 78 U. S. 11 Wall. 555 (20: 42); *Cohn* v. *U. S. Corset Co.* 93 U. S. 370 (23: 908).

The translation must be free from doubt, and the burden of proof is on the respondent.

Bignall v. *Harvey*, 5 Bann. & Ard. 688; *Colgate* v. *Gold & S. Tel. Co.* 4 Bann. & Ard. 415

The prior publication must show the same organized machine as that in complainant's patent, operating in the same way.

Clark P. S. & F. Regulator Co. v. *Copeland*, 2 Fish. Pat. Cas. 221.

Where there are two translations, that which is most literal will be taken.

White v. *Allen*, 2 Cliff. 244.

Alleged prior use must be proved beyond a reasonable doubt.

Howes v. *Antiedel*, 8 Pat. Off. Gaz. 685; *Wood* v. *Cleveland Rolling Mill Co.* 4 Fish. Pat. Cas. 550-560; *Parham* v. *Am. Buttonhole, O. & S. Mach. Co.* Id. 468-482; *Sayles* v. *Chicago & N. W. R. Co.* Id. 584-590; *Crouch* v. *Speer*, 6 Pat. Off. Gaz. 187; *Roemer* v. *Simm*, 5 Pat. Off. Gaz. 555; *Coffin* v. *Ogden*, 85 U. S. 18 Wall. 120 (21: 821); *Campbell* v. *James*, 1 Blatchf. 42.

Mr. **Wilbur F. Lunt**, for appellee:

Invention must be new and useful. If it is a machine it must be operative, and accomplish the end practically and usefully in the way pointed out.

Parkhurst v. *Kinsman*, 1 Blatchf. 497.

There can be no invention in a simple enlargement of the orifice for the discharge of the percolate.

Vinton v. *Hamilton*, 104 U. S. 491 (26: 809).

The combination and device which the complainant Rosenwasser has patented was patented or described in some printed publication prior to his supposed invention or discovery.

Plimpton v. *Malcomson*, L. R. 3 Ch. Div. 531.

Mr. Justice **Gray**, delivered the opinion of the court: [48]

This is a bill in equity for the infringement of letters patent granted April 18, 1882, to Nathan Rosenwasser for improvements in percolators, with the following specification and claim:

"My invention relates to percolating apparatus to be employed for filtering purposes, or for making fluid extracts or decoctions, and it consists in a device constructed and adapted to operate substantially in the manner hereinafter specified.

"In the drawings, figure 1 represents my device in longitudinal section, and figure 2 shows the application of said device when used as a filter or in making fluid extracts.

"A is the main body of my percolator. B is a constricted inlet. C is the enlarged open end,

which serves the double purpose of a discharge or outlet, and of an opening through which the percolator is charged with filtering substance when the device is to be used as a filter, or with any drug from which an extract is to be made. D is a perforated plate. This plate may, if desired, be replaced by any porous diaphragm or interposing substance, such as filter paper, cloth, pumice, or the like. This is to prevent the drug from escaping from the percolator during its use, and it is to be secured in position by suitable means. E represents the drug from which an extract is to be made; or if the device is to be used as a filter, then E represents charcoal, sand, or any suitable filtering material.

"I will describe my apparatus as employed in making fluid extracts. The container A is charged with any drug or substance, E, from which an extract is to be made. The drug E is charged into the container A through the enlarged mouth C. Now, by the ordinary proc-
[49] ess and mechanism for making fluid extracts, it has heretofore been the practice to charge the menstruum into the large mouth C; but this method made it impracticable to obtain any increased or variable pressure upon the menstruum, unless a cap piece were fitted over the enlarged mouth C, and a tube or its equivalent attached, and connected either to an elevated reservoir containing the menstruum, or else some special pressure apparatus connected with said tube. All this in practice is impracticable, but by the employment of my device and method it is a very easy matter to charge the container A, and by applying the menstruum in exactly an opposite manner from that heretofore adopted, viz.: to the end of the container A, opposite the charging mouth C, to exert any desired pressure upon the menstruum. Fig. 2 of the drawings illustrates my method and mechanism, which consists, after the container A is charged in the usual manner through its enlarged mouth C, as already specified, in inverting the percolator, attaching a flexible or other tube, F, to the constricted mouth B, and applying the menstruum through said tube from an elevated reservoir G. When thus used, the enlarged mouth C becomes the ultimate discharge, which has never before, to my knowledge, been true in any method heretofore known or practiced. By elevating the reservoir G more or less, a greater or lighter pressure is exerted by the menstruum, and it is therefore driven through the drug more or less forcibly and rapidly. This pressure, as may readily be seen, can be nicely adjusted and varied at pleasure to suit the requirements of any case. A stop-cock, H, may be used to govern the quantity of the menstruum admitted to the percolator A.

"What I claim is: the combination, with a vessel, G, and adjustable tube, F, of a percolator, A, having a large filling and discharge orifice at its lower end, and a restricted opening, B, at its upper end, with which connects the lower end of the adjustable tube or pipe F, substantially as set forth."

The description of the percolator, and of the mode of using it to make fluid extracts or decoctions of drugs, amounts to this: The percolator is a cylinder wholly open at the lower end, and with a cover at the upper end, having a small opening, attached to which is a flexible [50
or adjustable tube leading from a reservoir of the liquid to be used for steeping the drug. The percolator is turned bottom up while the drug is put in, and a perforated or porous diaphragm inserted to hold the drug in place. It is then turned bottom down again. The pressure of the liquid, and consequently the quickness of its passage through the drug, are increased or diminished by elevating or lowering the reservoir, or by turning a stop-cock in the tube; and the extract is discharged through the bottom of the percolator into a vessel placed below.

The novelties suggested consist in having one end of the percolator open, serving both to receive the drug and to discharge the extract; in turning the percolator bottom up to put in the drug, and bottom down to let the extract drip out; in having a perforated or porous diaphragm to hold the drug in place; and in regulating the pressure of the liquid by means of a tube from the reservoir to the small opening in the covered end of the percolator.

But, passing over the difficulty that the diaphragm is not claimed as part of the combination patented, neither the percolator open at one end, the diaphragm, the inversion of the percolator, the insertion of the tube in the small opening in the covered end, nor the making that tube flexible and with a stop-cock, is new. All those elements appear in the Real press, as modified by Beindorf, described in Geiger's Handbuch der Pharmacie, published in 1830 at Stuttgart in Germany, which is an exhibit in the case, and a translation of the material parts of which (Vol. 1, pp. 157-160), verified by the oath of a witness for the defendant, and included in the record, appears, though not quite grammatical, to be substantially accurate, notwithstanding the opposing testimony introduced by the plaintiff to impugn its correctness.

It will be sufficient to quote from that translation the following passages:* "The Real press consists principally of a hollow cylinder, [5
which contains the powdered substance to be exhausted between two perforated plates, tightly packed, so that the substance cannot move to [in] either direction. If the cylinder is open at both ends, a cover is fitted air tight at one end, having a hole in the center, into which a long tube is fitted, also air tight. Between the cover and the perforated plate mentioned some space must remain. In extracting, the cylinder is placed vertical [upright], so that a vessel for gathering the liquid may be placed underneath." "A very practical change in the construction of the Real press has been introduced by Beindorf. The cylinder is fitted into a chair [frame], the cover or seat of which is movable, so that by turning [inverting] the same the press may be filled and connected with the tube." "The filled cylinder, turned bottom up, is placed up-

*"Die *Real'sche Presse* besteht der Hauptsache nach aus einem hohlen Cylinder, in welchem die auszuziehende Substanz im gepulverten Zustande zwischen 2 siebförmig durchlöcherten Platten fest gepackt enthalten ist, so dass sie nach keiner Seite hin weichen kann. Wenn der Cylinder an beiden enden offen ist, so wird an einem Ende ein Deckel luftdicht aufgepasst, welcher in der Mitte ein Loch hat, worein eine hohe Röhre ebenfalls luftdicht gesteckt wird. Zwischen dem Deckel und der obern siebförmigen Platte muss etwas Raum bleiben. Beim Extrahiren wird der Cylinder aufrecht fest-

[52] on a chair [frame] having a hole in the middle, in which the cylinder fits and around which he [it] rests." In the opening in the bottom, a tube is fitted, which may be made of tinned iron [tin plate], glass, wood, leather," etc. "Near the upper end of the tube is placed a vessel containing the menstruum [liquid solvent], the surface of which must be somewhat lower than the end of the tube. A syphon is now introduced into the liquid and in the tube, air sucked through the tube, so that the liquid will commence to flow through the syphon into the tube, which is thereby filled. The column of menstruum [liquid] thus obtained acts pressing and dissolving upon the substance to be extracted. It penetrates it, and arrives, laden with the soluble matter contained in the substance, at the lower end of the apparatus, often in a syrupy consistence." "In order to control the apparatus, stop or continue the operation, the tube is provided with a cock which may be closed if necessary, or the upper end of tube may be closed after removing the syphon."

This court concurs in opinion with the Circuit Judge that the plaintiff's contrivance is not new, and, that if it were new, there would be grave doubt whether it involved any invention. 22 Fed. Rep. 841. As the plaintiff's contrivance had been anticipated in the German publication half a century before, it is unnecessary to decide whether, if new, it would have been patentable.

Decree affirmed.

---

[86] DICK E. ARROWSMITH, *Appt.*,

v.

EDWARD H. GLEASON ET AL.

(See S. C. Reporter's ed. 86-101.)

Ohio Statute for sale of a minor's real estate—state decision—suit in equity, when proper—jurisdiction of circuit court—extent of relief—equity jurisdiction of fraud.

1. Under the Ohio Statute which enacts that upon application by the guardian of a minor, the probate court may order the sale of the minor's real estate, and which requires the guardian to execute a bond "with freehold sureties", the court may accept a guardian's bond with one surety, having sufficient property to make it good for the entire amount prescribed by the statute.

2. The Supreme Court of Ohio having decided that, where the probate court had jurisdiction of proceedings for the sale of a minor's real estate, and of the parties, the sale was not void by reason of the failure to require from the guardian the additional bond mentioned in section 27 of the Act on that subject, this construction of the local statute by such court should be followed.

3. A suit in equity to set aside the sale of the minor's real estate had under a proceeding in the probate court is proper, under the circumstances of this case. The action of ejectment does not afford an adequate remedy.

4. The proper Circuit Court of the United States may, without controlling, supervising, or annulling the proceedings of the state court, give such relief in a case like this as is consistent with the principles of equity, upon the ground of fraud.

5. The court, in such case, does not act as a court of review, nor inquire into irregularities of another court; but it will scrutinize the conduct of the parties, and if it finds that they have been guilty of fraud in obtaining a judgment or decree, it will deprive them of the benefit of it, and of any inequitable advantage which they have derived under it.

6. If a case of fraud be established, equity will set aside all transactions founded upon it, by whatever machinery or contrivances they may have been effected, whether such machinery or contrivances consist of a decree of equity and a purchase under it, or of a judgment at law, or of other transactions between the actors in the fraud.

[No. 133.]

Argued Dec. 18, 1888. Decided Jan. 14, 1889.

APPEAL from a decree of the Circuit Court of the United States for the Northern District of Ohio, dismissing on demurrer a suit to set aside and declare void proceedings for the sale of a minor's real estate instituted by his guardian in the Probate Court of Defiance County, in the State of Ohio, and for an accounting as to rents and profits. *Reversed.*

The facts are stated in the opinion.

Messrs. **Henry Newbegin** and **Benj. B. Kingsbury**, for appellant:

The third ground of demurrer is untenable.

Gaines v. *Fuentes*, 92 U. S. 10 (23:524); *Johnson* v. *Waters*, 111 U. S. 640, 667 (28:547, 556).

Defendant Gleason is a necessary party.

Harwood v. *Cincinnati & C. H. L. R. Co.* 84 U. S. 17 Wall. 78 (21: 558); *Gaylord* v. *Kelshaw*, 68 U. S. 1 Wall. 81 (17:612).

The allegations of the bill of the appellant bring this case within all the requirements of equity jurisdiction.

Freeman, Judg. § 495; *Davis* v. *Tileston*, 47 U. S. 6 How. 114 (12:366); *Shelton* v. *Tiffin*, 47 U. S. 6 How. 163 (12:387); *Long* v. *Mulford*, 17 Ohio St. 484; *Darst* v. *Phillips*, 41 Ohio St. 514; *Johnson* v. *Waters*, 111 U. S. 640 (28:547); *Baker* v. *O'Riordan*, 65 Cal. 368; *Taylor* v. *Walker*, 1 Heisk. 734; *Newcomb* v. *Dewey*, 27 Iowa, 381; 2 Pom. Eq. Jur. §§ 914, 915, 918; *Spellman* v. *Dowse*, 79 Ill. 66, 70; *Thomas* v. *Hite*, 5 B. Mon. 590; *Newland* v. *Gentry*, 18 B. Mon. 671.

Where infants have been deprived of a substantial right by a decree, courts of equity have sustained bills to impeach such decree.

Story, Eq. Pl. 8th ed. § 427; Adams, Eq. 4th Am. ed. 834; 1 Dan. Ch. Pr. 3d Am. ed. 153; *Lloyd* v. *Kirkwood*, 112 Ill. 330; *Long* v. *Mul-*

---

gestellt, so dass ein Gefäss zum Aufsammeln der Flüssigkeit untergestellt werden kann." "Eine sehr zweckmässige Abänderung der Real'schen Presse hat *Beindorf* vorgenommen. Der Cylinder wird in einen Stuhl gepasst, dessen Deckel beweglich ist, so dass durch Umdrehen desselben die Presse gefüllt und mit dem Rohr verbunden werden kann." "Der gefüllte, mit dem Boden nach oben gerichtete Cylinder wird auf einen Stuhl gestellt, der in der Mitte ein Loch hat, in welches derselbe passt und mit seinem Wulste aufliegt." "Den obern leeren Raum füllt man mit der auszuziehenden Flüssigkeiten an. und passt in die Oeffnung des Bodens eine Röhre, sie kann von Weissblech, Glas, Holz, oder ein lederner Schlauch u. s. w. seyn." "Neben das obere Ende der Röhre stelle man ein Gefäss mit der Ausziehungsflüssigkeit, so das der Spiegel der Flüssigkeit etwas niederer als das Ende der Röhre steht. Man senke jetzt einen Heber in die Flüssigkeit und in die Röhre, ziehe durch die Röhre mit dem Munde etwas Luft an, indem man mit den Lippen, dem Daumen, und Zeigefinger das Eindringen derselben von aussen zu hindern strebt; die Flüssigkeit wird sich heben und durch den Heber in die Röhre auslaufen, diese wird selbst damit angefüllt, und so wirkt die Flüssigkeit drückend und lösend auf die Substanz. Sie durchdringt sie und kommt, mit extractiven Theilen beladen, anfangs oft von Syrupsdicke, vollkommen klar hervor." "Um die Wirkung nach Belieben aufhören zu machen, bringt man einen Hahn an die Röhre, den man schliefst, oder man verschliefst nach weggenommenem Heber das obere Ende der Röhre."

ford, 17 Ohio St. 484; *Richmond* v. *Tayleur*, 1 P. Wms. 734; *Kuchenbeiser* v. *Beckert*, 41 Ill. 178; *Harris* v. *Youman*, 1 Hoff. Ch. 178; *Loyd* v. *Malone*, 23 Ill. 43; *Wright* v. *Miller*, 1 Sandf. Ch. 103; *Galatian* v. *Erwin*, 1 Hopk. Ch. 54; *Reynolds* v. *McCurry*, 100 Ill. 356.

The orders of the probate court are reviewable by such a proceeding in equity.

Johnson v. *Waters*, 111 U. S. 640 (28:547); *Gaines* v. *Fuentes*, 92 U. S. 10 (23:524); *McKeever* v. *Ball*, 71 Ind. 398; *Guynn* v. *McCauley*, 32 Ark. 97; *Musgrave* v. *Conover*, 85 Ill. 375; *Reynolds* v. *McCurry*, 100 Ill. 356.

Infants have always been favorites of a court of equity and the fraudulent devestiture of their lands under the guise of legal proceedings has frequently been the subject of review in courts.

Williamson v. *Berry*, 49 U. S. 8 How. 544 (12:1170); *Bank of U. S.* v. *Ritchie*, 33 U. S. 8 Pet. 140 (8:890); *Bright* v. *Boyd*, 1 Story, 486.

A departure from the law, though jurisdiction has been acquired, vitiates the judgment or order of sale.

Windsor v. *McVeigh*, 63 U. S. 274 (23:914); *U. S.* v. *Walker*, 109 U. S. 258 (27:927).

Where the statute provides that before a sale of lands of a ward, by his guardian, security shall be given by him, no suit can be maintained on the general bond of the guardian for the conversion of the proceeds.

Shelton v. *Smith*, 3 Baxt. 82; *Henderson* v. *Coover*, 4 Nev. 429; *Madison Co.* v. *Johnston*, 51 Iowa, 152; *Mattoon* v. *Cowing*, 13 Gray, 387; *Lyman* v. *Conkey*, 1 Met. 317; *Blauser* v. *Diehl*, 90 Pa. 350.

A cause will not be dismissed for the reason that a person might have been made a party, if the court can proceed to a decree without his presence.

Payne v. *Hook*, 74 U. S. 7 Wall. 425, 431 (19:260, 262); *Milligan* v. *Milledge*, 7 U. S. 3 Cranch, 220 (2:417); *Elmendorf* v. *Taylor*, 23 U. S. 10 Wheat. 153 (6:289); *Traders Nat. Bank* v. *Campbell*, 81 U. S. 14 Wall. 87, 94 (20:832, 833); Story, Eq. Pl. 9th ed. §§ 77, 79, 81.

Messrs. **Wm. C. Cochran, Henry B. Harris** and *John P. Cameron*, for appellees:

If the sales were void for want of jurisdiction, or for fraud in obtaining the orders, the remedy is equally adequate at law.

Hipp v. *Babin*, 60 U. S. 19 How. 271 (15:633); *Miles* v. *Caldwell*, 69 U. S. 2 Wall. 35-9, 43-5 (17:755-759); *Blanchard* v. *Brown*, 70 U. S. 3 Wall. 245-250 (18: 69-71); *Grand Chute* v. *Winegar*, 82 U. S. 15 Wall. 373 (21:174); *Lewis* v. *Cocks*, 90 U. S. 23 Wall. 466 (23:70); *Ellis* v. *Davis*, 109 U. S. 485-493-4 (27:1006-1008); *Killian* v. *Ebbinghaus*, 110 U. S. 568 (28:246); *Fussell* v. *Gregg*, 113 U. S. 550-5 (28:993-995); *U. S.* v. *Wilson*, 118 U. S. 86 (30:110); *Frost* v. *Spitley*, 121 U. S. 556 (30:1012); R. S. U. S. § 723.

A bill to quiet title cannot be sustained if complainant is out of possession.

2 Story, Eq. Jur. § 859; Bispham, Principles of Equity, § 575; *Orton* v. *Smith*, 59 U. S. 18 How. 263-65 (15:393, 394); *Stark* v. *Starr*, 78 U. S. 6 Wall. 402-9 (18:925-927); *U. S.* v. *Wilson*, 118 U. S. 86-8 (30:110, 111); *Frost* v. *Spitley*, 121 U. S. 556 (30:1012); *Clark* v. *Hubbard*, 8 Ohio, 382-5; *Rhea* v. *Dick*, 34 Ohio St. 420.

The Circuit Court of the United States cannot revise or set aside the final decree rendered by a state court, which had complete jurisdiction of the parties and of the subject matter.

Nougue v. *Clapp*, 101 U. S. 551 (25:1026); *Fouvergne* v. *N. O.* 59 U. S. 18 How. 470 (15:399); *Tarver* v. *Tarver*, 34 U. S. 9 Pet. 174-80 (9:91); *Adams* v. *Preston*, 63 U. S. 22 How. 473-91 (16:273-279) *Case of Broderick's Will*, 88 U. S. 21 Wall. 503 (22:599); *Ellis* v. *Davis*, 109 U. S. 485-94 (27:1006-1008); *Fussell* v. *Gregg*, 113 U. S. 550 (28:993); *Amory* v. *Amory*, 3 Biss. 266-70.

As to the allegations concerning Hardy's agreement with Gleason, and his want of knowledge and consent to the filing of his bond without another surety, it is enough to say that the fraud, if there was any, was upon Hardy; that Harmening was in no way connected with it; that the validity of the bond when filed in court was not affected thereby, and that Hardy could not escape his liability upon it.

Bigelow v. *Comeyys*, 5 Ohio St. 256; *Dangler* v. *Baker*, 35 Ohio St. 673-7; *Elliott* v. *Stevens*, 10 Iowa, 418; *Bloom* v. *Burdick*, 1 Hill, 130; *Glezen* v. *Rood*, 2 Met. 490-2; *Dair* v. *U. S.* 83 U. S. 16 Wall. 1 (21:491); *Keys* v. *Williamson*, 31 Ohio St. 562-3; Kneeland, Attach. § 540; Drake, Attach. § 134a.

A purchaser is not bound to look beyond the record in the proceedings to sell real estate.

Davis v. *Hudson*, 29 Minn. 27; *Maxson* v. *Sawyer*, 12 Ohio, 206; *Sheldon* v. *Newton*, 3 Ohio St. 494-501.

The sureties on a guardian's general bond were liable for moneys derived from the sales of real estate.

Withers v. *Hickman*, 6 B. Mon. 292; *Taylor* v. *Taylor*, Id. 559-61; *Elbert* v. *Jacoby*, 8 Bush, 542-7; *Com.* v. *Loyd*, 12 Phila. 221; *Stevenson* v. *State*, 71 Ind. 52-6; *Fee* v. *State*, 74 Ind. 66-9; *Lyman* v. *Conkey*, 1 Met. 320-1.

[87] *Mr. Justice* **Harlan** delivered the opinion of the court:

This suit involves the title to certain lands inherited by the plaintiff, and sold some years ago by his statutory guardian, the defendant Gleason, under authority conferred by proceedings instituted by him in the Probate Court of Defiance County, in the State of Ohio. The plaintiff attacks the order of sale as invalid, prays that the deeds executed to the purchaser be declared void, that an accounting in respect to rents and profits be had, and that such other relief be granted as may be proper. The court below sustained demurrers to the bill and dismissed the suit. We are therefore to inquire upon this appeal whether the bill discloses a cause of action entitling the appellant to relief in a court of equity.

The case made by the bill is substantially as follows: the lands in controversy formerly belonged to John C. Arrowsmith, who died in 1869, his wife and the plaintiff, his only child and heir at law, surviving him. On the 15th of July, 1869, Gleason petitioned said probate court to be appointed guardian of the estate of the plaintiff, then but six years of age. He applied to one Henry Hardy, a freeholder, to become surety upon his bond as guardian, in the penalty of $5,000, which Hardy did, upon the express agreement that, before the bond was delivered, Gleason would procure another surety of equal responsibility. Gleason filed the bond in the probate court without obtain-

ing the signature of an additional surety. The bond contained no condition except that if Gleason "shall faithfully discharge all his duties as guardian, then the above obligation is to be void; otherwise, to remain in full force." Upon its being filed, an order was made appointing Gleason guardian of the plaintiff's estate, and letters of guardianship were issued to him.

On the 22d of July, 1869, Gleason filed a petition in the Probate Court of Defiance County, representing that no personal estate of the ward had ever come to his possession or knowledge, and that there was no such estate dependent upon the settlement of the father's estate or upon the execution of any trust; that his ward was the owner of the fee simple of certain tracts of lands in Defiance County, one being section 36 in that county, containing 640 acres, less a small strip containing $6\frac{55}{100}$ acres used and occupied by the Wabash, St. Louis and Pacific Railroad Company as way-ground, and others, aggregating 400 acres; and, in addition, a tract of about seven acres in Paulding County; that the ward was also the owner of the fee simple, by virtue of tax titles, of certain other described tracts of lands in Defiance County, aggregating nearly 1,000 acres, all of which, the petition alleged, were wild lands, yielding no income; that he had received no rents whatever from any of the ward's real estate; that its sale was necessary for the maintenance and education of the ward, who was indebted for boarding and lodging in the sum of $210; that there were no liens upon it, to his knowledge, and that the widow had a dower interest in said lands. The prayer of the petition was that the infant and widow be made defendants; that dower be set off to the latter; that the guardian be ordered to sell the real estate for the purposes above set forth; and that petitioner have such other relief as was proper. The court ordered notice to be served upon the widow and infant of the hearing of the petition on the 10th day of August, 1869. Personal notice was given to the former, and the latter was notified by a written copy being left at the residence of his mother.

88]

The widow filed an answer in the probate court, waiving a formal assignment of dower by metes and bounds, and asking such sum out of the proceeds of sale, in lieu of dower, as was just and reasonable.

On the 10th of August, 1869, the cause was heard, the probate court deciding that the real estate named therein should be sold. Thereupon appraisers were appointed to report its fair cash value. On the 17th of August, 1869, the probate court, without having taken any bond from the guardian, except the one above referred to, which was conditioned simply for the faithful discharge of his duties, made this order: "It is therefore ordered by the court that the same [the report] be, and it is hereby approved and confirmed; and the said Edward H. Gleason having upon his appointment as such guardian given bond with reference to the value and sale of the said real estate of his said ward, which bond is now adjudged to be sufficient for the purposes hereof, therefore the giving of additional bond is hereby dispensed with." And on the 10th day of November, 1869, the following order of sale was entered in said cause: "Said guardian is ordered to proceed to sell said lands or any parcel thereof at private sale, but at not less than the appraised value thereof, and upon the following terms: one third cash in hand on the day of sale, one third in one year, and one third in two years, with interest, payable annually, and the deferred payments to be secured by mortgage on the premises sold."

[89]

Within a few days after this order was made, Gleason reported to the probate court that he had sold to John Frederick Harmening, at private sale, and for the sum of $1,537.50, "that being the full amount of the appraised value thereof," the southeast quarter of said section 36, excluding the small strip occupied by the railway company. The sale was approved and the guardian directed to make a conveyance to the purchaser, reserving for the widow, in lieu of dower, the sum of $400 out of the proceeds.

The bill charges that on the 15th of February, 1873, more than three years after the said order of sale was entered, and without any new or further appraisement of plaintiff's lands, though their value, as he was informed, had greatly advanced, and without any additional bond having been executed, Gleason, "for the purpose of getting money into his hands for his own private gain, and without reference to the true interest of his ward," and "willing to allow the said Harmening to get at a low and under price the lands" of the plaintiff, and "though there was no necessity whatever for said sale, as he, the said Gleason, and the said Harmening well knew," sold to the latter at private sale, for the sum of $872.10, the east half of the southwest quarter of section 36 in Defiance County, containing eighty acres, and the tract of $7\frac{11}{100}$ acres in Paulding County; which sale, being reported to the probate court, was by it wrongfully approved and a deed directed to be made and was made to the purchaser, the sum of $200 being reserved out of the proceeds, pursuant to the order of the court, for the dower interest of the widow.

[90]

The plaintiff also alleges that notwithstanding there was no necessity for any further sale or sacrifice of his estate of inheritance, Gleason, on the 4th day of December, 1874, although having in his hands, unexpended, large sums derived from the sale of the above premises, as well as considerable sums received from the release of tax titles, all of which was known to Harmening, and without any new appraisement of the plaintiff's lands (though they had risen greatly in value), and without giving an additional bond or obtaining a new order of sale, "for the purpose of getting money into his hands for his own private gain, without reference to the true interest of your orator in the premises, and willing that the said Harmening should get the lands bought at a low and under price, connived and colluded with him, the said Harmening, to sell the said lands hereinafter described in violation of his duties and the trust imposed on him, claiming to act on the said order of sale long since entered in said court, sold December 4, 1874, to Harmening the following described lands, situated in Defiance County aforesaid, viz.: the north half of section thirty-six, in township four north of range three east, and the west half of the same section in the same township and

range, containing together 400 acres, for the sum of $6,000, and reported the sale to the said court on the same day; and the same was, without proper examination, or opportunity for the friends of the said ward, your orator, or his relatives, to examine the same and advise the said court or the said Gleason in the premises, improperly—illegally confirmed the said sale, and ordered the said guardian to make, execute and deliver a deed for the same to the said Harmening on his compliance with the terms of sale, and further ordered the said guardian to pay out of the proceeds of said sale the sum of $1,500 as and for the dower interest therein held by the said Mary Arrowsmith."

[91] The bill further charges that the order authorizing said sales to be made as well as the orders confirming them were illegal; that the sales made by Gleason were in violation of his trust and in fraud of his rights, "as the said Harmening and the said Gleason well knew;" that he has never received from said Gleason or from any source, to his knowledge, any of the proceeds of such sales, nor to his knowledge, belief, or information, has any part thereof been applied for his benefit; and that the deeds, placed upon record by Harmening, so cloud his title to said lands that he cannot sell them or otherwise enjoy the beneficial use of them.

After averring that he has been a nonresident of Ohio since 1869; that Harmening enjoyed, up to his death, all the rents and profits of said lands; that his heirs at law, who are infants, and defendants herein, are in possession of them, claiming to hold them under said pretended sales and deeds; and that Gleason has been for a long time hopelessly insolvent, so that an action at law against him would be unavailing—he prayed that a decree be rendered setting aside and vacating the order of sale in the probate court, and all proceedings therein affecting his title to the lands, and declaring the same, as well as the deeds executed by his pretended guardian, to be void and of no effect. He also prayed for the additional relief, specific and general, indicated in the beginning of this opinion.

[95] One of the grounds of demurrer was that the plaintiff had, upon his own showing, a plain, adequate and complete remedy at law, namely: an action of ejectment for the recovery of the lands in controversy. The Statutes of Ohio, in force at the time Gleason was appointed guardian, as well as when these lands were sold by him, provides that, "Before any person shall be appointed guardian of the estate of any minor, he . . . shall give bond, with freehold sureties, payable to the State of Ohio, . . . which bond shall be conditioned for the faithful discharge of the duties of said person as such guardian, and shall be approved by the court making such appointment." S. & C. R. S. Ohio, p. 671. The same statutes prescribe the mode in which, and the purposes for which, the real estate of a minor may be sold. They give power to the probate court, by which the guardian of the person and estate, or of the estate only, was appointed, upon the application by petition of such guardian, to order the sale of the minor's real estate, whenever necessary for his education or support, or for the payment of his just debts, or for the discharge of any liens on his real estate, or when such estate is suffering unavoidable waste, or a better investment of the value thereof can be made; and, if it is satisfied that his real estate ought to be sold, then three freeholders must be appointed to appraise, under oath, its fair cash value. It is further provided:

"Sec. 27. Upon the appraisement of said real estate being filed, signed by said appraisers, the court shall require such guardian to execute a bond, with sufficient freehold sureties, payable to the State of Ohio, in double the appraised value of such real estate, with condition for the faithful discharge of his duties, and the faithful payment and accounting for of all moneys arising from such sale according to law.

"Sec. 28 (as amended by the Act of February 15, 1867). Upon such bond being filed and approved by the court, it shall order the sale of such real estate, . . . *Provided, however*, That if it is made to appear to such probate court that it will be more for the interest of said ward to sell such real estate at private sale, it may authorize said guardian to sell, either in whole [96] or in parcels, and upon such terms of payment as may be prescribed by the court; and in no case shall such real estate be sold at private sale for less than the appraised value thereof." R. S. Ohio, 1 S. & C. 671, 672, 675; §§ 6, 22–28 inclusive; 1 S. & S. 383.

It is evident that the bill was framed upon the theory: (1) that the bond given by the guardian at the time of his appointment was void, because filed in violation of Gleason's agreement with Hardy, and because it contained the name of but one surety; (2) the probate court was without jurisdiction, and its proceedings were absolutely void, because the guardian did not execute the additional bond required by the two sections last above quoted. If these propositions were sound it might be, as contended, that the plaintiff has a plain, adequate, and complete remedy at law. But we are of opinion that they cannot be sustained. As to the first one, it is clear that the delivery of the bond that Hardy signed, without procuring an additional surety, was a thing of which he, but not the plaintiff, may complain. Besides, the statute, upon any reasonable interpretation, does not require a bond with more than one freehold surety. The words "with freehold sureties" are not to be taken literally, so as to forbid the acceptance of a guardian's bond, with one surety, having sufficient property to make it good for the entire amount prescribed by the statute.

As to the suggestion that the proceedings in the probate court were void, because of its failure, upon the return of the appraisement, to require from the guardian an additional bond conditioned "for the faithful discharge of his duties, and the faithful payment and accounting for of all moneys arising from such sale according to law," we are of opinion that it is fully met by the decision of the Supreme Court of Ohio in *Arrowsmith* v. *Harmening*, 42 Ohio St. 254, 259. That was an action at law by the present appellant against Harmening to recover possession of the real estate now in controversy. The question was there distinctly made by him that the order of sale by the probate court was void, by reason of its neg-

[97] lecting to take this additional bond. Adhering to its prior decision in *Mauarr* v. *Parrish*, 26 Ohio St. 636, the court held that, although the order of sale and the confirmation of the sales may have been erroneous, the probate court had jurisdiction of the subject matter, and of the parties, and its action, therefore, was not void. It further said that the decision in *Mauarr* v. *Parrish* had become a rule of property in Ohio, and could not be disturbed without consequences of a mischievous character. It is thus seen that the question now presented, as to the jurisdiction of the probate court to make the order for the sale of the lands now in controversy, and to confirm the several sales reported by the guardian, has been determined adversely to the appellant in an action brought by him against the present appellees. As this construction of the local statute should, under the circumstances stated by the Supreme Court of Ohio, be followed by the circuit court, we cannot approve the suggestion that the appellant has an adequate remedy by an action of ejectment for the recovery of these lands.

But is the appellant without remedy for the wrong alleged to have been done to him? We think not. If all the substantial averments of his bill are true—and, upon demurrer, they must be so regarded—he makes a case of actual fraud, upon the part of his guardian, in which Harmening to some extent participated, or of which, at the time, he either had knowledge or such notice as put him upon inquiry. According to these averments, there was no necessity whatever for these sales, at least for the sale of the east half of the southwest quarter of section 36, township 4 north, range 3 east, in Defiance County, containing eighty acres, or of the smaller tract in Paulding County, or of the 400 acres in Defiance County that were sold in December, 1874. It is alleged, and by the demurrer it is admitted, that when the last sale was made, Gleason had in his hands unexpended, as Harmening well knew, large sums derived from the previous sales, as well as considerable amounts received from releases of tax titles on lands held by appellant; and yet, by collusion with Harmening, and in order that [98] the latter might get the lands for less than their value, he made the sale of the 400 acres.

But it is insisted that the Circuit Court of the United States, sitting in Ohio, is without jurisdiction to make such a decree as is specifically prayed for, namely: a decree setting aside and vacating the orders of the Probate Court of Defiance County. If by this is meant only that the circuit court cannot by its orders act directly upon the probate court, or that the circuit court cannot compel or require the probate court to set aside or vacate its own orders, the position of the defendants could not be disputed. But it does not follow that the right of Harmening, in his lifetime, or of his heirs since his death, to hold these lands, as against the plaintiff, cannot be questioned in a court of general equitable jurisdiction upon the ground of fraud. If the case made by the bill is clearly established by proof, it may be assumed that some state court, of superior jurisdiction and equity powers, and having before it all the parties interested, might afford the plaintiff relief of a substantial character. But whether that be so or not, it is difficult to perceive why the circuit court is not bound to give relief according to the recognized rules of equity, as administered in the Courts of the United States, the plaintiff being a citizen of Nevada, the defendants citizens of Ohio, and the value of the matter in dispute, exclusive of interest and costs, being in excess of the amount required for the original jurisdiction of such courts.

A leading case upon this point is *Payne* v. *Hook*, 74 U. S. 7 Wall. 425, 430 [19:260, 261].

That was a suit, in the Circuit Court of the United States for Missouri, by a citizen of Virginia, against a public administrator, to obtain a distributive share of an estate then under administration in a court of Missouri. It was objected that the complainant, if a citizen of Missouri, could obtain redress only through the local probate court, and that she had no better or different rights by reason of being a citizen of Virginia. But this court, observing that the constitutional right of the citizen of one State to sue a citizen of another State in the Courts of the United States, instead of resorting to a state tribunal, would be worth nothing, if the court in which the suit is instituted [99] could not proceed to judgment and afford a suitable measure of redress, said: "We have repeatedly held that the jurisdiction of the Courts of the United States, over controversies between citizens of different States, cannot be impaired by the laws of the States which prescribe the modes of redress in their courts, or which regulate the distribution of their judicial power. If legal remedies are sometimes modified to suit the changes in the laws of the States and the practice of their courts, it is not so with equitable. The equity jurisdiction conferred on the federal courts is the same as that the High Court of Chancery in England possesses; is subject to neither limitation nor restraint by state legislation, and is uniform throughout the different States of the Union. The Circuit Court of the United States for the District of Missouri, therefore, had jurisdiction to hear and determine this controversy, notwithstanding the peculiar structure of the Missouri probate system, and was bound to exercise it, if the bill, according to the received principles of equity, states a case for equitable relief. The absence of a complete and adequate remedy at law is the only test of equity jurisdiction, and the application of this principle to a particular case must depend on the character of the case as disclosed in the pleadings."

While there are general expressions in some cases apparently asserting a contrary doctrine, the later decisions of this court show that the proper Circuit Court of the United States may, without controlling, supervising, or annulling the proceedings of state courts, give such relief, in a case like the one before us, as is consistent with the principles of equity. As said in *Barrow* v. *Hunton*, 99 U. S. 80, 85 [25: 407, 408], the character of the case is always open to examination, "for the purpose of determining whether, *ratione materiæ*, the Courts of the United States are incompetent to take jurisdiction thereof. State rules on the subject cannot deprive them of it."

This whole subject was fully considered in *Johnson* v. *Waters*, 111 U. S. 640, 667 [28:547, 556]. That was an original suit in the Circuit

Court of the United States for the District of Louisiana. It was brought by a citizen of Ken-
[100] tucky against citizens of Lousiana. Its main object was to set aside as fraudulent and void certain sales made by a testamentary executor under the orders of a probate court in the latter State. It was contended that the plaintiff was concluded by the proceedings in the probate court, which was alleged to have exclusive jurisdiction of the subject matter, and that its decision was conclusive against the world, especially against the plaintiff, a party to the proceedings. This court, while conceding that the administration of the estate there in question properly belonged to the probate court, and that, in a general sense, the decisions of that court were conclusive and binding, especially upon parties, said: "But this is not universally true. The most solemn transactions and judgments may, at the instance of the parties, be set aside or rendered inoperative for fraud. The fact of being a party does not estop a person from obtaining in a court of equity relief against fraud. It is generally parties that are the victims of fraud. The court of chancery is always open to hear complaints against it, whether committed *in pais* or in or by means of judicial proceedings. In such cases the court does not act as a court of review, nor does it inquire into any irregularities or errors or proceeding in another court; but it will scrutinize the conduct of the parties and if it finds that they have been guilty of fraud in obtaining a judgment or decree, it will deprive them of the benefit of it and of any inequitable advantage which they have derived under it"—citing Story, Eq. Jur. §§ 1570, 1573; Kerr, Fraud & M. 352, 353; *Gaines* v. *Fuentes*, 92 U. S. 10 [23: 524]; and *Barrow* v. *Hunton*, 99 U. S. 80 [25:407].

So, in *Reigal* v. *Wood*, 1 Johns. Ch. 402, 406: "Relief is to be obtained not only against writings, deeds, and the most solemn assurances, but against judgments and decrees, if obtained by fraud and imposition." To the same effect is *Bowen* v. *Evans*, 2 H. L. Cas. 257, 281: "If a case of fraud be established equity will set aside all transactions founded upon it, by whatever machinery they may have been effected, and notwithstanding any contrivances by which it may have been attempted to protect them. It is immaterial, therefore, whether such machinery and contrivances consisted of a
[101] decree of equity, and a purchase under it, or of a judgment at law, or of other transactions between the actors in the fraud." See also *Colclough* v. *Bolger*, 4 Dow, P. C. 54, 64; *Barnesly* v. *Powel*, 1 Ves. Sr. 120, 284, 289; *Richmond* v. *Tayleur*, 1 P. Wms. 786; *Niles* v. *Anderson*, 5 How. (Miss.) 365, 386.

These principles control the present case which, although involving rights arising under judicial proceedings in another jurisdiction, is an original, independent suit for equitable relief between the parties; such relief being grounded upon a new state of facts, disclosing not only imposition upon a court of justice in procuring from it authority to sell an infant's lands when there was no necessity therefor, but actual fraud in the exercise, from time to time, of the authority so obtained. As this case is within the equity jurisdiction of the circuit court, as defined by the Constitution and laws of the United States, that court may, by its decree, lay hold of the parties, and compel them to do what according to the principles of equity they ought to do, thereby securing and establishing the rights of which the plaintiff is alleged to have been deprived by fraud and collusion.

The decree is reversed and the cause remanded, with directions to overrule the demurrers, to require the defendants to answer, and for further [70]
proceedings consistent with law.

ROBERT H. ANDERSON, *Appt.*,
v.
HENRY T. MILLER ET AL., Partners under the Firm Name of H. T. MILLER & Co.

(See S. C. Reporter's ed. 70-73.)

Letters patent—infringement of.

In an action for an infringement of letters patent No. 265,733, granted to Robert H. Anderson, October 10, 1882, for an improvement in drawers, *held*, that there has been no infringement of the patent by the defendants; that it is proved that defendants had been manufacturing garments, identical with those alleged to infringe plaintiff's patent, for more than two years prior to the application for the patent.

[No. 185.]

Argued Dec. 19, 1888. Decided Jan. 14, 1889.

APPEAL from a decree of the Circuit Court of the United States for the Eastern District of Virginia, dismissing a suit in equity for an infringement of letters patent No. 265,733, granted to Robert H. Anderson, October 10, 1882, for an improvement in drawers. *Affirmed.*

The facts are stated in the opinion.

Mr. **Chas. S. Whitman,** for appellant.

Mr. **Jno. S. Wise,** for appellees.

Mr. Justice **Lamar** delivered the opinion of [71]
the court:

This is a suit in equity, brought in the Circuit Court of the United States for the Eastern District of Virginia, by the appellant against the appellees, founded on an alleged infringement by them of letters patent No. 265,733, granted to appellant, October 10, 1882, upon an application filed June 24, 1882, for an improvement in drawers.

The alleged infringement consisted in appellees' placing on drawers manufactured by them a patch extending down the front and lapping the seam of the crotch by at least half an inch, which process of re-enforcing the garment, it was alleged, was the invention of the appellant.

The bill avers that "The defendants, Henry T. Miller and William Mitchell, both of the City of Richmond, in the County of Henrico and State of Virginia, and citizens of the said State of Virginia, constituting the firm of Henry T. Miller & Co., doing business at Richmond, in the county, State, and district aforesaid . . . are now using said patented improvements, or improvements in some parts thereof substantially the same in construction and operation as in the letters patent mentioned, and, in violation of his rights, have made, used, and vended within the Eastern District of Virginia . . . large quantities of drawers described and claimed in the letters patent aforesaid," etc.

The answer of the defendants, in their own separate names, with the firm name, precisely as they are stated by the bill, in response to complainant's interrogatories, admits that they

are residents of Richmond, Virginia, and engaged in the business of the manufacture and vending of drawers for the clothing trade in that city.

The averments of the answer, material to this inquiry, are, "that drawers, as re-enforced as [72] described in letters patent of plaintiff, had been made and in public use and on sale by sundry and divers persons for many years prior to plaintiff's application;" that they, the defendants, "had been manufacturing one particular kind, and only one particular kind, of re-enforced drawers for more than five years hitherto continuously, a specimen of which drawers, manufactured by them, is filed as 'Exhibit A,' etc., and that these are the only kind of re-enforced drawers that have been manufactured by them or either of them during the last five years;" and that, "even if the drawers manufactured by them are either identically or substantially the same as those manufactured by the complainant, he is entitled to no relief whatever against them, because these respondents are prepared to prove that Henry T. Miller & Co. and Henry T. Miller have hitherto continuously for over five years manufactured the identical re-enforced drawers filed as 'Exhibit A,' and that for over four years prior to the application for said patent they used and sold re-enforced drawers of the pattern and design of those now filed as 'Exhibit A,' and none other."

The circuit court dismissed the bill, and an appeal from that decree of dismissal brings the case here.

It is contended by the appellant that the answer of the defendants below did not contain a sufficient notice, under the statute, of the defense of want of novelty and two years' public use, in that it did not state the names and places of residence of the persons by whom and where it was used. The object of this statutory requirement is to apprise the plaintiff of the nature of the evidence which he must be ready to meet at the trial. This object is substantially and fully accomplished by the pleadings in this case, and we decline to disturb the action of the court below overruling the motion made at the hearing to strike out the testimony of the witnesses for the defense, who testified to the prior use of the patented article.

We do not deem it necessary to consider the question whether the patent of the appellant is for a new and useful invention within the meaning of section 4886 *et seq.*, R. S., inasmuch [73] as it is the opinion of this court that there has been no infringement of it in this case by the appellees. It is satisfactorily shown by the evidence in the record that for more than two years prior to the application for the patent in question the appellees had been manufacturing at their place of business at Richmond, Virginia, garments identical in pattern with those that are now alleged to infringe appellant's patent.

The decree of the Circuit Court is affirmed.

---

[101] DAVIS TILLSON ET AL., *Appts.*,

v.

UNITED STATES.

(See S. C. Reporter's ed. 101-104.)

Court of Claims—liability of the United States on contract.

1. In a suit to recover from the United States, under its contract to pay the cost of certain labor, tools and materials and insurance on the same, *held:* that the United States was not bound to pay for insurance which has not been effected.

2. Where, by such contract the United States assumed the risk of damage to cutting on certain stone while being transported, *held:* that it was not thereby bound to pay a loss by a peril of the sea, by which the vessel while carrying the stone was sunk.

[No. 227.]

Submitted Dec. 19, 1888. Decided Jan. 14, 1889.

APPEAL from a judgment of the Court of Claims, dismissing a suit to recover money under contract. *Affirmed.*

Reported below, 20 Ct. Cl. 213.

The facts are stated in the opinion.

Mr. **Halbert E. Paine**, for appellants.

Messrs. **A. H. Garland**, *Atty-Gen.*, **R. A. Howard**, *Assist. Atty-Gen.*, and **W. I. Hill**, *Assist. Atty.*, for the United States, appellee.

Mr. Justice **Gray** delivered the opinion of [102] the court:

This was a suit to recover money under contracts made in 1873 and 1877 between the supervising architect of the Treasury, in behalf of the United States, and the petitioners. The court of claims dismissed the petition. 20 Ct. Cl. 213. The petitioners appealed, and at the argument in this court have insisted upon two claims only.

By the contract of 1873, the petitioners agreed to cut and furnish from their quarry at Hurricane Island in the State of Maine, and to deliver at St. Louis in the State of Missouri, as much granite as might be required for the construction of a custom house at St. Louis; the United States agreed to pay them specified prices by the cubic foot for the granite upon its delivery and acceptance at the site of the custom house; the petitioners agreed "to furnish all the labor, tools and materials necessary to cut, dress and box at the quarry all the granite aforesaid;" and the United States agreed to pay them "in lawful money of the United States, the full cost of the said labor, tools and materials, and insurance on the same, increased by 15 per centum thereof."

The court of claims found as facts that in performance of this contract the petitioners delivered at St. Louis a large quantity of dressed granite, which was transported by sea from Hurricane Island to Baltimore, and thence by railway to St. Louis. It also found the reasonable price and value of marine insurance on the granite from Hurricane Island to Baltimore, as compared with the value of the granite, and with the cost of cutting it; [103] no part of such insurance or of 15 per cent thereon had been paid to the petitioners; and that no insurance on the granite was actually effected or paid for by them.

The first claim is based upon the clause in this contract by which the United States agreed to pay to the petitioners "the full cost of the said labor, tools and materials, and insurance on the same." The petitioners contend that the insurance thus agreed to be paid for is insurance on the cost of the labor, tools and materials used, that is to say, on that part of the value of the cut granite which was represented by the cost of the labor, tools and materials used in cutting and boxing it.

We have not found it necessary to consider whether the words "insurance on the same" mean insurance on the granite, or insurance on the cost of the labor, tools and materials used in cutting and boxing it, or only insurance on the materials so used; because, it being found as a fact that the petitioners never did effect or pay for any insurance whatever, we are clearly of opinion that they are not entitled to recover anything for insurance. The United States have not agreed to obtain insurance, or to become insurers themselves, but only to pay to the petitioners the "cost of insurance," which is as much as to say, reasonable premiums of insurance paid by the petitioners. By the terms of the contract, the United States are no more bound to pay for insurance which has not been effected, than for tools or materials which have not been used, or for labor which has not been performed.

The second claim arises under the contract of 1877, in which the contract of 1873 was modified; the clause as to insurance omitted; the petitioners agreed to furnish, cut, dress and box and deliver at St. Louis the granite required for the exterior walls of the building; and the United States "assume all risk of damage to cutting on said stone while being transported to the site of said building, provided such damage does not result from the carelessness or negligence of" the petitioners.

A vessel laden with granite cut and dressed [104] under this contract was sunk at sea by collision, and her cargo was raised by wreckers employed by the master, and was taken to Baltimore in another vessel. The petitioners seek to recover from the United States such a proportion of the expense of raising the cargo as the value of the cutting bore to the whole value of the granite.

But the only risk assumed by the United States under this contract was of "damage to cutting on said stone while being transported," which evidently looks only to injuries to the smooth surface or the sharp edges of the cut granite in the course of transportation, and not to a loss, by a peril of the sea, of the granite with its cutting uninjured. Such a loss, as well as any expenses incurred by the petitioners in recovering the granite, fell upon them by virtue of their agreement to deliver the granite at St. Louis.

Judgment affirmed.

---

[141] WALTER H. STOUTENBURGH, Intendant of the WASHINGTON ASYLUM, *Plff. in Err.*,

v.

WILLIAM J. HENNICK.

(See S. C. Reporter's ed. 141-151.)

District of Columbia—power of Legislative Assembly—law requiring commercial agents to procure a license—invalidity of—power to make laws.

1. Congress has express power to exercise exclusive legislation over the District of Columbia; but, in creating the District of Columbia a body corporate for municipal purposes, Congress could only authorize it to exercise municipal powers.

2. Congress did not delegate to the Legislative Assembly of that District the power to enact clause 3 of section 21 of the Act of that Assembly requiring commercial agents to pay $200 annually for a license.

3. Although, by several Acts, Congress repealed or modified other parts of said Act of said Assembly which were within the scope of municipal action, such congressional legislation did not ratify the above mentioned objectionable clause.

4. While the power to make laws cannot be delegated, the creation of municipalities exercising local self government cannot be held to trench upon that rule.

[No. 722.]

Submitted Dec. 18, 1888. Decided Jan. 14, 1889.

IN ERROR to the Supreme Court of the District of Columbia, to review a judgment of that Court discharging from custody Hennick, the defendant in error, who was convicted in the Police Court of that District for engaging in the business of a commercial agent without having obtained a license contrary to an Act of the Legislative Assembly of that District. *Affirmed.*

Reported below, 1 I. S Com. Rep. 66; 7 Cent. Rep. 357, and 5 Mackey, 489.

Statement by *Mr. Chief Justice* **Fuller:** [142]

Hennick, the defendant in error, was convicted in the Police Court of the District of Columbia, upon an information stating that he, in April, 1887, "did engage in the business of a commercial agent, to wit: the business of offering for sale, as agent of Lyons, Conklin & Co., a firm doing business in the City of Baltimore, State of Maryland, certain goods, wares, and merchandise by sample, catalogue, and otherwise, without having first obtained a license to do so, contrary to and in violation of an Act of the late Legislative Assembly of the District of Columbia, entitled 'An Act Imposing a License on Trades, Business, and Professions Practiced or Carried on in the District of Columbia,' and providing for the enforcement and collection of fines and penalties for carrying on business in the said District without license approved August 23, A. D. 1871, and the amendments to the said Act, approved June 20, A. D. 1872," and sentenced "to pay a fine of $5, in addition to the license tax of $200, and in default to be committed to the workhouse for the term of sixty days," and being in default was so committed. He applied to one of the Justices of the Supreme Court of the District for and obtained a writ of *habeas corpus*, which was certified to be heard in the first instance in the general term of that court, and, upon hearing, it was held "that the law for the violation of which the petitioner is held is not a valid law," and his discharge from custody was ordered accordingly; whereupon, this writ of error was sued out.

The Act in question was passed by the then Legislative Assembly of the District, August 23, 1871, and amended June 20, 1872 (Laws District Columbia, Acts First Session, p. 87; Acts Second Session, p. 60), and by its first [143] section it was provided:

"That no person shall be engaged in any trade, business, or profession hereinafter mentioned until he shall have obtained a license therefor as hereinafter provided."

Then followed twenty-three sections, of which the twenty-first is subdivided into forty-eight clauses. Clause 3 was so amended as to read:

"Commercial agents shall pay two hundred dollars annually. Every person whose business it is, as agent, to offer for sale goods, wares

or merchandise by sample, catalogue or otherwise, shall be regarded as a commercial agent."

Section 4 of the Act is in these words:

"That every person liable for license tax, who failing to pay the same within thirty days after the same has become due and payable, for such neglect shall, in addition to the license tax imposed, pay a fine or penalty of not less than five nor more than fifty dollars, and a like fine or penalty for every subsequent offense."

And then follows a proviso not material here.

A part of the Act was repealed by Congress February 17, 1873 (17 Stat. at L. 464); the 28d section, and clauses 20 and 35 of the 21st section, and clause 16 of the 21st section as amended, were repealed and modified July 12, 1876 (19 Stat. at L. 88), as were also, on January 26, 1887, parts of clause 38 of section 21 as amended, and of section 15.

Sections 1 and 18 of the Act of Congress of February 21, 1871, entitled "An Act to Provide Government for the District of Columbia" (16 Stat. at L. 419), are as follows:

Sec. 1. "That all that part of the territory of the United States included within the limits of the District of Columbia be, and the same is hereby, created into a Government by the name of the District of Columbia, by which name it is hereby constituted a body corporate for municipal purposes, and may contract and be contracted with, sue and be sued, plead and be impleaded, have a seal, and exercise all other powers of a municipal corporation not inconsistent with the Constitution and laws of the United States and the provisions of this Act."

"Sec. 18. That the legislative power of the [144] District shall extend to all rightful subjects of legislation within said District, consistent with the Constitution of the United States and the provisions of this Act, subject, nevertheless, to all the restrictions and limitations imposed upon States by the tenth section of the first article of the Constitution of the United States; but all Acts of the Legislative Assembly shall at all times be subject to repeal or modification by the Congress of the United States, and nothing herein shall be construed to deprive Congress of the power of legislation over said District in as ample manner as if this law had not been enacted."

These sections are carried forward into the Act of Congress of June 22, 1874, entitled "An Act to Revise and Consolidate the Statutes of the United States, General and Permanent in Their Nature, Relating to the District of Columbia, in Force on the First Day of December, in the Year of Our Lord One Thousand Eight Hundred and Seventy-Three," and sections 2, 49 and 50.

Mr. **Henry E. Davis,** for plaintiff in error:

Whether the law regulates commerce, in the sense of the Constitution, is immaterial. Whether it does so regulate commerce may be determined by the following cases:

Robbins v. *Shelby Co. Tax. Dist.* 120 U. S. 489 (30:694); *Corson* v. *Md.* 120 U. S. 505 (30:700); *Fargo* v. *Mich.* 121 U. S. 230 (30:888); *Ouachita Packet Co.* v. *Aiken*, 121 U. S. 444 (30:976); *Phila. & S. Steamship Co.* v. *Pa.* 122 U. S. 326 (30:1200); *Western U. Teleg. Co.* v. *Pendleton*, 122 U. S. 347 (30:1187); *Boeman* v. *Chicago & N. W. R. Co.* 125 U. S. 465 (31:700); *Ratterman* v. *Western U. Teleg. Co.* 127 U. S. 411 (*ante*, 229); *Leloup* v. *Port of Mobile*, 127 U. S. 640 (*ante*, 311).

The District of Columbia is not a State, within the meaning of the Constitution.

Hepburn v. *Ellzey*, 6 U. S. 2 Cranch, 445 (2:332); *N. O.* v. *Winter*, 14 U. S. 1 Wheat. 91 (4:44); *Scott* v. *Jones*, 46 U. S. 5 How. 377 (12:181); *Barney* v. *Baltimore*, 73 U. S. 6 Wall. 287 (18:827); *Balt. & O. R. Co.* v. *Harris*, 79 U.S. 12 Wall. 86 (20:359).

Messrs. Francis M. Darby, **Skipwith Wilmer, Guion Miller,** *John Henry Keene, Jr.*, **Archibald Stirling** and **Henry Wise Garnett,** for defendant in error:

Under the general powers given to the Legislature of the District, it cannot legislate on general subjects.

Roach v. *Van Riswick*, McArt. & M. 171; *Cooper* v. *Dist. of Col.* Id. 250; *Dist. of Col.* v. *Waggaman*, 4 Mackey, 333; § 93, R. S. D. C.; *Dunphy* v. *Kleinschmidt*, 78 U. S. 11 Wall. 610 (20:223); *Re Hennick*, 7 Cent. Rep. 357.

Taxes on the commerce of the States to support local expenses of the District cannot be imposed.

Cooley, Const. Law, 499.

A municipality can have no greater power than a State, and this court has decided that a State has no such power.

Walling v. *Mich.* 116 U. S. 446 (29:694); *Ex parte Stockton*, 33 Fed. Rep. 95; *Robbins* v. *Shelby Co. Tax. Dist.* 120 U. S. 489 (30:694); *Fargo* v. *Mich.* 121 U. S. 230 (30:888); *Phila. & S. Steamship Co.* v. *Pa.* 122 U. S. 326 (30:1200).

Mr. Chief Justice **Fuller** delivered the opin- [147] ion of the court:

It is a cardinal principle of our system of government, that local affairs shall be managed by local authorities, and general affairs by the central authority; and hence while the rule is also fundamental that the power to make laws cannot be delegated, the creation of municipalities exercising local self government has never been held to trench upon that rule. Such legislation is not regarded as a transfer of general legislative power, but rather as the grant of the authority to prescribe local regulations, according to immemorial practice, subject of course to the interposition of the superior in cases of necessity.

Congress has express power "to exercise exclusive legislation in all cases whatsoever" over the District of Columbia, thus possessing the combined powers of a general and of a State Government in all cases where legislation is possible. But as the repository of the legislative power of the United States, Congress in creating the District of Columbia "a body corporate for municipal purposes" could only authorize it to exercise municipal powers; and this is all that Congress attempted to do.

The Act of the Legislative Assembly under which Hennick was convicted, imposed, as stated in its title, "a license on trades, business, and professions practiced or carried on in the District of Columbia," and required by clause 3 of section 21, among other persons in trade, commercial agents, whose business it was to offer merchandise for sale by sample, to take out and pay for such license. This provision

was manifestly regarded as a regulation of a purely municipal character, as is perfectly obvious, upon the principle of *noscitur a sociis*, if the clause be taken as it should be, in connection with the other clauses and parts of the [148] Act. But it is indistinguishable from that held void in *Robbins* v. *Shelby County Taxing District*, 120 U. S. 489 [30: 694] and *Asher* v. *Texas*, 128 U. S. 129 [*ante*, 368] as being a regulation of interstate commerce, so far as applicable to persons soliciting, as Hennick was, the sale of goods on behalf of individuals or firms doing business outside the District.

The conclusions announced in the case of Robbins were that the power granted to Congress to regulate commerce is necessarily exclusive whenever the subjects of it are national or admit only of one uniform system or plan of regulation throughout the country, and in such case the failure of Congress to make express regulations is equivalent to indicating its will that the subject shall be left free; that in the matter of interstate commerce the United States are but one country, and are and must be subject to one system of regulations, and not to a multitude of systems; and that a state statute requiring persons soliciting the sale of goods on behalf of individuals or firms doing business in another State to pay license fees for permission to do so, is, in the absence of congressional action, a regulation of commerce in violation of the Constitution. The business referred to is thus definitively assigned to that class of subjects which calls for uniform rules and national legislation, and is excluded from that class which can be best regulated by rules and provisions suggested by the varying circumstances of different localities, and limited in their operation to such localities respectively. *Cooley* v. *Phila. Board of Wardens*, 53 U. S. 12 How. 299 [13: 996]; *Gilman* v. *Philadelphia*, 70 U. S. 3 Wall. 713 [18: 96]. It falls, therefore, within the domain of the great, distinct, substantive power to regulate commerce, the exercise of which cannot be treated as a mere matter of local concern and committed to those immediately interested in the affairs of a particular locality.

It is forcibly argued that it is beyond the power of Congress to pass a law of the character in question solely for the District of Columbia, because whenever Congress acts upon the subject the regulations it establishes must constitute a system applicable to the whole country; but the disposition of this case calls for no expression of opinion upon that point.

[149] In our judgment Congress for the reasons given could not have delegated the power to enact the third clause of the 21st section of the Act of Assembly, construed to include business agents such as Hennick, and there is nothing in this record to justify the assumption that it endeavored to do so, for the powers granted to the District were municipal merely, and although by several Acts, Congress repealed or modified parts of this particular by-law, these parts were separably operative, and such as were within the scope of municipal action, so that this congressional legislation cannot be resorted to as ratifying the objectionable clause, irrespective of the inability to ratify that which could not originally have been authorized.

The judgment of the Supreme Court of the District is affirmed.

Mr. Justice **Miller** dissenting:

I do not find myself able to agree with the court in its judgment in this case.

The Act of Congress creating a Territorial Government for the District of Columbia declared that the legislative power of the District should "extend to all rightful subjects of legislation within said District;" which undoubtedly was intended to authorize the District to exercise the usual municipal powers. The Act of the Legislative Assembly of the District, under which Hennick was convicted, imposed "a license on trades, business, and professions practiced or carried on in the District of Columbia," and a penalty on all persons engaging in such trades, business, or professions without obtaining that license. As the court says in its opinion, this was "manifestly regarded as a regulation of a purely municipal character."

The taxing of persons engaged in the business of selling by sample, commonly called drummers, is one of this class, and the only thing urged against the validity of this law is that it is a regulation of interstate commerce, and, therefore, an exercise of a power which rests exclusively in Congress. I pass the question, which is a very important one, whether this Act of the Legislature of the District of Columbia, being one exercised under the power conferred on it by Congress, and coming, as [150] I think, strictly within the limit of the power thus conferred, is not, so far as this question is concerned, sustained by the authority of Congress itself, and is substantially the action of that body.

The cases of *Robbins* v. *Shelby County Taxing Dist.* 120 U. S. 489 [30:694] and *Asher* v. *Texas*, 128 U. S. 129 [*ante*, 368], hold the regulations requiring drummers to be licensed to the regulations of commerce, and invasions of the power conferred upon Congress on that subject by the Constitution of the United States. In those cases I concurred in the judgment, because, as applied to commerce between citizens of one State and those of another State, it was a regulation of interstate commerce; or, in the language of the Constitution, of commerce "among the several States," being a prosecution of a citizen of a State other than Tennessee, in the first case, for selling goods without a license to citizens of Tennessee, and in the other case to citizens of Texas.

But the constitutional provision is not that Congress shall have power to regulate *all* commerce. It has been repeatedly held that there is a commerce entirely within a State, and among its own citizens, which Congress has no power to regulate. The language of the constitutional provision points out three distinct classes of cases in which Congress may regulate commerce, and no others. The language is that "Congress shall have power . . . to regulate commerce with foreign Nations, and among the several States, and with the Indian Tribes."

Unless the act for which Hennick was prosecuted in this case was commerce with a foreign Nation, among the several States, or with an Indian Tribe, it is not an act over which the

Congress of the United States had any exclusive power of regulation. Commerce among the several States, as was early held by this court in *Gibbons* v. *Ogden*, 19 U. S. 6 Wheat. 448 [5: 302], means commerce between citizens of the several States, and had no reference to transactions by a State, as such, with another State, in their corporate or public capacities. Indeed, it would be of very little value if that was the limitation or the meaning to be placed
151] upon it. I take it for granted, therefore, that its practical utility is in the power to regulate commerce between the citizens of the different States.

Commerce between a citizen of Baltimore, which Hennick is alleged to be in the prosecution in this case, and citizens of Washington, or of the District of Columbia, is not commerce "among the several States," and is not commerce between citizens of different States, in any sense. Commerce by a citizen of one State, in order to come within the constitutional provision, must be commerce with a citizen of another *State;* and where one of the parties is a citizen of a Territory, or of the District of Columbia, or of any other place out of a State of the Union, it is not commerce among the citizens of the several States.

As the license law under which Hennick was prosecuted made it necessary for him to take out a license to do his business in the City of Washington, or the District of Columbia, which was not a State, nor a foreign Nation, nor within the domain of an Indian Tribe, the Act upon the subject does not infringe the Constitution of the United States.

For these reasons I dissent from the judgment of the court.

---

[52] WILLIAM BALDWIN, *Plff. in Errr.*,
v.
THE STATE OF KANSAS.

(See S. C. Reporter's ed. 52-57.)

Indictment for murder—oath to jury—when objection cannot be considered—state decision, when conclusive—federal questions.

1. Where, on a trial of an indictment for murder, the record states that the jurors were sworn "to well and truly try the issues joined," *held:* that that is not to be regarded as a statement of the oath actually administered; and where the journal entry states that the jurors were "duly" sworn, *held:* that such statement is consistent with the fact that the oath required by a statute was, in form, duly administered.

2. Where, at the trial before a jury, no objection was made to the form of the oath, nor on making the motion for a new trial, nor on the motion for arrest of judgment, and such objection was first suggested in the State Supreme Court, and that court refused to consider the objection on the ground that it was not taken at the trial, this court cannot for that reason, consider it.

3. If the right was not set up or claimed in the proper court below, the judgment of the highest court of the State in the action is conclusive so far as a right of review here is concerned.

4. The question whether the evidence in the case was sufficient to justify the verdict of a jury, and the question whether the Constitution of the State was complied with or not in the proceedings on the trial, are not federal questions which this court can review.

[No. 1154.]

Argued Dec. 17, 1888. Decided Jan. 14, 1889.

IN ERROR to the Supreme Court of the State of Kansas, to review a judgment of that Court affirming the judgment of the State District Court that the plaintiff in error be confined in the penitentiary until the Governor of the State should direct his execution for the crime of murder. *Dismissed.*

The facts are stated in the opinion.

Messrs. **B. P. Waggener** and **W. D. Webb,** for plaintiff in error:

The Statutes of Kansas provide that "The jury shall be sworn to well and truly try the matters submitted to them in the case in hearing, and a true verdict give according to the law and the evidence." The records and the bill of exceptions show that the jury "were sworn well and truly to try the issue joined," "that there was no other form of oath administered;" the oath administered to the jury was, in effect, no oath.

Hunnell v. *State*, 86 Ind. 431; *Dixon* v. *State*, 4 G. Greene (Iowa) 381; *Warren* v. *State*, 1 G. Greene (Iowa) 106; *Harriman* v. *State*, 2 G. Greene (Iowa) 285; *Maher* v. *State*, 3 Minn. 447; *State* v. *Rollins*, 22 N. H. (2 Foster) 533; *Seer* v. *State*, 2 Tex. App. 495; *Holland* v. *State*, 14 Tex. App. 182; *Johnson* v. *State*, 47 Ala. 30, 31; *Bugg* v. *State*, Id. 50; *Johnson* v. *State*, Id. 62; *Lewis* v. *State*, 51 Ala. 5; *Smith* v. *State*, 53 Ala. 486; *Davis* v. *State*, 54 Ala. 88; *Commander* v. *State*, 60 Ala. 6; *Perkins* v. *State*, Id. 7; *Schamberger* v. *State*, 68 Ala. 543; *Allen* v. *State*, 71 Ala. 6; *Storey* v. *State*, Id. 330; *Johnson* v. *State*, 74 Ala. 537; *State* v. *Baldwin*, 36 Kan. 7; *Sandford* v. *State* (6 Eng.) 11 Ark. 328; *Patterson* v. *State*, 7 Ark. 59; *Burrow* v. *State*, 12 Ark. 67; *Bell* v. *State*, 10 Ark. 536; *Bivens* v. *State*, 11 Ark. 455; *Harper* v. *State*, 25 Ark. 83; *Lawson* v. *State*, Id. 106; *Baker* v. *State*, 39 Ark. 180; *Barbour* v. *State*, 37 Ark. 61; *Roberts* v. *Smith*, Morris (Iowa) 417; *State* v. *Angelo*, 18 Nev. 429.

When an improper oath thus appears to have been administered, it is error fatal to the proceedings.

Martin v. *State*, 40 Tex. 19, 26; *Everett* v. *State*, 4 Tex. App. 159; *Kennon* v. *State*, 7 Tex. App. 326; *Dresch* v. *State*, 14 Tex. App. 175; *Nels* v. *State*, 2 Tex. 280; *Baird* v. *State*, 38 Tex. 600; *Bawcom* v. *State*, 41 Tex. 189; *Edmondson* v. *State*, Id. 501; *Minich* v. *People*, 8 Colo. 450, 451.

"Due process of law" means law in its regular course of administration, according to prescribed forms and in accordance with the general rules for the protection of individual rights.

State v. *Whisner*, 35 Kan. 271; *Hurtado* v. *Cal.* 110 U. S. 516 (28: 232); *Ex Parte Va.* 100 U. S. 346-347 (25:679).

Mr. **S. B. Bradford,** *Atty-Gen.* of the State of Kansas, for defendant in error:

No exception was taken to the form of the oath, at the time it was administered or at the time of making the motion for a new trial, or the motion for arrest of judgment in the trial court.

Proffatt, Jury Trial, p. 258, § 203.

Exception to the form of oath must be taken at the time of the trial.

Candler v. *Hammond*, 23 Ga. 493; *Wrocklage* v. *State*, 1 Iowa, 167; *Roose* v. *State*, 10 Ohio St. 575; *Bartlett* v. *State*, 28 Ohio St. 672; *Dyson*

v. *State*, 26 Miss. 879, 880, 881; *Orist* v. *State*, 21 Ala. 149.

[53] *Mr. Justice* **Blatchford** delivered the opinion of the court:

This is a writ of error to the Supreme Court of the State of Kansas. William Baldwin was proceeded against, in the District Court of the Second Judicial District of Kansas, sitting in and for Atchison County, by an information charging him with the crime of murder. On a trial before a jury, he was found guilty. A motion for a new trial was denied; and the [54] judgment of the court was rendered that he be confined at hard labor, in the penitentiary of the State, for one year, from January 11, 1886, and until the Governor of the State should by order direct his execution, at which time, as specified in such order, not less than one year from that date, he should be hung. He removed the case by appeal to the Supreme Court of the State, and it affirmed the judgment in December, 1886. An application for a rehearing was denied in July, 1887. The case is brought here by him. The decision of the Supreme Court of Kansas is reported as *State* v. *Baldwin*, 36 Kan. 1.

The errors assigned here are: (1) that the jurors were not sworn according to the form of oath prescribed by the Statute of Kansas, and that, therefore, the jury was not a legally constituted tribunal, and so the defendant will, under the judgment of the court, be deprived of his life, without due process of law, and be denied the equal protection of the law; (2) that the evidence on which the judgment was founded was so inadequate to show that the defendant was guilty of the crime of murder, that the judgment amounts to a denial to the defendant of the equal protection of the law.

As to the question of the oath administered to the jurors, the journal entry at the trial states that, issue being joined upon a plea of not guilty, there came a jury of twelve good and lawful men, whose names are given, "having the qualifications of jurors, who being duly elected, tried, and sworn well and truly to try the issue joined herein," the trial proceeded. The bill of exceptions states that "a jury was impaneled and sworn to well and truly try the issues joined herein."

The Statute of the State of Kansas provides (Compiled Laws of Kansas, chap. 82, art. 11, § 208; chap. 80, art. 15, § 274) that "The jury shall be sworn to well and truly try the matters submitted to them in the case in hearing, and a true verdict give, according to the law and the evidence." The statute does not give in words the form of the oath. It is contended that the record affirmatively shows that the oath required by the Statute of Kansas was not administered to [55] the jurors, but that they were only sworn "well and truly to try the issue joined herein," or "to well and truly try the issues joined herein."

The record does not purport to give *ipsissimis verbis* the form of the oath administered to the jurors. The statement of the oath is entirely consistent with the fact that the oath required by the Statute of Kansas was administered, especially in view of the statement in the journal entry that the jurors were "duly" sworn. On this subject, the Supreme Court of Kansas says correctly, in its opinion: "It is highly important and necessary that the oath should be administered with due solemnity, in the presence of the prisoner, and before the court, substantially in the manner prescribed by law. It may also be conceded that the record should show that the jury were sworn, and, when the record does purport to set out in full the form of the oath upon which the verdict is based, it must be in substantial compliance with law; otherwise, the conviction cannot stand. The assumption by counsel, that the oath as actually administered is set out in full in the record, it seems to us is unwarranted. What is stated in the record is but a recital by the clerk of the fact that the jury were sworn. The swearing was, of course, done orally, in open court; and it is no part of the duty of the clerk to place on the record the exact formulary of words in which the oath was couched. He has performed the duty in that respect when he enters the fact that the jury were duly sworn; and when that is done the presumption will be that the oath was correctly administered. The method of examining the jurors as to their qualifications, or whether the oath was taken by them while standing with uplifted hands, according to the universal practice in the State, or otherwise, is not stated. In making mention of the impaneling and swearing of the jury, there is no description of the parties between whom the jury are to decide; nor, indeed, are there any of the formal parts of an oath stated. The statement made is only a recital of a past occurrence; and it is manifest that there was no intention or attempt of the clerk to give a detailed account of the manner of impaneling the jury, or to set out the oath *in hæc verba*. It may be observed that in the form of the verdict returned, and which was prepared and presented to the jury by the [56] trial judge, it was stated that the jury were duly impaneled and sworn."

The form of the verdict thus referred to was in these words: "We, the jury duly impaneled, charged and sworn, in the above entitled action, do, on our oath, find the defendant, William Baldwin, guilty of murder in the first degree, as charged in the first count of information."

The Supreme Court of Kansas held that the recitals in the record relative to the swearing of the jury were not to be regarded as an attempt to set out the oath actually administered, but rather as a statement of the fact that the jury had been sworn and acted under oath. We concur in this view.

That court went on to say: "A still more conclusive answer on this point is that no objection was made to the form of the oath when it was administered, or at any other time prior to its presentation in this court. If there was any irregularity in this respect, it should and probably would have been objected to at the time it occurred. It is quite unlikely that there was any departure from the form of the oath so well understood, and which is in universal use in all of the courts of the State; but, if the form of the oath was defective, the attention of the court should have been called to it at the time the oath was taken, so that it might have been corrected. A party cannot sit silently by and take the chances of acquittal, and subsequently, when convicted, make objections to

an irregularity in the form of the oath. Not only must the objection be made when the irregularity is committed, but the form in which the oath was taken, as well as the objection, should be incorporated into the bill of exceptions, in order that this court may see whether or not it is sufficient. This was not done."

This statement of the condition of the record shows that no federal question is presented, in regard to the oath administered to the jurors, of which this court can take jurisdiction. Section 709 of the Revised Statutes provides that a final judgment in any suit in the highest court of a State, in which a decision in the suit could be had, where any title, right, privilege, or immunity is claimed under the Constitution, and the decision is against the title, 57] right, privilege, or immunity "specially set up or claimed" by either party, under such Constitution, may be re-examined, and reversed or affirmed, in the supreme court, upon a writ of error. In the present case, the record does not show that, at the trial before the jury, any title, right, privilege, or immunity under the Constitution of the United States was specially set up or claimed. No objection was taken to the form of the oath at the trial, nor at the making of the motion for a new trial before the trial court, nor at the making of the motion for arrest of judgment in that court. The point was first suggested in the supreme court of the State. That court, as it appears, refused to consider the objection, on the ground that it was not taken at the trial. For that reason, we, also, cannot consider it.

In *Spies* v. *Illinois*, 123 U. S. 131, 181 [31:80, 91], this court said in regard to a question of this kind: "As the Supreme Court of the State was reviewing the decision of the trial court, it must appear that the claim was made in that court, because the supreme court was only authorized to review the judgment for errors committed there, and we can do no more." "Again, "If the right was not set up or claimed in the proper court below, the judgment of the highest court of the State in the action is conclusive, so far as the right of review here is concerned."

The question whether the evidence in the case was sufficient to justify the verdict of the jury, and the question whether the Constitution of the State of Kansas was complied with or not in the proceedings on the trial which are challenged, are not federal questions which this court can review.

The writ of error is dismissed for want of jurisdiction.

Mr. Justice **Harlan**, dissenting, said:

I adhere to the opinion expressed by me in *Hurtado* v. *California*, 110 U. S. 539 [28: 239], that a State cannot, consistently with due process of law, require a person to answer for a capital offense, except upon due presentment or indictment by a grand jury. Upon that ground I dissent from the judgment in this case.

CHARLES PROBST, *Plff. in Err.*, [182]

v.

THE TRUSTEES OF THE BOARD OF DOMESTIC MISSIONS OF THE GENERAL ASSEMBLY OF THE PRESBYTERIAN CHURCH IN THE UNITED STATES OF AMERICA.

(See S. C. Reporter's ed. 182-192.)

Law of New Mexico—lost writing—limitations.

1. Under section 2768, chap. 2, title 40, Compiled Laws of the Territory of New Mexico, evidence must be given that the writing, therein named, is lost or not in the hands of the party wishing to use it, before the record of the same or a transcript thereof may be read in evidence.

2. Under the Statute of New Mexico on the subject of limitations, adverse possession by defendant under claim of title of the lands sued for, for ten years prior to the commencement of an action of ejectment therefor, is a good defense in such action.

[No. 113.]

Argued Dec. 7, 1888. Decided Jan. 21, 1889.

IN ERROR to the Supreme Court of the Territory of New Mexico, to review a judgment of that court in favor of plaintiffs in an action of ejectment. *Reversed.*

The facts are stated in the opinion.

Messrs. **O. D. Barrett** and **F. W. Clancy**, for plaintiff in error:

The records of deeds which the plaintiffs below were allowed to introduce in evidence could be admissible only by virtue of statutory authority.

It is essential that it be shown that the deed is lost, or that it is not in the hands of the party desiring to use it.

1 Halsted, Ev. 153 *et seq.*; 2 Best, Ev. § 482, and cases cited; 1 Greenl. Ev. § 558; *Tayloe* v. *Riggs*, 26 U. S. 1 Pet. 596 (7: 275); *De Lane* v. *Moore*, 55 U. S. 14 How. 263 (14: 409); *Simpson* v. *Dall*, 70 U. S. 3 Wall. 474-5 (18: 266, 267); *Brooks* v. *Marbury*, 24 U. S. 11 Wheat. 82 (6: 423).

The defense of the Statute of Limitations is not to be regarded with disfavor, nor practically nullified by the instructions of the court.

Angell, Lim. § 380 *et seq.*; *Lewis* v. *Marshall*, 30 U. S. 5 Pet. 477 (8: 195); *Clementson* v. *Williams*, 12 U. S. 8 Cranch. 74 (3: 491); *Bell* v. *Morrison*, 26 U. S. 1 Pet. 360 (7: 174); *McCluny* v. *Silliman*, 28 U. S. 3 Pet. 278 (7: 676).

Mr. **Jno. E. Parsons**, for defendants in error:

The papers establishing the corporate character of the board were properly received in evidence.

Society for the Propagation of the Gospel v. *Pawlet*, 29 U. S. 4 Pet. 480, 502 (7: 927); *Kanawha Coal Co.* v. *Kanawha & O. Coal Co.* 7 Blatchf. 391.

When a statute imposes a duty and prescribes a penalty, it is that penalty, and not the further one of excluding the offending party from the courts, which is to be inflicted in case the duty is neglected.

Phila. W. & B. R. Co. v. *Phila. & H. de G. Steam Towboat Co.* 64 U. S. 23 How. 209, 218 (16: 433, 436); *Northwestern Mut. L. Ins. Co.* v. *Overholt*, 4 Dill. 287; *Utley* v. *Clark-Gardner Lode Min. Co.* 4 Colo. 369.

It was not error for the court to permit the board to prove that deeds purporting to convey

the *locus in quo* to its predecessors in title appeared on record in the Recorder's Office of Sante Fe County.

Smith v. *Lorillard*, 10 Johns. 339, 356; *Burt* v. *Panjaud*, 99 U. S. 180 (25: 451); *Christy* v. *Scott*, 55 U. S. 14 How. 282, 292 (14: 422); *Jackson* v. *Wheat*, 18 Johns. 40; *Jackson* v. *Newton*, Id. 355; *Greenleaf* v. *Birth*, 30 U. S. 5 Pet. 132 (8:72); *First Unitarian Society* v. *Faulkner*, 91 U. S. 415 (23: 283); *Decatur First Nat. Bank* v. *St. Louis Home Sav. Bank*, 88 U. S. 21 Wall. 294 (22: 560); *Pillow* v. *Roberts*, 54 U. S. 13 How. 472, 477 (14: 228); *Jackson* v. *Van Dusen*, 5 Johns. 144; *Dodge* v. *Freedmans Sav. & Trust Co.* 93 U. S. 379 (23: 920).

A general exception will not be entertained by appellate tribunals.

Cooper v. *Schlesinger*, 111 U. S. 148 (28: 382). *Hoyt* v. *L. I. R. Co.* 57 N. Y. 678; *Aryault* v. *Pacific Bank*, 47 N. Y. 570.

Mere possession does not start the statute, or, if continued, constitute title. There must be some claim of title.

Harvey v. *Tyler*, 69 U. S. 2 Wall. 328, 343 (17: 871, 874).

A mere trespass not amounting to a disseisin does not set the statute in motion. The entry must be hostile, clearly defined, exclusive, uninterrupted and under claim of title real or pretended.

3 Washb. Real Prop. p. 146, 5th ed.

A deed of one parcel of land is no foundation for a claim of title upon which to support adverse possession of another.

Pope v. *Hanmer*, 74 N. Y. 240; *Woods* v. *Banks*, 14 N. H. 111; *Jackson* v. *Loyd*, cited in *Jackson* v. *Woodruff*, 1 Cow. 276, 286; 3 Washb. Real Prop. 167, 5th ed.

Mr. Justice **Miller** delivered the opinion of the court:

This is a writ of error to the Supreme Court of the Territory of New Mexico.

The action was an ejectment brought by the [186] defendants in error, the Trustees of Board of Domestic Missions of the General Assembly of the Presbyterian Church in the United States of America, against Charles Probst, to recover the possession of certain land. The plaintiffs below recovered a judgment against the defendant, which was affirmed in the supreme court of the Territory; and this writ of error is brought by the defendant, Probst, to reverse that judgment.

The case was tried before a jury. The plaintiff failed to introduce any evidence of transfer of title from the government to any person, but relied upon the possession of the property by certain parties from about the year 1846 up to the bringing of this suit, and upon conveyances by those parties in such a manner that their right is thereby vested in the plaintiffs in the action. The defendant, Probst, relied mainly upon the Statute of Limitations as his affirmative defense.

Two questions are presented in this court for [187] consideration. The first of these arises upon the introduction by the plaintiffs of copies of certain deeds, duly recorded, from the parties under whom they claim title, down to plaintiffs. These copies were objected to, because no sufficient reason was shown why the originals should not have been produced, and none was shown, except that the last deed, which was claimed to vest the title in the plaintiffs, made by one McFarland, was probably in the possession of the officers of the corporation at its offices in the City of New York.

The Statute of New Mexico on this subject is as follows:

"Sec. 2768. When said writing is certified and registered in the manner hereinbefore prescribed, and it be proven to the court that said writing is lost, or that it is not in the hands of the party wishing to use it, then the record of the same, or a transcript of said record, certified to by the recorder under his seal of office, may be read as evidence without further proof." chap. II, title XL, Compiled Laws.

There was no attempt to prove that any of these deeds were lost, nor that any search had been made for them, nor any effort made to procure them. As regards those which were prior to the deed from McFarland to the Board of Trustees it may be conceded that the presumption was that they were in the control and possession of the parties to whom they belonged and the introduction of copies from the record might be sustained on this presumption. But as regards the deed from McFarland to the board, who were the plaintiffs, no such presumption can be made. All that was proved about that deed, its custody, possession or location, was that it was not in the hands of the agent of the board in New Mexico. Naturally it would be in the possession of the New York office. No attempt was made to show that the trustees had made any search for it, or that any effort had been made to have it sent to the place of trial in this case, and it seemed to be supposed to be quite sufficient to authorize the introduction of the copy of the record to show that the deed, though in the possession of the plaintiff corporation at its proper place at its office, was not in the Territory of New Mexico, and not in the possession of the agent of the board there.

No member of this court sitting on the trial [188] of a case would admit this to be a sufficient showing under the statute of New Mexico that the writing was lost, or was not in the hands of the party offering it in evidence. But it may be conceded that a very large amount of discretion must be reposed in the trial court to whom such copy of a record is presented, in ruling upon the circumstances which shall determine its admission or rejection; and it is possible that, if there were no other objection to the proceedings at the trial than this one, this court would not reverse the judgment on that account, but it is certainly not good practice, nor an exercise of the discretion of the court to be commended.

The other objection, we think, is fatal; and that is to the instruction of the court in regard to the Statute of Limitations.

An examination of the testimony shows that there was evidence tending to prove that the defendant, Probst, was in the exclusive possession of the land in controversy from a period variously stated to be from 1869, 1870 and 1871, onward up to the time of the trial. The action was commenced on the 16th day of July, 1881. The Statute of New Mexico on the subject of limitations is found in the following section of the Compiled Laws:

"Sec. 1881. No person or persons, nor their children or heirs, shall have, sue, or maintain any action or suit, either in law or equity, for any lands, tenements or hereditaments but within ten years next after his, her or their right to commence, have, or maintain such suit shall have come, fallen or accrued, and that all suits either in law or equity for the recovery of lands, tenements or hereditaments shall be had and sued within ten years next after the title or cause of action or suit accrued or fallen, and at no time after the ten years shall have passed."

If, therefore, Probst was in possession on the day this suit was brought, and had been for ten years prior thereto, no reason can be seen why that fact did not constitute a statutory bar to the action. It may be conceded that there is contradictory testimony on this subject, but it is very certain that several witnesses swear that he was in possession of the property prior to the year 1871, and that he had remained in such possession up to the time of the trial. [189] The court, in its treatment of that subject, seems to have gone upon the ground that Probst's possession did him no good, and could constitute no defense, unless he had some kind of a title to the land connected with it, and manifestly left upon the jury the impression that this must be a title evidenced by writing. Among other things, the court instructed the jury as follows:

"The plaintiff claims title by purchase, evidenced by deeds, and not by simple possession; and I instruct you that if you believe from the evidence in this case that plaintiff did purchase this ground from persons who were legally entitled to sell the same, and took proper deeds therefor, and recorded said deeds in the proper office in the county where such lands were situated, that such record was notice to all the world of legal ownership, and that such land could not thereafter be taken up as vacant or abandoned lands; that even actual possession of such lands by the defendant for a period of ten years, if taken after such deeds were recorded, would not give him any legal title to them, but he would be as much a trespasser at the end of ten years as he was upon the day of his entry. If his entry was wrong no length of time could make it right, but if you also find that plaintiff, by its agents, demanded possession and asserted its title, and brought its claim to the land distinctly to defendant's knowledge, it destroys all claims which he sets up to continuous and uninterrupted possession; and if you also find that plaintiff resided upon and actually cultivated and possessed a portion of the land purchased by it, you are instructed that such possession extends to the boundaries described in such deeds of purchase.

"The defendant has informed you by his counsel that he claims this land not by purchase, but because he has been in possession of it for over ten years. I instruct you that unless he had a right to the possession of such lands when he took possession of them he has no right now; time never makes a wrong right.

"If you find from the evidence that this plaintiff, by its agents, was actually residing upon the land purchased by it, and held by recorded deeds when this defendant entered upon [190] said lands and wrongfully took possession of a portion of said lands, you must find for plaintiff, although you also find that defendant has held said lands for more than ten years adversely to plaintiff."

Obviously the proposition here set out by the court is, that if plaintiff had the real title to the land, and the evidence of it was on record, nobody could, by taking possession and holding it adversely for the period allowed by the statute, defeat such a title. The language used by the court is: "Unless the defendant had a *right* to the possession of such lands when he took possession of them he has no right now; time never makes a wrong right."

It is the essence of the Statute of Limitations that whether the party had a right to the possession or not, if he entered under the claim of such right and remained in the possession for the period of ten years, or other period prescribed by the statute, the right of action of the plaintiff who had the better right is barred by that adverse possession. This right given by the Statute of Limitations does not depend upon, and has no necessary connection with, the validity of the claim under which that possession is held. Otherwise there could be no use for adverse possession as a defense to an action, for if the decision is made to depend upon the validity of the respective titles set up by the plaintiff and the defendant there can be no place for the consideration of the question of possession. It is because the plaintiff has the better title that the defendant is permitted to rely upon such uninterrupted possession adverse to the plaintiff's title as the statute prescribes, it being well understood, and an element in such cases, that the plaintiff does have the better title, but though he has it that he has lost his right by delay in asserting it.

Nor is it necessary that the defendant shall have a paper title under which he claims possession. It is sufficient that he asserts ownership of the land, and that this assertion is accompanied by an uninterrupted possession. It is this which constitutes adverse possession, claiming himself to be the owner of the land. This is a claim adverse to everybody else, and the possession is adverse when it is held under this claim of ownership, whether that ownership depends upon a written instrument, inheritance, a deed, or even an instrument which may not convey all the lands in controversy. [191] If defendant asserts his right to own the land in dispute, asserts his right to the possession, and his possession is adverse and uninterrupted, it constitutes a bar which the statute intended to give to the defendant.

The instructions of the court are utterly at variance with this doctrine. They do away with the value of adverse possession as a defense to an action of ejectment. They say in effect that unless the defendant was in the right when he took possession, the length of its continuance does not afford him any ground for a defense; whereas, it is obviously the nature and purport of the defense established by the Statute of Limitations that the defendant may not have been in the right, but this long actual possession estops the plaintiff from putting the defendant to the proof of the right.

The court not only erred upon this subject in the positive instructions which it gave to the jury, but also in refusing to charge as follows, at the request of the defendant:

"That an uninterrupted occupancy of land by a person who has in fact no title thereto, for the period of ten years adversely to the true owner, operates to extinguish the title of the true owner thereto and vests the right to the premises absolutely in the occupier."

In *Ewing* v. *Burnet*, 36 U. S. 11 Pet. 41, 52 [9:624] this court said upon this subject:

"An entry by one man on the land of another is an ouster of the legal possession arising from the title, or not, according to the intention with which it is done; if made under claim and color of right, it is an ouster; otherwise, it is a mere trespass; in legal language the intention guides the entry and fixes its character."

We think this is a correct statement of the doctrine of adverse possession. It is implied by the language of the court in *Harvey* v. *Tyler*, 69 U. S. 2 Wall. 328, 349 [17: 871, 876], that "Any one in possession, with no claim to the land whatever, must in presumption of law be in possession in amity with and in subservience [192] to that title." And the instruction of the court below in that case was approved, that if "any of the defendants entered upon and took possession of the land, without title or claim, or color of title, such occupancy was not adverse to the title of plaintiffs, but subservient thereto."

The fair implication in both of these cases is that where possession is taken under claim of title it sufficiently shows the intention of the party to hold adversely within the meaning of the law upon that subject. There is no case to be found which holds that this adverse claim of title must be found in some written instrument.

In the case of *Bradstreet* v. *Huntington*, 30 U. S. 5 Pet. 402, 439 [8: 170], this court said:

"The whole of this doctrine is summed up in very few words as laid down by Lord Coke (1 Inst. 153), and recognized in terms in the case of *Blunden* v. *Baugh*, 3 Croke, 302, in which it underwent very great consideration. Lord Coke says: 'A disseisin is when one enters *intending* to usurp the possession, and to oust another of his freehold; and therefore *querendum est à judice quo animo hoc fecerit*, why he entered and intruded.' So the whole inquiry is reduced to the fact of entering, and the intention to usurp possession."

The judgment is reversed and the cause remanded, with a direction to award a new trial.

---

[192] JAMES M. SEIBERT, Collector of CAPE GIRARDEAU COUNTY (MO.), *Plff. in Errr.*,

v.

UNITED STATES, *ex rel.* GEORGE W. HARSHMAN.

(See S. C. Reporter's ed. 192, 193.)

The facts of this case are similar to those in *Seibert* v. *Lewis*, 122 U. S. 284 (30:1161), and the court adheres to the decision there announced, which controls this case.

[No. 130.]

Submitted Dec. 18, 1888. Decided Jan. 21, 1889.

IN ERROR to the Circuit Court of the United States for the Eastern District of Missouri, to review a judgment sustaining demurrer and ordering a peremptory writ of *mandamus* to the Collector of Cape Girardeau County, Missouri, plaintiff in error, commanding him to collect a tax to pay a judgment against said County. *Judgment affirmed.*

Messrs. **E. John Ellis, John Johns** and **D. A. McKnight,** for plaintiff in error.

Mr. **Clinton Rowell,** for defendant in error.

Mr. Justice **Field** delivered the opinion of the court:

The facts of this case are similar to those in [193] *Seibert* v. *Lewis*, before the court at its October Term, 1886, 122 U. S. 284 [30:1161], and it is admitted by the counsel for the plaintiff in error that the decision there, if adhered to, will control here. He, however, asks us to reconsider our rulings and reverse our former judgment. We see no reason to justify such reconsideration and change of position. The very elaborate argument of counsel is but a representation of the reasons originally offered against the decision in that and analogous cases. *Seibert* v. *Lewis* was very carefully and elaborately considered, and to the doctrines there announced we adhere. Upon its authority *the judgment of the court below must be affirmed;* and it is so ordered.

THE BATE REFRIGERATING COMPANY, *Appt.*, [151]

v.

GEORGE H. HAMMOND AND COMPANY.

(See S. C. Reporter's ed. 151-170.)

Letters patent, how long in force—when duration controlled by foreign patent for same invention—evidence—Canadian patent—limitation on face of patent not necessary—how shown—validity.

1. Under the Act of 1870, and section 4887 of the Revised Statutes, a United States patent does not expire so long as the foreign patent for the same invention continues to exist, but continues in force, though not longer than seventeen years from its date, so long as the foreign patent continues.

2. Under section 4887, although, in the case provided for by it, the United States patent may on its face run for seventeen years from its date, it is to be so limited by the courts, as a matter to be adjudicated on evidence *in pais*, as to expire at the same time with the foreign patent, not running in any case more than seventeen years; but, subject to the latter limitation, it is to be in force as long as the foreign patent is in force.

3. Where the application for a United States patent was made December 1, 1876, and the patent thereon was granted November 20, 1877 and a Canadian patent was granted for the same invention January 9, 1877 for five years and was extended under the Canadian Statute for two further periods of five years each, and such extensions were a matter of right, at the option of the patentee, and the fifteen years' terms of the Canadian patent have been continuous and without interruption, the United States patent does not expire before the end of the fifteen years' duration of the Canadian patent.

4. It is not necessary that the United States patent should, on its face, be limited in duration to the duration of the foreign patent.

5. The expiration of the foreign patent may be shown by the record of the foreign patent or other proper evidence; or by giving evidence of the extensions of the foreign patent, thus showing the time when, by virtue of such extensions, the United States patent will expire.

6. While it may be proper, in a case where the date of a foreign patent, issued prior to the granting of a United States patent to the same patentee for the same invention, is made known to the Patent Office prior to the granting of the United State patent, to insert in that patent a statement of the limitation of its duration, in accordance with the

duration of the foreign patent, it does not affect the validity of the United States patent if such limitation is not contained on its face.

[No. 862.]

Argued Jan. 2, 3, 4, 1889. Decided Jan. 21, 1889.

APPEAL from a decree of the Circuit Court of the United States for the district of Massachusetts, dismissing a suit in equity brought by the appellant for the infringement of letters patent No. 197,314, granted to John Bate November 20, 1877, for the term of seventeen years from that day on an application filed December 1, 1876, for an improvement in the processes for preserving meats. *Reversed.*

The facts are stated in the opinion.

Messrs. **Wm. M. Evarts,** *Richard N. Dyer, Paul H. Bate, John Lowell* and **C. A. Seward,** for appellant:

The correct construction of section 4887 of the United States Revised Statutes is not clear.

Bate Refrigerating Co. v. *Gillett*, 31 Fed. Rep. 814; *Gramme Electrical Co.* v. *Arnoux & H. Electric Co.* 17 Fed. Rep. 840; *Andrews* v. *Hovey*, 124 U. S. 716 (31: 563).

The date of the application has been judicially decided to be *prima facie* the date of the invention.

Wing v. *Richardson*, 2 Fish. Pat. Cas. 536; *Jones* v. *Sewall*, 6 Fish. Pat. Cas. 358; *Dane* v. *Chicago Mfg. Co.* 2 Pat. Off. Gaz. 677; *Packard* v. *Sandford*, 16 Pat. Off. Gaz. 1182; *Allen* v. *N. Y.* 17 Pat. Off. Gaz. 1281.

The Act of 1870 was a revision of all previous laws relating to patents and declared that the American patent should expire at the same time with the foreign patent.

Siemen v. *Sellers*, 123 U. S. 284 (31: 155); *O'Reilly* v. *Morse*, 56 U. S. 15 How. 62 (14: 601).

The contemporaneous construction of section 4887 by the profession and the Patent Office was in accordance with the opinion of *Mr. Justice* Grier in *O'Reilly* v. *Morse.*

Patent Office, Rule, 1871, 1878, § 39; *U. S.* v. *Marble*, 2 Mackey, 12; *Ex parte Mann*, 17 Pat. Off. Gaz. 330.

If a literal construction of statutory language is opposed to the legislative intention, as evidenced by the full statute, such construction will not be allowed to prevail.

Caledonian R. Co. v. *North British R. Co.* L. R. 6 App. Cas. 122; *Frame* v. *Clement*, 44 L. T. N. S. 399; *Nuth* v. *Tamplin*, L. R. 8 Q. B. Div. 253; *U. S.* v. *Kirby*, 74 U. S. 7 Wall. 482 (19: 278); *Isherwood* v. *Oldknow*, 3 Maule & S. 397.

Communis opinio is evidence of what the law is.

Chesnut v. *Shane*, 16 Ohio, 607; *McKeen* v. *Delancy*, 9 U. S. 5 Cranch, 29 (3: 25); *Maher* v. *State*, 1 Port. (Ala.) 265, 26 Am. Dec. 379; *Troup* v. *Haight*, 1 Hopk. 267; *Com.* v. *Posey*, 4 Call, 109, 2 Am. Dec. 560; *Jackson* v. *Gilchrist*, 15 Johns. 89.

Long established construction of a statute, by the officers who execute it, ought to have the force of judicial determination.

U. S. v. *Hill*, 120 U. S. 183 (30: 632); *U. S.* v. *Philbrick*, 120 U. S. 59 (30: 561); *Rutherford* v. *Greene*, 15 U. S. 2 Wheat. 203 (4: 218); *Bruce* v. *Schuyler*, 9 Ill. 221, 46 Am. Dec. 447.

Change of phraseology in the revision of the statutes *in pari materia* is without legal significance.

Taylor v. *Delancy*, 2 Cai. Cas. 150; *Case of Yates*, 4 Johns. 358; *Theriat* v. *Hart*, 2 Hill, 380; *Goodell* v. *Jackson*, 20 Johns. 722; *Crosswell* v. *Crane*, 7 Barb. 195; *Myer* v. *West. Car Co.* 102 U. S. 11 (26: 60); *U. S.* v. *Bowen*, 100 U. S. 508 (25: 631); *Hughes* v. *Farrar*, 45 Maine, 72; *Burnham* v. *Stevens*, 33 N. H. 247; *Overfield* v. *Sutton*, 1 Met. (Ky.) 621; *Butterworth* v. *U. S.* 112 U. S. 58 (28: 658).

There was intention on the part of Congress to diminish by the Act of 1870 the rights of an American inventor as they previously existed.

Coryton, Patents, ed. 1855; *Reg.* v. *Watford*, 9 Q. B. 626; *U. S.* v. *Union Pac. R. Co.* 91 U. S. 72 (23: 224); *Reg.* v. *Most*, L. R. 7 Q. B. Div. 251.

An inventor's rights for all purposes of his protection accrue on the filing of his application.

Jones v. *Sewell*, 6 Fish. Pat. Cas. 356; *Adams* v. *Jones*, 1 Fish. Pat. Cas. 530; *Root* v. *Ball*, 4 McLean, 177.

Section 4887 cannot properly be construed as meaning *previously to the American patent;* to so construe it would open the door to fraud and unintended hardship.

Goodyear D. V. Co. v. *Willis*, 7 Pat. Off. Gaz. 41; *Kendrick* v. *Emmons*, 9 Pat. Off. Gaz. 201.

Patents for lands have been repeatedly treated by the courts as analogous to patents for inventions.

Phila. & T. R. Co. v. *Stimpson*, 39 U. S. 14 Pet. 459 (10: 535); *Providence Rubber Co.* v. *Goodyear*, 76 U. S. 9 Wall. 788 (19: 566); *Mowry* v. *Whitney*, 81 U. S. 14 Wall. 434 (20: 858); *Woodworth* v. *Hall*, 1 Woodb. & M. 395; *Hughes* v. *U. S.* 71 U. S. 4 Wall. 232 (18: 303); *U. S.* v. *Am. Bell Teleph. Co.* 45 Pat. Off. Gaz. 1311; *Stark* v. *Starr*, 73 U. S. 6 Wall. 417 (18: 929).

Messrs. **Benjamin F. Thurston** and **George H. Lothrop** for appellee:

The fact that the Bate Canadian patent was extended prior to its expiration in Canada for two further terms of five years respectively has no effect to extend the life of the Bate United States patent.

Henry v. *Providence Tool Co.* 14 Pat. Off. Gaz. 855; *Reissner* v. *Sharp*, 16 Blatchf. 383.

The Bate United States patent is not relieved from the operation of section 4887 in consequence of the Canadian Statute 46 Vict. chap. 19, May 25, 1883.

Liverpool Ins. Co. v. *Mass.* 77 U. S. 10 Wall. 566 (19: 1029); *Elmendorf* v. *Taylor*, 23 U. S. 10 Wheat. 152 (6: 259): *Bate Refrigerating Co.* v. *Gillett*, 31 Fed. Rep. 818.

The fact that the Bate patent was applied for in the United States prior to the application for a patent for the same invention in Canada does not relieve the patent granted in the United States subsequent to the grant of the Canadian patent from the operation of section 4887.

Dwar. Stat. 694; *Rex* v. *Stoke, Damerel*, 7 Barn. & C. 569; *Rex* v. *Ramsgate*, 6 Barn. & C. 712; *Rex* v. *Barham*, 8 Barn. & C. 104; *Notley* v. *Buck*, 8 Barn. & C. 164; *Andrews* v. *Hovey*, 123 U. S. 267 (31: 160); *Gramme Electrical Co.* v. *Arnoux & H. Electric Co.* 17 Fed. Rep. 889.

Messrs. Edmund Wetmore, Sam'l A. Duncan, Leonard E. Curtis, William Bakewell, Thomas B. Kerr, **Chauncey Smith,** *Frederick P. Fish, Thomas L. Livermore* and *R. S. Taylor,*

by leave of court, for certain parties interested in the question.

Section 4887 applies to every United States patent for an invention patented in a foreign country before the grant of the domestic patent, whether such foreign patent is granted before or after the application for the United States patent.

Endlich, Stat. § 2, p. 4.

Where the meaning of the Revised Statutes is plain, the court cannot look to the statutes which have been revised to see whether errors were committed in revising them.

U. S. v. *Bowen*, 100 U. S. 508 (25: 631); *Canan* v. *Pound Mfg. Co.* 23 Blatchf. 178; *Andrews* v. *Hovey*, 123 U. S. 267 (31: 160); *S. C.* 124 U. S. 694 (31: 557); *St. Paul Plough Works* v. *Starling*, 127 U.S. 376 (32: 251); Curtis, Pat. p. 19; Coryton, Patents, ed. 1855, p. 449; *Ex parte Boyer*, Pat. Com. Dec. 1870, p. 131; *Tucker* v. *Davis*, 2 Pat. Off. Gaz. 224; *Bell* v. *Brooks*, 19 Pat. Off. Gaz. 290.

The limitation need not be expressed on the face of the American patent.

O'Reilly v. *Morse*, 56 U. S. 15 How. 62 (14: 601); *Canan* v. *Pound Mfg. Co.* 23 Fed. Rep. 185; *Am. Paper Barrel Co.* v. *Laraway*, 28 Fed. Rep. 141; *U. S.* v. *Marble*, 2 Mackey, 12.

It is immaterial whether the American patent was applied for before the foreign patent or not. This was important under the first laws, but no such distinction exists under the Act of 1870.

Ex parte Boyer, Pat. Com. Dec. 1870, p. 131; *Gramme etc. Co.* v. *Arnoux & H. Electric Co.* 21 Blatchf. 450; *Bate Co.* v. *Gillett*, 31 Fed. Rep. 809.

Section 4887 applies to all inventors, whether citizens or aliens.

Edison Co. v. *U. S. Co.* 35 Fed. Rep. 134; Carpmael, Patent Laws, 107, 199, 288, 455.

The provision of section 4887 that the United States patent "shall be so limited as to expire at the same time with the foreign patent, or if there be more than one, at the same time with the one having the shortest term," means that it shall expire at the end of the current term of the foreign patent in existence at the date of the American grant, without regard to any subsequent extension or curtailment of that term depending upon an uncertain event.

Henry v. *Providence Tool Co.* 3 Bann. & Ard. 501; 14 Pat. Off. Gaz. 855; *Bate Refrigerating Co.* v. *Gillett*, 13 Fed. Rep. 553; *Reissner* v. *Sharp*, 16 Blatchf. 383; *Gramme Electrical Co.* v. *Arnoux & H. Electric Co.* 21 Blatchf. 450; *Paillard* v. *Bruno*, 29 Fed. Rep. 864; *Holmes Electric Protective Co.* v. *Met. Burglar Alarm Co.* 21 Fed. Rep. 458.

[152] *Mr. Justice* **Blatchford** delivered the opinion of the court:

This is a suit in equity, brought in the Circuit Court of the United States for the District of Massachusetts, December 16, 1886, by the Bate Refrigerating Company, a New York corporation, against George H. Hammond and Company, a Michigan corporation, founded on the alleged infringement of letters patent No. 197,314, granted to John J. Bate, November 20, 1877, for the term of seventeen years from that day, on an application filed December 1, 1876, for an "improvement in processes for preserving meats during transportation and storage."

The plaintiff is the assignee of the patent. The bill alleges infringement, within the District of Massachusetts and elsewhere in the United States, by the making, using, and vending of the patented process; and alleges that the defendant has been engaged in the business of shipping fresh meat from the Port of Boston to ports in Great Britain, by means of the process claimed in the patent. The claim is as follows: "The herein-described process of preserving meat during transportation and storage, by enveloping the same in a covering of fibrous or woven material, and subjecting it when thus enveloped to the continuous action of a current of air of suitably low and regulated temperature, substantially as and for the purpose set forth."

The defendant filed a plea, setting up, among other things, that, on the 9th of January, 1877, letters patent of the Dominion of Canada, No. 6938, for the same invention as that described and claimed in No. 197,314, were granted to the same John J. Bate, for the term of five years from the 9th of January, 1877; that, after No. 197,314 had expired, at the end of the [153] term of five years for which such Canadian patent was granted, the Circuit Court of the United States for the District of New Jersey, upon being advised of the grant of such Canadian patent, vacated and set aside an injunction which it had theretofore granted, by an interlocutory decree made in a suit in equity founded on No. 197,314, brought by the Bate Refrigerating Company against Benjamin W. Gillett and others; that thereafter Bate and the Bate Refrigerating Company procured the rendition of a judgment by the Superior Court for Lower Canada, declaring the Canadian patent to have been void *ab initio*, and vacating it and setting it aside; that such judgment of the Superior Court for Lower Canada being brought to the attention of the Circuit Court of the United States for the District of New Jersey, that court reinstated said injunction; and that afterwards the Superior Court for Lower Canada, in a suit brought by Sir Alexander Campbell, Minister of Justice and Attorney-General for the Dominion of Canada, against Bate and the Bate Refrigerating Company and others, adjudged that its said prior judgment had been "arrived at through the fraud to the law and collusion" of Bate, the Bate Refrigerating Company, and another person, "deceiving the Attorney-General, the advocates, and the court, employing and paying counsel on both sides, as well, seemingly, against themselves as on their apparent behalf," and revoked and annulled its said prior judgment. The plea concluded by averring that No. 197,314 expired on the 9th of January, 1882, and that the circuit court, sitting as a court of equity, had no jurisdiction to hear and determine an action in equity for the infringement of the patent.

The bill was then amended by averring that the application for the Canadian patent was not made until December 19, 1876, while the application for No. 197,314 was made December 1, 1876; and that the Canadian patent was not actually or legally issued until on or about June 26, 1878, on or about which date a model

of the invention, as required by law, was filed in the Canadian Patent Office. The amendment to the bill also set forth the two judgments of the Superior Court for Lower Canada, and averred that, by virtue of an Act of the [154] Parliament of the Dominion of Canada, assented to May 25, 1883 (46 Victoria, chap. 19), the original term of the Canadian patent was actually fifteen years, instead of five years, and it would not terminate before the 9th of January, 1892.

Subsequently the defendant filed an answer to the bill, setting up, among other defenses, want of novelty in the patented invention, but not denying that it had used the invention subsequently to the granting of the patent; and also setting up the granting of the Canadian patent for five years from January 9, 1877; that No. 197,314 was void, because it was issued for seventeen years, and its term was not limited by the commissioner of patents to five years from January 9, 1877; that the Canadian application was not made until after the application for No. 197,314 was filed; that Bate did not file a model in the Canadian Patent Office until after the grant of the Canadian patent; and that the Canadian patent was actually patented to Bate on the 9th of January, 1877, and took effect on that date, although not actually delivered to the patentee until after the filing of the model. It also sets forth the two Canadian judgments, and avers that, on the 30th of November, 1881, Bate made a petition to the Commissioner of Patents for Canada, for the extension of No. 6938, in which he averred that on the 9th of January, 1877, he "obtained a patent for the period of five years from the said date, for new and useful improvements on apparatus and process for ventilation, refrigeration," etc., and that he was the holder of that patent in trust for the Bate Refrigerating Company, and prayed that it might be extended "for another period of ten years;" that, on the filing of that petition, an extension of the patent was granted, on December 12, 1881, "for a second period of five years" from January 9, 1882; that a further extension of the patent was granted, December 13, 1881, "for a third period of five years" from January 9, 1887; that the plaintiff is thereby estopped from denying the fact that No. 6938 was legally granted, January 9, 1877, for a period of five years; that by virtue of the Act of 46 Victoria, chap. 19, the original term for which No. 6938 was granted was not fifteen years instead of five years; that said Act can have no effect on [155] the duration of No. 197,314; that, by reason of the prior patenting of the invention by Bate in Canada for five years from January 9, 1877, No. 197,314, if valid at all, expired on January 9, 1882; and that, therefore, this court, sitting in equity, has no jurisdiction to hear and determine an action for its infringement.

Without the filing of any replication to this answer, the parties entered into a written stipulation, setting forth as follows: "Whereas, the answer of the defendant corporation in this cause sets up, in addition to other defenses, that the patent on which this suit is brought, being No. 197,314, granted to John J. Bate, complainant's assignor and president, on the twentieth day of November, A. D. 1877, expired on the 9th day of January, A. D. 1882, by reason of the prior grant to said John J. Bate of a patent in the Dominion of Canada for the same invention, and prays the same benefit of said defense as if the same had been pleaded to the bill of complaint; and whereas, both parties desire to have said matter of defense argued and decided without incurring the great expense of taking testimony necessary to present for final hearing all the defenses raised in said answer: it is, therefore, stipulated and agreed by and between the parties that the defense above named shall be submitted to the court, as on plea set down for argument, upon the following agreed state of facts." The facts so agreed to were substantially as follows:

1. The patent in suit, No. 197,314, was granted to John J. Bate on November 20, 1877, and the application therefor was filed in the United States Patent Office, December 1, 1876; and said patent was assigned to complainant before this suit was brought, the said Bate being a citizen of the United States at the time of said application, and the said invention having been made and reduced to practice by him therein.

2. On December 19, 1876, said John J. Bate filed in the Patent Office of the Dominion of Canada an application for a patent for improvements in apparatus and processes for ventilation, refrigeration, etc., including therein, as one feature, the process described and claimed in said patent No. 197,314.

3. In pursuance of said application the Commissioner of Patents for the Dominion of Canada caused letters patent of the Dominion of [156] Canada, No. 6938, for the invention set forth in said application, and granting to said John J. Bate, his executors, administrators, and assigns, the exclusive right, privilege, and liberty of making, constructing, using, and vending to others to be used, the said invention, to be signed and sealed with the seal of the Patent Office on January 9, 1877, and to be registered on January 11, 1877, and that the period of said grant expressed in said patent was five years from and after January 9, 1877.

4. On January 12, 1877, said commissioner of patents called upon said John J. Bate to furnish to the Patent Office a model of his said invention, and such model was furnished by said Bate on June 26, 1878, on which day said patent No. 6938 was mailed to said John J. Bate.

5. On December 5, 1881, said John J. Bate filed a petition in the Canada Patent Office, setting forth, "that on the 9th day of January, A. D. 1877, your petitioner obtained a patent for the period of five years from the said date, for new and useful improvements on apparatus and process for ventilation, refrigeration, etc.; that he is the holder of the said patent in trust for the 'Bate Refrigerating Company,' and therefore prays that it may be extended for another period of ten years."

6. On December 12, 1881, said patent No. 6938 was extended for five years from January 9, 1882, under renewal No. 13,812, and on December 13, 1881, said patent was further extended for five years from January 9, 1887, under renewal No. 13,813, in pursuance of the above named petition.

7. On or about July 9, 1883, and June 30, 1886, the Superior Court for Lower Canada rendered two judgments affecting said Canada

patent, to the purport set forth in the plea and the answer.

The stipulation further provided, that, if the decision of the circuit court should be in favor of the plaintiff, it should have a reasonable time thereafter to file a replication to the answer, and the cause should proceed in the ordinary manner; that, if the circuit court should [157] decide the cause in favor of the defendant, a decree should be entered dismissing the bill, so that the plaintiff might take an appeal therefrom to the Supreme Court of the United States; and that, if the circuit court should decide the cause in favor of the defendant, and the Supreme Court of the United States should, on appeal, reverse that decision, the defendant should have a right to proceed in the circuit court, under its answer, as to all defenses set up therein, except the one mentioned in the stipulation, as it might have proceeded if the stipulation had not been made.

The cause was heard on the pleadings and stipulation, and the circuit court entered a decree dismissing the bill, from which decree the plaintiff has appealed to this court. The circuit court gave no opinion on the merits of the case, but in deciding it followed, as it stated, the decision of the Circuit Court of the United States for the District of New Jersey, held by *Mr. Justice* Bradley, in August, 1887, made in the case of *Bate Refrigerating Co.* v. *Gillett*, 31 Fed. Rep. 809.

The questions discussed at the bar arise under section 4887 of the Revised Statutes, which is as follows: "No person shall be debarred from receiving a patent for his invention or discovery, nor shall any patent be declared invalid, by reason of its having been first patented or caused to be patented in a foreign country, unless the same has been introduced into public use in the United States for more than two years prior to the application. But every patent granted for an invention which has been previously patented in a foreign country shall be so limited as to expire at the same time with the foreign patent, or, if there be more than one, at the same time with the one having the shortest term; and in no case shall it be in force for more than seventeen years."

Two propositions as to the construction of this section are contended for by the appellant: (1) that the words "first patented or caused to be patented in a foreign country" do not mean "first patented or caused to be patented" before the issuing, or granting, or date, of the [165] United States patent, but mean "first patented or caused to be patented" before the date of the application for the United States patent; (2) that the declaration of the section, that "Every patent granted for an invention which has been previously patented in a foreign country shall be so limited as to expire at the same time with the foreign patent, or, if there be more than one, at the same time with the one having the shortest term," does not mean that the patent so granted shall expire at the same time with the term to which the foreign patent was in fact limited at the time the United States patent was granted; but that it means that it shall expire when the foreign patent expires, without reference to the limitation of the term of such foreign patent in actual force at the time the United States patent was granted.

We do not find it necessary to consider the first of these questions, because we are of opinion that the proper construction of section 4887 upon the second question is, that the patent in the present case does not expire before January 9, 1892, the time when the Canadian patent, No. 6938, will expire.

The Canadian patent was extended for the two periods of five years each, under the provisions of section 17 of the Canadian Act assented to June 14, 1872 (35 Victoria, chap. 26), which was in force when the United States patent, No. 197,314, was applied for and granted, and which read as follows: "17. Patents of invention issued by the Patent Office shall be valid for a period of five, ten, or fifteen years, at the option of the applicant, but at or before the expiration of the said five or ten years the holder thereof may obtain an extension of the patent for another period of five years, and after those second five years may again obtain a further extension for another period of five years, not in any case to exceed a total period of fifteen years in all; and the instrument delivered by the Patent Office for such extension of time shall be in the form which may be from time to time adopted, to be attached, with reference to the patent and under the signature of the commissioner, or of any other member of the Privy Council in the case of absence of the commissioner."

This statute appears to have been strictly complied with in the present case. The Canadian patent, No. 6938, ran, on its face, for five years from January 9, 1877; and, prior to the expiration of that time, and on the 5th of December, 1881, Bate applied for its extension for ten years; and it was, before the five years expired, and on the 12th of December, 1881, extended for five years from January 9, 1882, and, on December 13, 1881, for five years from January 9, 1887. The Canadian patent, therefore, has never ceased to exist, but has been in force continuously from January 9, 1877. It was in force when No. 197,314 was issued; and it has, by virtue of a Canadian Statute, in force when the application for No. 197,314 was filed, continued to be in force at all times since the latter patent was granted. This is true, although the Canadian patent, No. 6938, as originally granted, stated on its face that it was granted "for the period of five years" from January 9, 1877; and although the instrument granting the first extension of five years states that it is granted "for another period of five years, to commence and be computed on and from the ninth day of January, which will be in the year one thousand eight hundred and eight-two;" and although the instrument granting the second extension of five years states that it is granted "for another period of five years, to commence and be computed on and from the ninth day of January, which will be in the year one thousand eight hundred and eighty-seven." By the language of section 17 of the Canadian Act of 1872, what was granted under it was "an extension of the patent"—of the same patent—for a further term. Therefore the Canadian patent does not expire, and it never could have been properly said that it would expire, before [166

January 9, 1892; and hence No. 197,314, if so limited as to expire at the same time with the Canadian patent, cannot expire before January 9, 1892.

Section 6 of the Act of March 3, 1839 (5 Stat. at L. 354), provided that a United States patent for an invention patented in a foreign country more that six months prior to the application of the inventor for the United States patent, should be limited to the term of fourteen years from the date or publication of the foreign patent. Section 25 of the Act of July 8, 1870 (16 Stat. at L. 201), provided that the United States patent for an invention "first patented or caused to be patented in a foreign country" should "expire at the same time with the foreign patent, or, if there be more than one, at the same time with the one having the shortest term; but in no case shall it be in force more than seventeen years." Section 4887 of the Revised Statutes provides, that "Every patent granted for an invention which has been previously patented in a foreign country shall be so limited as to expire at the same time with the foreign patent, or, if there be more than one, at the same time with the one having the shortest term; and in no case shall it be in force more than seventeen years."

67]

These provisions of the Act of 1870 and of the Revised Statutes mean that the United States patent shall not expire so long as the foreign patent continues to exist, not extending beyond seventeen years from the date of the United States patent, but shall continue in force, though not longer than seventeen years from its date, so long as the foreign patent continues to exist. Under section 4887, although, in the case provided for by it, the United States patent may on its face run for seventeen years from its date, it is to be so limited by the courts, as a matter to be adjudicated on evidence *in pais*, as to expire at the same time with the foreign patent, not running in any case more than the seventeen years; but, subject to the latter limitation, it is to be in force as long as the foreign patent is in force.

A contrary view to this has been expressed by several Circuit Courts of the United States.

In October, 1878, in the Circuit Court for the District of Rhode Island, in *Henry* v. *Providence Tool Company*, 3 Bann. & Ard. 501, it was held that the 25th section of the Act of July 8, 1870, meant that the United States patent should expire at the same time with the original term of a foreign patent for the same invention, without regard to any prolongation of the foreign patent which the patentee might procure from the foreign Government. In that case, the United States patent was granted October 10, 1871. A British patent for the same invention had been granted to the patentee on the 15th of November, 1860, for 14 years, and expired November 15, 1874. Thirteen days after the latter date an order was made for the extension of the British patent for four years, the extension bearing date as of the day after the expiration of the original term; but the court held that the United States patent expired on the 15th of November, 1874.

68]

That decision was followed by the Circuit Court for the Southern District of New York, in *Reissner* v. *Sharp*, 16 Blatchf. 383, in June, 1879, which case arose under section 4887 of the Revised Statutes. In that case, the United States patent, granted October 20, 1874, for seventeen years, was held to have expired on the 15th of May, 1878, because a patent was granted in Canada, under the authority of the patentee, for the same invention, on the 15th of May, 1873, for five years from that day, although in March, 1878, the Canada patent was extended for five years from the 15th of May, 1878, and also for five years from the 15th of May, 1883.

In *Bate Refrigerating Company* v. *Gillett*, 13 Fed. Rep. 553, in the Circuit Court for the District of New Jersey, in August, 1882, and in the same suit, in the same court, in August, 1887, 31 Fed. Rep. 809, in regard to the patent in question, in the present suit and on the same facts here presented, it was held, on the strength of the two circuit court cases above referred to, that the United States patent expired when the original term of the Canadian patent expired.

But we are of opinion that, in the present case, where the Canadian Statute under which the extensions of the Canadian patent were granted was in force when the United States patent was issued, and also when that patent was applied for; and where, by the Canadian Statute, the extension of the patent for Canada was a matter entirely of right, at the option of the patentee, on his payment of a required fee; and where the fifteen years' term of the Canadian patent has been continuous and without interruption, the United States patent does not expire before the end of the fifteen years' duration of the Canadian patent. This is true, although the United States patent runs, on its face, for seventeen years from its date, and is not, on its face, so limited as to expire at the same time with the foreign patent; it not being necessary that the United States patent should, on its face, be limited in duration to the duration of the foreign patent.

[169]

In *O'Reilly* v. *Morse*, 56 U. S. 15 How. 62 [14:601], the patent to Morse was issued June 20, 1840, for fourteen years from that day, while section 6 of the Act of March 3, 1839 (5 Stat. at L. 354), was in force, which required that every United States patent for an invention patented in a foreign country should be "limited to the term of fourteen years from the date or publication of such foreign letters patent." Morse applied for his United States patent April 7, 1838. He obtained a patent in France for his invention October 30, 1838. The objection was taken in the answer that the United States patent was void on its face because not limited to the term of the French patent. The circuit court held that the patent was not void, but that the exclusive right granted by it must be limited to fourteen years from October 30, 1838. The same objection was urged in this court, and the same ruling was made. In *Smith* v. *Ely*, 56 U. S. 15 How. 137 [14:634], which was a suit on the same patent, under the same facts, the same question arose and was decided in the same way. A full and interesting discussion of the question is to be found in *Canan* v. *Pound Manufacturing Company*, 23 Blatchf. 173, in regard to § 4887, which contains the same word "limited" found in § 6 of the Act of 1839, which word is not found in § 25 of the Act of July 8, 1870, from which § 4887 was taken.

Under this view, the time of the expiration

of the foreign patent may be shown by evidence *in pais*, either the record of the foreign patent itself showing its duration, or other proper evidence; and it is no more objectionable to show the time of the expiration of the foreign patent by giving evidence of extensions such as those in the present case, and thus to show the time when, by virtue of such extensions, the United States patent will expire.

We find in the record in this case, among the papers which it states were submitted to the court under the stipulation above referred to, a certificate of the Commissioner of patents, dated July 3, 1883, appended to a certified copy of the United States patent, stating that [170] the term thereof is limited so that it shall expire with the patent obtained by the patentee in Canada, No. 6938, dated January 9, 1877, for the same invention; that the proper entries and corrections have been made in the files and records of the Patent Office; that it had been shown that the original patent had been lost; and that the certificate is made because that patent was issued without limitation, as required by section 4887 of the Revised Statutes. While it may be proper, in a case where the date of a foreign patent issued prior to the granting of a United States patent to the same patentee for the same invention is made known to the Patent Office prior to the granting of the United States patent, to insert in that patent a statement of the limitation of its duration, in accordance with the duration of the foreign patent, it does not affect the validity of the United States patent if such limitation is not contained on its face.

It results from these views, that the decree of the Circuit Court must be reversed, and the case be remanded to that court, with a direction to take such further proceedings as shall be in accordance with law and with the stipulation between the parties, above referred to, and not inconsistent with this opinion.

---

[170] JAMES J. HILL, *Appt.*,

v.

CHICAGO AND EVANSTON RAILROAD COMPANY ET AL.

(See S. C. Reported's ed. 170-175.)

Jurisdiction of appeal—motion to dismiss—appeal bond—questions on the merits.

1. This court has no jurisdiction of an appeal, unless the transcript of the record is filed at the next term after the taking of the appeal.

2. On a motion to dismiss an appeal from a decree, it is not proper to decide whether a prior decree in the same case was a final decree, or what orders and decrees made by the circuit court, prior to the making of the decree appealed from, can be reviewed here on the appeal from it. These questions can only be considered when that appeal shall come up for hearing on its merits.

3. It does not affect the validity of an appeal bond or the integrity of an appeal, that the bond runs to the party against whom a decree for the recovery of money was rendered and also runs to other parties defendant as obligees, as to whom the suit was dismissed and against whom appellant may seek to obtain a decree on the hearing of the appeal.

4. It is not proper, on the motion to dismiss an appeal, to decide what questions may be involved on the hearing of that appeal.

[No. 866.]

Submitted Dec. 20, 1888. Decided Jan. 21, 1889.

APPEAL from a decree of the Circuit Court of the United States for the Northern District of Illinois, for the recovery of money, in a suit in equity to compel the transfer of shares of stock, and dismissing the suit as to some of the defendants.

On motions to dismiss appeals. *Motions granted in part and denied in part.*

The facts are stated in the opinion.

Messrs. **E. Walker** and **W. C. Goudy**, for appellees, in support of motions:

The decree of June 8, 1885, was final as to all of the defendants from which an appeal could have been taken and prosecuted.

St. Louis, I. M. & S. R. Co. v. *Southern Exp. Co.* 108 U. S. 24 (27: 638); *Bostwick* v. *Brinkerhoff*, 106 U. S. 3 (27: 73); *Grant* v. *Phœnix Ins. Co.* 106 U. S. 429 (27: 237); *Forgay* v. *Conrad*, 47 U. S. 6 How. 201 (12: 404); *Whiting* v. *Bank of U. S.* 38 U. S. 13 Pet. 15 (10: 33); *Michoud* v. *Girod*, 45 U. S. 4 How. 503 (11: 1076); *Thomson* v. *Dean*, 74 U. S. 7 Wall. 342 (19: 94); *French* v. *Shoemaker*, 79 U. S. 12 Wall. 97 (20: 270); *Barnard* v. *Gibson*, 48 U. S. 7 How. 650 (12: 857); *North Carolina R. Co.* v. *Swasey*, 90 U. S. 23 Wall. 405 (23: 136); *Green* v. *Fisk*, 103 U. S. 518 (26: 485); *Bronson* v. *La Crosse & M. R. Co.* 67 U. S. 2 Black, 524 (17: 347); *Stovall* v. *Banks*, 77 U. S. 10 Wall. 583 (19: 1036); *Todd* v. *Daniel*, 41 U. S. 16 Pet. 521 (10: 1054).

One defendant can appeal if he have a severable interest.

Forgay v. *Conrad*, 47 U. S. 6 How. 201 (12: 404); *Withenbury* v. *U. S.* 72 U. S. 5 Wall. 819 (18: 613); *Germain* v. *Mason*, 79 U. S. 12 Wall. 259 (20: 392); *Milner* v. *Meek*, 95 U. S. 253 (24: 444).

The appeal prayed, from the decree of June 8, 1885, was not prosecuted by filing the transcript of the record at the next term; and it is now too late to give jurisdiction.

Edmonson v. *Broomshire*, 74 U. S. 7 Wall. 306 (19: 91); *Hamilton* v. *Moore*, 3 U. S. 3 Dall. 371 (1: 642); *Blair* v. *Miller*, 4 U. S. 4 Dall. 21 (1: 724); *U. S.* v. *Hodge*, 44 U. S. 3 How. 534 (11: 714); *Villabolos* v. *U. S.* 47 U. S. 6 How. 90 (12: 352); *U. S.* v. *Curry*, 47 U. S. 6 How. 112 (12: 363); *The Virginia* v. *West*, 60 U. S. 19 How. 182 (15: 594); *U. S.* v. *De Pacheco*, 61 U. S. 20 How. 261 (15: 820); *Valley of Va. Ins. Co.* v. *Mordecai*, 62 U. S. 21 How. 200 (16: 95); *Mesa* v. *U. S.* 67 U. S. 2 Black, 721 (17: 350); *U. S.* v. *Gomez*, 68 U. S. 1 Wall. 690 (17: 677); *Castro* v. *U. S.* 70 U. S. 3 Wall. 46 (18: 163); *Mussina* v. *Cavazos*, 78 U. S. 6 Wall. 355 (18: 810).

The appeal from the decree confirming the master's report cannot bring up for review any questions except those which were decided since the final decree.

Turner v. *Farmers Loan & Trust Co.* 106 U. S. 552 (27: 273); *Sage* v. *Iowa Cent. R. Co.* 96 U. S. 712 (24: 641); *Buffington* v. *Harvey*, 95 U. S. 99 (24: 381); *Orchard* v. *Hughes*, 68 U. S. 1 Wall. 76 (17: 561); *Porter* v. *Pittsburg Bessemer Steel Co.* 120 U. S. 677 (30: 840); *Cosby* v. *Buchanan*, 90 U. S. 23 Wall. 453 (23: 142).

Mr. **Gordon E. Cole**, for appellant, in opposition:

The decree of June 8, 1885, was not a final decree.

Bostwick v. *Brinkerhoff*, 106 U. S. 3 (27: 73); *Forgay* v. *Conrad*, 47 U S. 6 How. 201 (12: 404); *Craighead* v. *Wilson*, 59 U. S. 18 How. 199 (15: 332); *The Palmyra*, 23 U. S. 10 Wheat. 502 (6: 375); *Beebe* v. *Russell*, 60 U. S. 19 How. 283 (15: 668); *Humiston* v. *Stainthorp*, 69 U. S. 2 Wall. 106 (17: 905); *Perkins* v. *Fourniquet*, 47 U. S. 6 How. 206 (12: 406); *Pulliam* v. *Christian*, 47 U. S. 6 How. 209 (12: 409); *Barnard* v. *Gibson*, 48 U. S. 7 How. 650 (12: 857); *Thomson* v. *Dean*, 74 U. S. 7 Wall. 342 (19: 94); *Ogilvie* v. *Knox Ins. Co.* 67 U. S. 2 Black, 539 (17: 349); *North Carolina R. Co.* v. *Swasey*, 90 U. S. 23 Wall. 405 (23: 136); *Green* v. *Fisk*, 108 U. S. 518 (26: 485); *St. Louis, I. M. & S. R. Co.* v. *Southern Exp. Co.* 108 U. S. 24 (27: 638); *Daines* v. *Kendall*, 119 U. S. 53 (30: 305).

One party having a common interest cannot, in a suit in equity, appeal while the case remains undetermined as to other parties.

U. S. v. *Girault*, 52 U. S. 11 How. 22 (13: 587); *Metcalf's Case*, 11 Coke, 38 (a); *Peet* v. *McGraw*, 21 Wend. 667; *Todd* v. *Daniel*, 41 U. S. 16 Pet. 531 (10: 1054); *Withenbury* v. *U. S.* 72 U. S. 5 Wall. 819 (18: 613); *Germain* v. *Mason*, 79 U. S. 12 Wall. 259 (20: 392); *Williams* v. *Bank of U. S.* 24 U. S. 11 Wheat. 414 (6: 508); *Masterson* v. *Herndon*, 77 U. S. 10 Wall. 416 (19: 953); *Simpson* v. *Greeley*, 87 U. S. 20 Wall. 152 (22: 338).

The appeal from the final decree of 1887 does bring up for review every question which was determined by any interlocutory order or decree made during the pendency of this suit.

Cosby v. *Buchanan*, 90 U. S. 23 Wall. 420 (23: 138); *Turner* v. *Farmers Loan & Trust Co.* 106 U. S. 552 (27: 273); *Sage* v. *Iowa Cent. R. Co.* 96 U. S. 712 (24: 641); *Bank of U. S.* v. *Smith*, 24 U. S. 11 Wheat. 171 (6: 443); *Minn.* v. *Batchelder*, 68 U. S. 1 Wall. 109 (17: 551).

[171] *Mr. Justice* **Blatchford** delivered the opinion of the court:

In this case, on the 8th of June, 1885, a decree was made by the court below in the following language:

"This cause coming on for final hearing upon the pleadings, depositions, and documentary evidence produced before the court, and the cause having been argued by counsel, and the court being sufficiently advised in the premises, It is ordered and decreed, that the complainant's bill be dimissed for want of equity as against the defendants William C. Goudy, Volney C. Turner, George Chandler, Samuel B. Chase, Ebenezer Buckingham, John DeKoven, John J. Johnson, S. S. Merrill, the North Chicago City Railway Company, and the Chicago, Milwaukee and St. Paul Railway Company, with their costs to be taxed by the clerk. It is further ordered and decreed that so much of the complainant's bill as relates to the certificate of one hundred and ten and two thirds shares of the capital stock, issued to A. B. Stickney & Company, dated September 30th, 1881, be dismissed for want of equity.

"It is further ordered and decreed, that all relief be denied to the complainant upon all matters and things in controversy herein, except as to the amount of money paid by the defendant William C. Goudy for right of way, in execution of the contract between him and A. B. Stickney & Company, of May 28th, 1880; and, for the purpose of ascertaining said amount of money, it is ordered, that this cause be retained as to the other defendants, and that it be and is hereby referred to Henry W. Bishop, one of the masters in chancery of this court, to take [172] additional testimony as to such amount, and that he make report of the amount so paid, and that, on the making of such report, such further decree will be rendered as may be equitable.

"It is further ordered, that, for the better discovery of the matters aforesaid, the parties are to produce before the said master, upon oath, all deeds or books, papers and writings in their custody or power relating thereto, and are to be examined on oath as the said master shall direct.

"And thereupon the complainant prays an appeal to the supreme court, which is allowed upon his filing a bond in the penal sum of five hundred dollars, with provisions required by law, and with security to be approved by the court."

The bond thus referred to was not given, nor was the appeal perfected, nor was the record filed in this court at its October Term, 1885.

On the 14th of July, 1887, the master in chancery having made a report in pursuance of the directions of the decree of June 8, 1885, and exceptions having been taken thereto by both parties, the court made the following decree:

"It is ordered, adjudged and decreed as follows, viz.: that the exceptions of both the complainant and the defendant the Chicago and Evanston Railroad Company, to the report of the master in chancery filed herein on the 31st day of January, 1887, be and the same are hereby overruled, and the said report approved and affirmed; that said Chicago and Evanston Railroad Company do forthwith pay unto said complainant the sum of sixty-five hundred and thirteen dollars ($6,513), together with interest upon the same from the thirtieth day of January, 1887, at the rate of six per cent per annum, and also costs of said reference to the master, to be taxed by the clerk of this court, and also the costs of this suit, for which plaintiff may have execution.

"It is further ordered and decreed, that all other relief prayed in the complainant's bill be denied as against said defendant the Chicago and Evanston Railroad Company, and that the complainant's bill be dismissed out of court for want of equity as against the remaining defendants, T. W. Wadsworth, Edwin Walker, [173] Elijah K. Hubbard, J. C. Easton, Julius Wadsworth, Hugh T. Dickey, J. Millbank, James Stillman, James T. Woodward, E. L. Frank, William Rockefeller, Selah Chamberlain, and George Smith, with their reasonable costs, to be taxed by the clerk, and that they have execution therefor against the said complainant.

"And thereupon the complainant prays an appeal to the Supreme Court of the United States, which is allowed upon his filing a bond in the penal sum of five hundred dollars, with provisions required by law, and with security to be approved by the court."

This appeal was perfected, an appeal bond

was given, and the record was filed in this court on the 17th of October, 1887. The obligors in that appeal bond are James J. Hill, W. P. Clough, and E. Sawyer; the obligees are the Chicago and Evanston Railroad Company, the Chicago, Milwaukee and St. Paul Railway Company, the North Chicago City Railway Company, William C. Goudy, Volney C. Turner, John DeKoven, George Chandler, T. W. Wadsworth, Edwin Walker, Elijah K. Hubbard, Samuel B. Chase, Ebenezer Buckingham, John J. Johnson, J. C. Easton, S. S. Merrill, Julius Wadsworth, Hugh T. Dickey, J. Millbank, James Stillman, James T. Woodward, E. L. Frank, William Rockefeller, Selah Chamberlain, and George Smith. The condition of the bond is as follows:

"*Whereas*, lately, at the July, 1887, Term of the United States Circuit Court for the Northern District of Illinois, in a suit depending in said court, wherein said James J. Hill was complainant and the Chicago and Evanston Railroad Company and the other above named obligees of this bond were defendants, a decree was rendered from which the said James J. Hill has taken an appeal to the Supreme Court of the United States; *Now*, the condition of the above obligation is such, that if the said James J. Hill shall prosecute his appeal with effect, and answer all costs if he fails to make his plea good, then the above obligation to be void; otherwise, to remain in full force and virtue."

Four motions are now made. One is a [174] motion by the Chicago and Evanston Railroad Company, T. W. Wadsworth, Edwin Walker, Elijah K. Hubbard, and J. C. Easton, to dismiss, as to each of them, the appeal from the decree of June 8, 1885, on the ground, among others, that the transcript of the record was not filed in this court at October Term, 1885.

This motion must prevail. It is well settled, by repeated decisions of this court, that it has no jurisdiction of an appeal unless the transcript of the record is filed here at the next term after the taking of the appeal. The appeal in the present case was prayed in open court on the 8th of June, 1885. *Credit Co.* v. *Arkansas Cent. R. Co.* 128 U. S. 258 [*ante*, 448], and cases there cited.

The second motion is by the North Chicago City Railway Company, the Chicago, Milwaukee and St. Paul Railway Company, William C. Goudy, Volney C. Turner, George Chandler, Samuel B. Chase, Ebenezer Buckingham, John DeKoven, John J. Johnson, and S. S. Merrill, to dismiss, as to each of them, the appeal from the decree of June 8, 1885, on the ground, among others, that the transcript of the record was not filed here at October Term, 1885. *This motion is granted*, for the reason before stated.

The third motion is by the North Chicago City Railway Company, the Chicago, Milwaukee and St. Paul Railway Company, William C. Goudy, Volney C. Turner, George Chandler, Samuel B. Chase, Ebenezer Buckingham, John DeKoven, John J. Johnson, and S. S. Merrill, to dismiss, as to each of them, the appeal from the decree of July 14, 1887, on the following grounds: (1) that the decree of June 8, 1885, was a final decree as to them; and (2) that the bond filed on the appeal from the decree of July 14, 1887, does not show that it was filed in pursuance of the decree of June 8, 1885, but recites only an appeal from the decree of July 14, 1887.

It is not proper, on a motion to dismiss the appeal from the decree of July 14, 1887, to decide whether the decree of June 8, 1885, was a final decree, or what orders and decrees made by the circuit court prior to the making of the decree of July 14, 1887, can be reviewed here on the appeal from the latter decree. Those questions can only be considered when that appeal shall come up for hearing on its merits.

The fourth motion is by the Chicago and [175] Evanston Railroad Company, T. W. Wadsworth, Edwin Walker, Elijah K. Hubbard, and J. C. Easton, to dismiss the appeal as to the decree of July 14, 1887, on the ground that the Chicago and Evanston Railroad Company, being the sole party against whom the decree of July 14, 1887, was rendered, ought to be the sole obligee in the appeal bond, the other persons named in the bond as obligees not being parties to the appeal; that the only matter which can be brought before this court for review is as to the amount fixed by the decree of July 14, 1887, and which the Chicago and Evanston Railroad Company was adjudged to pay; that the decree of June 8, 1885, was final as to the other questions; and that the appeal from the decree of July 14, 1887, should be limited to that decree, and proper orders, as to bond and otherwise, to that end, should be made.

We see no objection to the terms of the appeal bond, in respect of the parties named in it as obligees. It may very well be that the appellant will seek, on the hearing of the appeal from the decree of July 14, 1887, to obtain a decree against the persons making this motion; and it cannot affect the validity of the bond or the integrity of the appeal, either as respects the Chicago and Evanston Railroad Company or the other parties making the motion, that the bond runs to the obligees named in it.

The motion must, therefore, be denied in that respect, as it must, also, in regard to the other grounds alleged for the motion, for the reason before stated, that it is not proper, on a motion to dismiss the appeal from the decree of July 14, 1887, to decide what questions may properly be involved on the hearing of that appeal.

Ordered accordingly.

THE HANOVER FIRE INSURANCE [176] COMPANY OF NEW YORK ET AL., *Plffs. in Err.*,

v.

JOHN KINNEARD ET AL.

(See S. C. Reporter's ed. 176, 177.)

Refusal of separate trial—jurisdiction to review.

1. The action of the circuit court, in refusing plaintiffs in error a separate trial, is not open to review, upon a writ of error, where it appears that the value of the matter in dispute is not sufficient to give this court jurisdiction.

2. A writ of error cannot be maintained, under subdivision 4 of section 699 of the Revised Statutes, where the judgment was not rendered in a "case brought on account of the deprivation of any right, privilege or immunity secured by the Constitution of the United States, or of any right or privilege of a citizen of the United States.

[No. 1152.]

Submitted Jan. 7, 1889. Decided Jan. 21, 1889.

IN ERROR to the Circuit Court of the United States for the District of Kansas, to review judgments, severally rendered against plaintiffs in error, upon policies of insurance.

On motion to dismiss. *Granted.*

The facts are stated in the opinion.

Messrs. **A. J. Bentley,** *John W. Deford* and *W. Littlefield* for defendants in error, in support of motion.

Messrs. G. W. Cotterill, **Sam'l Shellabarger,** and **J. M. Wilson** for plaintiffs in error, in opposition.

Mr. Chief Justice **Fuller** delivered the opinion of the court:

John Kinneard, Lucia M. Laird, W. H. Williams, G. H. Embry, and Susan M. Phillips brought suit in the District Court of Franklin County, Kansas, against the Phœnix Insurance Company of Brooklyn, N. Y.; against the Western Insurance Company of Toronto, Canada; and against the Hanover Fire Insurance Company and the Citizens' Fire Insurance Company of New York; upon three several policies of insurance, for $2,500 each, which three cases were transferred, in October, 1886, on the ground of diverse citizenship, to the Circuit Court of the United States for the District of Kansas, where they were discontinued as to Lucia M. Laird and G. H. Embry, leaving as plaintiffs the defendants in error here. Upon the 12th of December, 1887, the court ordered, [177] the defendants severally objecting and excepting, that the cases be consolidated for trial; and they were accordingly tried together, separate verdicts being returned in favor of the Phœnix Insurance Company; against the Western Insurance Company for $1,847.88; and against the Hanover and Citizens' Companies for $2,067.82; and judgments were severally rendered thereon. To reverse the judgment against the latter this writ of error was prosecuted, which defendants in error now move to dismiss.

It is contended on behalf of plaintiffs in error that the three cases were independent and different from each other, both as to the grounds of action and as to the defenses, the plaintiffs only being the same and the losses occasioned by the same fire; that the circuit court, in consolidating them, abused the discretion reposed in it under section 921 of the Revised Statutes, which provides that "when causes of a like nature or relative to the same question are pending before a Court of the United States or of any Territory, the court may make such orders and rules concerning proceedings therein as may be conformable to the usages of courts for avoiding unnecessary costs or delay in the administration of justice, and may consolidate said causes when it appears reasonable to do so," and that thereby the plaintiffs in error were deprived of due process of law, that is, of a trial by jury according to the settled course of judicial proceedings in like cases.

But the action of the court in refusing plaintiffs in error a separate trial is not open to review upon this writ of error, since it appears that the value of the matter in dispute is insufficient to give this court jurisdiction; nor can the writ be maintained, as argued, under subdivision 4 of section 699, of the Revised Statutes, because this judgment was not rendered in a "case brought on account of the deprivation of any right, privilege or immunity secured by the Constitution of the United States, or of any right or privilege of a citizen of the United States." *Cogswell* v. *Fordyce,* 128 U. S. 891 [*ante,* 484].

The motion must be granted and the writ of error dismissed, and it is so ordered.

WILLIAM P. MARROW ET AL., *Plffs. in Err.,* [178]

v.

JOSEPH B. BRINKLEY ET AL.

(See S. C. Reporter's ed. 178-181.)

Review of state judgments—jurisdiction

1. Unless it appears affirmatively that the decision of a federal question was necessary to the determination of a cause, and that it was actually decided, or that the judgment, as rendered, could not have been given without deciding it, this court has no jurisdiction of a writ of error to a state court.

2. Nor can jurisdiction be retained upon the suggestion that if the state court, proceeding upon the principles of general law only, were found to have erred in the rendition of its decree, the State had thereby deprived the plaintiffs in error of their property without due process.

[No. 1262.]

Submitted Jan. 7, 1889. Decided Jan. 21, 1889.

IN ERROR to the Supreme Court of Appeals of the State of Virginia, to review a decree of that Court affirming a decree of the State Circuit Court, dismissing an action to set aside decrees for the sale of lands and the deeds to the purchasers.

On motion to dismiss, for want of jurisdiction. *Dismissed.*

The facts are stated in the opinion.

Messrs. **Alfred P. Thom,** *Thomas Tabb* and **Richard Walke** for defendants in error, in support of motion.

Mr. **W. H. Burroughs** for plaintiffs in error, in opposition.

Mr. Chief Justice **Fuller** delivered the opinion of the court:

In 1870 certain suits were pending in the Circuit Court of the County of Elizabeth City, Virginia, brought by judgment creditors of one Parker West to subject his lands to the satisfaction of their judgments, under the provisions of chapter 182 of the Code of 1873, authorizing sale of the judgment debtor's lands when it appeared that the rents and profits for five years would be insufficient to discharge the liens against them. These causes were consolidated, and proceeded to decree in September, 1870, for an account of all the real estate of said West, its annual value, and the liens thereon, under which a report was made by a commissioner showing the judgments against West and the lands belonging to him and their annual and fee-simple value, and that the rents [179] and profits would not satisfy the liens in five years; which report was confirmed by decree entered May 4, 1871, which also appointed special commissioners to sell said lands, in-

cluding "all the interest of Parker West in that certain tract of land known as 'Newport News,' containing 300 acres," etc. This land had been sold June 30, 1864, upon proceedings against West under the Confiscation Act of July 17, 1862, and a deed had been executed and delivered to the purchasers February 15, 1865. No such proceedings had taken place in reference to other lands of West involved in the litigation, and one of the judgments counted on had been recovered as early as 1861. West died in December, 1871, and on the 4th of May, 1872, the following decree was entered in said consolidated cause:

"The death of Parker West being suggested, on the motion of William P. Marrow and Mary E. his wife, Elizabeth R. West, George B. West, and M. Smith and Missouri, his wife, the said Mary E. Marrow, Elizabeth R. West, G. B. West, and Missouri Smith being the heirs at law of the said Parker West, to be made parties defendant to these causes, the said William P. Marrow and M. E. his wife, E. R. West, G. B. West, and M. Smith and Missouri, his wife, are hereby made parties defendant to these causes, with leave to file their answers. This cause, then, this day, again came on to be heard on the papers formerly read and on the report of Special Commissioners C. K. Mallory, Thomas Tabb, and G. M. Peek of the sales made by them under a former decree in these causes, to which report no exceptions have been filed, and was argued by counsel. On consideration whereof the court doth adjudge, order, and decree that the said report and the sales reported therein be, and the same are hereby, confirmed."

The sale of a portion of the Newport News land in controversy here was confirmed by that decree; and the sale of the remainder was made thereafter, and reported to the court, and the sale confirmed in October, 1872.

In January, 1886, W. P. Marrow and Mary E. his wife, George B. West, and Missouri Smith filed their bill of complaint in the state circuit court, seeking to set aside the decrees of [180] May 4, 1871, and May 4, 1872, and the deeds which had been made to purchasers of lands thereunder; insisting that West's title had been devested by the confiscation proceedings, and alleging that they never appeared in said consolidated causes in person, or employed any attorney at law to represent them, and that no process was ever served upon them, and charging fraud in the entry of their appearance.

Upon the final hearing their bill was dismissed, and they prosecuted an appeal to the Supreme Court of Appeals of Virginia, which court affirmed the decree of the court below, holding that, as between the heirs and the purchasers the former were bound by the recitals of the decree of May 4, 1872; and that, upon the evidence *aliunde* the record, the heirs were estopped by *laches* and by conduct, to claim title as against the purchasers who were such in good faith for value and without notice. The complainants filed a petition for rehearing in the court of appeals, in which they stated "that on the 17th day of May, 1888, in the above entitled cause a decree was entered simply affirming the decree of the lower court entered on the 26th day of October, 1886, dismissing the bill of the plaintiffs below for reasons stated in the opinion of the court. The reasons stated are based upon the equitable doctrine of estoppel *in pais* and innocent purchaser for value, without notice, the language of the opinion upon these points being as follows: (*a*) 'Having kept a sinister silence when they should have spoken with candor and courage, equity now closes her door and leaves them to obtain from a court of law what they can.' (*b*) 'That as against an innocent purchaser for value, without notice, a court of equity is without jurisdiction, and will refuse to give any assistance whatever, leaving the party to enforce his technical rights at law.'" The rehearing was denied, and the writ of error sued out of this court, a motion to dismiss which is now before us. In the petition for the allowance of this writ it is said that the final judgment of the court of appeals against plaintiffs in error was rendered in a suit "wherein was drawn in question a right, title, privilege, and immunity to real estate arising upon the construction of the Act of Congress of the United States approved July 17, 1862, entitled 'An [181] Act to Suppress Insurrection, to Punish Treason and Rebellion, to Seize and Confiscate the Property of Rebels, and for Other Purposes,' and the joint resolution passed concurrently therewith, and the decision is against the right, title, privilege, and immunity claimed under the said statute."

We do not so understand this record. Conceding that West's title to the particular lands had been devested by the sale under the confiscation proceedings, and that the interest of the heirs remained unaffected thereby, yet, if they were concluded, under the circumstances, by the decree of May, 1872, or upon the principles of estoppel and laches, that disposed of their case adversely to them; and it was upon these grounds that the Virginia Courts proceeded, and not upon any decision against a right, title, privilege, and immunity claimed under the Constitution or any statute of, or authority exercised under, the United States. It was only if the decision had been otherwise upon these points that any question could have arisen as to the validity of the Confiscation Act and Resolution and the proceedings thereunder.

Unless it appears affirmatively that the decision of a federal question was necessary to the determination of the cause, and that it was actually decided, or that the judgment as rendered could not have been given without deciding it, this court has no jurisdiction of a writ of error to a state court. In this case the judgment as rendered involved the decision of no such question, and none such was actually decided.

Nor can jurisdiction be retained upon the suggestion, made for the first time in this court, that if the court of appeals, proceeding upon the principles of general law only, were found to have erred in the rendition of its decree, the State of Virginia had thereby deprived the plaintiffs in error of their property without due process.

The writ of error is dismissed.

[206] *Ex parte:*

In the Matter of THE FARMERS' LOAN AND TRUST COMPANY, *Petitioner.*

(See S. C. Reporter's ed. 206-216.)

Appealable order — receiver's certificate — when first lien—judicial discretion—right of appeal —mandamus.

1. An order or decree, made after a decree which disposes of the principal subject of litigation, which passes upon the material rights of the parties and partakes of the nature of a final decision of those rights, may be appealed from.
2. An order authorizing a receiver of a railway company to borrow a sum of money on his certificates and directing that the same shall be a first lien on the property, made after a decree of foreclosure and sale of the property, is of such final nature that an appeal can be taken from it to this court.
3. Such certificates, issued under such order and containing on their face the provision authorized by it, constitute a first lien upon the property of the railway company to be sold under the final decree.
4. Authority vested in the judges of the circuit court, to be exercised according to their discretion, must be exercised and governed by the principles of a judicial discretion.
5. The necessity of the order to issue receiver's certificates for the preservation of the railway from destruction during the pendency of the appeal on the main case, does not prevent the right of appeal from the order.
6. Writ of mandamus granted directing the judges of the circuit court to allow the appeal.

[No. 4. Original.]

Argued Dec. 17, 18, 1888. Decided Jan. 21, 1889.

RETURN to rule to show cause why a writ of *mandamus* should not issue, directing the Judges of the Circuit Court to allow an appeal. *Mandamus granted.*

The facts are stated in the opinion.

Mr. **Herbert B. Turner,** for petitioner:

The trustee has an absolute right to appeal from the order in question, and the action of the judge in allowing the appeal is merely perfunctory.

U. S. R. S. § 692; *U. S.* v. *Adams*, 73 U. S. 6 Wall 101 (18: 792); *Burlington etc. R. Co.* v. *Simmons*, 123 U. S. 52 (31:73); *Hudgins* v. *Kemp*, 59 U. S. 18 How. 530, 537-8 (15:511, 514); *Callan* v. *May*, 67 U. S. 2 Black, 541 (17: 281); *Bostwick* v. *Brinkerhoff*, 106 U. S. 3 (27:73); *Williams* v. *Morgan*, 111 U. S. 684 (28: 559); *Blossom* v. *Milwaukee & C. R. Co.* 68 U. S. 1 Wall. 655 (17: 673); *Fosdick* v. *Schall*, 99 U. S. 235 (25:339); *Trustees of Internal Improvement Fund* v. *Greenough*, 105 U. S. 527 (26: 1157); *Burnham* v. *Bowen*, 111 U. S. 776 (28: 596); *Forgay* v. *Conrad*, 47 U. S. 6 How. 201, 204 (12: 404); *Stovall* v. *Banks*, 77 U. S. 10 Wall. 586 (19: 1087); *Wabash & E. Canal Co.* v. *Beers*, 66 U. S. 1 Black, 54 (17: 41).

A writ of mandamus is the appropriate remedy when the circuit court refuses to allow an appeal.

U. S. v. *Gomez*, 70 U. S. 3 Wall. 752 (18: 212); *Ex parte South & N. Ala. R. Co.* 95 U. S. 221 (24: 355); *Ex parte Milwaukee R. Co.* 72 U. S. 5 Wall. 825 (18:676); *Sage* v. *Iowa Cent. R. Co.* 93 U. S. 412 (23:933); S. C. 96 U. S. 714 (24: 643).

The bondholders have no protection whatever except by appeal.

Cleveland v. *Chamberlain*, 66 U. S. 1 Black, 419 (17:93); *Latham's App.* 76 U. S. 9 Wall. 145 (19: 771).

Mr. **J. Hubley Ashton,** for respondents:

The burden is upon the petitioner to show that it has a clear right to an appeal which has been refused.

Mussina v. *Cavazos*, 61 U. S. 20 How. 289 (15: 879); *Ex parte Balt. & O. R. Co.* 106 U. S. 5 (27: 78); *Re Burdett*, 127 U. S. 771 (*ante*, 321).

The petitioner is not entitled to a mandamus unless the order of May 26, 1888, is a final decree and the amount in dispute exceeds $5,000.

The Palmyra, 23 U. S. 10 Wheat. 502 (6: 375); *Forgay* v. *Conrad*, 47 U. S. 6 How. 205 (12: 404); *Beebe* v. *Russell*, 60 U. S. 19 How. 286 (15: 669); *Humiston* v. *Stainthorp*, 69 U. S. 2 Wall. 106 (17:905); *Milwaukee & M. R. Co.* v. *Soutter*, 69 U. S. 2 Wall. 521 (17: 903); *Blossom* v. *Milwaukee & C. R. Co.* 68 U. S. 1 Wall. 655 (17: 673); *Butterfield* v. *Usher*, 91 U. S. 248 (23:319); *Trustees of Internal Improvement Fund* v. *Greenough*, 105 U. S. 531 (26: 1159); *Williams* v. *Morgan*, 111 U. S. 684 (28: 559); *Ex parte Jordan*, 94 U. S. 251 (24:125); *Wallace* v. *Loomis*, 97 U. S. 146 (24:895); *Miltenberger* v. *Logansport C. & S. W. R. Co.* 106 U. S. 286 (27:117); *Union Trust Co.* v. *Ill. Midland R. Co.* 117 U. S. 434 (29: 963); *Chicago, D. & V. R. Co.* v. *Fosdick*, 106 U. S. 84 (27: 65); *Elgin* v. *Marshall*, 106 U. S. 580 (27: 249); *Farmers Loan & Trust Co.* v. *Waterman*, 106 U. S. 270 (27: 117).

It does not appear that the order of May 26, 1888, affects the right of the petitioner to an amount sufficient to give this court jurisdiction, or to any amount.

Wallace v. *Loomis*, 97 U. S. 146 (24: 895); *Union Trust Co.* v. *Ill. Midland R. Co.* 117 U. S. 456 (29: 970).

Receivers' certificates are not negotiable instruments, and purchasers of such securities are bound to take notice of the orders, under which they were issued, and the records of the court with regard to them.

Stanton v. *Ala. & C. M. R. Co.* 2 Woods, 506, 512; *Union Trust Co.* v. *Ill. Midland R. Co.* 117 U. S. 456, 461 (29: 970, 972); *Swann* v. *Wright*, 110 U. S. 599 (28:255); *Turner* v. *Peoria & S. R. Co.* 95 Ill. 134; Beach, Receivers, § 396 *et seq.*

Mr. Justice **Miller** delivered the opinion of the court: [207]

At the request of the Farmers' Loan and Trust Company, a rule was granted, in the early part of the present term of this court, on the Judges of the Circuit Court of the United States for the Northern District of Texas, to show cause why a mandamus should not issue requiring them to allow an appeal, and to approve a bond upon such appeal, from an order of that court made in the case of that company against the Texas Central Railway Company.

The litigation to which this matter relates was commenced in that court by a bill filed by Morgan's Louisiana and Texas Railroad and Steamship Company against the Texas Central Railway Company, for the appointment of a receiver and for the sale of the property of the railway company to enforce an alleged lien. The Farmers' Loan and Trust Company afterwards became a party also, and set up, by cross bill and otherwise, a mortgage against the railway company prior to the lien of the

Morgan Company. Receivers were appointed in the progress of that suit, and a final decree rendered by the court in 1887, ordering a sale of the property and recognizing the paramount lien of the Trust Company to the extent of $4,000,000 and over, and holding that the claim of the original complainant was subordinate to that. Appeals were taken, accompanied by *supersedeas*, from the decree of foreclosure, both by the original complainant, the Morgan Company, and the railway company, which appeals are now pending in this court on the docket.

A motion was filed here at the last term to advance the cause, but it was denied. On February 15, 1888, and after said decree of foreclosure and sale was made, and after the appeal in the case from that decree was taken to this court, and a *supersedeas* bond filed, the receivers of the railway company presented their [208] petition to the circuit court for an order authorizing them to borrow the sum of $120,000 on certificates, the same to be a first lien on the property. The making of this order was opposed by the Trust Company. The matter was referred to a master to report, and on the coming in of his report, which was in favor of the petition of the receivers, their request was granted, and an order was made authorizing them to expend that sum on the railway, and to borrow money for this purpose, for which they were to issue certificates that should be a first lien on the entire property of the railway company, except as to $20,000 of certificates which had already been issued under another order.

The Trust Company, believing that this order would work a great injustice to the bondholders whom they represented, and who had the first lien on the property of the railway company, applied successively to the Circuit Judge and the Circuit Justice for the allowance of an appeal, and the approval of a bond to operate as a *supersedeas* which they offered, and the sufficiency of which has not been controverted.

After argument on the subject before both of these judges, they declined to either allow the appeal or approve the bond. Application was then made to this court for a rule upon them to show cause why this appeal should not be allowed and the bond approved. The rule was granted, and the return thereto made by the Circuit Judge is now before us, giving the reasons why he does not think the appeal should be allowed. The question now before us is on the sufficiency of this return.

The reason why the judges declined to allow this appeal may be substantially divided into two. The first and most important of these is that the order from which the appeal is asked is not a final decree within the meaning of the Act of Congress on that subject, but is a mere ancillary proceeding for the protection of the property pending an appeal from the principal decree now before this court. But the doctrine that, after a decree which disposes of a principal subject of litigation and settles the rights of the parties in regard to that matter, there may subsequently arise important matters requiring the judicial action of the court in relation to the same property and some of the same rights litigated in the main suit, making necessary substantive and important orders and decrees in which the most material rights of the parties may be passed upon by the court, and which, when they partake of the nature of final decisions of those rights, may be appealed from, is well established by the decisions of this court.

Blossom v. *Milwaukee & C. R. Co.* 68 U. S. 1 Wall. 655 [17:673]; *Forgay* v. *Conrad*, 47 U. S. 6 How. 201 [12:404]; *Fosdick* v. *Schall*, 99 U. S. 235 [25:339]; *Williams* v. *Morgan*, 111 U. S. 684 [28:559]; *Burnham* v. *Bowen*, 111 U. S. 776 [28:596].

The question in such cases is not whether the order complained of is of a character decisive of questions that the parties are entitled to have reviewed in the appellate court, but whether the order or decree is of that final nature which alone can be brought to this court on appeal. It is upon this ground mainly that the right of appeal is resisted in the present case; but we [214] are of opinion that, within the true principles which establish the finality of a decree of the circuit court in reference to the allowance of an appeal, this order is a final decree.

If the order is executed, the first thing to be done under it will be to borrow money to the extent authorized therein, and then the receivers will issue the certificates contemplated in it. It is not necessary to hold here what the position of the holders of such certificates would be, if the order contained no provision that they should be the first lien upon the property of the company. It might be, but it is not necessary to decide that question here, that such an order would not be conclusive of the right of the holders of such certificates to priority of payment out of the proceeds of the sale of the railway. It is one of the arguments used before us, that upon a final sale, and an order by the court for the distribution of its proceeds, such certificates would not necessarily be held to have such priority; but that, issued under this order, and containing on their face the provision authorized by it, they would constitute a first lien upon the property of the railway company to be sold under the final decree, is, we think, very clear. Such order standing unrepealed, we do not think that the court in a subsequent stage of the same litigation, in the same case and in regard to the same subject matter, could be permitted to say that the holders of these certificates must establish their right to priority of payment; but we are of opinion that such holders, under the decree of this court that they should have priority standing unreversed, would be entitled to such first lien.

These views we do not propose to elaborate, further than to say that if this order does not give the lender of the money such prior lien upon the proceeds of the property of the company it is because the court had no authority to make it, and as it would be a fraud upon such lender justice could only be done by enforcing it.

If this view of the subject be correct, of which we entertain no doubt, the order is a final one. It is a decree fixing upon the property, on which the trust company now has a first lien, another lien of $120,000, and making it paramount to that. It changes the relation [215] of that company to this property, displaces its rights as settled by a decree now pending in this court, and if that decree is affirmed it in effect modifies it, although this court may say

that it should stand and be enforced. This order comes within all the elements of finality which we can imagine to belong to a decree of the circuit court. It establishes certain rights of the parties, to the injury, as petitioners believe, of their interests in the property.

We need not refer to cases on the subject of finality, for they are numerous, and the principles on which they have been decided apply to widely varying circumstances. But while we are not aware of any case precisely in point to the one before us, we are satisfied that it is within the purpose of the statute and the principles by which it is to be construed.

The other reason given why the appeal should not be granted is that the action of the circuit court in the case is one within its discretion. All we have to say upon this subject is, that if it be an authority vested in the judges of the circuit court, it must be exercised and governed by the principles of a judicial discretion, and the very point to be decided upon an appeal here is whether they had such discretion, and whether they exercised it in a manner that cannot be reviewed in this court.

The question is one which in its nature must be a subject of appeal. Whether the court below can exercise any such power at all, after the case has been removed from its jurisdiction into this court by an appeal accompanied by a *supersedeas*, is itself a proper matter of review; and still more, whether, in the exercise of what the court asserts to be its discretionary power, it has invaded established rights of the petitioners in this case, contrary to law, in such a manner that they can have no relief except by an appeal to this court. This is a matter eminently proper to be inquired into upon an appeal from such an order. Upon the hearing of that appeal this court may be of opinion that the order was one proper to be made, in which case it will be affirmed. If, however, it believes that it was an improper one, and will seriously prejudice the rights of the petitioners, it will [216] be reversed and set aside, as it should be. In granting the appeal this court, of course, does not undertake to decide whether the order was rightfully made, if the court had the requisite power, but can only do that upon the hearing of the appeal.

For the same reasons this court cannot consider, on this motion, the urgent appeals made to it in regard to the necessity of this order for the preservation of the railway from destruction during the pendency of the appeal on the main case. That is a matter only fit to be considered on the hearing of the appeal, which we think should be granted.

The writ of mandamus, directing the Judges of the Circuit Court to allow the appeal and to approve a sufficient bond, is granted.

Mr. Justice **Bradley** concurred in the judgment for reasons orally stated by him.

---

[193] WILLIAM G. GALIGHER, *Appt.*,
v.
THOMAS R. JONES.

(See S. C. Reporter's ed. 193-202.)

Stock broker—duty of—refusal to sell—notice of sale—damages—sale without direction.

1. A broker is but an agent, and is bound to follow the directions of his principal, or give notice that he declines to continue the agency.

2. In the absence of a special agreement to the contrary, it is the principal's judgment, and not that of the broker, that is to control in the purchase and sale of stocks.

3. Where the principal directs his broker, by telegram, to change one stock into another, the broker should give prompt notice, by telegram, if he refuses to make the change; and a delay caused by notifying the principal by mail is inexcusable, and the broker is liable to his principal for the damages sustained thereby.

4. Where the broker sold stock of his principal, of his own motion, and without notice to the principal, *held*, that he was only liable for any advance on the stock that took place up to the time when the principal received notice of the sale and had reasonable time to replace it by the purchase of new stock.

5. Where the broker sells stock of his principal and reports the sale to the latter, and he expresses no dissatisfaction with the sale at the time, he is not entitled to damages on account of the sale.

6. Where the broker sells stock of his principal without the directions of the latter, and is thereby liable for conversion, the measure of damages is the highest intermediate value of the stock between the time of its conversion and a reasonable time, after the owner has received notice of it, to enable him to replace the stock.

[No. 75.]

Submitted Nov. 14, 1888. Decided Jan. 21, 1889.

APPEAL from a judgment of the Supreme Court of the Territory of Utah, in favor of plaintiff, in an action by a stock broker against his customer, for advances and commissions. *Reversed.*

The facts are stated in the opinion.

Mr. **Jno. R. McBride**, for appellant:

No lien is implied by the law.

Danforth v. *Pratt*, 42 Maine, 50; *Legg* v. *Willard*, 17 Pick. 140; *Jarvis* v. *Rogers*, 15 Mass. 389; *Covell* v. *Loud*, 135 Mass. 44; *Randel* v. *Brown*, 43 U. S. 2 How. 406 (11: 318); *Chandler* v. *Belden*, 18 Johns. 157.

Mr. **C. W. Bennett**, for appellee:

Appellee was practically pledgee.

Markham v. *Jaudon*, 41 N. Y. 235.

Appellee was a banker and hence would have a banker's lien.

Bank of the Metropolis v. *New England Bank*, 42 U. S. 1 How. 235 (11: 115); Morse, Banks and Banking, 42.

As a banker or factor he would have a lien. Dunlap's Paley, Agency, 128, 129.

Mr Justice **Bradley** delivered the opinion of the court: [194]

This is a suit brought by Jones, a stock broker, against his customer for the balance of account alleged to be due to the plaintiff arising out of advances of money and purchases and sales made, and commissions. The complaint, or declaration, states "that between the 15th day of January, 1877, and the 15th of January, 1879, the plaintiff, as a stock broker, at the special instance and request of the defendant, paid and advanced on an open account current, to and for the use of the defendant, divers sums of money, and also earned at the defendant's [195] request, and became entitled to, divers commissions as a broker, for all of which monthly accounts were rendered and balances struck, and, by agreement, interest charged monthly on balances; and that on the first day of March, 1879, there was due and unpaid from defendant to plaintiff the sum of $6,232.30, no part of which has been paid." Judgment is demanded for this sum, with interest and costs.

Galigher, the defendant below, in his answer, after denying any indebtedness to the plaintiff, states that the plaintiff is a banker at Salt Lake City, and that the defendant has had for two years past an account with him as such, and that "the plaintiff, at the defendant's request, and as his agent, bought or caused to be bought at the Mining Stock Exchange Board, in San Francisco, California, certain mining stocks, for and on account of this defendant, and at various times thereafter in the years 1877 and 1878, on the order and at the direction of this defendant, and as his agent aforesaid, bought and sold mining and other stocks up to about the date of the complaint; that at divers times during and between the dates above specified this defendant paid into said plaintiff's bank sums of money on account of said purchases, and to the credit thereof, and which was so applied by plaintiff on defendant's order.

"And defendant denies that at the date of the complaint the sum of $5,000, or any sum was due the plaintiff on said account, or on any account, for loans or advances from plaintiff to defendant. Defendant further alleges that it was distinctly agreed between the plaintiff and this defendant in the business that said purchases of stock by the plaintiff were made on defendant's credit, and that said stocks were bought and were to be held subject to defendant's order at all times, this defendant agreeing to pay said plaintiff commissions for his services as agent and an agreed rate of interest on any advances he might make, and at no time had the plaintiff any authority to either buy or sell stocks on defendant's account, except by his order."

The defendant then set up the following counterclaims, to wit:

1. That on the 13th day of November, 1878, [196] being at Virginia City, he ordered the plaintiff (at Salt Lake City), by telegraphic despatch, to sell certain mining stocks then in his hands as defendant's agent, to wit: 820 shares of "Justice" stock, worth $9 per share; 50 shares of "Alta" stock, worth $8 per share; 200 shares of "Tip Top" stock, worth $1.60 per share, and to invest the proceeds in "North Bonanza" stock, another mining stock on the same board, which the defendant had been investigating; that the plaintiff received this dispatch in ample time to make the transaction, as directed, on that day, but refused and neglected to do so; and that the defendant relied on its being done, and agreed with another party to sell the stock he had ordered purchased; that the plaintiff did not give notice to the defendant of his refusal to comply with said order, until several days afterwards, and then by letter; that afterwards, and without any orders so to do, the plaintiff sold the "Alta" stock at $7.75 per share; the "Justice" at $4.40 per share; and the "Tip Top" at $1.25 per share, making a net loss to defendant of $1,200; and that the "North Bonanza" stock was not worth more than $2 per share on that day, and within five days thereafter it advanced to $5.60 per share, which the defendant would have realized if the plaintiff had complied with his order,—whereby the defendant lost the sum of $6,125.

2. The defendant further alleged, that in the same month of November, 1878, the plaintiff, as defendant's agent, held for him 600 shares of mining stock known as "Challenge" stock; and without his consent, on the 27th and 29th of said November, sold the same for his, the plaintiff's, own use, to the damage of the defendant of $2,850.

3. That on the 22d day of November, 1877, the plaintiff held for the defendant, as his agent as aforesaid, 50 shares of mining stock known as "Ophir" stock, worth at that date $37.50 per share, and on that day pretended to defendant that he had sold said stock for defendant, and so reported to him, when in fact he had not sold said stock, but continued to hold the same, and afterwards sold it for $100 per share, the advance amounting to $3,125, which is justly due from the plaintiff to the defendant.

The case being at issue, was tried by a jury [197] and resulted in a verdict of $5,412.50 for the defendant. This verdict was set aside, and a new trial awarded, and the case was next tried by a referee appointed by the court. He duly reported his findings of fact and law, upon which the court gave judgment for the plaintiff for the sum of $7,028. The substance of the findings of fact was: That the plaintiff was a banker in Salt Lake City; that during the years 1878 and 1879 he bought and sold mining stocks for the defendant upon defendant's order and request, and made the advances necessary for the purchases, and was to receive commissions on the purchases and sales, and interest on the advances; and to hold the stocks purchased for defendant in his own name as collateral security for any balance due to him. With regard to the first defense set up by the defendant, the referee found, that on the 13th of November, 1878, the plaintiff held of stocks purchased for defendant, amongst others, 820 shares of "Justice," then worth $9 per share; 50 of "Alta," worth $18 per share; and 200 of "Tip Top," worth $1.60 per share; and that on that day the defendant, being at Virginia City, ordered plaintiff by telegram to turn his said stocks without limit into "North Bonanza" at limit of $2.75; that the plaintiff received said telegram at Salt Lake City on the same day in time to have sold the stocks ordered sold, and to have purchased the North Bonanza, which was then selling for $2 and $2.50 per share; that the plaintiff failed and refused to obey the directions given in the telegram, and failed to notify the defendant of his refusal until the 15th of November, when he notified him by letter written on the 18th and received by defendant on the 15th; that within a few days the price of North Bonanza advanced to $5 and $5.50 per share, having reached $3.50 on the 16th of November, and before the 23d receded to a point below what it was on the 13th. The defendant at the time of sending his telegram to the plaintiff was owing him more than $4,000 for advances, commissions and interest, over and above the market value of the stocks then held by him for the defendant. As a conclusion of law, and under the decision of the supreme court of the Territory, given upon setting aside the verdict rendered on the first trial, [198] the referee disallowed this counterclaim, holding, in conformity with the view of the court, that the plaintiff was not bound to comply with

the defendant's directions about the stock, and not bound to give him any prompter notice than he did give. The court, in its opinion, as quoted by the referee in his report, had said: "Was the plaintiff under obligation to sell the stock and invest the proceeds of such sale as directed by the defendant? . . . This order in effect directed the plaintiff to dispose of certain securities held by him and to take another in place of them . . . I do not, in the examination of the record and testimony, find any contract or understanding between the parties requiring the plaintiff to do it. The order to sell and reinvest being one, the plaintiff was not obliged to comply with it. The difference between the values of the stocks at the time the order was made and at the time they were afterwards sold is immaterial in this action. The right of the plaintiff to sell at the time of sale and the good faith and sound discretion in which it was made are not in issue. I am, therefore, of the opinion that the verdict allowing damages for the failure of plaintiff to sell the Justice, Alta and Tip Top mining stocks, as directed by the defendant on November 13, 1878, is not supported by evidence rightly before the jury, and that there was error in admitting evidence as to the value of the stock of the North Bonanza in support of the item of counterclaim, based upon the failure of the plaintiff to comply with the order to purchase."

In this we think the court was in error. A broker is but an agent, and is bound to follow the directions of his principal, or give notice that he declines to continue the agency. In the absence of a special agreement to the contrary it is the principal's judgment, and not his, that is to control in the purchase and sale of stocks. The latter did not ask for any further advances by the order in question; he only directed a conversion, or change of one stock into another. The plaintiff should have given prompt notice that he objected and declined to make the change. Telegraphic communication was used by the defendant, and no reason appears why the plaintiff could not have used the same. The delay caused by using the mail alone was inexcusable under the circumstances. The plaintiff charged ample compensation for his services, and was bound to act faithfully, fairly and promptly. We think that he was liable for all the damages which the defendant sustained by his refusal to change the stocks, both for the loss on the sales of the "Justice," "Alta" and "Tip Top" and the loss occasioned by not purchasing the "North Bonanza." The report of the referee, being made in conformity with the decision of the supreme court, does not show sufficient facts to determine the amount of loss in these respects. If the answer states the facts truly, the loss on the failure to sell the old stocks was over $2,000; and it appears from the report that the North Bonanza could have been purchased at $2 to $2.50 per share on the 13th of November, and sold for $5 to $5.50 within a few days,—showing a loss of $3 per share; and as the proceeds of the other stocks, if they had been sold, as directed, would have been sufficient to purchase 1,600 to 2,000 shares of North Bonanza, the loss on this account must have been more than $5,000. But the want of a sufficient finding of facts necessitates a new trial.

[199]

As to the second item of counterclaim set up in the answer, namely: the alleged wrongful sale by the plaintiff of 600 shares of "Challenge" stock, the referee found that the plaintiff held such stock for the defendant, and on the 27th and 29th of November, 1878, of his own motion, and without notice to the defendant, sold it for $1.25 per share; that in December the stock sold as high as $2 per share; in January the highest price was $3.10; in February the highest price was $5.50. The referee allowed the defendant the highest price in January, namely, $3.10 per share, being an advance of $1.85 above what the plaintiff sold the stock for, which, for the whole 600 shares amounted to $1,110. The reason assigned by the referee for not allowing the defendant the highest price in February (namely, $5.50 per share) was that before that time the defendant had reasonable time, after receiving notice of the sale of his stock by the plaintiff, to replace it by the purchase of new stock, if he desired so to do; and he allowed him the highest price which the stock reached within that reasonable time. In this conclusion we think the referee was correct, and as to this item we see no error in the result.

[200]

With respect to the third counterclaim set up in the answer, the referee found that the plaintiff did sell the fifty shares of "Ophir" stock mentioned therein, on the 22d day of November, 1877, as reported by him to the defendant. Consequently, the referee correctly found that the defendant was not entitled to any damages on that account, as no dissatisfaction with the sale was expressed by the defendant at the time. We see no error in this conclusion.

It has been assumed, in the consideration of the case, that the measure of damages in stock transactions of this kind is the highest intermediate value reached by the stock between the time of the wrongful act complained of and a reasonable time thereafter, to be allowed to the party injured to place himself in the position he would have been in had not his rights been violated. This rule is most frequently exemplified in the wrongful conversion by one person of stocks belonging to another. To allow merely their value at the time of conversion would, in most cases, afford a very inadequate remedy; and, in the case of a broker, holding the stocks of his principal, it would afford no remedy at all. The effect would be to give to the broker the control of the stock, subject only to nominal damages. The real injury sustained by the principal consists not merely in the assumption of control over the stock, but in the sale of it at an unfavorable time, and for an unfavorable price. Other goods wrongfully converted are generally supposed to have a fixed market value at which they can be replaced at any time; and hence, with regard to them, the ordinary measure of damages is their value at the time of conversion, or, in case of sale and purchase, at the time fixed for their delivery. But the application of this rule to stocks would, as before said, be very inadequate and unjust.

The rule of highest intermediate value as ap-

plied to stock transactions has been adopted in England and in several of the States in this country; whilst in some others it has not obtained. The form and extent of the rule have [201] been the subject of much discussion and conflict of opinion. The cases will be found collected in Sedgwick on the Measure of Damages [479], Vol. 2, 7th ed. p. 379, note (b); Mayne, Damages, 83 (92 Law Lib.); 1 Sm. Lead. Cas. 7th Am. ed. 367. The English cases usually referred to are *Cud* v. *Rutter*, 1 P. Wms. 572, 4th ed. note (3); *Owen* v. *Routh*, 14 C. B. 327; *Loder* v. *Kekulé*, 3 C. B. N. S. 128; *France* v. *Gaudet*, L. R. 6 Q. B. 199. It is laid down in these cases that where there has been a loan of stock and a breach of the agreement to replace it, the measure of damages will be the value of the stock at its highest price on or before the day of trial.

The same rule was approved by the Supreme Court of Pennsylvania in *Bank of Montgomery* v. *Reese*, 2 Casey (26 Pa.) 143, and *Musgrave* v. *Beckendorff*, 3 P. F. Smith (53 Pa.) 310. But it has been restricted in that State to cases in which a trust relation exists between the parties —a relation which would probably be deemed to exist between a stock broker and his client. See *Wilson* v. *Whitaker*, 13 Wright (49 Pa.) 114; *Huntingdon & B. T. R. & Coal Co.* v. *English*, 86 Pa. 247.

Perhaps more transactions of this kind arise in the State of New York than in all other parts of the country. The rule of highest intermediate value up to the time of trial formerly prevailed in that State, and may be found laid down in *Romaine* v. *Van Allen*, 26 N. Y. 309, and *Markham* v. *Jaudon*, 41 N. Y. 235, and other cases, —although the rigid application of the rule was deprecated by the New York Superior Court in an able opinion by *Judge* Duer, in *Suydam* v. *Jenkins*, 3 Sandf. 614. The hardship which arose from estimating the damages by the highest price up to the time of trial, which might be years after the transaction occurred, was often so great that the Court of Appeals of New York was constrained to introduce a material modification in the form of the rule, and to hold the true and just measure of damages in these cases to be the highest intermediate value of the stock between the time of its conversion and a reasonable time after the owner has received notice of it to enable him to replace the stock. This modification of the rule [202] was very ably enforced in an opinion of the court of appeals delivered by *Judge* Rapallo, in the case of *Baker* v. *Drake*, 53 N. Y. 211, which was subsequently followed in the same case in 66 N. Y. 518, and in *Gruman* v. *Smith*, 81 N. Y. 25; *Colt* v. *Owens*, 90 N. Y. 368, and *Wright* v. *Bank of Metropolis*. 110 N. Y. 237 [13 Cent. Rep. 415].

It would be a herculean task to review all the various and conflicting opinions that have been delivered on this subject. On the whole it seems to us that the New York rule, as finally settled by the court of appeals, has the most reasons in its favor, and we adopt it as a correct view of the law.

The judgment is reversed, and the cause remanded to the Supreme Court of Utah, with instructions to enter judgment in conformity with this opinion.

WILLIAM W. WADE, *Appt.*, [202]

v.

HENRY B. METCALF ET AL.

(See S. C. Reporter's ed. 202-206.)

Patent law—right to use machine constructed before patent granted.

1. After a machine has been constructed by any person, with the inventor's knowledge and consent, before the application for a patent, every other person who either sells or uses that machine is within the protection of section 4899 of the Revised Statutes, and needs no new consent or permission of the inventor.

2. That section sets the specific machine, so constructed, free from the monopoly of the patent in the hands of any person who sells or uses it just as if that person was the lawful assignee of one holding the machine under a purchase or an express and unrestricted license from the inventor.

[No. 163.]

Argued Jan. 10, 1889. Decided Jan. 21, 1889.

APPEAL from a decree of the Circuit Court of the United States for the District of Massachusetts, dismissing a suit in equity for infringement of letters patent No. 228,233, granted June 1, 1880, for improvements in machines for making buttons. *Affirmed.*

Reported below, 16 Fed. Rep. 130.

Statement by *Mr. Justice* **Gray**:

This was a bill in equity, filed December 4, 1880, by William W. Wade, a citizen of Massachusetts, against Henry B. Metcalf, a citizen of Rhode Island, and William McCleery, a citizen of Massachusetts, alleging that letters patent, numbered 228,233, granted to the plaintiff June 1, 1880, upon his application filed July 26, 1879, for improvements in machines for [203] making buttons, had been infringed by the defendants' use of forty-eight machines embodying such improvements. At the hearing upon pleadings and proofs, the case, so far as it is material to be stated, appeared to be as follows:

The parties to this suit, owning earlier patents for improvements in buttons, were in partnership in the business of making and selling buttons, under the name of the Boston Button Company, from January, 1875, until the dissolution of the partnership in October, 1880. By the copartnership agreement, certain salaries were to be paid to the plaintiff for improving and developing the machinery, to the defendant Metcalf for assistance in financial matters, and to the defendant McCleery for general superintendence; and the profits of the business were to belong one half to Metcalf and one fourth each to the plaintiff and McCleery. The forty-eight machines, with the improvements in question, were constructed by the partnership, with the knowledge and consent of the plaintiff, before the application for the patent sued on, and were used by the partnership during its continuance, and by the defendants after its dissolution. The partnership was dissolved October 30, 1880, by an agreement in writing executed by the three partners, the terms of which were as follows:

"*First.* It is agreed that the firm composed of said Metcalf, McCleery and Wade, and doing business under the style of the Boston Button Company, shall be this day dissolved.

"*Second.* The said William W. Wade, in consideration of the payment to him of the sum of twelve thousand dollars by the said Metcalf and McCleery, receipt of which is hereby acknowledged, hereby sells and conveys to the said Metcalf and McCleery all his interest in the property and assets of every name and nature of said firm of the Boston Button Company, together with the good will of the same, with authority to use his name if necessary in the premises, saving him harmless from all costs in the same.

"And whereas, certain machines, forty-eight in number, with a certain improvement thereon, manufactured by said firm, have been and are now in use by said firm, and the same Metcalf and McCleery claim the right as members of said firm, by virtue of the manufacture and [204] use by said firm of said machines with said improvements, to continue such use, and the said Wade reserves the right to deny such claim:

"Therefore, nothing in this sale and conveyance shall operate as an assent on the part of said Wade to the right to use said improvements upon said machines, or as granting any rights for such use, other than said Metcalf and McCleery now have, whatever they may be; and nothing in this reservation shall be construed to lessen or impair any rights which the said Metcalf and McCleery may have to such use.

"It being further understood that each party shall have the right to manufacture and use machines under patents for improvements in buttons, one dated March 23, 1869, and numbered 88,099, and one dated April 27, 1869, and numbered 89,450; but neither party shall vend to others the right to use or manufacture under said patents without mutual consent, except as the same may be necessary in the reorganization or liquidation of their own business.

"The said Metcalf and McCleery hereby assume the payment of the debts of said Boston Button Company, and agree to indemnify and save harmless the said Wade therefrom."

The circuit court dismissed the bill. 16 Fed. Rep. 130. The plaintiff appealed to this court.

Mr. **George F. Betts,** for appellant:

Defendants failed to establish that the invention had been in public use for more than two years before application for the patent.

The burden of proof is on the defendants to establish this defense.

Washburn & M. Mfg. Co. v. *Haish*, 10 Biss. 65; *Adams & W. Mfg. Co.* v. *Rathbone*, 26 Fed. Rep. 262; *Birdsall* v. *McDonald*, 1 Bann. & Ard. 165; *McCormick* v. *Seymour*, 2 Blatchf. 256; *Comstock* v. *Sandusky Seat Co.* 3 Bann. & Ard. 188.

These facts show the use not to have been public.

Elizabeth v. *Nicholson Pavement Co.* 97 U. S. 134 (24:1004); *Jennings* v. *Pierce*, 15 Blatchf. 42; *Sinclair* v. *Backus*, 5 Bann. & Ard. 81; *Sprague* v. *Smith & G. Mfg. Co.* 12 Fed. Rep. 721.

The defendants must show that the use was of the combined improvements as patented.

Draper v. *Wattles*, 3 Bann. & Ard. 621; *Graham* v. *McCormick*, 10 Biss. 42.

Any claim of the defendants to any interest in the patent would be untenable.

Hapgood v. *Hewitt*, 119 U. S. 227 (30:370); *McWilliams Mfg. Co.* v. *Blundell*, 11 Fed. Rep. 419; *Burr* v. *De la Vergne*, 102 N. Y. 415, 3 Cent. Rep. 423.

Section 4899, R. S., only gives protection to the person who purchases the machine from the inventor, or who constructs it with his knowledge and consent prior to his application for a patent.

That the protection given to *the person* under this section is that of an implied license, seems to be clearly established.

Kendall v. *Windsor*, 62 U. S. 21 How. 322 (16: 165); *Bloomer* v. *Millinger*, 68 U. S. 1 Wall. 340 (17: 581); *Black* v. *Hubbard*, 3 Bann. & Ard. 39; *Am. Tube Works* v. *Bridgewater Iron Co.* 26 Fed. Rep. 334; *Chabot* v. *Am. Buttonhole & O. Co.* 6 Fish. Pat. Cas. 71; *Herman* v. *Herman*, 29 Fed. Rep. 92.

Rights to use and to vend are the only rights given by the statute, or that can be properly inferred from the acts of the parties.

Curran v. *Craig*, 22 Fed. Rep. 101; *Montross* v. *Mabie*, 30 Fed. Rep. 237; *Brooks* v. *Byam*, 2 Story, 525; *Consolidated Fruit Jar Co.* v. *Whitney*, 1 Bann. & Ard. 356.

When, as in this case, the patent is for a machine the implied license is only to use and vend the specific machines.

Keller v. *Stolzenbach*, 20 Fed. Rep. 49; *Brickill* v. *N. Y.* 7 Fed. Rep. 479; *Magoun* v. *N. E. Glass Co.* 3 Bann. & Ard. 114; *Wilkens* v. *Spafford*, Id. 274.

The defendants, being only two out of three members of the firm, cannot claim the right to continue to use this partnership property as their own, after the dissolution of the firm.

Lindley, Partn. 554, 587; 1 Schouler, Pers. Prop. §§ 189, 193; *Bell* v. *Morrison*, 26 U. S. 1 Pet. 351 (7: 174); *Rogers* v. *Batchelor*, 37 U. S. 12 Pet. 221 (9: 1063).

The mere sale of an article by the patentee does not necessarily carry with it the license to use, unless such sale is unqualified.

Porter Needle Co. v. *Nat. Needle Co.* 17 Fed. Rep. 536.

The use of the article purchased may be restricted or withheld to any extent that the parties to the sale may agree, and the only question is; What is the contract?

Providence Rubber Co. v. *Goodyear*, 76 U. S. 9 Wall. 788 (19: 566); *Mitchell* v. *Hawley*, 83 U. S. 16 Wall. 544 (21: 322); *Consolidated Fruit Jar Co.* v. *Whitney*, 1 Bann. & Ard. 356; *Wicks* v. *Kleinknecht*, Id. 608; *Searls* v. *Bouton*, 20 Blatchf. 426, 429; *Gibbs* v. *Hoefner*, 22 Blatchf. 36.

Messrs. **Edward W. Hutchings,** and *Henry Wheeler*, for appellees:

The defendants have the right, under section 4899 R. S. to use the forty-eight machines with the improvements thereon.

Pennock v. *Dialogue*, 27 U. S. 2 Pet. 1 (7:327); *McClurg* v. *Kingsland*, 42 U. S. 1 How. 202 (11: 102); *Chabot* v. *Am. Buttonhole & O. Co.* 6 Fish. Pat. Cas. 71; *Bloomer* v. *McQuewan*, 55 U. S. 14 How. 539 (14: 532); *Mitchell* v. *Hawley*, 83 U. S. 16 Wall. 544 (21: 322); *Duffy* v. *Reynolds*, 24 Fed. Rep. 855; *Keller* v. *Stolzenbach*, 20 Fed. Rep. 47; *Wade* v. *Metcalf*, 16 Fed. Rep. 131; *Montross* v. *Mabie*, 30 Fed. Rep. 237; *Barry* v. *Crane Brothers Mfg. Co.* 22 Fed. Rep. 396; *Wilkens* v. *Spafford*, 3 Bann. & Ard. 274; *Am. Tube Works* v. *Bridgewater Iron Co.* 26 Fed. Rep 334.

Mr. Justice **Gray** delivered the opinion of the court:

The decision of this case turns upon section 4899 of the Revised Statutes, by which it is enacted that "Every person who purchases of the inventor or discoverer, or with his knowledge and consent constructs any newly invented or discovered machine or other patentable article, prior to the application by the inventor or discoverer for a patent, or who sells or uses one so constructed, shall have the right to use [205] and vend to others to be used the specific thing so made or purchased, without liability therefor."

This section clearly defines four classes of persons who shall have the right to use, and to vend to others to be used, a specific patentable machine:

First. Every person "who purchases of the inventor" the machine before his application for a patent.

Second. Every person who "with his knowledge and consent constructs" the machine before the application.

Third. Every person "who sells" a machine "so constructed," that is to say, which has been constructed with the knowledge and consent of the inventor by another person.

Fourth. Every person who "uses one so constructed," that is to say, constructed with the inventor's knowledge and consent by another person.

In order to entitle a person of any of these four classes to use and vend the machine, under this section, the machine must originally have been either purchased from the inventor, or else constructed with his knowledge and consent, before his application for a patent; and it may well be that a fraudulent or surreptitious purchase or construction is insufficient. *Kendall* v. *Winsor*, 62 U. S. 21 How. 322 [16:165]; *Andrews* v. *Hovey*, 124 U. S. 694, 708 [31:557, 560].

But after a machine has been constructed by any person with the inventor's knowledge and consent before the application for a patent, every other person who either sells or uses that machine is within the the protection of the section, and needs no new consent or permission of the inventor.

If the first two clauses of the section, taken by themselves, leave the matter in any doubt, the succeeding clause, including every person "who sells or uses one so constructed," makes it perfectly clear that the implied license conferred by the section sets the specific machine free from the monopoly of the patent in the hands of any person, just as if that person were the lawful assignee of one holding the machine under a purchase or an express and unrestricted license from the inventor. *McClurg* v. *Kingsland*, 42 U. S. 1 How. 202 [11:102]; *Bloomer* v. *McQuewan*, 55 U. S. 14 How. 539, 549 [14:532]; *Bloomer* v. *Millinger*, 68 U. S. 1 Wall. 340 [17:581]; *Adams* v. *Burke*, 84 U. S. 17 Wall. 453 [21:700]; *Birdsell* v. *Shaliol*, 112 U. S. 485, 487 [28:768, 769].

[206] In the case at bar, the machines of the plaintiff's invention were not purchased from him by the defendants. But they were constructed with his knowledge and consent by a partnership, of which he and the defendants were the members. It was strongly argued for the defendants, that a sale or a license from the inventor to two or more partners or tenants in common confers upon each a right to use and to sell the subject of the sale or license, and that the defendants, therefore, come within the second class of persons defined in the statute. But it is unnecessary to determine whether that is so or not, because if it is not, the defendants clearly come within the fourth class, being persons who use machines which have been constructed with the knowledge and consent of the inventor before his application for a patent.

The peculiar provisions of the agreement by which the partnership between the plaintiff and the defendants was dissolved did not, in terms or in legal effect, enlarge or diminish the rights of either party, independently of that agreement, in the machines in question.

Decree affirmed.

JONATHAN Q. BARTON, *Appt.*, [249]

v.

UNITED STATES.

(See S. C. Reporter's ed. 249-252.)

Paymaster in navy—additional pay—Act of 1883.

1. Under the Acts of August 5, 1882, and March 3, 1883, a paymaster in the navy is not entitled to allowance for the sum which he would have received had he entered the regular navy when he entered the volunteer navy; and had he been promoted from time to time under the rule of promotion provided by sections 1380, 1458 and 1496 of the Revised Statutes and previous statutes embodied therein.

2. An officer, thus situated, while denied rank and commissions under the statutes, has not the right to the pay of the several grades he might have reached if his appointment in the regular navy is treated as having been made at the date of his entry into the volunteer navy.

3. The Act of 1883 deals with credit for length of service and the additional pay which arises therefrom, and not with the matter of regular salary, and has no reference to benefits derived from promotion to different grades, but is confined to the lowest grade having graduated pay.

[No. 1184.]

Submitted Jan. 2, 1889. Decided Jan. 21, 1889.

APPEAL from a judgment of the Court of Claims, dismissing a petition of a paymaster in the navy for additional pay. *Affirmed.*

The facts are stated in the opinion.

Mr. **Geo. S. Boutwell** for appellant.

Messrs. **A. H. Garland,** *Atty-Gen.*, **R. A. Howard,** *Assist. Atty-Gen.*, and **F. P. Dewees,** *Assist. Atty.*, for the United States, appellee.

Mr. Chief Justice **Fuller** delivered the opinion of the court:

This is an appeal from a judgment of the Court of Claims finding in favor of the United States, and dismissing the petition of the claimant, Barton.

The findings of fact and conclusion of law were as follows:

"I. The claimant was appointed acting assistant paymaster in the volunteer navy of the United States, January 30, 1864; assistant paymaster, March 2, 1867; passed assistant paymaster, February 10, 1870; and paymaster in the regular navy, May 29, 1882. He has been

continuously in the navy from his first appointment to the present time.

"II. He has received the salary and graduated or longevity pay allowed by the Act of July 17, 1861 (12 Stat. at L. 258), and the Act of March 2, 1867, chap. 197, § 3 (14 Stat. at L. 516, now R. S. 1412), and the benefit of all laws in force during the time he has held the offices mentioned in the preceding finding, except that he has received no additional benefits [250] under the Acts of August 5, 1882, chap. 391 (22 Stat. at L. 287), and March 3, 1883, chap. 97 (22 Stat. at L. 473).

"III. If he be entitled under said last mentioned Acts of 1882 and 1883 to allowance for the sums which he would have received had he entered the regular navy when he entered the volunteer navy, and had he been promoted from time to time, under the rule of promotion provided by the Revised Statutes, §§ 1380, 1458, 1496, and the previous statutes embodied therein, the defendant would be indebted to him to an amount which, for reasons which appear in the opinion, we do not compute.

"*Conclusion of Law.*

"Upon the foregoing findings of fact the court decides, as a conclusion of law, that the claimant is not entitled to recover, and his petition must be dismissed."

The Acts of Congress of 1882 and 1883 read thus:

"And all officers of the navy shall be credited with the actual time they have served as officers or enlisted men in the regular or volunteer army or navy, or both, and shall receive all the benefits of such actual service in all respects in the same manner as if all said service had been continuous and in the regular navy; *Provided*, That nothing in this clause shall be so construed as to authorize any change in the dates of commissions or in the relative rank of such officers." (August 5, 1882, chap. 391, 22 Stat. at L. 287.)

"And all officers of the navy shall be credited with the actual time they may have served as officers or enlisted men in the regular or volunteer army or navy, or both, and shall receive all the benefits of such actual service in all respects in the same manner as if all said service had been continuous and in the regular navy, *in the lowest grade having graduated pay held by such officer since last entering the service;* Provided, That nothing in this clause shall be so construed as to authorize any change in the dates of commissions or in the relative rank of such officers; *Provided, further, That nothing herein contained shall be so construed as to give any additional pay to any such officer during the time of his service in the volunteer army or navy.*" (March 3, 1883, chap. 97, 22 Stat. at L. 473.)

[251] Under the provisions of the Act of July 17, 1861, entitled "An Act to Provide for the Appointment of Assistant Paymasters in the Navy" (12 Stat. at L. 258), assistant paymasters were entitled to receive graduated pay. And under the provisions of section 3 of the Act of March 2, 1867 (14 Stat. at L. 516, R. S. § 412), Barton received a credit as assistant paymaster for three years and thirty-one days' service in the volunteer navy as acting assistant paymaster, and his second five years' service in the regular navy commenced after the expiration of the five years preceding, including therein the volunteer service; and he has consequently received all the benefits, under the Longevity Pay Acts, of his whole service, "as if all such service had been continuous and in the regular navy."

But he contends that if he had been appointed in the regular navy January 30, 1864, he would have been promoted from time to time earlier than he was, and that he is entitled to pay in the several grades of service as if he had received such earlier promotion. And by his petition he claims that the difference between what he has received and what he would have received if he had been commissioned as assistant paymaster January 30, 1864, when he entered the volunteer navy, amounts to $7,672.40, made up of the differences of pay in the several grades if he had attained them as early as he believes he would if his service had commenced in the regular navy.

The argument is that under the Act of 1883, which amended and superseded that of 1882, officers so situated as Barton, while denied rank and commissions under the statute, have the right to the pay of the several grades they might have reached if their appointments in the regular navy are treated as having been made at the date of their entry into the volunteer service.

We cannot concur in this interpretation of the Act, which, in our opinion, deals with credit for length of service and the additional pay which arises therefrom, and not with the matter of regular salary, and has no reference to benefits derived from promotion to different grades, but is confined to the lowest grade having graduated pay.

It was upon this view that it was held in *United States* v. *Rockwell*, 120 U. S. 60 [30:561], [252] that the effect of the Act was to lengthen the time of service in the lowest grade having graduated pay by crediting all previous services for the purpose only of increasing longevity pay in that grade.

It follows that the Court of Claims was right in its conclusion in the premises; and we need not enter upon the consideration of what the learned Chief Justice of that court correctly terms "the complicated problem of promotion which he (Barton) might have had, involving, as it does, the promotion of many other officers above and below him in rank, who would in like manner be affected by the provisions of the statute, and whose promotion, dependent upon previous service not found in this case, would materially affect his own."

The judgment appealed from is affirmed.

ERASTUS F. BROWN ET AL., EXRS., *Appts.*, [238]
v.
SARAH S. UTTON.

(See S. C. Reporter's ed. 238-243.)

Verbal promise to convey land—payment of consideration—specific performance.

Where one purchased and took the title of land in his own name but with the intention and under the verbal promise to convey it to another, upon

consideration that she should take care of him during the remainder of his life, as she had done in the past, and places her in possession of the property, and she does so take care of him during his life, she is entitled to a specific performance of the promise and to a conveyance of the title to her, after his death, by his executors and trustees.

[No. 97.]

Argued Nov. 26, 1888. Decided Jan. 28, 1889.

APPEAL from a decree of the Circuit Court of the United States for the Eastern District of Wisconsin, in a suit for specific performance of a verbal contract and for the conveyance of the title, that plaintiff was entitled to the property and that defendants should conconvey to her. *Affirmed.*

The facts are stated in the opinion.

Messrs. **Erastus P. Brown,** and *Edgar K. Brown,* for appellants:

The possession which must accompany the parol agreement, to save it from the statute, must be open, notorious, exclusive and continued.

Purcell v. *Miner,* 71 U. S. 4 Wall. 518 (18:435); *Williams* v. *Morris,* 95 U. S. 444–456 (24:360–362); Browne, Frauds, §§ 472–474, 485; *Brawdy* v. *Brawdy,* 7 Pa. 157; *Blakeslee* v. *Blakeslee,* 22 Pa. 237; *Moore* v. *Small,* 19 Pa. 461; *Haslet* v. *Haslet,* 6 Watts, 464; *Chadwick* v. *Felt,* 35 Pa. 305; *Washabaugh* v. *Entriken,* 36 Pa. 513; *Allen's Est.* 1 Watts & S. 383; *Johnston* v. *Glancy,* 4 Blackf. 94; *Frye* v. *Shepler,* 7 Pa. 91; *Blanchard* v. *McDougal,* 6 Wis. 167; *Knoll* v. *Harvey,* 19 Wis. 99; *Detrick* v. *Sharrar,* 95 Pa. 521; *Smith* v. *Finch,* 8 Wis. 245; *Littlefield* v. *Littlefield,* 51 Wis. 23; *Tiernan* v. *Gibney,* 24 Wis. 190; *Colson* v. *Thompson,* 15 U. S. 2 Wheat. 336 (4:253); *Neale* v. *Neale,* 76 U. S. 9 Wall. 1 (19:590.)

The declaration of an intention to give is not a gift. The indispensable essentials are a delivery to the donee and loss of dominion by the donor.

Geary v. *Page,* 9 Bosw. 297.

Conduct is stronger to point the truth than the uncertain recollections of strangers as to conversations.

Semmes v. *Worthington,* 38 Md. 298; *Shellhammer* v. *Ashbaugh,* 83 Pa. 24; *Gerry* v. *Howe,* 130 Mass. 350; *Chalker* v. *Chalker,* 5 Redf. 480; *Hoar* v. *Hoar,* 5 Redf. 637; *Alderson* v. *Maddison,* L. R. 7 Q. B. Div. 174; L. R. 5 Exch. Div. 293.

Messrs. **Winfield Smith** and **Edwin Hurlbut,** for appellee:

The intention of a party may be gathered from his acts and declarations.

West v. *Bundy,* 78 Mo. 407; *Chadwick* v. *Fonner,* 69 N. Y. 404; *Littlefield* v. *Littlefield,* 51 Wis. 23.

In a court of equity part performance of a parol contract for the conveyance of lands may take the contract out of the Statute of Frauds, and render it capable of being enforced by way of specific performance.

Fry, Spec. Perf. §§ 383, 385, 386; 1 Story, Eq. Jur. § 759.

The promisee having performed all, and the promisor having performed a part, of the contract, it is thereby taken out of the Statute of Frauds.

Bigelow v. *Armes,* 108 U. S. 10 (27:631).

In Wisconsin, part performance, consisting of payment of part of the consideration, taking possession, and making improvements on the premises, takes the case out of the statute.

Blanchard v. *McDougal,* 6 Wis. 170; *School Dist. No. 3* v. *Macloon,* 4 Wis. 79; *Fisher* v. *Moolick,* 13 Wis. 321; *Ingles* v. *Patterson,* 36 Wis. 373; *Seaman* v. *Aschermann,* 51 Wis. 678; *Daniels* v. *Lewis,* 16 Wis. 141; *Paine* v. *Wilcox,* 16 Wis. 202; *Thrall* v. *Thrall,* 60 Wis. 503.

Part performance of a parol contract for the conveyance of land is sufficient in England, and in nearly all the States of the Union, to take the agreement out of the Statute of Frauds.

Lester v. *Foxcroft,* 1 Colles, P. C. 108; 1 Lead. Cas. Eq. *768; *Parkhurst* v. *Van Cortland,* 14 Johns. 15; *Annan* v. *Merritt,* 13 Conn. 479; *Newton* v. *Swazey,* 8 N. H. 9; *Farrar* v. *Patton,* 20 Mo. 81; *Grant* v. *Ramsey,* 7 Ohio St. 157; *Cannon* v. *Collins,* 3 Del. Ch. 182; *Winchell* v. *Winchell,* 100 N. Y. 159, 1 Cent. Rep. 235; *Green* v. *Jones,* 76 Maine, 563; *Shuman* v. *Willets,* 17 Neb. 478; *Burns* v. *Fox,* 113 Ind. 205, 12 West. Rep. 117; *Woodbury* v. *Gardner,* 77 Maine, 68; *Anderson* v. *Shockley,* 82 Mo. 250; *Bowman* v. *Wolford,* 80 Va. 213.

The plaintiff's possession was not defeated by Mr. Kenyon's presence on the premises.

Warren v. *Warren,* 105 Ill. 568; *McDowell* v. *Lucas,* 97 Ill. 489; *Drum* v. *Stevens,* 94 Ind. 181; *McClure* v. *Otrich,* 118 Ill. 320, 6 West. Rep. 65; *Hibbert* v. *Aylott,* 52 Tex. 530.

An uncertainty as to the time when the deed shall be executed and delivered will not defeat the promise.

Lamb v. *Hinman,* 46 Mich. 112.

A promise or obligation cannot be defeated on the ground of the inadequacy of the compensation.

Oakley v. *Boorman,* 21 Wend. 588.

Therefore, if the consideration be less than the value of the land, it does not alter the rule granting specific performance.

Losee v. *Morey,* 57 Barb. 561; *Ottumwa etc. R. Co.* v. *McWilliams,* 71 Iowa, 164; *Smith* v. *Yocum,* 110 Ill. 142; *Langston* v. *Bates,* 84 Ill. 524; *Kurtz* v. *Hibner,* 55 Ill. 514; *Bright* v. *Bright,* 41 Ill. 97; *Rink* v. *Sample,* 56 Iowa, 100; *Neel* v. *Neel,* 80 Va. 584.

An agreement to support or render services, as a consideration for a verbal promise to convey lands, if carried out, is such a definite performance of the contract as entitles the promisee to a conveyance of the premises.

Hiatt v. *Williams,* 72 Mo. 214; *Rhodes* v. *Rhodes,* 3 Sandf. Ch. 279; *Davison* v. *Davison,* 13 N. J. Eq. 246; *Haines* v. *Spanogle,* 17 Neb. 637; *Wendell* v. *Stone,* 39 Hun, 382.

Even a parol gift of land is protected in equity, equally with a parol agreement to sell it —if accompanied by possession, and the donee, induced by the promise to give it, has made valuable improvements on the property.

Neale v. *Neale,* 76 U. S. 9 Wall 1 (19:590); *Dawson* v. *McFaddin,* 22 Neb. 131; *Anson* v. *Townsend,* 73 Cal. 415; *Irwin* v. *Dyke,* 114 Ill. 302; *Freeman* v. *Freeman,* 51 Barb. 306; 43 N. Y. 34; *Halsey* v. *Peters,* 79 Va. 60; *Whitsitt* v. *Preëmption Presby. Church,* 110 Ill. 125; *Bohanan* v. *Bohanan,* 96 Ill. 591; *Welch* v. *Whelpley,* 62 Mich. 15; *Hunt* v. *Hayt,* 10 Col. 278; *Vanduyne* v. *Vreeland,* 12 N. J. Eq. 142.

An agreement by aged persons to will their property to one who would, in consideration of that promise, take care of them until death, was upheld in *Gupton* v. *Gupton*, 47 Mo. 37; *Sutton* v. *Hayden*, 62 Mo. 101; and *Watson* v. *Mahan*, 20 Ind. 223.

[239] *Mr. Justice* **Miller** delivered the opinion of the court:

The bill was brought by Sarah S. Sutton, the appellee, against Erastus F. Brown and Francis A Kenyon, executors of the last will of John S. Kenyon, and was in the nature of a suit for specific performance of a contract and for the conveyance of the title to a certain house and grounds in the City of Oconomowoc, in Wisconsin. There was no written agreement on the subject; but the suit is based upon the idea of a verbal promise or agreement upon the part of John S. Kenyon in his lifetime that he would convey the property to Mrs. Sutton, the appellee, and that such part performance had been had in its execution as to bring the case within the exception made by that doctrine in the requirement of the Statute of Frauds that the sale of lands must be in writing.

The executors and trustees under the will filed their answer, denying the existence of any verbal promise at all, and also denying that it was so far performed as to justify a decree. The court, however, rendered a decree in favor of Mrs. Sutton, that she was entitled to the property, and that the defendants in the action [240] should convey to her. It is from this decree that the present appeal is taken.

A history of the relations of the testator, John S. Kenyon, to Mrs. Sutton and her husband, is essential to a correct decision of the case. The following facts regarding them are in the main undisputed by either party

In 1868 Mr. Kenyon lived with his wife in Harlem, in the City of New York; was a man of some wealth, an officer of a bank in Harlem, and at his death left an estate of nearly $200,000. He was without children or close kin in whom he was much interested, as was shown by his will, in which, after having made some slight provisions for some of his sisters, he devised the great bulk of his fortune to fifteen charitable and religious societies or associations. The father of Mrs. Sutton lived in New York and Brooklyn, and she had been intimate with Mr. Kenyon since her birth—being at the time of the trial about forty-four years old. Prior to 1868 she married Charles T. Sutton, and ever since lived with him as his wife, but had no children. The wife of Mr. Kenyon was for a very considerable period, certainly from 1868 to 1872, when she died, an invalid, requiring much care and attention. Mrs. Sutton spent a large part of her time, both before and after the date first mentioned, with her, assisting in the care of her during sickness. In 1868 Mr. Kenyon and his wife visited Oconomowoc, at the house of George F. Westover, whose wife was a sister of Mrs. Sutton. Thereafter the Kenyons removed to Tremont, near New York City, where Mrs. Kenyon died in February, 1872. During a large part of this time, and at her death, Mrs. Sutton was with her. Shortly after her decease, Mr. Kenyon and Mr. and Mrs. Sutton went to Oconomowoc together, lived in the family of Westover, paying therefor a consideration, and so continued until April, 1874, except a few weeks, when Mr. Kenyon was absent. Westover then removed to Chicago, and on the 28th of that month Kenyon bought a cottage in the Village of Oconomowoc, and lived in it with the Suttons, who kept the house. On July 1, 1874, Kenyon made a deed of this cottage to Mrs. Sutton, declaring it to be in accordance with the request of his wife during her lifetime, as a tribute from her to Mrs. Sutton. For several years [241] these three continued living together in that cottage, Kenyon making certain contributions for board, or as his quota towards the expenses of housekeeping. During these years he made frequent trips to New York on business connected with the bank of which he was a shareholder and probably a director, being absent from several weeks to three months at a time. While in New York in 1879, upon one of these visits, he made a will, in which, after disposing of several small items of personal property, giving to Mrs. Sutton all the personal property in her house at Oconomowoc, except his jewels and the interest during her life on one third of $10,000, and to his sisters some slight bequests of jewelry and furniture, the body of his estate was bequeathed to his executors as trustees for the associations referred to. In November, 1879, the Suttons closed the cottage and spent the winter in New York, in a house belonging to Mr. Kenyon and furnished by him, the family consisting of the same three persons and one servant. Thereafter they seem to have vibrated for a year or two between the house in New York and the cottage in Oconomowoc, always living together as one family. In September, 1880, Mr. Kenyon bought, for the consideration of $2,800, the premises in dispute in this action, known as the "Oaks," situated in Oconomowoc, and in 1881 began the erection thereon of a large dwelling house. Late in the fall of 1881 he went with the Suttons again to New York, and they all resided together as usual in his house, until he was stricken with apoplexy, and died in January following.

The bill alleges that the property called The Oaks was bought by Mr. Kenyon for Mrs. Sutton; that he had promised to buy it for her as a consideration for the services rendered to him, and to be thereafter performed, in keeping house for him and giving him her care and society, and that he also agreed to build thereon a new house, of sufficient dimensions to accommodate others besides these three who lived together as a family, so that if the necessity should arise, in the event of Mr. Kenyon's death, she might be enabled to make a living by keeping boarders. It is claimed that the land was bought and the house built in accordance with this promise, [242] or at least that it was in progress of erection at the time of his death. A definite promise on his part to do this is asserted, the consideration for which was sufficient in what she had already done and had agreed thereafter to do for him. Mr. and Mrs. Sutton were placed in possession of the premises as soon as the purchase was made, and they were living there at the time the present suit was brought.

The controversy in the present case is really whether any such promise or agreement was made; because if it was there can be little doubt

that the delivery of possession to the Suttons, and the construction of this house under their direction and control, is a sufficient part performance to take the case out of the Statute of Frauds.

As Mrs. Sutton was not competent as a witness to establish a promise on the part of Mr. Kenyon to convey the property to her, under section 858 of the Revised Statues, and as Mr. Sutton, being her husband, was also incompetent, it can be readily seen, in the absence of any written agreement upon the subject or any correspondence between the parties, which could not reasonably be expected to exist as they were nearly always living together, that it is almost impossible to prove a direct verbal promise from Mr. Kenyon to her in regard to that matter. Any such promise must be largely inferred from the situation and circumstances of the parties, and must depend almost wholly on verbal statements made by Mr. Kenyon to others.

The depositions in the case contain full and ample evidence of the declarations of Mr. Kenyon on this subject. They are in substance, that he had bought the property for Mrs. Sutton; that he had given it to her, had placed her in possession of the ground, and was building a house upon it for her at the time of his death; and that he treated her and her husband as, and frequently called them, his "children," or "the children."

There can be no question that Mr. Kenyon bought the property in dispute with the intention, clear and well defined in his own mind, that he was buying it for Mrs. Sutton; and when he came to build the house upon it there [243] can be as little doubt that he erected it for her with the intention that it should be her house, expecting to live with the Suttons as long as he lived, and that it would go to her in the event of his dying before she did. It may be said, and it is true, that this unexecuted purpose of his is not of itself sufficient to constitute a contract to convey to her the house, nor would it alone be a sufficent foundation for a decree; but it leaves the case in such a position that no very strong evidence is required that such a contract did exist, as it would be entirely consistent with all the other uncontradicted testimony in regard to what he had said and done and with the possession of the property by her. There is also quite a sufficient consideration for such a promise in the services, care and attention rendered by her to an old man in his declining years, in connection with the fact that at the time he bought this property he was very sure of receiving these attentions as long as he lived. The evidence shows that this expectation on his part was fully realized. Let us examine briefly the positive evidence of a promise on this subject.

We have the testimony of Mr. Westover, whose relation to Mr. Kenyon and the family has already been noted, in whose house they lived for two summers prior to his removal to Chicago, and who seems to have been on intimate terms with Mr. Kenyon, that he had many conversations with him about his private matters, although he was not a man who talked generally about his affairs. He states that Mr. Kenyon was not well, and never was well, since he first went to Oconomowoc; that he was a pretty old man, at least old enough to be Mrs. Sutton's father, and probably older than her own father was; that he needed a great deal of nursing, and wanted more care and attention when near her in the little details of life than any man he ever saw; that he seemed to dread to be alone, and in fact she went everywhere with him, and devoted the most of her life during those years to him as a daughter to a father. [244] He says: "She filled the place that an exceedingly attentive daughter would to a weak, sickly, old father. I never saw a case in a family of more marked service in that line than was that case. No person but Mrs. Sutton was relied upon to look after his personal wants at all."

The witness then went on to state a conversation that he had with Mr. Kenyon about his affairs, in which he said of his relatives: "All they want of me is my money; some day they will be terribly disappointed;" and proceeded to say that no one had filled the place of a relative to him as had Mrs. Sutton; that he was under great obligations to her, and how to discharge it, to repay her, or attempt to repay her, was something that he was considering, and that he was going to recompense her for her services to him in some way. After the purchase of the property in dispute here, Westover asked Mr. Kenyon about it, and gives his language as follows: "He told me that that was the final result of his determination as to Mrs. Sutton; that he had bought the place for her; that she wanted it, and that he had made up his mind that it was the very best that could be done, *and he had promised her that* he would put a house on the place, such as she wanted, *and the place should be hers.* He said that it was not perhaps as much as Mrs. Sutton was really entitled to; but he thought that after all it would be better for her than if she should be provided for in some other way that would be even larger. He said that he had made her home his home, as I knew, and it was understood that he was to continue thereafter making his home with Sortie, that is, Mrs. Sutton."

Mr. Kenyon then went on to say, as the witness states, that by having a fine building on the place she would be able, if anything should happen to him, to take care of herself by keeping boarders; and continued:

"The house will be such as Mrs. Sutton wants. I have agreed that Sortie shall have the house just exactly as she wants it; just to suit her. He said he was to continue to make his home with Mr. and Mrs. Sutton, and that in view of the past and her services to him, and what had been done, and in view of the position which she was occupying as to him, and the services she had performed and was still to perform, *he had promised her that place,* and he had bought it for her because it pleased her, and he had promised to build such a house thereon as she should want."

If this statement be true, here is at once the [245] promise and the consideration for it, amounting to an agreement stated in Mr. Kenyon's own language, with all the clearness of detail necessary to a contract. There was no question about the property to be conveyed, the promise to build the house, the parties to the agreement, or the consideration for the promise.

The witness then details a conversation which he had in 1881, in which Mr. Kenyon reminded

him of what he had said to him before on the same subject, and said that after much thought he had concluded that was the best arrangement, and she had agreed to it; that it was arranged between them that he should continue to live with her in the future; that he was under obligations to her for what she had done for him individually, and that he had made arrangements with her and she would continue to do for him as she had done, *and he had promised to buy that place for her and fix it up and deed it to her.* The witness then testified as to the board paid by Mr. Kenyon, and said: "I understood from him, as he said, that the services of Mrs. Sutton which she had rendered him, and which he was under obligations to requite, together with those of the same kind which she had agreed to perform in the future, were the basis *of his promise to convey her the premises in dispute*, and were outside of anything which he had furnised in cash expense of living."

Julia L. White, who was well acquainted with Mr. Kenyon, details various conversations with him, in one of which he said that he wanted to give the property which is now in controversy to Mrs. Sutton, for she had taken care of him and had promised and was to continue to take care of him as long as he lived, and that *he then said he had promised to give* it to her. She testifies that Mr. Kenyon stated to her that he desired to purchase this property for Mrs. Sutton on account of the services and care she had already given to him, *and had promised to give him;* and that he said on Wednesday before his death that he had bought the place, that it was for Mrs. Sutton, to make her home there for the care she had given him, and for the care she promised to take of him until his death.

[246] Mr. Small, who lives adjoining the property in dispute, details a long conversation he had with Mr. Kenyon in regard to the building of the house, and states that he said: "I am not building it for myself; I am building it for Mrs. Sutton." Mr. Kenyon then went on to say that he did not want to be bothered with the building of it; he had left it all to Mr. and Mrs. Sutton; he had nothing to do with the building except to furnish the money; that the rooms had all been arranged by her, and that he intended she should have it as she wanted it. He states that he asked Mr. Kenyon, in whom the title was, whether it was in Mrs. Sutton at that time, and he replied: "No, when the property was bought I took the deed, but I intend to have the property all fixed in Mrs. Sutton." "I said, 'Haven't you done anything about it yet?' He said, 'No.' Said I, 'You may have it in your mind to do something you want to do, but if you do not do it, if you should be taken away, it won't be done. Under our law, unless there is a writing made, or the parties put in possession under the agreement, it won't amount to anything.' He said, 'I can't make out anything here for the reason my papers are in New York. I desire to make some alterations in my affairs. Then I shall fix it up, but I shall put them in possession. I have put them in possession. Mrs. Sutton has had possession ever since I went to New York in the summer. I turned it over to them then, and they are now in possession. Mr. Sutton has the keys to the little house and all the property, and I intend they shall be in possession, and are in possession just as perfect as I can make it. If I had my papers here I should have them altered now. I have my attorney down there. I don't want to do anything until I get down there.' He said, 'I propose to give it to them. Mrs. Sutton has been very kind to me in sickness and disease in my family; took care of my wife until she died. I have a good home myself with them. I propose now to repay them in this way.'" The witness also testifies as to other conversations, in which Mr. Kenyon declared that the keys and the possession were in the Suttons; that the property was theirs to all intents and purposes; that the title was taken in his name when he bought the property, but that he intended Mrs. Sutton should have it, and that he frequently spoke of them as "the children." [247]

Mrs. Williams, an insurance agent, while examining the house at the request of Mrs. Sutton, with reference to a policy, met Mr. Kenyon on the premises. He showed her over the house and directed her attention to certain alterations that the Suttons had made in the plan, and said: "It is as they want it; it is the children's; it don't make any difference to me how they fix it." And again she states that he said in regard to the gables that he would have made every one different, but the children (a phrase which he often used with reference to Mr. and Mrs. Sutton) wanted it so, and it did not make any difference to him; "*it was theirs.*"

To William K. Washburn, who was working about the grounds, Mr. Kenyon said that he was fixing it up for Mr. and Mrs. Sutton; that it was their place, and they were in possession.

In regard to some of the details, Mr. Eastman, another witness, testified that Mr. Kenyon said he had nothing to do with the building of it; that Mr. Sutton was building it for himself.

Mr. Anderson, a resident of Oconomowoc, testifies that he asked Mr. Kenyon, in a conversation that they had about the place now in dispute, if he felt anything like a granger; and that his reply was that he could not say he did, as he did not buy the place for himself, but had bought it for Mrs. Sutton, who undoubtedly would be a permanent resident, although he should make it his home with them while there, as he had for several years made their place his home. In another conversation, Mr. Kenyon said to him that the building was much larger than they intended in the start, but he was building it entirely for Mrs. Sutton, and it had been enlarged at her suggestion; that Mr. Sutton had the entire control, and he had authorized him to build and finish it and make the improvements exactly as Mrs. Sutton wished. On his cross examination he testified that Mr. Kenyon said he had bought it, but not for himself; that he had bought it for Mrs. Sutton, and they would make it a permanent residence, and he should make it his home with them whenever he was there.

Celestia Edwards testifies to a conversation with Mr. Kenyon about the property, in which she remarked that they would have a very beautiful place and home there, to which he replied that he liked it very well, but it did not [248]

make any difference to him; "it was all theirs, it was the children's; they were fixing it up just to suit themselves."

Clarence I. Peck also testifies to a conversation about this place, in which Mr. Kenyon said that he intended to finish it up in good style for "the children," as he called them; meaning Mr. and Mrs. Sutton; and also that he said on another occasion: "The place belongs to Charlie and Sortie, anyhow, and I thought I would give the job of superintending it to Charlie."

Some comment is made that the most direct testimony on the subject of a promise comes from the sister and brother-in-law of the plaintiff, but there is nothing to discredit their evidence; no impeachment of their character is attempted, nor is it shown that they are in any way dependent upon her. No reason is given why they should state anything false, and their testimony is wholly uncontradicted. It is also consistent with all the circumstances of the case.

It is further made a subject of comment that Mrs. Sutton did not make claim to the title to this property, nor bring this suit, for two or three years after the death of Mr. Kenyon; but it is easy to suppose that she really believed that for want of a written promise or agreement she could not enforce her right to the property. While this principle of the necessity for a written agreement in regard to the title to real property is almost universally understood among all classes of people, however unlearned in the law, it is not very well known that there is an exception to it in the case of a promise, not in writing, but so far performed as to take it out of the Statute of Frauds.

On the whole, we think that the evidence justifies the inference that Mr. Kenyon, having a clear intention that this property should belong to Mrs. Sutton, bought it for her, and also promised her that he would make over the title to her upon consideration that she should take care of him during the remainder of his life as she had done in the past.

The decree of the Circuit Court is therefore affirmed.

---

[252] ALFRED CARR, Superintendent of the Insurance Department of the STATE OF MISSOURI, *Appt.*,

v.

JOHN C. HAMILTON, Executor of WILLIAM E. HAMILTON.

(See S. C. Reporter's ed. 252-262.)

Set-off of policy against debt due insurance company—bankruptcy of company—rights of policy holders—endowment policy.

1. Where a holder of a life policy borrows money of his insurer and gives a mortgage therefor, it will be presumed, *prima facie*, that he does so on the faith of the insurance, and in expectation of possibly meeting his own obligation to the company by that of the company to him; and the case is one of mutual credit and the insured is entitled to the privilege of compensation or set-off whenever the mutual liquidation of the demand is judicially decreed on the insolvency of the company, although the insurance was not due at the time of the insolvency.

2. Where an insurance company becomes bankrupt and goes into liquidation, the policy holders become creditors to an amount equal to the equitable value of their respective policies, and entitled to participate *pro rata* in its assets.

3. It is no objection against allowance of the set-off or compensation, that when the insurance company became insolvent the insurance had not become absolute, as its value was capable of ascertainment.

4. Nor is it any objection to such set-off that the policy, being an endowment policy, was payable at a certain time, to the assured or his assigns, or if he should die previously to that time was payable to his children, naming them.

[No. 105.]

Argued Dec. 4, 1888. Decided Jan. 28, 1889.

APPEAL from a decree of the Circuit Court of the United States for the Western District of Louisiana, dismissing a suit for the foreclosure of a mortgage, and granting a perpetual injunction against the sale of defendant's property thereunder. *Affirmed.*

The facts are stated in the opinion.

Mr. **Alfred Goldthwaite**, for appellant:

This is not a case of mutual credits between the insurance company and the defendant.

Newcomb v. *Almy*, 96 N. Y. 308.

The debtor who owes a debt to several creditors jointly cannot discharge it by setting up a claim which he has against one of those creditors.

Gray v. *Rollo*, 85 U. S. 18 Wall. 634 (21: 929); *Watson* v. *Mid Wales R. Co.* L. R. 2 C. P. 593.

The plain and practicable plan of settling the affairs of an insolvent company of mutual insurers is to liquidate its means and its responsibilities separately.

Hiller v. *Allegheny Co. Mut. Ins. Co.* 3 Pa. 474.

The debt was not equally liquidated and demandable with the debt of Hamilton to the association when the compensation was pleaded.

Phelps v. *Stone*, 3 La. Ann. 617; *Fagot* v. *Porche*, 7 La. 562; *Hoffman* v. *Pontchartrain R. Co.* 9 La. 20; *Lacoste* v. *Bordere*, 7 Mart. N. S. 516; *Owen* v. *Vanderslice*, 9 La. Ann. 189; *Relfe* v. *Rundle*, 103 U. S. 222 (26: 337).

Messrs. R. J. Looney, T. Alexander and **N. C. Blanchard** for appellee.

Mr. Justice **Bradley** delivered the opinion of the court: [253]

This case arises out of a policy of life insurance, dated July 14, 1869, granted by The Life Association of America, a corporation of the State of Missouri, to William E. Hamilton, the appellee, of Shreveport, Louisiana, upon the life of said Hamilton; and also out of a mortgage given by said Hamilton to the said association, for a loan of money; and the main question is whether the amount due on the policy ought to be set off by way of compensation or reconvention against the amount due on the mortgage.

The policy was not an ordinary one, payable only at the termination of the life insured, but was what is sometimes called an endowment policy, payable at a certain time at all events, or sooner, if the party should die sooner; and the premiums were all to be paid within a certain limited time, to wit: ten years. By the terms of the policy, in consideration of $877.80, paid by Hamilton, trustee, and of the annual pay-

ment of a like amount on the 14th of July, every year, for nine years thereafter, the association assured his life in the amount of $10,000, payable to him or his assigns, on the 14th of July, 1884; or, if he should die previously, payable to his children, naming them.

By the rules of the association, the insured was only required to pay two thirds of the annual premium in cash; and had the option of a credit or loan for the other third, paying the interest thereon at 8 per cent per annum. Hamilton availed himself of this privilege of credit, and made all the cash payments required for the whole ten years. His premium loan amounted in 1879, when the association failed, to $2,372.90, and the equitable value of his [254] policy, at that time, was $7,779.95; leaving in his favor the sum of $5,407.05. This is the amount which he contends should be allowed to him by way of compensation or reconvention against his mortgage debt due to the association.

The mortgage debt referred to arose as follows: in March, 1870, Hamilton borrowed of the association the sum of $3,850,—being, as he contends, entitled to such loan as a policy holder, and which he would not have made but for his being such policy holder. To secure the payment of this loan he gave his promissory note for $3,850, dated 11th of March, 1870, and payable twelve months after date with 8 per cent interest after maturity; and to secure the note he gave a mortgage of same date on certain lots and buildings in Shreveport, Louisiana. The mortgage contained the usual *pact de non alienando*, and was recorded March 11, 1870, and reinscribed May 28, 1881.

By an amended charter of the association, approved October 2, 1869, it was authorized by its directors to form separate departments and branches in the different States, with separate organizations of directors and officers, but having a general connection with the parent company; and it was provided that each department should have the management and investment of the funds received therein. Under this charter a separate department was made of Louisiana and Texas; and Shreveport was one of the districts of this department. The loan made by Hamilton, who resided in Shreveport, was made, as he testifies, from the funds raised from the business of the association in that district.

The Insurance Association became insolvent in 1879, and on the 13th of October, in that year, proceedings were instituted against it by the Superintendent of the Insurance Department of Missouri, under the laws of that State, for the liquidation of its affairs; and such proceedings were had that on the 10th day of November, 1879, a decree was made by the Circuit Court of the City of St. Louis (having jurisdiction of the matter), declaring that the association was insolvent and that its condition was such as to render its further proceedings hazardous to the public and to its policy hold- [255] ers, and that the association be dissolved, and its officers and agents enjoined from exercising any control over its property or affairs, and from the further continuance of its business of life insurance. The decree further proceeded to vest the title to all the property and assets of the association in the Superintendent of the Insurance Department of the State, to hold and dispose of the same for the use and benefit of the creditors and policy holders of the institution; and its officers were directed to convey, assign and transfer all its property and assets to the said superintendent. In short, the association was put into a condition of absolute bankruptcy and liquidation.

In June, 1883, the Insurance Superintendent of Missouri for the time being, finding Hamilton's note and mortgage amongst the assets of the Life Association, filed a petition for executory process in the Circuit Court of the United States for the Western District of Louisiana for the seizure and sale of the property covered by the defendant's mortgage before referred to; and afterwards filed a bill of foreclosure against Hamilton, the appellee. The latter, besides an answer, filed a cross bill, setting up the amount due on the policy of insurance by way of compensation and reconvention. It is conceded that the interest was paid on the mortgage debt up to March, 1879; and there is no question that the equitable value of the policy in November, 1879, was, as before stated $5,407.05, after deducting all deferred premiums. This was more than enough, by over $1,800, to pay and satisfy the mortgage. The question is whether the appellee is entitled to such compensation or reconvention.

Natural justice and equity would seem to dictate that the demands of parties mutually indebted should be set off against each other, and that the balance only should be considered as due. But the common law, for simplicity of procedure, determined otherwise, and held that each claim must be prosecuted separately. "The natural sense of mankind," says *Lord* Mansfield, "was first shocked at this in the case of bankrupts; and it was provided for by 4 Anne, c. 17, § 11, and 5 Geo. II. c. 30, § 28." *Green* v. *Farmer*, 4 Burr, 2220, cited in 2 Story, Eq. Jur. § 1433. In pursuance of these [256] old statutes, and of the dictates of equity, the principle of set-off between mutual debts and credits has for nearly two centuries past been adopted in the English Bankrupt Laws, and has always prevailed in our own whenever we have had such a law in force on our statute book; and it mattered not whether the debt was due at the time of bankruptcy or not. See Babington, Set-Off, 118; *Ex parte Prescott*, 1 Atk. 231; Bac. Abr. tit. Bankrupt (K); Acts of Congress, 1800, § 42; 1841, § 5; 1867, § 20; Bump, Bankr. 10th ed. 91. It is difficult to see why this principle of justice should not apply to persons holding policies of life insurance in a company which becomes bankrupt and goes into liquidation By that act the company becomes *civiliter mortuus*, its business is brought to an absolute end, and the policy holders become creditors to an amount equal to the equitable value of their respective policies, and entitled to participate *pro rata* in its assets. If any one is indebted to the company, especially if his debt was contracted with reference to, and because of, his holding a policy, there would seem to be strong reason for allowing him a set-off, and no good reason to the contrary.

One objection raised against the allowance of set-off, or compensation, in the present case, is that when the life association became insolvent, and when the present suit was com-

menced, the insurance had not become absolute in Hamilton, and did not become so until July 14, 1884,—previous to which time his children had a contingent interest therein, they being the beneficiaries in case he should die before that date. But this reason cannot be sound; for a settlement of the company's affairs cannot be postponed to await the determination of every contingency on which its policy engagements are suspended. This would postpone a settlement for at least half a century. Every person's interest in life insurance is capable of instant and present valuation, almost as certain and determinate as the discount of a note or bill payable in the future. Tables of mortality and of all values dependent thereon are adopted by every company, and furnish an assured basis of computation for this purpose. [257] The table used by the Life Association of America is set out in the record, and other tables based upon it are used to facilitate the calculations desired.

Another reason urged against allowing a set-off in this case is that the defendant, Hamilton, holds the policy as trustee, and cannot set off his claim as trustee against a debt due in his own right.

This argument has no better foundation than the other. Hamilton was only trustee so far as his children were interested; he could not be trustee for himself; and his interest was separate from theirs. The value of each was easy of calculation by any competent actuary. The policy had less than five years to run, and the interest of his children was contingent upon his dying within that time, he being then fifty-one years of age. Calculated according to the American table of mortality annexed to the charter of the association and contained in the record, at 5 per cent compound interest (the usual rate assumed), the value of the children's interest was less than 7 per cent of the total insurance, or less than $700; whilst the value of Hamilton's interest was more than 70 per cent of the insurance, or more than $7,000.* Or, first deducting from the whole present value of the policy (which at 5 per cent per annum for five years deferred is $7,836.26) the amount due for deferred premiums ($2,372.90), the value of the children's interest was less than $500, and that of Hamilton's nearly $5,000—a [258] sum sufficient to cancel all his indebtedness to the company and leave a considerable balance over.

The proceedings which took place in the Circuit Court of St. Louis in the course of liquidating the affairs of the association may be referred to in this connection. In the progress of the case an actuary was appointed by the court to value all the policies of the company then in force. Hamilton presented a petition to the court, claiming that the net value which his policy had on November 10, 1879 (the day the association was declared bankrupt and dissolved) should be an offset to his note of $3,850, and the interest thereon. The actuary made a report exhibiting the particulars relating to the policy, and concluded as follows: "The value of the policy on November 10, 1879, the date of the dissolution of the company by order of the court, was, of the whole $10,000, $7,779.95; from which deducting outstanding note of $2,372.90 left $5,407.05, as the net value, and which amount was allowed by the commissioner and approved by the circuit court."

It does not appear whether the Circuit Court [259] of St. Louis allowed the set-off or not. But the Circuit Court of the United States dismissed the original bill in the present case, and granted a perpetual injunction against the sale of the defendant's property under his mortgage, but disallowed his demand of reconvention. The form of the decree was as follows: After stating the titles of the bill and cross bill, the decree was in the words following, to wit:

"In the above cases, after trial and due consideration by the court, it is ordered and adjudged by the court that John F. Williams, superintendent, take nothing on his bill of complaint, and said bill is hereby dismissed.

"And it is further adjudged and ordered that the bill of complaint of W. E. Hamilton be sustained and the injunction of said Hamilton be, and is hereby, made perpetual.

"And it is further ordered that the demands in reconvention of the said Hamilton in his bill of complaint be, and is hereby rejected, without prejudice and of nonsuit." Also, decree for costs.

We think that this decree attained the substantial justice of the case. If not absolutely correct it erred against the defendant, who has not appealed. The counsel for the appellant, however, strenuously contends that compensation could not properly be allowed in this case. In support of his views he refers to the case of *Newcomb* v. *Almy*, 96 N. Y. 308, decided by

*The process is a simple one, as shown by the elementary books on the subject. The policy at the time the association failed (Nov. 1879) had nearly five years to run; suppose it five. Present value of $10,000, five years deferred, at 5 p. c. compound interest is $7,835.26. This sum, less the value of his children's expectancy, was the value of Hamilton's interest. He was then fifty-one years old. The mortality table shows that out of 68,842 persons living at that age, 1,001 die the first year; 1,044, the second year; 1,091, the third; 1,143, the fourth; and 1,199 the fifth; showing that the chances of the children's receiving the insurance the first year were only 1,001 in 68,842, or $\frac{1001}{68842}$; the second year, 1,044, etc.; and the present value of the expectancy for each year would be the sum expected divided by 1.05, 1.05^2, 1.05^3, etc. The present value of the children's expectancy for each year, therefore, was as follows, to wit:

1st year,	$\frac{1001}{68842} \times \frac{10000}{105} =$ . . .	$138.48
2nd year,	$\frac{1044}{68842} \times \frac{10000}{105^2} =$ . . .	137.53
3rd year,	$\frac{1091}{68842} \times \frac{10000}{105^3} =$ . . .	136.90
4th year,	$\frac{1143}{68842} \times \frac{10000}{105^4} =$ . . .	136.60
5th year,	$\frac{1199}{68842} \times \frac{10000}{105^5} =$ . . .	136.46
Total for the 5 years, =	. . . . .	$685.97
This deducted from	. . . . .	7,835.26
Leaves value of Hamilton's interest,		$7,149.29
Or,		
If the entire present value,	. .	$7,835.26
Is reduced by the amount of deferred premiums,	. . . . .	2,372.90
The net equitable value is,	. . .	$5,462.36
If this be divided in the same proportion as before, the value of the children's interest was,	. .	478.22
And that of Hamilton's,	. . . .	4,984.14

In November, 1879, his interest would be a little more, and that of the children's a little less, than in July. By the subsidiary tables in use by all life insurance companies the above calculation would be greatly shortened and simplified.

the Court of Appeals of New York. That case was almost parallel with the present one and the claim of set-off was disallowed. The suit was brought by the receiver of an insolvent life insurance company against the holder of an endowment policy issued by the company to recover the amount of a promissory note. The defendant, as in this case, sought to set off the value of his policy against the note. The policy was not yet due, and in case the defendant died before it became due, the amount was payable to his wife. The court assumed that the interests of the assured and his wife were so involved together that they could not be separated; and that it did not yet appear who would be entitled to the insurance,—not adverting to the fact that the interests of all the [260] parties became fixed by the insolvency of the company, and must be computed as expectancies reduced to present values. It is true, the court does, in the next sentence, concede that the policy had a reserve value,—but asks, "To whom was that value payable?" The plain answer was at hand, that the reserve value of each person's interest was payable to him or her. We cannot but think that if the true character of the interests in question had been brought to the attention of that learned court, it would have come to a different conclusion from that which was reached.

The counsel for the appellant further contends that, by the Law of Louisiana (which must undoubtedly govern the case), compensation is not allowed against an insolvency in favor of a party whose credit was not due when the insolvency occurred. The Civil Code of Louisiana on the subject of set-off is identical with the Code Napoleon. The article apropos of the point now under consideration is the 1291st of the Code Napoleon, and the 2209th of the Civil Code of Louisiana, and reads as follows: "Compensation takes place only between two debts, having equally for their object a sum of money, or a certain quantity of consumable things of one and the same kind, and which are *equally liquidated and demandable* [exigibles, *i. e.* due]". Now, although upon a bankruptcy declared, all claims against the bankrupt become instantly due (subject, of course, if not matured, to a rebate of interest), and are equally entitled to dividends of the bankrupt assets, yet, in order that a claim may be the cause of compensation, the commentators hold that it must be due [exigible] at the time when the bankruptcy is declared. Touillier, Vol. 7, art. 381; Demolombe, Vol. 28, art. 540. There have also been judicial decisions to the same effect, though not uniformly so. See Merlin, Rep. Vol. 8, p. 262, tit. *Compensation.*

But if there are technical reasons in the Law of Louisiana for rejecting the defense when set up by way of compensation, it was nevertheless allowed by the supreme court of that State, by way of reconvention, in a case exactly like the present. *Life Asso. of America* v. *Levy*, 33 La. Ann. 1203. Levy was the holder of an [261] endowment policy in the same company as Hamilton, and in the same district (Shreveport). As in this case, the policy had not matured. But the court held that it might be set up by way of reconvention, and that the amount to which the defendant was entitled could be recovered by him and deducted from the amount of his indebtedness to the company. This decision was based on a Statute of Louisiana, enacted in 1839, as an amendment to article 375 of the Code of Practice. Article 375 was originally in the following form, to wit: "In order to entitle the defendant to institute a demand in reconvention, it is requisite that such demand, though different from the main action, be, nevertheless, necessarily connected with, and incidental to, the same; as, for instance, the demand instituted by the possessor in good faith against him who sues in order to evict him, or for the purpose of obtaining the payment of the improvements made on the premises." The amendment adopted in the Act of 1839, and now forming part of the article, provides, "that when the plaintiff resides out of the State, or in the State, but in a different parish from the defendant, said defendant may institute a demand in reconvention against him for any cause, although such demand be not necessarily connected with, or incidental to, the main cause of action." The court in *Life Asso.* v. *Levy* says: "The right of the defendant to set up and urge his demand in reconvention against the plaintiff, a resident of the State of Missouri, is, under our law, and the jurisdiction of our State, too plain to require argument;" and reference is made to *Spinney* v. *Hyde*, 16 La. Ann. 250; *Spears* v. *Spears*, 27 La. Ann. 642. The court adds: "The objections urged by plaintiff to the allowance of the reconventional demand, on the ground that it would be a compensation of plaintiff's demand, and that this cannot take place, because plaintiff is insolvent and defendant cannot compensate his own debt, but is entitled only to such dividend as may be declared after a final settlement, and because the policy holders of the association are partners and can only sue for a settlement of the partnership affairs, are fully met, discussed and overruled by the lower judge, and we think, properly." The court, in its judgment, allowed [262] the cash value of the policy, as reported by the actuary, with interest thereon from the time of the adjudication in bankruptcy, November 10, 1879. In our opinion this was a just judgment, and the present case, being precisely like, is governed by it.

It is true, the court below disallowed the claim in reconvention; but it decreed a perpetual injunction against the enforcement of the defendant's mortgage, and thereby did substantial justice. The result which the court reached was correct, though it may have been led thereto on an insufficient ground. We are free to say, however, that if the court below went on the ground that the defendant was entitled to the benefit of compensation, we should be disposed to concur with it, notwithstanding the doctrine laid down by the commentators. We are inclined to the view that where a holder of a life policy borrows money of his insurer, it will be presumed, *prima facie*, that he does so on the faith of the insurance and in expectation of possibly meeting his own obligation to the company by that of the company to him, and that the case is one of mutual credit, and entitled to the privilege of compensation or set-off whenever the mutual liquidation of the demands is judicially decreed on the insolvency

of the company. The case of *Scammon* v. *Kimball*, 92 U. S. 362 [23:483], is in concurrence with this view. It was there held that a banker, having insurance in a company which was rendered utterly insolvent by the great Chicago fire of 1871, by which the banker's insured property was consumed with the rest, had a right to set up the amount of his insurance against money of the company in his hands on deposit. The insurance was not a debt due at the time of the insolvency; it became due afterwards, when the banker had performed all the conditions required in such cases.

As the defendant took no appeal, the case is so clearly decided rightly, as regards any complaint to be made by the plaintiff against the decree, that we have no difficulty in affirming it.

Decree affirmed.

---

[305] THE UNION PACIFIC RAILWAY COMPANY, *Appt.*,
v.
MARIA W. MCALPINE ET AL.

(See S. C. Reporter's ed. 305-315.)

Verbal contract for exchange of lands—part performance, what constitutes—obligation—estoppel—consolidation of railway companies, effect of—trust, binding on grantee—defenses.

1. Where a railway company orally agreed upon the exchange of lands with an individual, although the contract, for want of the signature of the corporation or its agents, was void under the Statute of Frauds, yet, possession taken of the several parcels in pursuance of the contract and continued ever since, and expenditures for buildings and other improvements upon the respective parcels, constitute a part performance sufficient to take the contract out of the operation of the statute and authorize a decree for its full performance.

2. The fact that possession was taken before the ratification of the contract by resolution of the board of directors of the company, did not impair the effect of that possession as an act of part performance.

3. The obligation of the contract was not impaired by the fact that when the superintendent of the company notified the other party that the company would not complete the exchange, the other party wrote to the superintendent asking him when the company would be ready to remove its track from the lands and come to a settlement for its use.

4. One will not be permitted to lead another to act upon a contract of purchase with him and incur expenses by reason of it, and then, upon some pretext of a defect in a matter of form, refuse compliance with its provisions, and thus deprive the purchaser of the benefit of his labor and expenditures. Courts of equity, in such cases, compel the vendor to keep his engagements.

5. Where the railway company subsequently consolidated with another company, under a new name, and transferred its property to the new company subject to all charges, liens and equities to which it was before subject, such new company is under obligation to complete the contract and to make a conveyance.

6. Whenever property charged with a trust, is conveyed to a third party, with notice, he will hold it subject to that trust, which he may be compelled to perform equally with the former owner.

7. The railway company cannot set up a mortgage, executed by it upon the land agreed to be exchanged, as a release from its obligation to make a conveyance in execution of the contract.

8. In a suit for specific performance of a contract for the exchange of land, the defendant cannot repudiate the contract on the ground that the plaintiff is willing to accept the deed for less land than was originally agreed upon.

[No. 128.]

Argued Dec. 14, 17, 1888. Decided Jan. 28, 1889.

APPEAL from a decree of the Circuit Court of the United States for the District of Kansas, in favor of complainants in a suit for the specific performance of a contract for the exchange of land. *Affirmed.*

Reported below, 28 Fed. Rep. 168.

The facts are stated in the opinion.

Messrs. **J. M. Wilson**, *John F. Dillon*, *A. L. Williams* and *J. P. Usher* for appellant.

Messrs. John W. Day, **Wm. M. Springer** and **James M. Mason**, for appellees:

Where a person contracts to sell land, and subsequently conveys the same to a third party, who has notice of the prior contract of sale, such third party stands in the place of his vendor, and equity will decree a specific performance against such subsequent purchaser.

A species of assignment results where a railroad or other public company, after entering into a contract, becomes consolidated with another company; liability under the then existing company being transferred to the new company thus formed.

Waterman, Spec. Perf. §§ 64, 75, 77, 512; also Pom. Spec. Perf. § 465 and notes and decisions there cited; *Gregg* v. *Hamilton*, 12 Kan. 333.

A railroad company contracting obligations and then consolidating with another may be sued thereon by the new name thus assumed, and will be estopped from denying it.

Columbus etc. R. Co. v. *Skidmore*, 69 Ill. 566; *Ridgway Twp.* v. *Griswold*, 1 McCrary, 151.

Purchasers of distinct parcels of land cannot be made codefendants.

Waterman, Spec. Perf. § 60.

Time is not of the essence of the contract.

Taylor v. *Longworth*, 39 U. S. 14 Pet. 172 (10:405); *Hepburn* v. *Auld*, 9 U. S. 5 Cranch, 262 (3:96); *Hepburn* v. *Dunlop*, 14 U. S. 1 Wheat. 179 (4:65): *Brashier* v. *Gratz*, 19 U. S. 6 Wheat. 528 (5:322); *Bank of Columbia*, v. *Hagner*, 26 U. S. 1 Pet. 455 (7:219); *Rader* v. *Neal*, 13 W. Va. 373.

If a principal ratifies the part of a transaction that favors him, he ratifies the whole.

Gaines v. *Miller*, 111 U. S. 395 (28:466).

Silence is ratification.

Field v. *Farrington*, 77 U. S. 10 Wall. 141 (19:923); *Southern L. Ins. Co.* v. *McCain*, 96 U. S. 84 (24:653).

This applies to corporations as well as to individuals.

Marshall Co. v. *Schenck*, 72 U. S. 5 Wall. 772 (18:556).

An individual, under similar circumstances, must rescind or affirm *in toto*.

Peninsular Bank v. *Hanmer*, 14 Mich. 208; *Davenport Sav. F. & L. Asso.* v. *North Am. F. Ins. Co.* 16 Iowa, 74; *Phila. W. & B. R. Co*, v. *Quigley*, 62 U. S. 21 How. 202 (16:73); *Merchants Nat. Bank* v. *State Nat. Bank*, 77 U. S 10 Wall. 604 (19:1008); Waterman, Spec. Perf. § 306; *Durham* v. *Carbon Coal & Min. Co.* 22 Kan. 232.

The letters of the officers form a sufficient signing of the agreement.

Western Union Teleg. Co. v. *Chicago & P. R. Co.* 86 Ill. 246.

For years the company silently acquiesced in the arrangement made by its managing officers, and is estopped to deny it.

Mahaska Co. R. Co. v. *Des Moines Valley R. Co.* 28 Iowa, 437; *Singer Mfg. Co.* v. *Holdfodt*, 86 Ill. 456; *Erie R. Co.* v. *Del. etc. R. Co.* 21 N. J. Eq. 283; *Elysville Mfg. Co.* v. *Okisko Co.* 1 Md. Ch. 392; *Durham* v. *Carbon Coal & Min. Co.* 22 Kan. 232; *Carithers* v. *Weaver*, 7 Kan. 110; *Caldwell* v. *Carrington*, 34 U. S. 9 Pet. 86 (9:60); *Bigelow* v. *Armes*, 108 U. S. 10 (27: 631); *Howard* v. *Patent Ivory Mfg. Co.* R. & Corp. L. J. of Oct. 13, 1888, 341.

When the officers of a corporation are cognizant of a contract made in the company's behalf, by one employed for the company, and allow it to be acted upon without any objection, this is evidence of ratification by the company.

Lee v. *Pittsburgh Coal & Min. Co.* 56 How. Pr. 373.

The company ratifies by appropriating the benefits of the contract.

Alexander v. *Brown*, 9 Hun, 641; *Hoyt* v. *Thompson*, 19 N. Y. 207.

Failure to repudiate is ratification.

Walworth Co. Bank v. *Farmers Loan & Trust Co.* 16 Wis. 629; *Shaver* v. *Bear River & A. Water & Min. Co.* 10 Cal. 396.

No express vote necessary.

Howe v. *Keeler*, 27 Conn. 538; *Ridgway* v. *Farmers Bank*, 12 Serg. & R. 256; *Ala. & T. R. R. Co.* v. *Kidd*, 29 Ala. 221.

Although there is no resolution to that effect.

Bank of U. S. v. *Dandridge*, 25 U. S. 12 Wheat. 64 (6:552); *Eureka C. W. Machine Co.* v. *Bailey W. & W. Machine Co.* 78 U. S. 11 Wall. 488 (20:209); *Gottfried* v. *Miller*, 104 U. S. 521 (26:851); *Bank of Columbia* v. *Patterson*, 11 U. S. 7 Cranch, 299 (3:351); *Mahoney Min. Co.* v. *Anglo Cal. Bank*, 104 U. S. 192 (26:707).

Authority may be implied from the manner in which the officer has been permitted to transact business.

Fifth Ward Sav. Bank v. *First Nat. Bank*, 48 N. J. L. 513, 1 Cent. Rep. 438; *Morrel* v. *L. I. R. Co.* 1 N. Y. S. 65.

A long course of dealing in which one had been put forward as agent of the company proves that he is the agent of the company.

Union Gold Min. Co. v. *Rocky Mountain Nat. Bank*, 2 Colo. 248; *Elysville Mfg. Co.* v. *Okisko Co.* 1 Md. Ch. 392; *Southgate* v. *Atlantic & P. R. Co.* 61 Mo. 89; *Perkins* v. *Washington Ins. Co.* 4 Cow. 645; *Badger* v. *Bank of Cumberland*, 26 Maine, 428; *Smiley* v. *Chattanooga*, 6 Heisk. (Tenn.) 604; *Fister* v. *LaRue*, 15 Barb. 323; *Peterson* v. *New York*, 17 N. Y. 449; *Phillips* v. *Campbell*, 43 N. Y. 271.

Mr. Justice **Field** delivered the opinion of the court:

This case comes from the Circuit Court of the United States for the District of Kansas. [307] It is a suit for the specific performance of a contract for the exchange of lands in the State of Kansas between Maria W. McAlpine, one of the complainants below and appellees here, and the Kansas Pacific Railway Company, alleged to have been made in 1878, her contention being that the defendant, the Union Pacific Railway Company, has succeeded not only to the property but to the obligations of that company. The decree of the circuit court was in favor of the complainants, and the case is brought here on the appeal of the defendants. *McAlpine* v. *Union Pac. R. Co.* 23 Fed. Rep. 168.

Nearly every fact essential to the maintenance of the suit is controverted, and in relation to many of the facts there is a perplexing conflict of evidence. It would serve no useful purpose to detail and discuss the mass of testimony contained in the record and show, out of the varying statements of witnesses, the attendant circumstances and the accompanying documents, where the preponderance of evidence rests with respect to any essential matter. We shall briefly state the facts which seem to us to be sufficiently established. It appears that the Town of Wyandotte, in Kansas, is situated at the junction of the Kansas and Missouri Rivers, and that on the 16th of September, 1861, the title to a small tract of land bordering on the north side of the Kansas River, within the town, being four acres in extent, and known as the "Ferry Tract," was vested in one Isaiah Walker under a patent of the United States. This tract afforded an available and convenient landing from the steamboats. On the 21st of October, 1874, the title to it passed to Maria W. McAlpine by conveyance of the Sheriff of Wyandotte County, under a decree of the District Court of the Tenth Judicial District of Kansas, rendered in a partition suit between her and parties claiming interest therein. The other complainant and appellee, Nicholas McAlpine, is the husband of Maria. In the early part of 1878 negotiations were had between the McAlpines and officers of the Kansas Pacific Railway Company, for the exchange of two acres and seventy one-hundredths of an acre of this Ferry tract for a parcel of land consisting of twenty-five acres and a quarter, lying north of Wyandotte, then owned by that com- [308] pany. The two acres and seventy one-hundredths of an acre were valued by the McAlpines at $2,000. The 25¼-acre tract held by the railway company was valued at $1,500. For the difference in value the McAlpines offered to take a quarter section of land in Pottawatomie County, Kansas, which was estimated to be worth $3 an acre. The negotiations were had with the company through its president, its general superintendent, and its attorney at law. It does not appear that any of these officers, except its president, Robert E. Carr, acted upon any previous authority conferred by the Board of Directors. All its members, however, were aware of the negotiations, and no one expressed any doubt that what was done in the matter would be finally approved by the Board. Mr. Carr testified that whatever he did in regard to the exchange as an officer of the railway company was done after consultation and advice with the Board of Directors; and that in this case he also consulted with the receiver. The railway company was then and for some period subsequently, in the hands of a receiver appointed in a foreclosure suit apparently of a friendly character, resulting in a decree extending the time for paying the amount due. The rights of the receiver were merely temporary, the title of the

property remaining in the railway company, and on the termination of the receivership possession was restored to the company. Mr. Carr, after becoming acquainted with the terms of the proposed exchange, and acting upon the advice of the board, on the 26th of February, 1878, sent to the general superintendent of the company the following communication:

"KANSAS PACIFIC RAILWAY,
"OFFICE OF GENERAL MANAGER FOR THE RECEIVERS,
"ST. LOUIS, Feb. 26, 1878.
"T. F. OAKES, Gen. Supt.

"DEAR SIR: Respecting the settlement for right of way with McAlpine, I beg to say you can settle with him on the basis of exchanging the lot of land belonging to company above Wyandotte, about twenty-five acres, for his [309] Walker-Ferry tract. That we will also, in addition, give him 160 acres of land, to be selected by him out of the lands of the company, the appraised price of which does not exceed $500; back taxes and claims on all to be satisfactorily cleared up.

"Respectfully,
ROBERT E. CARR."

This communication was turned over by the general superintendent to the attorney of the company, with an indorsement over his initials, "Go ahead with this."

The McAlpines, considering the proposition for an exchange of lands as accepted, and the terms of the contract as settled, on the 25th of March following executed to the Kansas Pacific Railway Company a deed in due form of the two acres and seventy one-hundreths of an acre. In this deed Isaiah Walker and wife united, and it was then transmitted to the officers of the railway company for delivery. Soon afterwards, the McAlpines went into possession of the 25¼-acre tract, and have remained in its possession ever since. They put valuable improvements upon the land, and there are now many buildings upon it. The railway company had been permitted, by the McAlpines and their predecessors, to lay a railroad across the Ferry tract for temporary use in transporting railroad material from steamboats to its main line. After the acceptance of the terms of the proposed exchange, the railway company took possession of the entire tract, that, is, of the two acres and seventy one-hundredths of an acre, and kept and used it until the consolidation of the company with the defendant, when its possession and use passed to the latter, which has ever since held it. But it was not until the 28th of June, 1878, that the board formally acted upon the subject. What was then done appears from the following extract from the minutes of its meeting:

"Pursuant to call of the president, the Board of Directors of the Kansas Pacific Railway Co. met at the office of the company, in St. Louis, on Friday, June 28, instant, at 2 P. M.

"Present: Messrs. Perry, Meier, Edgell, Treadway, Edgerton, and President Carr.

[310] "The president presented a form of deed to Maria W. McAlpine to 25¼ acres of land in Wyandotte County, in exchange for two and seventy hundredths acres of land at the tie landing in Wyandotte County, and asked for instructions in regard to signing the same.

"On motion of Mr. Meier, and seconded by Mr. Perry, it was resolved that the exchange of said lands be made, reserving the right of way therein, and the deed of the company be properly executed and delivered to Maria W. McAlpine whenever the land to be conveyed by her has been released from the tax claim thereon and a proper deed made for the same is delivered."

It appears that, pending the negotiations and before this action of the board, it was discovered that a small part of the Ferry tract was clouded by a tax claim of some kind, and it is to the release of that claim that reference is made in the proceedings of the board. The McAlpines were informed by the attorney of the company of its resolution. In accordance with its condition, they proceeded to take measures to remove the tax claim, and they did so, upon the advice of the attorney, by bidding in the property at the sale made for such tax, which subjected them to an expenditure of several hundred dollars. They then notified the attorney of the removal of the claim, and called upon the company to execute its deed to them of the 25¼-acre tract in accordance with the contract. This the company postponed doing from time to time under various pretenses and pretexts, apparently in the expectation of securing by delay some undue advantage over the McAlpines. In the mean time, the Kansas Pacific Company became united and consolidated with the Denver Pacific Railway and Telegraph Company and the Union Pacific Railway Company, under the name of the latter, which sets up against the claim of the McAlpines that the alleged contract for an exchange of lands was never made with the Kansas Pacific Company, or, if made, that nothing was ever done under it to take it out of the Statute of Frauds; and that even if such were the case, the contract was not enforceable against the defendant, the Union Pacific Company. We do not state the several objections urged against [31 the demand of the complainants in the language of the appellant; but we give the substance of them, or at least of such of them as we deem of sufficient importance to notice.

Some criticism is made by the appellant upon the form of the allegations respecting the contract with the Kansas Pacific Company. It is alleged that such contract was with the defendant in 1878, acting under the name and style of the Kansas Pacific Railway Company, when the defendant company was not organized until 1880. It is true, the form of the allegation is not apt or even accurate, but it does not appear to have misled the defendant in any respect; and the case was heard on its merits, as though the allegations had followed the order in which the proceedings were taken by the original company afterwards merged and consolidated into the defendant company. We do not, therefore, allow the criticism to affect our decision. It was not made in the court below where objections to the form of averments should be presented if they are to be considered here.

We agree with the Circuit Court that the record of the Board of Directors of the Kansas Pacific Railway Company of the 28th of June, 1878, measures and fixes the limits of the liabilities and obligations of that company. It shows a ratification of the past negotiations between

the McAlpines and the company for the exchange of the two acres and seventy one-hundredths of an acre of the Ferry tract for the 25¼-acre tract. It does not, it is true, make any mention of the 160 acres in Pottawatomie County, but of that land we need not concern ourselves, for as to it the bill was dismissed and no appeal was taken by the complainants. If they were willing to accept a deed of the 25¼-acre tract in exchange for the two acres and seventy one-hundredths of an acre of the Ferry tract, it did not lie with the railway company to complain that they did not make a claim for the other land. It certainly was no ground for the company to repudiate the contract as ratified, that it called for less than was originally agreed upon. That land being left out of consideration, we have the respective parcels to be exchanged sufficiently identified, and from [312] other documents they can be described by metes and bounds. That is certain, as the maxim obtains, which can be rendered certain. And if the contract, for want of the signature of the corporation or of its lawfully authorized agents, is not strictly within the Statute of Frauds, yet the possession taken of the several parcels—of the 25¼-acre tract by the McAlpines, and of the $2\frac{79}{100}$-acre tract by the railway company—in pursuance of such contract, and continued ever since, and their expenditures for buildings and other improvements upon the respective parcels, constitute a part performance sufficient to take the contract out of the operation of the statute, and authorize a decree for its full performance. The fact that possession was taken before the ratification of the board in June, 1878, did not impair the effect of that possession as an act of part performance. The taking possession of, that is, exercising control and dominion over the property, was referable entirely to the contract. It was an act done with respect to the property by the consent of the vendor, which would not have been done if there had been no contract. This consent gave to the act, which would otherwise have been tortious, its character as one of part performance.

It is not perceived how the effect of this possession, taken in behalf of Mrs. McAlpine—for it was in her interest alone that the exchange was made, the title to the Ferry tract being in her and not in her husband—is destroyed or weakened as an act of part performance by the fact that in June of the previous year, Mr. McAlpine and one Arthur had taken a lease of the 25¼-acre tract until January 1, 1878. It does not appear that Mr. McAlpine remained upon the land after the termination of the lease, which was before negotiations were opened for its acquisition, by exchanging for it the property of Mrs. McAlpine. If Arthur remained upon the premises after such termination, he surrendered and left them when informed that the contract for the exchange had been made. It is plain, in our judgment, that the subsequent possession of Mrs. McAlpine, to whom the deed of the company was to be executed, was taken under that contract, and that the improvements were made on the faith that in pursuance of it the title would be conveyed to her.

[313] Nor do we perceive that the obligation of the contract was released or impaired by the fact that when in April, 1880, the superintendent notified Mr. McAlpine that the company would not make the exchange, Mrs. McAlpine wrote to him asking when the company would be ready to remove its track from her land and come to a settlement for its use. That inquiry drew from the superintendent a request that she would "delay conclusions" until he could confer with New York parties. Her letter referred to the contract made two years before, and stated that then an exchange of lands was considered desirable by the railway people, as they had been using her land for several years, for a steamboat landing and wharf, and were still using it, without making any compensation for its use. The inquiry which followed was intended as an intimation of what would be expected if the contract were abandoned, not as a consent to such abandonment; but it is seized hold of and put forth by the defendant as an admission that no contract was ever concluded. It does not, in our judgment, justify any such inference. Nothing was ever heard from the New York parties, nor does it appear that any communication was ever made to them on the subject. And Mrs. McAlpine afterwards called upon the company to execute its deed pursuant to its contract. It was not until some time in December, 1880, that the general superintendent informed her that the contract for the exchange of the 25¼-acre tract would not be carried out under any circumstances, but that he would take the responsibility of paying her $1,500 for her land as an amicable settlement. In January, 1881, the present suit was commenced; and if, under the pretexts put forth by the company, the performance of the contract could be defeated, a great wrong would be done to the complainants. Their possession, instead of being lawful, might be treated as a continuing trespass upon the property of the railway company; and the improvements placed upon the land, and the consequent increase in its value, would be lost to them. It is the wrong and hardship which would be done to a purchaser under these circumstances, by allowing the vendor to escape from the obligations of his contract for the want of some formality in its execution, that constitute the ground of the [314] jurisdiction of courts of equity in such cases to compel performance. A principle of common justice forbids that one shall be permitted to lead another to act upon a contract of purchase with him, and incur expenses by reason of it, and then, upon some pretext of a defect in a matter of form, refuse compliance with its provisions, and thus deprive the purchaser of the benefit of his labor and expenditures. Courts of equity in such cases interfere and compel the vendor to keep his engagements. *Lester* v. *Foxcroft*, 1 Colles, Parl. Cas. 108; *Wills* v. *Stradling*, 3 Ves. Jr. 378, 381; *Gregory* v. *Mighell*, 18 Ves. Jr. 328; *Parkhurst* v. *Van Cortland*, 14 Johns. 15.

The obligation of the Kansas Pacific Railway Company to execute the contract by a conveyance of the 25¼-acre tract to the McAlpines passed with the property to the defendant, the Union Pacific Railway Company, upon the consolidation of the two companies under the latter name. Whenever property charged with a trust is conveyed to a third party with notice, he will hold it subject to that trust, which he may be compelled to perform equally with the former

owner. The vendee in that case stands in the place of such owner. *Taylor* v. *Stibbert*, 2 Ves. Jr. 437, 439; *Dunbar* v. *Tredennick*, 2 Ball & B. 304, 319. Without reference, therefore, to the articles of union and consolidation, the Union Pacific Railway Company would, on general principles, be held to complete the contract made with the Kansas Pacific Company; and the articles in specific terms recognize this obligation. The union and consolidation embraced three companies, the Denver Pacific Railway and Telegraph Company as well as the Kansas Pacific Company and the Union Pacific Company. By the 8th article, the three companies transferred to the consolidated company all their rights, privileges, exemptions, and franchises, and all their property, real, personal and mixed, with the appurtenances; with a declaration that the assignment and transfer were made "subject to all liens, charges and equities pertaining thereto." The tenth article exempted the new company from any separate or individual liability for the outstanding debts, obligations or liabilities of the respective constituent companies; but it also provided that nothing therein
[315] contained should "prevent any valid debt, obligation or liability of either constituent company from being enforced against the property of the proper constituent company," which by force of the articles became the property of the consolidated company. The property transferred, which included the 25¼-acre tract, thus passed to the new company, subject to all charges, liens and equities to which it was before subject, and the obligation of the Kansas Pacific Company to make a conveyance of that tract devolved upon the defendant.

The same principle applies also to the mortgage executed in 1879 by the Kansas Pacific Company to Gould and Sage, as trustees, covering the 25¼-acre tract. At that time the order of June 28, 1878, was a matter of record in the books of the Kansas Pacific Company, and the McAlpines were in possession of the tract. Under these circumstances, it may be claimed that the property was taken by the trustees with notice of the rights of the complainants, and, therefore, subject to their enforcement. It is sufficient that the Union Pacific Company cannot set up that mortgage as a release from its obligation to make a conveyance in execution of the contract with the McAlpines.

Decree affirmed.

---

[329] ELSIE WHITE ET AL., *Appts.*,
v.
FREDERICK W. COTZHAUSEN.

(See S. C. Reporter's ed. 329-345.)

Illinois Assignment Act—unlawful preference—rights of creditors.

1. The Illinois Voluntary Assignment Act, in force July 1, 1877, forbidding preferences in assignments, should be liberally construed, so as to suppress the mischief and advance the remedy.

2. An insolvent debtor cannot be permitted to defeat its operation by effecting unequal distribution of his estate by means of conveyances, bills of sale or judgments by confession; and where he attempts to do so, such conveyances, bills of sale and judgments will be set aside.

3. An attempt to obtain an illegal preference does not have the effect of depriving the creditor of his interest, under the statute, in the proceeds of the property of the insolvent debtor, nor give a prior right to a creditor who sues to set aside such illegal preference.

[No. 129.]

Argued Dec. 13, 14, 1888. Decided Jan. 28, 1889.

APPEAL from a decree of the Circuit Court of the United States for the Northern District of Illinois, setting aside certain conveyances, bill of sale, judgment by confession and transfers, as without adequate consideration and made with intent to hinder, delay and defraud a creditor. *Reversed in part.*

The facts are stated in the opinion.

Messrs. **Chas. M. Osborn** and **Ira W. Buell**, for appellants:

A debtor resident of Illinois, although insolvent or in failing circumstances, may prefer one creditor to the exclusion of others when done in good faith and for a valuable consideration.

Tomlinson v. *Matthews*, 98 Ill. 178; *Payne* v. *Miller*, 103 Ill. 442; *Eads* v. *Thompson*, 109 Ill. 87; *Bean* v. *Patterson*, 122 U. S. 496 (30: 1126).

The original bill having called for answers under oath, and such answers having been made denying the material allegations on which relief was prayed, such allegations must be supported by the testimony of two witnesses, or by one witness corroborated by circumstances which are equivalent in weight to another witness.

Southern Development Co. v. *Silva*, 125 U. S. 247 (31: 678); *Morrison* v. *Durr*, 122 U. S. 518 (30: 1225); *Union R. Co.* v. *Dull*, 124 U. S. 173 (31: 417); *Vigel* v. *Hopp*, 104 U. S. 441 (26: 765); Story, Eq. Pl. §§ 875-849a.

Messrs. John C. Spooner and **Enoch Totten**, for appellee:

All the defendants affected by a joint decree should join in the appeal; and if any of them refuse or decline on notice, the others should then be permitted to appeal.

Masterson v. *Herndon*, 77 U. S. 10 Wall, 416 (19: 953); *Todd* v. *Daniel*, 41 U. S. 16 Pet. 521 (10: 1054).

On conveyances by insolvent debtors to members of the same family and household, the burden of showing them to be *bona fide* and supported by a good consideration rests with the party claiming the benefit of the same.

Callan v. *Statham*, 64 U. S. 23 How. 477 (16: 532); *Venable* v. *Bank of U. S.* 27 U. S. 2 Pet. 107 (7: 364); *Bartlett* v. *Mercer*, 8 Ben. 439; *Seitz* v. *Mitchell*, 94 U. S. 580 (24: 179); *Walcott* v. *Almy*, 6 McLean, 23.

When a person acts for a principal, and such fact is known to the party dealing with him, his contract, although executed in his own name, binds his principal equally as though signed in the name of such principal; and parol evidence is admissible to show the fact of his agency in order to charge the principal, notwithstanding the writing is executed by the agent in his own name.

Benj. Sales, § 236; *Trueman* v. *Loder*, 11 Ad. & El. 589-594; *Stowell* v. *Eldred*, 39 Wis. 615; *Taintor* v. *Prendergast*, 3 Hill, 72; *Higgins* v. *Senior*, 8 Mees. & W. 840; *Huntington* v. *Knox*, 7 Cush. 371; Story, Ag. § 410; *Wiener* v. *Whipple*, 53 Wis. 302; *Weston* v. *McMillan*,

42 Wis. 569; *Pope* v. *Meadow Spring Distilling Co.* 20 Fed. Rep. 35.

A sale by one insolvent of all his property is presumptively fraudulent.

Twyne's Case, 1 Sm. Lead. Cas. 52, 59, note 7; *Walcott* v. *Almy*, 6 McLean, 23; *Power* v. *Alston*, 93 Ill. 587; *Singer* v. *Jacobs*, 3 McCrary, 638; *Burdick* v. *Gill*, 2 McCrary, 486.

And this presumption is strengthened where the sale has been made to one in confidential relations with him.

Twyne's Case, 1 Sm. Lead. Cas. 50; *Pickett* v. *Pipkin*, 64 Ala. 520; *Thomas* v. *Beck*, 39 Conn. 241; *Egery* v. *Johnson*, 70 Maine, 258; *Church* v. *Chapin*, 35 Vt. 223.

[330] *Mr. Justice* **Harlan** delivered the opinion of the court:

This is an appeal from a decree declaring two conveyances of real property in Illinois, a bill of sale of numerous pictures, a judgment by confession in one of the courts of that State pursuant to a warrant of attorney given for that purpose, and certain transfers of property accompanying that warrant, to be void as against the appellee, Cotzhausen, a judgment creditor of Alexander White, Jr. It is assigned for error that the decree is not supported by the evidence. Besides controverting this position, the appellee contends that the conveyances, judgment by confession and transfers were illegal and void under the provisions of the Act of the General Assembly of Illinois, in force July 1, 1877, concerning voluntary assignments for the benefit of creditors. 1 S. & C. 1303.

The record contains a large amount of testimony, oral and written; but the principal facts are as follows:

Alexander White, Sr., died intestate in the year 1872, his wife, Ann White, four daughters, Margaret, Elsie, Mary S. and Annie, and two sons, Alexander and James B., surviving him. Each of the children except James was of full age when the father died. At the request of the mother, and with the assent of his sisters, Alexander White, Jr., qualified as administrator and in that capacity received personal assets of considerable value. With their approval, if not by their express direction, he undertook the management of the real estate of which his father died possessed; making improvements, collecting rents, paying taxes and [331] causing repairs to be made. He received realty in exchange for stock in a manufacturing company and in part exchange for the homestead, taking the title in his own name.

After the death of the father, the widow and children remained together as one household, the expenses of the family and of each member of it being met with money furnished by Alexander White, Jr., out of funds he received from time to time and deposited in bank to his credit as administrator. But no regular account was kept showing the amount paid to or for individual members of the family.

In 1878 it was determined by the widow and children to have an assignment of dower and a partition of the real property, and proceedings to that end were instituted in the Circuit Court of Cook County, Illinois. Before the close of that year, or in the spring or summer of 1879, having failed to obtain from the administrator a satisfactory account of the condition of the estate, they consulted an attorney, who, upon investigation, ascertained (using here the words of the appellants' counsel) that Alexander White, Jr., "had lost the entire personal estate, and had nothing except his interest as an heir in certain of the real estate with which to make good his losses." It appeared, as is further stated, that he had mortgaged some of the real property the title to which had been taken in his name; had anticipated rents on other property; had exchanged lands for stock in a heating and ventilating company; had allowed taxes to accumulate; and had, besides, induced some members of the family to guaranty his notes to a large amount. Upon these disclosures being made, the property was put under the immediate charge of the younger son, and the attorney with whom the mother and sisters had advised was directed to collect the amount due from Alexander White, Jr. Thereupon a friendly accounting was had, which resulted in a report by him to the probate court on the 18th of July, 1879, of his acts and doings as administrator during the whole period from the date of his appointment, April 9, 1872, to July 21, 1879. The report admits a balance due from him as administrator, of $89,646.05, and charges him, "by virtue of the statute" (Rev. Stat. Ill. 1874, chap. 3, § 113), with $40,123.80, being interest on that sum from January 21, 1875, to July 21, 1879, at the rate of 10 per cent per annum; in all, the sum of $129,769.85. He does not seem to have asserted any claim whatever for his services as administrator or [332] for managing the real property.

That report was approved by the probate court, which made an order, July 22, 1879, directing the said sum of $129,769.85 to be distributed and paid by the administrator as follows: to the widow, $43,256.61, and to each of the other children, $14,418.87.

It should be stated, in this connection, that on the 16th of July, 1879, two days before the report to the probate court, the proceedings in the partition suit were brought to a conclusion by a decree assigning dower to the widow, and setting off specific parcels of land to Margaret and Alexander respectively, and other parcels to the remaining heirs jointly.

On the same day, Alexander White, Jr., executed two conveyances, one to his sisters (except Margaret) and his brother James, jointly, for part of the lands assigned to him by the decree of partition, and the other to his sister Margaret for the remaining part; the former deed reciting a consideration of $56,859.20, which is about the aggregate of the several amounts subsequently directed to be paid by the administrator to his brother and sisters (except Margaret), while the latter deed recited a consideration of $14,214.80, which is about the sum directed to be paid to his sister Margaret. Two days later, July 18, 1879, Alexander White, Jr., executed to his mother, brother, and sisters (except Margaret), a bill of sale of his interest in certain pictures which had come to his hands as administrator. And, three days thereafter, July 21, 1879, he executed to his mother a note, accompanied by a warrant of attorney to confess judgment, and by a conveyance and transfer of certain real and personal property as collateral security for the

note. Subsequently, September 4, 1879, pursuant to that warrant of attorney, judgment was entered against Alexander White, Jr., for $43,807.50, in the Circuit Court of Cook County. It is not claimed that any money was paid to him in these transactions; and it is admitted that the sole consideration for his transfers of property to the members of his family was his alleged indebtedness to them respectively.

By the final decree in these consolidated [333] causes, it was adjudged that the two conveyances of July 16, 1879, the bill of sale of July 18, 1879, and the judgment by confession of September 4, 1879, and the transfers accompanying the warrant of attorney of July 21, 1879, were made without adequate consideration and with intent to hinder, delay and defraud the appellee Cotzhausen, who was found by the decree to be a creditor of Alexander White, Jr., in the sum of $27,842.22, the aggregate principal and interest of four several judgments obtained by him against White, in 1881 and 1882. The debts for which these judgments were rendered originated in the early part of 1878, in a purchase from Cotzhausen of nearly all the stock of the American Oleograph Company, whose principal place of business was Milwaukee, Wisconsin. In this purchase Alexander White, Jr., was interested. It is to be inferred from the evidence that the principal object he had in making it was to transfer the office of the company to one of the buildings owned by the family in Chicago, and to start or establish his younger brother in business. His mother and sisters were evidently aware of this purchase and approved the object for which it was made.

It may be here stated that Margaret White died unmarried and intestate before the decree in this cause was entered, but the fact of her death was not previously entered of record. The parties to the present appeal, however, have, by written stipulation filed in this cause, waived all objections they might otherwise make by reason of that fact. It is further stipulated that the appellants are the only heirs at law of Margaret White. The appellee waives all objections to the present appeal on the ground that Alexander White, Jr., did not join in it.

Too much stress is laid by the appellee upon the fact that Alexander White, Jr., after qualifying as administrator, was authorized by his mother and sisters to control, in his discretion, both the real and personal estate of which his father died possessed. The granting of such authority cannot be held to have created any lien in favor of his creditors, upon their respective interests. Nor can it be said that they surrendered their right to demand from him an accounting in respect to his management of the property. Upon such accounting, he might become indebted to them; and, to the extent that he was justly so indebted, they would be his creditors, with the same right that other unsecured creditors had to obtain satisfaction of their claims. The mode adopted by them to that end, with full knowledge as well of his financial condition as of the fact that he was being pressed by Cotzhausen, was to take property on account of their respective claims. After he had executed the conveyances, bill of sale, warrant of attorney, and transfers, to which reference has been made, he was left without anything that could be reached by Cotzhausen. So completely was he stripped by these transactions of all property that, subsequently, when his deposition was taken, he admitted that he owned nothing except the clothing he wore. He recognized his hopelessly insolvent condition, and formed the purpose of yielding to creditors the dominion of his entire estate. And it is too plain to admit of dispute that in executing to his mother, sisters and brother the conveyances, bill of sale, warrant of attorney and transfers in question [337] his intention was to give them, and their intention was to obtain, a preference over all other creditors. What was done was in execution of a scheme for the appropriation of his entire estate by his family to the exclusion of other creditors, thereby avoiding the effect of a formal assignment.

The first question, therefore, to be considered is, whether the several writings executed by Alexander White, Jr., for the purpose of effecting that result, may be regarded as, in legal effect, one instrument, designed to evade or defeat the provisions of the Statute of Illinois, known as the Voluntary Assignment Act, in force July 1, 1877.

The first section of that statute provides: "That in all cases of voluntary asssignments hereafter made for the benefit of creditor or creditors, the debtor or debtors shall annex to such assignment an inventory, under oath or affirmation, of his, her or their estate, real and personal, according to the best of his, her or their knowledge; and also a list of his, her or their creditors, their residence and place of business, if known, and the amount of their respective demands; but such inventory shall not be conclusive as to the amount of the debtor's estate, but such assignment shall vest in the assignee or assignees the title to any other property, not exempt by law, belonging to the debtor or debtors at the time of making the assignment, and comprehended within the general terms of the same. Every assignment shall be duly acknowledged and recorded in the county where the person or persons making the same reside, or where the business in respect of which the same is made has been carried on; and in case said assignment shall embrace lands, or any interest therein, then the same shall also be recorded in the county or counties in which said land may be situated."

Other sections provide for publication of notices to creditors; for the execution by the assignee of a bond and the filing of an inventory in the county court; for the report of a list of all creditors of the assignor; and for exception, by any person interested, to the claim or demand of any other creditor.

The sixth section provides "that at the first term of the said county court, after the expira- [338] tion of three months, as aforesaid, should no exception be made to the claim of any creditor, or if exceptions have been made, and the same have been adjudicated and settled by the court, the said court shall order the assignee or assignees to make, from time to time, fair and equal dividends (among the creditors) of the assets in his or their hands, in proportion to their claims," etc.

The eighth section declares that "No assignment shall be declared fraudulent or void for want of any list or inventory as provided in the first section."

The thirteenth section is in these words: "Every provision in any assignment hereafter made in this State providing for the payment of one debt or liability in preference to another shall be void, and all debts and liabilities within the provisions of the assignment shall be paid *pro rata* from the assets thereof."

The main object of this legislation is manifest. It is to secure equality of right among the creditors of a debtor who makes a voluntary assignment of his property. It annuls every provision in any assignment giving a preference of one creditor over another. No creditor is to be excluded from participation in the proceeds of the assigned property because of the failure of the debtor to make and file the required inventory of his estate and the list of his creditors. Nor, if such a list is filed, is any creditor to be denied his *pro rata* part of such proceeds because his name is omitted, either by design or mistake upon the part of the debtor. The difficulty with the courts has not been in recognizing the beneficent objects of this legislation, but in determining whether, in view of the special circumstances attending their execution, particular instruments are to be treated as part of an assignment, within the meaning of the statute.

The leading case upon this subject in the Supreme Court of Illinois is *Preston* v. *Spaulding*, 120 Ill. 208 [8 West. Rep. 481]. In that case the members of an insolvent firm, in anticipation of bankruptcy, made, within a period of less than thirty days, four conveyances of their individual estate to near relatives, and various payments of money to other relatives, on al-
[339] leged debts. After these conveyances and payments, and with full knowledge of impending failure, the members of the firm held a conference with their legal advisers before the expiration of said thirty days, respecting the measures to be adopted by them and the shape their failure was to assume. It was determined that they should make a voluntary assignment, but that preference be given to certain creditors by executing to them what are called judgment notes. The assignment in form was made, but on the same day and before it was executed, the creditors to whom the notes were given caused judgment by confession to be entered thereon, and immediately, and before the deed of assignment was or could be filed, caused execution to be issued and levied, whereby they took to themselves the great bulk of the debtor's estate. The trustee, named in the assignment, having refused to attack the preferences thus secured, a creditor brought suit in equity upon the theory that the giving of the judgment notes and the making of the deed of assignment were parts of one transaction, and, consequently, the preferences attempted were illegal and void under the statute. The Supreme Court of Illinois, considering the question whether the preferential judgments obtained in that case were within the prohibitions of the Act of 1877, said: "The statute is silent as to the form of the instrument or instruments by which an insolvent debtor may effect an assignment . . . If, then, these preferences are to be held to be within the 'provisions' of the assignment or 'comprehended within its general terms,' it must be because they fall within the intent and spirit of the Act. It will be observed, this Act does not assume to interfere, in the slightest degree, with the action of a debtor, while he retains the dominion of his property. Notwithstanding this Act, he may now, as heretofore, in good faith sell his property, mortgage or pledge it to secure a *bona fide* debt, or create a lien upon it by operation of law, as, by confessing a judgment in favor of a *bona fide* creditor. But when he reaches the point where he is ready, and determines, to yield the dominion of his property, and makes an assignment for the benefit of his creditors, under the statute, this Act declares that the effect of such assignment shall be the surrender and conveyance of all [340] his estate, not exempt by law, to his assignee—rendering void all preferences and bringing about the distribution of his whole estate equally among his creditors; and we hold that it is within the spirit and intent of the statute, that when the debtor has formed a determination to voluntarily dispose of his whole estate, and has entered upon that determination, it is immaterial into how many parts the performance or execution of his determination may be broken, the law will regard all his acts having for their object and effect the disposition of his estate, as parts of a single transaction, and, on the execution of the formal assignment, it will, under the statute, draw to it, and the law will regard as embraced within its provisions, all prior acts of the debtor having for their object and purpose the voluntary transfer or disposition of his estate to or for creditors; and if any preferences are shown to have been made or given by the debtor to one creditor over another in such disposition of his estate, full effect will be given the assignment; and such preferences will, in a court of equity, be declared void, and set aside as in fraud of the statute."

After setting out the details of the plan devised to secure certain creditors a preference in advance of the filing of the deed of assignment, the court further said: "It will be observed that all this was strictly in accordance with the *forms* of law; but will anyone deny that a most palpable fraud was, in fact, perpetrated upon the appellee Spaulding, by the debtors, or that the acts of the debtors were in fraud of the statute? . . . This Voluntary Assignment Act is in its character remedial, and must, therefore, be liberally construed; and no insolvent debtor, having in view the disposition of his estate, can be permitted to defeat its operation by effecting unequal distribution of his estate by means of an assignment, and any other shift or artifice under the forms of law; and whatever obstacles might be encountered in other courts of this State, a court of equity, when properly invoked, was bound to look through and beyond the form, and have regard to the substance, and having done so, to find and declare these preferential judgments void, under the statute, and to set them aside." See [341] also *Miners Nat. Bank's App.* 57 Pa. 193, 199; *Winner* v. *Hoyt*, 66 Wis. 227, 239; *Wilks* v. *Walker*, 22 S. C. 108, 111.

We agree with the Supreme Court of Illinois

that this statute, being remedial in its character, must be liberally construed; that is, construed "largely and beneficially, so as to suppress the mischief and advance the remedy." That court said in *Chicago, B. & A. R. Co.* v. *Dunn*, 52 Ill. 260, 263: "The rule in construing remedial statutes, though it may be in derogation of the common law, is, that everything is to be done in advancement of the remedy that can be done consistently with any fair construction that can be put upon it." See also *Johnes* v. *Johnes*, 3 Dow, Parl. Cas. 15. If, then, we avoid over strict construction, and regard substance rather than form; if effect be given to this legislation, as against mere devices that will defeat the object of its enactment, the several writings executed by Alexander White, Jr., all about the same time, to his mother, sisters, and brother, whereby, in contemplation of his bankruptcy, and according to a plan previously formed, he surrendered his entire estate for their benefit, to the exclusion of all other creditors, must be deemed a single instrument, expressing the purposes of the parties in consummating one transaction, and operating as an assignment or transfer under which the appellee, Cotzhausen, may claim equality of right with the creditors so preferred. It is true there was not here, as in *Preston* v. *Spaulding*, a formal deed of assignment by the debtor under the statute. But of what avail will the statute be in securing equality among the creditors of a debtor who, being insolvent, has determined to yield the dominion of his entire estate, and surrender it for the benefit of creditors, if some of them can be preferred by the simple device of not making a formal assignment, and permitting them, under the cover or by means of conveyances, bills of sale, or written transfers, to take his whole estate on account of their respective debts, to the exclusion of other creditors? If Alexander White, Jr., intending to surrender all his property for the benefit of his creditors, and to stop business, had excepted from the conveyances, bill of sale and transfers, executed to his mother, sisters and brother, a relatively small amount of property, and had shortly thereafter made a general assignment under the statute, it could not be doubted, under the decision in *Preston* v. *Spaulding*, and in view of the facts here disclosed, that such conveyances, bill of sale and transfers would have been held void as giving forbidden perferences to particular creditors; and his assignment would have been held, at the suit of other creditors, to embrace not simply the property owned by him when it was made, but all that he previously conveyed, sold, and transferred to his mother, sisters, and brother. But can he, having the intention to quit business and surrender his entire estate to creditors, be permitted to defeat any such result by simply omitting to make a formal assignment, and by including the whole of his property in conveyances, bills of sale, and transfers to the particular creditors whom he desires to prefer? Shall a failing debtor be allowed to employ indirect means to accomplish that which the law prohibits to be done directly? These questions must be answered in the negative. They could not be answered otherwise without suggesting an easy mode by which the entire object of this legislation may be defeated.

[342]

We would not be understood as contravening the general principle, so distinctly announced by the Supreme Court of Illinois, that a debtor, even when financially embarrassed, may in good faith compromise his liabilities, sell or transfer property in payment of debts, or mortgage or pledge it as security for debts, or create a lien upon it by means even of a judgment confessed in favor of his creditors. *Preston* v. *Spaulding; Field* v. *Geohegan*, 125 Ill. 70 [14 West. Rep. 387]. Such transactions often take place in the ordinary course of business, when the debtor has no purpose, in the near future, of discontinuing business or of going into bankruptcy and surrendering control of all his property. A debtor is not bound to succumb under temporary reverses in his affairs, and has the right, acting in good faith, to use his property in any mode he chooses, in order to avoid a general assignment for the benefit of his creditors. We only mean, by what has been said, that when an insolvent debtor recognizes the fact that he can no longer go on in business, and determines to yield the dominion of his entire estate, and in execution of that purpose, or with an intent to evade the statute, transfers all, or substantially all, his property to a part of his creditors, in order to provide for them in preference to other creditors, the instrument or instruments by which such transfers are made, and that result is reached, whatever their form, will be held to operate as an assignment, the benefits of which may be claimed by any creditor not so preferred, who will take appropriate steps in a court of equity to enforce the equality contemplated by the statute. Such we think is the necessary result of the decisions in the highest court of the State.

[343]

The views we have expressed find some support in adjudged cases in the Eighth Circuit, where the courts have construed the Statute of Missouri providing that "Every assignment of lands, tenements, goods, chattels, effects and credits made by a debtor to any person in trust for his creditors, shall be for the benefit of all the creditors of the assignor in proportion to their respective claims." Referring to that statute, Krekel, *J.*, said, in *Kellog* v. *Richardson*, 19 Fed. Rep. 70, 72—following the previous case of *Martin* v. *Hausman*, 14 Fed. Rep. 160—: "A merchant may give a mortgage or a deed of trust of part or all of his property, to secure one or more of his creditors, thus preferring them; but he cannot convey the whole of his property to one or more creditors and stop doing business. Such turning over and virtually declaring insolvency brings the instrument or act by which it is done within the Assignment Law of Missouri, which requires a distribution of the property of the failing debtor for the benefit of all the creditors in proportion to their respective claims. Such is the declared policy of the law; it places all creditors upon an equal footing." So in *Kerbs* v. *Ewing*, 22 Fed. Rep. 693, where *Judge* McCrary, referring to the Missouri Statute, said: "No matter what the form of the instrument, where a debtor, being insolvent, conveys all his property to a third party, to pay one or more creditors, to the exclusion of others, such a conveyance will be construed to be an assignment for the benefit of all the creditors; the pref-

erence being in contravention of the Assignment Laws of this State." Again, in *Freund* v. *Yaegerman*, 26 Fed. Rep. 812, 814, it was said by Treat, *J.*, that the conclusion reached by *Mr. Justice* Miller and *Judges* McCrary, Krekel, and himself, was "that under the Statute of the State of Missouri concerning voluntary assignments, when property was disposed of in entirety or substantially—that is, the entire property of the debtor, he being insolvent—it fell within the provisions of the Assignment Law. The very purpose of the law was that no preference should be given. No matter by what name the end is sought to be effected, it is in violation of that statute. You may call it a mortgage, or you may make a confession of judgment, or use any other contrivance, by whatever name known, if the purpose is to dispose of an insolvent debtor's estate, whereby a preference is to be effected, it is in violation of the statute." See also *Perry* v. *Corby*, 21 Fed. Rep. 737; *Clapp* v. *Dittman*, 21 Fed. Rep. 15; *Clapp* v. *Nordmeyer*, 25 Fed. Rep. 71.

344] If Alexander White, Jr., had made a formal assignment of his entire property in trust for the benefit, primarily or exclusively, of his mother, sisters and brothers, as creditors, its illegality would have been so apparent that other creditors would have been allowed to participate in the proceeds of sale. By the conveyances, bill of sale, confession of judgment and transfers, all made about the same time, and pursuant to an understanding previously reached, he has effected precisely the same result as would have been reached by a formal assignment to a trustee for the exclusive benefit of his mother, brother and sisters. The latter is forbidden by the letter of the statute, and the former is equally forbidden by its spirit. Surely, the mere name of the particular instruments by which the illegal result is reached ought not to be permitted to stand in the way of giving the relief contemplated by the statute. Courts of equity are not to be misled by mere devices, nor baffled by mere forms.

It remains only to consider the effect of these views upon the decree below. We have already seen that the circuit court proceeded upon the ground that the conveyances, bill of sale, confession of judgment and transfers by 345] Alexander White, Jr., were made without adequate consideration and with intent to hinder, delay and defraud the appellee. Upon these grounds it gave him a prior right in the distribution of the property. We are not able to assent to this determination of the rights of the parties; for the mother, sisters and brother of Alexander White, Jr., were his creditors, and, so far as the record discloses, they only sought to obtain a preference over other creditors. But their attempt to obtain such illegal preference ought not to have the effect of depriving them of their interest, under the statute, in the proceeds of the property in question, or justify a decree giving a prior right to the appellee. It was not intended, by the statute, to give priority of right to the creditors who are not preferred. All that the appellee can claim is to participate in such proceeds upon terms of equality with other creditors.

It results that the decree below is erroneous, so far as it directs the property, rights and interests therein described to be sold in satisfaction primarily of the sums found by the decree to be due from Alexander White, Jr., to the appellee. The case should go to a master to ascertain the amount of all the debts owing by Alexander White, Jr., at the date of said conveyances, bill of sale, and transfers. In respect to the amounts due from him to his mother, sisters and brother, respectively, it is not necessary at this time, to express any opinion, further than that the accounting in the probate court between them is not conclusive against the appellee. It will be for the court below to determine under all evidence, what amounts are justly due from Alexander White, Jr., to his mother, sisters and brother, taking into consideration all the circumstances attending his management of the property, formerly owned by his father, whether real or personal.

To the extent we have indicated, the decree is reversed, each side paying one half the costs in this court; and the cause is remanded, with a direction for further proceedings not inconsistent with this opinion.

The **Chief Justice** did not sit in this case or participate in its decision.

THE NATIONAL SECURITY BANK, [223]
Plff. in Err.,
v.
PETER BUTLER, Receiver of the PACIFIC NATIONAL BANK.

(See S. C. Reporter's ed. 223-233.)

Transfer by national bank in contemplation of insolvency, void—intent of transferee—subsequent agreement—declaration.

1. It is sufficient, under section 5242 of the Revised Statutes, to invalidate a transfer by a national bank, that it was made in contemplation of insolvency, and either with a view to prevent the application of the assets of the bank in the manner prescribed by chapter 4 of title 62 of the Revised Statutes, or with a view to the preference of one creditor to another.

2. A transfer of assets of the bank to a creditor bank, made after the directors had voted that the bank should go into liquidation, and should be closed, and that a receiver should be appointed, was made in contemplation of insolvency and with a view to prevent the application of its assets in the manner prescribed by chapter 4 of title 62, and to prefer the creditor bank to other creditors.

3. The statute makes such a transfer void, although there was no such view on the part of the creditor bank in receiving the transfer of the assets, and although there was no knowledge or suspicion at that time on its part that the transferring bank was insolvent or contemplated insolvency, or was not doing business, or that its directors had voted to close it, or that application was to be made for a receiver; and although the transfer took place before the application for a receiver was made, the intent to prefer was a necessary conclusion.

4. Any subsequent agreement between the two banks, made after the receiver had been actually appointed, cannot affect his rights.

5. Where no objection to the declaration was made at the trial or before, and no ruling on the subject was asked, and the defendant did not request at the trial that the plaintiff should elect on which count he would ask a verdict, the objection cannot be taken in this court that the counts of the declaration were inconsistent with each other.

[No. 166.]

Argued Jan. 14, 1889. Decided Jan. 28, 1889.

IN ERROR to the Circuit Court of the United States for the District of Massachusetts, to review a judgment in favor of a receiver of a national bank in an action to recover of another national bank the amount of the assets of the former, transferred to the latter bank, in contemplation of insolvency. *Affirmed.*

Reported below, 22 Fed. Rep. 697.

The facts are stated in the opinion.

Messrs. **J. C. Coombs** and **Russell Gray,** for plaintiff in error:

There must be an act of insolvency, that is, a failure to redeem circulating notes.

Roberts v. *Hill,* 23 Blatchf. 191; 23 Fed Rep. 311.

Only one kind of payment is void, namely: that in which the state or contemplation of insolvency and the intent to prefer concur.

Case v. *Citizens Bank,* 2 Woods, 23.

The result is not always evidence of the supposed intent.

Jones v. *Howland,* 8 Met. 377, 386.

Payment made in the usual course of dealing cannot be said to have been made in contemplation of insolvency.

Dutcher v. *Importers & T. Nat. Bank,* 59 N. Y. 5, 11; *Roberts* v. *Hill,* 23 Blatchf. 312, 317; 24 Fed. Rep. 571, 574; *Cragie* v. *Hadley,* 99 N. Y. 131.

The weight of evidence as to intent was for the jury.

Bills v. *Smith,* 6 Best & S. 314, 321.

The receiver may treat a preference as void or as valid, but he cannot do both.

Smith v. *Hodson,* 4 T. R. 211; *Butler* v. *Hildreth,* 5 Met. 49; *Snow* v. *Lang,* 2 Allen, 18.

A general verdict on two counts, one of which is good and the other bad, must be set aside.

Grant v. *Astle,* 2 Doug. 722, 730; *Empson* v. *Griffin* 11 Ad. & El. 186; *York* v. *Johnson,* 116 Mass. 482; *Md.* v. *Baldwin,* 112 U. S. 490, 493 (28: 822, 823).

Mr. **A. A. Ranney,** for defendant in error:

There were acts of insolvency, and in contemplation of actual insolvency proceedings, under the Banking Act and within the provisions of Revised Statutes, § 5242, before the transaction in dispute.

The exception to the ruling of the court below on that point seems to be frivolous.

First Nat. Bank v. *Colby,* 88 U. S. 21 Wall. 609 (22: 687); *Raynor* v. *Pacific Nat. Bank,* 17 Jones & S. 119; *S. C.* 93 N. Y. 371; *Irons* v. *Manufacturers Nat. Bank,* 6 Biss. 301; *Market Nat. Bank* v. *Pacific Nat. Bank,* 30 Hun, 50; *Robinson* v. *Newberne Nat. Bank,* 81 N.Y. 385; *Re Manufacturers Nat. Bank,* 5 Biss. 499; *Case* v. *Citizens Bank,* 2 Woods, 23; *Richmond* v. *Irons,* 121 U. S. 28 (30: 866); 2 Morawetz, Priv. Corp. § 787; *Wood* v. *Dummer,* 3 Mason, 308, 311.

The vote of the directors of May 20, 1882, terminated the power of the cashier to do business.

Harrington v. *First Nat. Bank,* 1 Thomp. & C. 361; *Brown* v. *Adams,* 5 Biss. 181.

The transaction comes within the prohibition contained in Revised Statutes § 5242.

Watson v. *Taylor,* 88 U. S. 21 Wall. 378 (22 576; *Forbes* v. *Howe,* 102 Mass. 427.

The Banking Act makes the transfer or payment prohibited absolutely void.

Peckham v. *Burrows,* 3 Story, 544; *Case* v. *Citizens Bank,* 2 Woods, 23; *Roberts* v. *Hill,* 24 Fed. Rep. 571.

The Security Bank must be held as bailee or trustee.

Marr v. *Bank of West Tenn.* 4 Coldw. 472; *Libby* v. *Hopkins,* 104 U. S. 303 (26: 769); *Traders Nat. Bank* v. *Campbell,* 81 U. S. 14 Wall. 97 (20: 834).

Mr. Justice **Blatchford** delivered the opinion of the court:

This is an action at law, brought in the District Court of the United States for the District of Massachusetts, in November, 1882, by the Receiver of the Pacific National Bank, a corporation duly organized under the Banking Laws of the United States, against the National Security Bank, another corporation so organized.

The declaration contains three counts. The first count alleges that the Pacific National Bank became insolvent and failed; that the Comptroller of the Currency, on the 22d of May, 1882, appointed the plaintiff, Linus M. Price, receiver of the same; that the bank stopped business and closed its doors on the 20th of May, 1882, being insolvent and unable to pay its debts; that steps were, on that day, taken to represent it to said comptroller as insolvent and to have a receiver appointed to close it up; that it was determined on the 20th of May, 1882, not to open its doors or carry on business longer; that, on that day, the Security Bank was owing to the Pacific Bank, in account, as balance on book, $40.25, and the former bank also held against the latter a certificate of deposit for $10,000; that, on the 22d of May, 1882, the Pacific Bank, through its cashier, although it was then insolvent and contemplated insolvency, and had then actually failed and stopped business and taken said steps for the appointment of a receiver, transferred and delivered to the Security Bank certain checks, drafts, bills and other property, amounting on their face to the sum of $10,967.95, which, with the said $40.25, made the sum of $11,008.20; that the Security Bank thereupon gave to the cashier of the Pacific Bank a certificate of deposit, as follows: [224]

"No. 6216 NATIONAL SECURITY BANK,
"$11,008$\frac{20}{100}$. BOSTON, May 22, 1882.

"E. C. Whitney, cash., has deposited in this bank eleven thousand and eight$\frac{20}{100}$ dollars, payable to the order of himself on the return of this certificate properly indorsed.

"CHAS. R. BATT, *Cashier;*"

that the Security Bank collected the money upon the said checks, etc.; that the said certificate of deposit came to the hands of the plaintiff as receiver among the other assets of the Pacific Bank; that, on a demand made by him, the Security Bank refused to deliver or pay the said property, or its avails, claiming a right to set it off or apply it on the said certificate of deposit for $10,000; that, on the 20th of May, 1882, the Pacific Bank was insolvent; that it and its directors and officers well knew the same and contemplated insolvency; that it was in the same condition on the 22d of May, 1882; that the said transfer of property to the Security Bank was in fraud of the creditors of the [225]

Pacific Bank with a view of giving the former bank a preference over other creditors by having the same operate as a payment of the debt due to the Security Bank by the Pacific Bank, by way of set-off or otherwise; that the said transfer was illegal, and if allowed to operate as a set-off or payment would work an unlawful preference, and that the Pacific Bank, and its officers and cashier, well knew, when the transfer was made, that the property or its proceeds, when collected, would or might be availed of for the payment of the debt due the Security Bank by way of set-off or otherwise, and contemplated the same, or was bound and is presumed by law to have contemplated and intended the same.

The second count of the declaration alleges the giving of the certificate of deposit for $11,008.20; that the plaintiff, as receiver, presented to the Security Bank said certificate, duly indorsed, and demanded payment thereof; but that the defendant refused to pay it. The third count alleges that the defendant owes to the plaintiff, as receiver, $11,008.20, as and for money had and received by the defendant to the use of the plaintiff. The declaration demands the recovery of $11,008.20, with interest.

The defendant filed an answer and a declaration in set-off. The substance of these papers is, that the defendant has a claim in set-off against the Pacific Bank for the amount of the certificate of deposit of the latter bank for $10,000, which was as follows:

"THE PACIFIC NATIONAL BANK OF BOSTON, MASS.,

"$10,000. BOSTON, May 13th, 1882.

"This certifies that there has been deposited in this bank ten thousand dollars, payable to the order of Nat. Security Bank on return of this certificate properly indorsed.

"No. 2513. E. C. WHITNEY, *Cashier.*

"(Countersigned) G. H. BENYON, *Teller.*"

226] The plaintiff put in an answer to the defendant's declaration in set-off, making substantially the same averments which are contained in the first count of the plaintiff's declaration.

On these issues there was a trial by a jury, which resulted in a verdict for the plaintiff for $12,232.88, and a judgment for him for that amount, with costs. The case was taken to the circuit court by the defendant, by a writ of error, and it affirmed the judgment of the district court, with costs. The opinion of the circuit court is reported in 22 Fed. Rep. 697. The plaintiff brought the case to this court by a writ of error; and afterwards Peter Butler, as successor of Price, as receiver, became plaintiff in error.

There was a bill of exceptions taken by the defendant in the district court. It states that the three counts of the plaintiff's declaration were all for the same cause of action, and that the right of action contained in the first count was founded upon section 5242 of the Revised Statutes. That section provides as follows: "All *transfers* of the notes, bonds, bills of exchange, *or* other evidences of debt owing to any *national banking* association, or of deposits to its credit; all assignments of mortgages, sureties on real estate, or of judgments or decrees in its favor; all deposits of money, bullion or other valuable things for its use, or for the use of any of its shareholders or creditors; and all payments of money to either, made after the commission of an act of insolvency, or in contemplation thereof, *made* with a view to prevent the application of its assets in the manner prescribed by this *chapter*, or with a view to the preference of one creditor to another, except in payment of its circulating notes, shall be utterly null and void."

That section is incorporated in the Revised Statutes from section 52 of the Act of June 3, 1864, chap. 106 (13 Stat. at L. 115). The two sections differ in these respects: the word "transfer" becomes "transfers;" the words "and other" become "or other;" the words "any association" become "any national banking association;" the words "with a view to prevent" become "made with a view to prevent;" and the words "this Act" become "this chapter." No change was made in the meaning of the statute by inserting in section 5242 the word "made," not found in section 52 of the Act of 1864.

The bill of exceptions states that it was ad- [227]
mitted at the trial that the $40.25 was on deposit in the Security Bank before the commission of any act of insolvency by the Pacific Bank, and that as to so much of the plaintiff's claim the set-off was a good answer. As to the rest of the claim, the following facts were proved or admitted:

"On Saturday, May 20, 1882, the Pacific Bank, which had previously failed in November, 1881, and had afterwards reorganized and done business, being deeply insolvent, its directors held a meeting in the afternoon after the regular close of business for the day, and passed these votes, which votes and the proposed action the directors purposely kept concealed until they were carried out: 'Voted, To go into liquidation. Voted, That the bank be closed to business. Voted, That Lewis Coleman, president, Micah Dyer, Jr., Andrew F. Reed, directors, and William J. Best, be and hereby are appointed a committee to proceed to Washington to confer with the Hon. John J. Knox, Comptroller of the Currency, as to the measures proper to be taken in the present situation; that, if the comptroller shall deem it necessary to appoint a receiver, the directors unanimously recommend for that position Mr. E. C. Whitney, who, since March 18, has discharged the duties of cashier with great ability, diligence and energy, and who is perfectly familiar with the assets, liabilities and affairs of the bank and thoroughly understands the steps necessary to be taken to speedily and profitably realize upon the estate to the fullest extent; that, if Mr. E. C. Whitney shall be appointed receiver of the bank, the directors will furnish satisfactory bonds for the faithful discharge of his duties, to any amount which the comptroller may require."

"And the bank never after did any business except so far as appears in this bill. The committee of the directors went to Washington on Saturday night, and on Monday, May 22, saw the comptroller, who appointed the plaintiff receiver about ten o'clock A. M., and the plaintiff left Washington on Monday and on the following day arrived in Boston and took possession of the bank.

"For some time before this, and ever since

[228] the resuscitation of the bank after its first failure, the Pacific Bank, not being a member of the Boston clearing house, had been in the habit daily, of depositing with the defendant all checks received by the Pacific Bank, to be collected through the clearing house by the defendant, with which the Pacific Bank was credited as a depositor and against which it drew.

"On Monday morning, May 22, Whitney, the cashier of the Pacific Bank, received by mail, as usual, many letters inclosing drafts, and checks, and sent all these checks and drafts, amounting to $10,967.95, to the defendant bank, where they were received and forthwith sent to the clearing house, with other checks, to be cleared, by defendant.

"The messenger who carried the checks to the defendant took at the same time and presented to the defendant a check drawn by Whitney for $11,008.20, being the whole amount of the checks then deposited, and $40.25 already to the credit of the Pacific Bank on its current deposit account with the defendant.

"The defendant's paying teller, at the messenger's request, gave him the defendant's negotiable certificate of deposit, payable on demand, for the said sum of $11,008.20. The defendant at that time held the negotiable certificate of deposit of the Pacific Bank, payable on demand for $10,000." The copies of those certificates are hereinbefore set forth.

"These transactions took place as early as half past nine on the morning of May 22, and no officer of the defendant bank then knew or suspected that the Pacific Bank was insolvent or contemplating insolvency, or was not doing business as usual, or that its directors had voted to close it, or that application was to be made for a receiver; and no application had, in fact, at that time been made to the comptroller, it being made about 10 A. M. of that day." The parties had duly demanded of each other payment of their respective claims.

The bill of exceptions also states as follows: "There was other evidence given in the case on both sides, and particularly on the question whether any, and if any, what, agreement was afterwards made between Whitney, the cashier of the Pacific Bank, and Batt, the cashier [229] of the defendant bank, as to the terms and conditions on which the deposit made on May 22d, as above stated, should be held by the defendant, part of this evidence consisting of a letter from Whitney to Batt." It then proceeds: "The defendant requested the judge to submit to the jury the three following questions: First, whether or not there was in fact any view or intent on the part of the Pacific Bank, or any of its officers, to give a preference to the defendant over other creditors, or to prevent the application of the assets of the Pacific Bank in the manner prescribed in the Bank Act; second, whether or not any subsequent agreement was made varying the relation of the two banks as they existed at the time the checks were deposited; third, if the jury answer the preceding question in the affirmative, whether or not such agreement was expressed in Whitney's letter. The defendant at the same time prayed the judge to give several rulings on matters of law applicable to the facts as they might be found by the jury, on the above issues. But the judge refused to submit the above or any questions whatever to the jury, or to give any of the rulings prayed for, on the ground that the issues were immaterial, and that there was no question for the jury, and ruled, as matter of law, that, on the undisputed facts in the case, the plaintiff was entitled to recover the amount of the checks and drafts deposited by the Pacific Bank in defendant's bank on Monday."

The court directed a verdict for the plaintiff for $12,232.88, that being the amount of the checks and drafts, with interest from the date of the writ, and the defendant excepted to such rulings and refusals to rule.

The view taken by the circuit court was that, under section 5242, the transfer or payment by a bank, to be void, must be made after the commission of an act of insolvency, or in contemplation thereof, and with a view to prevent the application of its assets as provided by law, or with a view to giving a preference to one creditor over another; that the undisputed facts of the case showed that the act of the cashier could, under the circumstances, have no other result, if allowed to stand, than to operate as a preference in favor of the Security Bank; that [230] the Pacific Bank had decided to close its doors and go into liquidation; that after that the necessary consequence of the transfer was to create a preference; that it could not be said that the transfer was made with the intention of going on in business, nor could it be contended that it was made to save the credit of the bank; and that, after the vote of the directors to close the bank and go into liquidation, any transfer of its assets to a creditor, whereby that creditor secured a preference, must be presumed to be made with an intent to prefer. We concur in this view of the case.

The directors of the Pacific Bank held a meeting on the afternoon of Saturday, May 20, 1882, after the regular close of business for that day, and passed three votes: (1) to go into liquidation; (2) that the bank be closed to business; (3) that the president, two directors, and another person, be a committee to go to Washington and confer with the Comptroller of the Currency as to the measures proper to be taken, and that, if the comptroller should deem it necessary to appoint a receiver, the directors unanimously recommended for that position Mr. Whitney, the cashier, and that, if he should be appointed receiver, the directors would furnish satisfactory bonds for his faithful discharge of the duties, to any amount which the comptroller might require. These votes and the proposed action the directors purposely kept concealed. The bank never afterward did any business, except so far as appeared in the bill of exceptions. The committee of the directors went to Washington on Saturday night, and on Monday, May 22, 1882, saw the comptroller, who appointed Mr. Price to be the receiver, about 10 o'clock A. M., and he left Washington on Monday and on Tuesday arrived in Boston and took possession of the bank.

Although the Pacific Bank, not being a member of the Boston clearing house, had been in the habit of daily depositing the checks received by it with the defendant, to be collected by the latter through the clearing house, the

Pacific Bank being credited as a depositor and drawing on the Security Bank against the checks; and although it was in accordance with that custom that Mr. Whitney, the cashier [231] of the Pacific Bank, sent the checks and drafts, amounting to $10,967.95, to the Security Bank, on Monday, May 22, 1882, to be cleared by it, drawing for the $11,008.20 at the time, and receiving in return, on its own request, from the Security Bank, a negotiable certificate of deposit of that bank, payable to the order of Mr. Whitney on the return of the certificate properly indorsed; yet Mr. Whitney knew at the time of these transactions that the certificate of deposit for $10,000, given by him to the Security Bank nine days before, created an indebtedness of the Pacific Bank to the Security Bank for that amount, and was, though negotiable, presumably still held by that bank. It was in fact still held by it. The natural presumption was that, if the certificate were still held by the Security Bank, that bank would, as soon as it should learn that the Pacific Bank was closed to business, seek to retain out of the collections the amount of such certificate, and apply that amount to its payment.

It is sufficient, under section 5242 of the Revised Statutes, to invalidate such a transfer, that it is made in contemplation of insolvency, and either with a view to prevent the application of the assets of the bank in the manner prescribed by chapter 4 of title 62 of the Revised Statutes, or with a view to the preference of one creditor to another. Certainly, the transfer in question was made in contemplation of insolvency, made as it was after the directors had voted that the bank should go into liquidation, and should be closed to business, and that a receiver should be appointed; and it was made with a view, on the part of the Pacific Bank and of its cashier, who represented it and acted for it in this transfer of its assets, to prevent the application of its assets in the manner prescribed by such chapter 4 of title 62, and with a view to prefer the Security Bank to other creditors. The transaction, if allowed to stand, could result in nothing else. The statute made it void, although there was no such view on the part of the Security Bank in receiving the transfer of the assets, and although there was no knowledge or suspicion at that time on the part of the Security Bank that the Pacific Bank was insolvent or contemplated insolvency, or [232] was not doing business, or that its directors had voted to close it, or that application was to be made for a receiver; and although the transfer took place before the application was actually made to the comptroller for the appointment of a receiver.

There was no question of fact to be submitted to a jury. From the facts proved, the intent to prefer, on the part of the Pacific Bank, was a necessary conclusion; and it was correct in the district court to direct a verdict for the plaintiff. If any other verdict, on the facts proved, had been rendered, it would have been the duty of that court to set it aside.

Nor was there any error on the part of the district court in refusing to submit to the jury the second and third questions which the defendant requested the judge to submit to them. The bill of exceptions does not set forth what the "other evidence" given in the case was, in regard to any subsequent agreement between the cashiers of the two banks as to the holding of the deposit by the Security Bank. The court ruled that the issues involved in such second and third questions were immaterial; and this court cannot hold otherwise, on the facts set forth in the bill of exceptions. "Any subsequent agreement" must have been made after the receiver had been actually appointed, and could not affect his rights.

The defendant objects that the rulings of the district court were made, and the verdict and judgment were rendered generally, on the plaintiff's declaration of three counts; and that the first count, which seeks to recover back the money deposited as an unlawful payment, is inconsistent with the second count, which seeks to recover on the certificate of deposit as a valid instrument.

It is a sufficient answer to this contention to say, that no objection was made to the declaration by way of demurrer or otherwise, at the trial or before, and no ruling on the subject was asked for at the trial, or was made the subject of an exception. No objection or exception was taken to the verdict, nor did the defendant request at the trial that the plaintiff should elect on which count he would ask a verdict; nor did the defendant request the court to ask the jury to state on which count of the declaration the verdict was rendered.

We see no inconsistency between the first [233] and second counts of the declaration. They were in substance for the same cause of action; and the first count is clearly sufficient to support the verdict.

Judgment affirmed.

WILLIAM H. ROBERTSON, Collector, [233]
Plff in Err.,
v.
C. LAWRENCE PERKINS ET AL., Executors of CHARLES L. PERKINS, Deceased.

(See S. C. Reporter's ed. 233-238.)

Practice in United States Court—allegations of pleadings—when admitted—exception—duty on steel rail crop-ends.

1. Under section 914 of the Revised Statutes of the United States, the practice and pleading in a civil cause, other than an equity or admiralty cause, in the circuit court are required to conform as near as may be to the practice and pleadings in the courts of the State within which such circuit court is held.

2. In an action in such circuit court, which was held in the State of New York, allegations of the complaint not denied by the answer are to be taken as true.

3. Allegations of the complaint in this case, that the plaintiff duly made and filed protest, and duly appealed to the Secretary of the Treasury, and that the suit was brought in time, not denied in the answer, are to be taken as true. The word "duly" means, in a proper way, or regularly, or according to law.

4. Where, at the close of plaintiff's evidence, defendant moved the court to direct a verdict for the defendant, on the ground that the plaintiff had not shown facts sufficient to entitle him to recover, and the motion was denied and defendant excepted, held that, as the defendant did not then rest his case but proceeded to introduce evidence, the exception failed.

5 Bessemer steel rail crop-ends, cut off from steel

rails, come within the definition of steel, under the provision of schedule C, of section 2502 of the Revised Statutes as amended, and are liable to a duty, when imported, of 45 per cent *ad valorem*.

[No. 672.]

Argued Jan. 15, 16, 1889. Decided Jan. 28, 1889.

IN ERROR to the Circuit Court of the United States for the Southern District of New York, to review a judgment for plaintiff, for duties illegally exacted on an importation of Bessemer steel rail crop-ends, from England, in August, 1884. *Reversed.*

The facts are stated in the opinion.

Mr. **G. A. Jenks,** *Solicitor-General,* for plaintiff in error.

Mr. **J. Langdon Ward** for defendant in error.

Mr. Justice **Blatchford** delivered the opinion of the court:

This is an action originally brought in the Superior Court of the City of New York, and removed by *certiorari*, by the defendant, into the Circuit Court of the United States for the [234] Southern District of New York. It was brought by Charles L. Perkins against William H. Robertson, Collector of the Port of New York, to recover $1,460 as duties illegally exacted on an importation of Bessemer steel rail crop-ends, from England, in August, 1884. The defendant exacted duties on the articles at the rate of 45 per centum ad valorem, amounting to $2,628. The plaintiff claimed that the lawful rate of duty was only 20 per centum ad valorem, or $1,168. The complaint contained the allegation that the plaintiff "duly made and filed due and timely protest in writing against the said erroneous and illegal assessment and exaction of the said duty;" that the plaintiff was compelled to pay the $1,460 in order to obtain possession of the merchandise; that he duly appealed to the Secretary of the Treasury from the decision of the defendant ascertaining and liquidating the duties; and that ninety days had not elapsed, at the commencement of the suit, since the decision of the Secretary of the Treasury on such appeal. The answer of the defendant did not deny the allegations of the complaint as to protest and appeal and the decision of the Secretary of the Treasury. The jury found a verdict for the plaintiff. The parties consented in open court that the amount of the verdict might be adjusted at the custom house, under the direction of the court. The amount was adjusted as of the date of the verdict; and for that amount, with interest and costs, in all $1,742.23, judgment was rendered for the plaintiff. To review that judgment the defendant has brought a writ of error.

At the close of the plaintiff's evidence, the counsel for the defendant moved the court to direct a verdict for the defendant, on the grounds, among others: (1) that the protest which was put in evidence by the plaintiff was served and filed before liquidation, and was, therefore, premature; (2) that no proof was offered or given that there was any appeal to the Secretary of the Treasury, or any decision on such appeal, and no proof of the date of such decision, to show that the suit was brought in time. The motion was denied, and the defendant excepted to the ruling.

Under section 914 of the Revised Statutes of the United States, the practice, pleadings, and [235] forms and modes of proceeding in this case, in regard to the complaint and the answer, were required to conform, as near as may be, to the practice, pleadings, and forms and modes of proceeding existing at the time in like causes in the courts of record of the State of New York. By section 481 of the New York Code of Civil Procedure, it is required that the complaint shall contain "a plain and concise statement of the facts constituting each cause of action." Section 500 requires that the answer shall contain "a general or specific denial of each material allegation of the complaint controverted by the defendant, or of any knowledge or information thereof sufficient to form a belief." By section 522, "Each material allegation of the complaint, not controverted by the answer," "must, for the purposes of the action, be taken as true."

The allegation of the complaint in this case is, that the plaintiff "duly made and filed due and timely protest in writing," and "duly appealed to the Secretary of the Treasury," and "that ninety days have not elapsed since the decision of the Secretary of the Treasury on the aforesaid appeal." As none of these allegations were denied in the manner required by section 500 of the Code, they were, by section 522, to be taken as true; and no issue was joined upon any one of them. This is the ruling in regard to these provisions by the Court of Appeals of the State of New York. In *Lorillard* v. *Clyde*, 86 N. Y. 384, the complaint alleged that, in pursuance of a certain agreement, a corporation "was duly organized under the laws of this State," It was contended, on a demurrer to the complaint, that the agreement was illegal, because it provided that the parties thereto, consisting of five persons only, should form a corporation, whereas the statute contemplated that at least seven persons should unite in order to form a corporation. But the court held that the allegation that a corporation was "duly organized under the laws of this State," pursuant to the agreement, imported that the requisite number of persons united for that purpose; that it must be assumed that the corporation was regularly organized; and that it was unnecessary for the plaintiff to show in his complaint the precise steps taken to accomplish that [236] result. The word "duly" means, in a proper way, or regularly, or according to law. See also *Tuttle* v. *People*, 36 N. Y. 431, 436, and cases there cited; *Fryatt* v. *Lindo*, 3 Edw. Ch. 289; *People* v. *Walker*, 23 Barb. 304; *People* v. *New York*, 28 Barb. 240; *Burns* v. *People*, 59 Barb. 581; *Gibson* v. *People*, 5 Hun, 542.

The plaintiff claimed, by his protest and at the trial, that the articles in question were liable to a duty of only 20 per centum ad valorem, under the provision of schedule C of section 2502 of the Revised Statutes, as amended by section 6 of the Act of March 3, 1883, chap. 121 (22 Stat. at L. 501), which imposes a duty of 20 per centum ad valorem on "mineral substances in a crude state and metals unwrought, not specially enumerated or provided for in this Act." The collector had imposed a duty of 45 per centum ad valorem on the articles, under the following provision of the same schedule C (22 Stat. at L. 500): "Steel, not specially enumerated or provided for in this Act, forty-five per centum ad

valorem: *Provided*, That all metal produced from iron or its ores, which is cast and malleable, of whatever description or form, without regard to the percentage of carbon contained therein, whether produced by cementation, or converted, cast, or made from iron or its ores, by the crucible, Bessemer, pneumatic, Thomas-Gilchrist, basic, Siemens-Martin, or open-hearth process, or by the equivalent of either, or by the combination of two or more of the processes, or their equivalents, or by any fusion or other process which produces from iron or its ores a metal either granular or fibrous in structure, which is cast and malleable, excepting what is known as malleable iron castings, shall be classed and denominated as steel."

At the close of the plaintiff's evidence, the defendant moved the court to direct a verdict for the defendant, on the further ground that the plaintiff had not shown facts sufficient to entitle him to recover. The motion was denied by the court, and the defendant excepted to the ruling. But, as the defendant did not then rest his case, but afterwards proceeded to introduce evidence, the exception fails. *Accident Ins. Co.* v. *Crandal*, 120 U. S. 527 [30: 740].

[237] The plaintiff introduced evidence for the purpose of showing that the article in question fell under the denomination of "metal unwrought," not specially enumerated or provided for in the Act; and the defendant introduced evidence to show the contrary. It appeared by the evidence of the plaintiff, that the crop-end of a Bessemer steel rail, such as the article in question, was the imperfect end of a rail, which was cut off to bring the remainder down to a solid rail of regular length; that the end thus cut off was of the same texture and fabric with the rail which remained after such end was cut off, and was made in the same manner; and that the crop-end so cut off was Bessemer steel. It also appeared that such ends, when imported, were sold as an article of merchandise in this country, and were sometimes remelted in furnaces; and that they were sometimes used, after importation, for manufacturing other articles by reheating them, without their being remelted, and had a value as a manufactured article, other than for the purpose of remelting.

At the close of the testimony on both sides the defendant moved the court to direct a verdict for him, on the grounds that the plaintiff had not produced sufficient evidence to make a case; that there was no evidence that the imported articles were unwrought metal; and that they were steel, which was specially provided for in the statute. The motion was denied by the court, and the defendant excepted to the ruling.

The court charged the jury that the only question was whether the article was wrought or unwrought metal; that the word "wrought" meant wrought into something suitable for use, and not merely wrought in some manner, by being manufactured or treated; that, if the article was a mere excess of material, left after the making of steel rails, it was not wrought metal, within the sense of the statute; that, if it was something left over in excess of the material, the jury were to return a verdict for the plaintiff; but, if it was an article fit for use in itself, made at the same time with the making of the rail, they should return a verdict for the defendant. The defendant excepted to that part of the charge which stated that the only question for the jury was whether the article was wrought or unwrought metal; and also to [238] that part which stated that if the article was a mere excess of material in making steel rails, it was not wrought metal in the sense of the statute.

We are of opinion that the court erred in its disposition of the case, and its charge to the jury. The motion to direct a verdict for the defendant, on the ground that the article was not metal unwrought, not specially enumerated or provided for in the statute, but was steel, specially enumerated and provided for in the same statute, in a clause other than that regarding metals unwrought, ought to have been granted. The article fell within the definition of steel, given in the statute. The testimony showed that it was metal produced from iron or its ores; by the Bessemer process, within the definition of the articles which the statute stated should "be classed and denominated as steel." It was none the less steel because it was an excess of material, as the result of making steel rails, cut off from the steel rail, and not suitable for use in itself, without being remelted or reheated. The charge of the court on this subject was subject to the exception and objection made to it.

It results from these views, that the judgment below must be reversed, and the case be remanded to the Circuit Court with a direction to grant a new trial.

FRANK ELY, *Appt.*, [291]
v.
THE NEW MEXICO AND ARIZONA RAILROAD COMPANY ET AL.

(See S. C. Reporter's ed. 291-294.)

Arizona Statute—action to quiet title—complaint.

1. Under the Statutes of Arizona, both legal and equitable relief may be granted in the same action and may be administered through the intervention of a jury or by the court itself, according to the nature of the remedy sought.
2. By the Act of the Territory of 1881, chap. 59, any person owning real property, whether in possession or not, in which any other person claims an adverse title or interest, may bring an action against him to determine the adverse claim and to quiet the plaintiff's title.
3. An allegation in the complaint, in ordinary and concise terms, of the ultimate facts that the plaintiff is the owner in fee, is sufficient, without setting out matters of evidence, and an allegation that the defendant claims an adverse estate or interest is sufficient, without further defining it, to authorize the court to grant equitable relief.

[No. 1133.]

Submitted Jan. 14, 1889. Decided Jan. 28, 1889.

APPEAL from a judgment of the Supreme Court of the Territory of Arizona, sustaining a demurrer to the complaint, and dismissing an action to enjoin defendants from asserting any claim, adverse to plaintiff, to the lands in question. *Reversed.*

Statement by *Mr. Justice* **Gray**:

This was a complaint, filed in a District

Court of the Territory of Arizona and County of Pima, by Frank Ely against the New Mexico and Arizona Railroad Company and several individuals, alleging that the "plaintiff is the owner in fee of all that piece or parcel of land granted by the Mexican authorities to Leon Herreros on May 15, 1825," called the Rancho San José de Sonoita, situated in the Sonoita Valley in the county aforesaid, and more particularly described and bounded in the complaint, according to the calls of a survey made by the Government of Spain in June, 1821; and that the "defendants, and each of them, claim an estate or interest in and to the above described land and premises adverse to this plaintiff; that the said claim of the said defendants and each of them is without any right whatsoever; and the said defendants have not, nor have any or either of them any estate, right, title or interest whatever in said lands and premises or any part thereof. Wherefore, the plaintiff prays:

"1. That the defendants, and each of them, be required to set forth the nature of his claim, and that all adverse claims of the defendants, and of each of them, may be determined by decree of this court.

"2. That by said decree it be declared and adjudged that the defendants have no estate or interest whatever in or to said land or premises, or in or to any part thereof, and that the title of the plaintiff is good and valid.

[292] "3. That the defendants, and each of them, be forever enjoined and debarred from asserting any claim whatever in or to said land or premises, or to any part thereof, adverse to the plaintiff, and for such other and further relief as to this honorable court shall seem meet and agreeable to equity, and for his costs of suit."

The defendants demurred to the complaint, upon the ground it did not state facts sufficient to constitute a cause of action. The demurrer was sustained, and judgment given for the defendants, dismissing the action. The judgment was affirmed in the Supreme Court of the Territory. 19 Pacific Reporter, 6. The plaintiff appealed to this court.

Mr. **Rochester Ford,** for appellant:

The complaint states facts sufficient to constitute a cause of action.

More v. *Steinbach*, 127 U. S. 70 (32: 51); *People* v. *Center*, 66 Cal. 551; *Statham* v. *Dusy* (Cal.) 11 Pac. Rep. 606; *Pierce* v. *Felter*, 53 Cal. 18; *Hyde* v. *Redding*, 74 Cal. 493; *Fritz* v. *Grosnicklaus*, 20 Neb. 413; *Holland* v. *Challen*, 110 U. S. 15 (28: 52); *Frost* v. *Spitley*, 121 U. S. 552 (30: 1010); *Jeffersonville, M. & I. R. Co.* v. *Oyler*, 60 Ind. 383; *Marot* v. *Germania Building & Sav. Asso.* 54 Ind. 37; *Trittipo* v. *Morgan*, 99 Ind. 269; *Johnson* v. *Taylor*, 3 West. Rep. 711; *Reynolds* v. *Crawfordsville First Nat. Bank*, 112 U. S. 405 (28: 733).

Messrs. **B. H. Hereford** and **Thomas Mitchell** for appellees.

Mr. Justice **Gray** delivered the opinion of the court:

The judgment of the Supreme Court of the Territory of Arizona in favor of the defendants, upon their demurrer to the complaint, proceeded upon the ground that the action must be treated as a suit in equity only, and that the complaint made out no case for equitable relief, and therefore could not be be maintained under the opinions of this court in *Holland* v. *Challen*, 110 U. S. 15, 25 [28: 52, 56], and *Frost* v. *Spitley*, 121 U. S. 552, 557 [30: 1010, 1012]. See also *More* v. *Steinbach*, 127 U. S. 70 [32: 51]. But each of those cases came from a Circuit Court of the United States, in which the distinction between actions at law and suits in equity is preserved. The present action, arising under territorial statutes, is governed by different considerations.

The Statutes of Arizona provide that "There shall be in this Territory but one form of civil action for the enforcement or protection of private rights and the redress or prevention of private wrongs," to be commenced by complaint, containing "a statement of the facts constituting the cause of action, in ordinary and concise language," and "a demand of the relief which the plaintiff claims." Compiled [293] Laws of 1877, chap. 48, §§ 1, 22, 89. Under precisely similar statutes of the Territory of Montana, it has been adjudged by this court that both legal and equitable relief may be granted in the same action, and may be administered through the intervention of a jury or by the court itself, according to the nature of the remedy sought. *Hornbuckle* v. *Toombs*, 85 U. S. 18 Wall. 648 [21: 966]; *Hershfield* v. *Griffith*, 85 U. S. 18 Wall. 657 [21: 968]; *Davis* v. *Bileland*, 85 U. S. 18 Wall. 659 [21: 969]; *Basey* v. *Gallagher*, 87 U. S. 20 Wall. 670 [22: 452].

By the Compiled Laws of Arizona, chap. 48, § 256, "An action may be brought by any person in possession by himself or his tenant of real property against any person who claims an estate or interest therein adverse to him, for the purpose of determining such adverse claim, estate or interest."

By the Act of the Territory of 1881, chap. 59, that statute is amended by striking out the requirement of the plaintiff's possession, so as to read as follows: "An action may be brought by any person against another who claims an estate or interest in said real property adverse to him, for the purpose of determining such adverse claim."

The manifest intent of the statute, as thus amended, is, that any person owning real property, whether in possession or not, in which any other person claims an adverse title or interest, may bring an action against him to determine the adverse claim and to quiet the plaintiff's title. It extends to cases in which the plaintiff is out of possession and the defendant is in possession, and in which, at common law, the plaintiff might have maintained ejectment. An allegation, in ordinary and concise terms, of the ultimate fact, that the plaintiff is the owner in fee, is sufficient, without setting out matters of evidence, or what have been sometimes called probative facts, which go to establish that ultimate fact; and an allegation that the defendant claims an adverse estate or interest is sufficient, without further defining it, to put him to a disclaimer, or to allegation and proof of the estate or interest which he claims, the nature of which must be known to him, and may not be known to the plaintiff.

These conclusions accord with the decisions of the Courts of California and Indiana under [294]

similar statutes, from one of which the present Statute of Arizona would seem to have been taken. *Payne* v. *Treadwell*, 16 Cal. 220, 242-247; *Statham* v. *Dusy*, 11 Pac. Rep. 606; *Heeser* v. *Miller* 19 Pac. Rep. 875; *Jeffersonville, M. & I. R. Co.* v. *Oyler*, 60 Ind. 388, 392; *Trittipo* v. *Morgan*, 99 Ind. 269.

The result is, that the complaint in this case is sufficient to authorize the court to determine the claim of the defendants and the title of the plaintiff, and also, if the facts proved at the hearing shall justify it, to grant an injunction or other equitable relief.

Judgment reversed, and case remanded to the Supreme Court of Arizona, with directions to overrule the demurrer to the complaint, and to take such further proceedings as may be consistent with this opinion.

---

[315]

JOSIAH MORRIS, *Appt.*,
v.
JAMES N. GILMER.

(See S. C. Reporter's ed. 315-329.)

Jurisdiction of circuit court—duty to dismiss—depositions—change of domicil for the purpose of suit—change of citizenship—what constitutes—evidence—duty of court.

1. Whether the circuit court has or has not jurisdiction of the case is a question which this court must examine and determine, even if the parties forbear to make it, or consent that the case be considered on its merits.

2. It is the duty of the circuit court to dismiss a suit, if it appears at any time after it is brought, and before it is finally disposed of, that it does not involve a controversy of which it may take cognizance.

3. Such fact may be brought to the attention of the court by affidavits or depositions taken in the cause, and it is not necessary that the want of jurisdiction should appear from the record.

4. A citizen of the United States can instantly transfer his citizenship from one State to another, and his right to sue in the Courts of the United States is none the less because his change of domicil was induced by the purpose, whether avowed or not, of invoking, for the protection of his rights, the jurisdiction of a federal court.

5. In order to effect such a change of domicil as constitutes a change of citizenship, there must be actual residence in the place, with the intention that it is to be a principal and permanent residence.

6. Upon the evidence in this case, *held*, that the plaintiff had no purpose to acquire a domicil or settled home in Tennessee, and that his sole object in removing to that State was to place himself in a situation to invoke the jurisdiction of the Circuit Court of the United States, with the intention to leave that State as soon as he could do so without defeating the jurisdiction of the federal court, and that he was, therefore, a mere sojourner in the State when the suit was brought.

7. If the removal be for the purpose of committing a fraud upon the law, and to enable the party to avail himself of the jurisdiction of the federal courts, and that fact be made out by his acts, the court must pronounce that his removal was not with a *bona fide* intention of changing his domicil, however frequent and public his declarations to the contrary may have been.

[No. 1150.]

Submitted Jan. 2, 1889. Decided Jan. 28, 1889.

APPEAL from a decree of the Circuit Court of the United States for the Middle District of Alabama, in favor of plaintiff in an action to require defendant to account for and pay over dividends and to transfer shares of stock to the plaintiff. *Reversed*.

Reported below, 35 Fed. Rep. 682.

The facts are stated in the opinion.

Messrs. **Henry C. Tompkins, Alexander T. London, Samuel F. Rice** and **Daniel S. Troy**, for appellant:

This suit is not one of which the circuit court should have retained jurisdiction; appellee at the time of the filing of the bill, was not in reality a citizen of Tennessee. This objection may be taken at any time, even though no plea be filed.

Barney v. *Baltimore*, 73 U. S. 6 Wall. 280 (18: 825); *Williams* v. *Nottawa*, 104 U.S. 209 (26:719); *Hawes* v. *Oakland*, 104 U.S. 450 (26:827; *Hayden* v. *Manning*, 106 U. S. 586 (27:306); *Manhattan Life Ins. Co.* v. *Broughton*, 109 U.S. 121 (27:878); *Farmington* v. *Pillsbury*, 114 U. S. 138 (29:114); *Robinson* v. *Anderson*, 121 U. S. 522 (30:1021); *Detroit* v. *Dean*, 106 U. S. 537 (27: 300).

There can be no new domicil acquired, in any event, until there is an absolute abandonment of the old one.

De Bonneval v. *De Bonneval*, 1 Curteis, Eccl. 856; *Somerville* v. *Somerville*, 5 Ves. Jr. 750; *White* v. *Brown*, 1 Wall. Jr. 262; *Ennis* v. *Smith*, 55 U. S. 14 How. 400 (14: 472).

In order to consitute a domicil in another State it is necessary that the party removing must have the intention, at the time of or after the removal, to remain permanently or for an indefinite period in the State to which he has removed.

Gardner v. *Sharp*, 4 Wash. C.C. 609; *Mitchell* v. *U. S.* 88 U. S. 21 Wall. 350 (22: 584); *Case* v. *Clarke*, 5 Mason, 70; *Cooper* v. *Galbraith*, 3 Wash. C. C. 546.

The rule is also well established that the native domicil, or domicil of origin, easily reverts.

Guier v. *O'Daniel*, 1 Am. Lead. Cas. 745, 4th ed.; *Craigie* v. *Lewin*, 3 Curt. Eccl. 435; *The Venus*, 12 U. S. 8 Cranch, 253 (3: 553); *State* v. *Hallett*, 8 Ala. 159; *Merrill* v. *Morrissett*, 76 Ala. 433.

If the bill is dismissed generally, it is conclusive on the parties; and unless words of qualification accompany the decree, it is to be presumed to be rendered on the merits.

Freeman, Judgm. § 270; *Durant* v. *Essex Co.* 74 U. S. 7 Wall. 109 (19: 156); *Case* v. *Beauregard*, 101 U. S. 692 (25:1005); *Alley* v. *Nott*, 111 U. S. 472 (28: 491); *Lyon* v. *Perin & G. Mfg. Co.* 125 U. S. 698 (31: 839); *Bigelow* v. *Winsor*, 1 Gray, 299; *Tankersly* v. *Pettis*, 71 Ala. 179; *Borrowscale* v. *Tuttle*, 5 Allen, 377.

In a court of equity there is always an issue on staleness, lapse of time and laches, whether they are pleaded or made matter of defense by way of demurrer; and it is incumbent upon the complainant, when he asks relief after the lapse of much time, to explain the delay.

Speidel v. *Henrici*, 120 U. S. 387 (30: 719); *Piatt* v. *Vattier*, 34 U. S. 9 Pet. 405 (9: 178); *McKnight* v. *Taylor*, 42 U.S. 1 How. 161 (11:86); *Bowman* v. *Wathen*, 42 U. S. 1 How. 189 (11: 97); *Wagner* v. *Baird*, 48 U. S. 7 How. 234 (12: 681); *Badger* v. *Badger*, 69 U. S. 2 Wall. 87 (17: 836); *Hume* v. *Beale*, 84 U. S. 17 Wall. 336 (21: 602); *Marsh* v. *Whitmore*, 88 U. S. 21 Wall. 178 (22: 482); *Sullivan* v. *Portland & K. R. Co.* 94 U. S. 806 (24: 324); *Godden* v. *Kimmell*, 99 U. S. 201 (25: 431); *Johnson* v. *Johnson*, 5 Ala. 90; *James* v. *James*, 55 Ala. 583; *Nettles* v. *Nettles*, 67 Ala.

601; *Gilmer* v. *Morris*, 80 Ala. 78; *Hayward* v. *Eliot Nat. Bank*, 96 U. S. 617 (24: 857); *Richards* v. *Mackall*, 124 U. S. 187 (31: 399).

The former decree is conclusive here on appellee.

Beloit v. *Morgan*, 74 U.S. 7 Wall. 622 (19:206); *Aurora* v. *West*, 74 U. S. 7 Wall. 102 (19: 49); *Cromwell* v. *Sac County*, 94 U. S. 358 (24: 199); *Case* v. *Beauregard*, 101 U.S. 688 (25:1004); *New York L. Ins. Co.* v. *Bangs*, 103 U. S. 780 (26: 608); *Louis* v. *Brown Twp.* 109 U. S. 162 (27: 892); *Bissell* v. *Spring Valley Twp.* 124 U. S. 225 (31: 411); *Benjamin* v. *Elmira etc. R. Co.* 49 Barb. 441; *Griffin* v. *Long Island R. Co.* 3 Cent. Rep. 740, 102 N. Y. 452.

A judgment decides every matter which pertains to the cause of action.

Fischli v. *Fischli*, 1 Blackf. 360; *Bates* v. *Spooner*, 45 Ind. 489; *Ulrich* v. *Drischell*, 88 Ind. 358; *Ballard* v. *Franklin L. Ins. Co.* 81 Ind. 239; *Kelly* v. *Donlin*, 70 Ill. 378; *Ruegger* v. *Indianapolis & St. L. R. Co.* 103 Ill. 449; *Hamilton Quimby*, 46 Ill. 90; *Shenandoah Valley R. Co.* v. *Griffith*, 76 Va. 913, 925; *Petersine* v. *Thomas*, 28 Ohio St. 596; *Mally* v. *Mally*, 52 Iowa, 654-55; *Thompson* v. *Myrick*, 24 Minn. 4; *Preble* v. *Portage Co.* 8 Biss. 358, 361; *Hanna* v. *Scott*, 84 Ind. 71; *State* v. *Krug*, 94 Ind. 366; *Elwood* v. *Beymer*, 100 Ind. 504; *Bennitt* v. *Wilmington Star Min. Co.* 119 Ill. 9, 6 West. Rep. 40; *Chamberlain* v. *Gaillaird*, 26 Ala. 509; *Waring* v. *Lewis*, 53 Ala. 623; *Tankersly* v. *Pettis*, 71 Ala. 179.

If the appellee had the right to redeem, that right was an indivisible one.

3 Jones, Mort. §§ 1072-1080; 1 Herman, Estop. §§ 218, 223; *Baird* v. *U. S.* 96 U. S. 430 (24: 703); *Goodenow* v. *Litchfield*, 59 Iowa, 226; *Oliver* v. *Holt*, 11 Ala. 574; *Lee* v. *Tannenbaum*, 62 Ala. 501; *Grigg* v. *Banks*, 59 Ala. 311-317; *Lehman* v. *Collins*, 69 Ala. 127.

We refer to the following additional authorities on the effect of the former judgment:

Parrish v. *Ferris*, 67 U. S. 2 Black, 606, 610 (17: 317, 319); *Nichol* v. *Levy*, 72 U. S. 5 Wall. 433 (18: 596); *Goodrich* v. *Chicago*, 72 U. S. 5 Wall. 566 (18: 511); *Mason Lumber Co.* v. *Buckel*, 101 U. S. 638 (25: 1074); *N. Y. L. Ins. Co.* v. *Bangs*, 103 U. S. 780 (26: 608); *Louis* v. *Brown Twp.* 109 U. S. 162 (27: 892); 1 Herman, Estop. §§ 119, 122-125; *Dewey* v. *Peck*, 38 Iowa, 242; *Greenup* v. *Crooks*, 50 Ind. 410, 419; *Betts* v. *Starr*, 5 Conn. 550, 553.

The declarations made by the appellant to Colonel Troy, as to how he held and claimed the stock in 1875, when levied on by Farley, are admissible as a part of the *res gestæ*.

Abney v. *Kingsland*, 10 Ala. 355; *Glaze* v. *Blake*, 56 Ala. 379; *Daffron* v. *Crump*, 69 Ala. 77; cases cited in 1 Brick. Dig. 843, § 558.

And this being the settled rule of evidence in civil cases in the state courts is binding on the federal courts.

Wilcox v. *Hunt*, 38 U. S. 13 Pet. 378 (10: 209); *Vance* v. *Campbell*, 66 U. S. 1 Black, 427 (17: 168); *Wright* v. *Bales*, 67 U. S. 2 Black, 535 (17: 264); *Ryan* v. *Bindley*, 68 U. S. 1 Wall. 66 (17: 559).

Appellee having failed to make any demand within a reasonable time after the transfer to appellant in 1875 and after the sale by him in 1881, cannot excuse his laches and is barred.

Mardis v. *Shackleford*, 4 Ala. 493; *Kimbro* v. *Waller*, 21 Ala. 376; *Pittsburgh & C. R. Co.* v. *Byers*, 32 Pa. 22; *Battley* v. *Faulkner*, 3 Barn. & Ald. 288; *Brashier* v. *Gratz*, 19 U. S. 6 Wheat. 528, 541 (5: 322); *Hayward* v. *Eliot Nat. Bank*, 96 U. S. 611 (24: 855); *Davison* v. *Davis*, 125 U. S. 90 (31: 635).

The Statute of Limitations runs against the debtor under such a contract.

Livingston v. *Arrington*, 28 Ala. 424; *Bennett* v. *Bennett*, 34 Ala. 53; *Nolen* v. *Palmer*, 24 Ala. 391; *Rawls* v. *Kennedy*, 23 Ala. 240, 251; *Strickland* v. *Nance*, 19 Ala. 233, 236; 27 Am. Dec. note, 631-635.

Messrs. **W. A. Gunter** and **H. C. Semple**, for appellee:

A citizen of the United States can instantly transfer his citizenship from one State to another by commensurate acts and purposes; and it makes not the slightest difference that the purpose of the change of domicil was to seek the independent judgment of a federal court.

Briggs v. *French*, 2 Sumn. 251; *Manhattan L. Ins. Co.* v. *Broughton*, 109 U. S. 125-6 (27: 880); *Jones* v. *League*, 59 U. S. 18 How. 76 (15: 263); *Cooper* v. *Galbraith*, 3 Wash. C.C. 546; *Castor* v. *Mitchel*, 4 Wash. C. C. 191; *Case* v. *Clarke*, 5 Mason, 70; *Rice* v. *Houston*, 80 U. S. 13 Wall. 66 (20: 484); *Gardner* v. *Sharp*, 4 Wash. C. C. 609; *Butler* v. *Farnsworth*, Id. 101; *Read* v. *Bertrand*, Id. 514; *Shelton* v. *Tiffin*, 47 U. S. 6 How. 163 (12: 387); Desty, Fed. Proc. § 629a, p. 151; Id. 146.

If the plaintiff fails on demurrer in the first action, from the omission of an essential allegation in his declaration, which is fully supplied in the second suit, the judgment in the first suit is no bar to the second, although the respective actions were instituted to enfore the same right.

Gould v. *Evansville & C. R. Co.* 91 U. S. 533 (23: 418); *Gilman* v. *Rives*, 35 U. S. 10 Pet. 302 (9: 432); *Wells* v. *Moore*, 49 Mo. 230; *Moore* v. *Dunn*, 41 Ohio St. 62; *Aurora* v. *West*, 74 U. S. 7 Wall. 99 (19: 48); *Los Angeles* v. *Mellus*, 59 Cal. 444; *Detrick* v. *Sharrar*, 95 Pa. 521; *Pritchard* v. *Woodruff*, 36 Ark. 196; *Lockett* v. *Lindsay*, 1 Idaho, N. S. 324; *Chrisman* v. *Harman*, 29 Gratt. 494; *Fowlkes* v. *State*, 14 Lea, 14; *Terry* v. *Hammonds*, 47 Cal. 35; *Morrell* v. *Morgan*, 65 Cal. 576; *Gerrish* v. *Pratt*, 6 Minn. 61; *Bonnifield* v. *Price*, 1 Wy. Ter. 223; *Gist* v. *Davis*, 2 Hill, Ch. 335, 29 Am. Dec. 91; *Lampen* v. *Kedgewin*, 1 Mod. 207; *Birch* v. *Funk*, 2 Met. (Ky.) 547; Gould, Pl. 478, §§ 44-46; 1 Chit. Pl. 198; Freeman, Judgm. § 267.

Morris is estopped in law and equity to deny the title of his bailor.

Cook, Law of Stockholders, §§ 457, 467; *Markham* v. *Jaudon*, 41 N. Y. 235; *Baker* v. *Drake*, 66 N. Y. 518.

The transfer of stock, on the books of the corporation, to a creditor, as security for a debt, is a pledge, and not a mortgage.

Nabring v. *Bank of Mobile*, 58 Ala. 204; Jones, Pledges, §§ 9, 151-153; Schouler, Bailm. §§ 167, 168, 194.

Mr. Justice **Harlan** delivered the opinion of the court: [316]

The first assignment of error relates to the action of the circuit court in overruling a motion to dismiss this suit, as one not really and substantially involving a dispute or controversy properly within its jurisdiction.

On the 7th of July, 1884, the present appellee, James N. Gilmer, who was then, and during all his previous life had been, a citizen of Alabama, instituted a suit in equity, in one of the chancery courts of that State, against Josiah Morris, individually, and against Josiah Morris and F. M. Billing as composing the firm of Josiah Morris & Co., citizens of Alabama. Its object was to obtain a decree declaring that the transfer, by the plaintiff to Morris, of sixty shares of the capital stock of the Elyton Land Company, an Alabama corporation, was made in trust and as collateral security for the payment of a debt due from the plaintiff to Josiah Morris & Co.; ordering an accounting in respect to the amount of that debt, the value of the stock, and the dividends thereon received by Morris; and directing him upon the payment of the debt and interest, or so much thereof as appeared to be unpaid, to transfer sixty shares of the stock to the plaintiff, and pay over any dividends received in excess of the debt due from the latter.

Besides putting in issue all the material averments of the bill, the answer relied upon laches and the Statute of Limitations in bar of the suit. The cause went to a hearing, upon pleadings and proofs, and, on the 29th of April, 1885, a final decree was rendered dismissing the suit — the chancery court holding that the claim was barred by the Statute of Limitations. Upon appeal, the decree was affirmed by the Supreme Court of Alabama on the 27th of January, 1886. That court, as appears from the opinion of its Chief Justice, refused to modify the decree, so as to make it a dismissal without prejudice to another suit. *Gilmer* v. *Morris*, 80 Ala. 78.

[317] The present suit was instituted September 20, 1886, in the Circuit Court of the United States by Gilmer, claiming to be a citizen of Tennessee, against Morris and Billing. It relates to the same shares of stock; and the relief asked is that Morris be decreed to account for and pay over to the plaintiff all dividends paid after it came to the defendant's hands (after deducting Gilmer's indebtedness to Morris or to Morris & Co.) and to transfer the sixty shares of stock to the plaintiff. The defendants filed a plea setting up the final decree in the state court in bar of the present suit. That plea having been overruled (*Gilmer* v. *Morris*, 30 Fed. Rep. 476), they separately answered—Billing disclaiming any interest in the stock, or in the dividends thereon. The plaintiff filed a replication. Subsequently, December 16, 1887, the defendant Morris filed in the cause the affidavit of A. S. Gerald to the effect that, in a conversation held by him with the plaintiff on or about November 11, 1887, the latter informed him "that he had returned to the City of Montgomery to reside permanently, and had been living here with that intent some time previous to said conversation;" and also his own affidavit to the effect that he had been informed and believed that the plaintiff returned to the City of Montgomery "some time in the latter part of May or early part of June, 1887, with the purpose and intent of permanently residing in the State of Alabama, and has continuously resided in said State of Alabama ever since said time." On the 17th of November, 1887, before the final hearing of the cause, the defendants, with leave of court, filed a written motion for the dismissal of the suit upon the ground that it did not really and substantially involve a controversy within the jurisdiction of the circuit court; basing his motion upon the above affidavits of Gerald and Morris, and upon the depositions of the plaintiff, and of his father, F. M. Gilmer, taken in this cause in behalf of the plaintiff. The father, in his deposition taken *de bene esse*, October 27, 1886, makes the following statements on cross examination:

"*Q.* Where does your son, J. N. Gilmer, now reside? *A.* He resides in Memphis, Tennessee.

"*Q.* When did he remove there? *A.* I think he removed in April or May.

"*Q.* Of this year? *A.* Yes, sir, of this [318] year.

"*Q.* Did he take his family with him? *A.* He did.

"*Q.* Did he take his furniture with him? *A.* He did.

"*Q.* Is not his home at present furnished with the same furniture and pictures that were in it when he was there? *A.* No, sir.

"*Q.* Does any one occupy his house? *A.* Yes, sir.

"*Q.* Who? *A.* Mr. Mitchell.

"*Q.* How long has he occupied it? *A.* I think he occupied it on the first of the month; it was rented to him the month before.

"*Q.* You think he occupied it from the first of October? *A.* Yes, sir.

"*Q.* I ask you if up to the first of October his furniture and effects were not in the house? *A.* No, sir; his effects went with him.

"*Q.* Did he remove all his furniture? *A.* Yes, sir.

"*Q.* Were not pictures left hanging on the wall of the house? *A.* No, sir.

"*Q.* Did he not move to the State of Tennessee for the purpose of bringing this suit in the United States Court, and did he not so view it before he left? *A.* That is a question that he only can answer. I cannot answer for him.

"*Q.* I ask you if he did not tell you that his purpose in moving to Tennessee was for the purpose of bringing this suit in the United States Court? *A.* He did not tell me that.

"*Q.* I ask you if you do not know that it was his purpose, and if it was not done under advice? *A.* I can tell you what I believe, but I cannot tell you what I know about it. I do not know it.

"*Q.* You say that you do not know whether that was his purpose or whether he was ever so advised? *A.* Well, I can say I advised him to do that.

"*Q.* Well, before his removal? *A.* Yes, sir.

"*Q.* How long before he removed was it that you advised him? *A.* Well, it was some months.

"*Q.* When did you advise him? Was it after the decision of the Supreme Court of Alabama in the chancery suit that you have spoken of? *A.* Yes, sir, it was after that.

"*Q.* I ask you if you didn't advise him to [319] move for the purpose of bringing this suit in the United States Court? *A.* I did.

"*Q.* And he changed his residence after that advice? *A.* I can say, further, that it was not the only thing that induced me to advise him.

I wanted him relieved from his military occupation. I did not think that he would ever succeed in business as long as he was hanging on to a military organization, and I thought that his wife's mother lived in Memphis, and the family there were very desirous that they should go there. That was really the primary cause of my advising him, and I then suggested to him, 'If you go there you will then have an opportunity of instituting suit' (in U. S. Court). The prime object was to get him rid of all military organizations.

Q. But part of the purpose was to get him so that he could institute suit in the United States Court? *A.* Well, it was incidental. The primary purpose with me was to get him square out of the military organization.

"*Q.* Don't you know that he said his purpose in moving to Tennessee was to bring this suit in the United States Court? *A.* I do not know that he said that. I may have heard him, but I cannot now bring it to mind.

Q. Don't you know that it was his purpose to return here at the termination of this suit; don't you know this? *A.* I do not.

"*Q.* Do you know that he has moved to Tennessee permanently, or with a view of remaining there? *A.* I do not.

"*Q.* Has he gone into any business in Tennessee? *A.* He has.

Q. What is his business? *A.* Cotton-ginning business.

Q. On his own account? *A.* No, sir; in connection with others.

"*Q.* Is he proprietor or employé? *A.* I really do not know.

"*Q.* Do you know whether he has made any investment in Tennessee? *A.* I do not.

"*Q.* Have his business connections here been severed? *A.* Yes, sir.

"*Q.* Entirely? *A.* Yes, sir; entirely.

"*Q.* How long before this present suit begun [320] did he move to Tennessee? *A.* I do not know when this suit was instituted, exactly; but I suppose about four or five months.

"*Q.* What month did he move away in; do you know? *A.* I do not bear in mind the exact date; I think it was in April.

"*Q.* Of this year? *A.* Yes, sir.

"*Q.* When did you say that your intimacy with Mr. Morris ceased? *A.* At the institution of this suit of J. N. Gilmer in the chancery court. . . .

"*Q.* That suit was commenced in the Chancery Court of Alabama by Gilmer, the same plaintiff, with Morris, the same defendant, and prosecuted through the chancery court, and then went to the supreme court on appeal, did it not? *A.* It did.

"*Q.* And you were examined as a witness? *A.* I was.

"*Q.* Is not this a continuation of that same controversy—that suit? *A.* It is a continuation of the merits of the same transaction, but it is a new controversy.

"*Q.* How old are you, Mr. Gilmer? *A.* I am seventy-six years old."

Redirect examination:

"*Q.* Do you know whether J. N. Gilmer sold his residence before he left? *A.* He did.

"*Q.* Did he sell any other property—did he sell his cows and horses? *A.* He sold everything, sir, that he didn't carry with him.

"*Q.* Before he went to Memphis? *A.* Yes, sir."

The plaintiff, in his deposition, taken April 26, 1887, made these statements on cross examination:

"*Q.* Where do you reside now? *A.* In Memphis.

"*Q.* What State? *A.* The State of Tennessee.

"*Q.* How long have you resided there? *A.* One year.

"*Q.* Did you not go there, Mr. Gilmer, for the purpose of getting jurisdiction to the federal court of this State? *A.* I did, sir.

"*Q.* Is it your purpose to return to Montgomery if you gain this suit? *A.* That depends altogether upon circumstances.

"*Q.* What circumstances? *A.* If inducements be offered to make it to my interest I may.

"*Q.* Well, is there not expectation that such [321] inducements will be offered? *A.* I have had inducements offered, but I have not accepted.

"*Q.* I repeat the question: Is it not your expectation, that in the event you gain this suit, such inducements will be offered you to return here that you will accept them? *A.* Yes, sir.

"*Q.* So that you think, if you gain this suit, you will come back to Montgomery to live? *A.* Yes, sir.

"*Q.* Were you born and raised here in Montgomery? *A.* I was.

"*Q.* And lived here until May, 1885, or June, was it? *A.* I left here on the first day of May, 1886.

"*Q.* That was after the suit in the State Chancery Court had been decided against you in the Supreme Court of Alabama? *A.* Yes, sir."

Upon consideration of said affidavits and depositions, and after argument by counsel for the respective parties, the motion to dismiss was denied. The cause subsequently went to a final decree giving the plaintiff the relief asked. *Gilmer* v. *Morris*, 35 Fed. Rep. 682.

It is unnecessary to decide whether the circuit court erred in overruling the plea of former adjudication, or in rendering the decree appealed from; for we are of opinion that the motion to dismiss the suit, as one not really involving a controversy within its jurisdiction, [325] should have been sustained. It is provided by the fifth section of the Act of March 3, 1875 (18 Stat. at L. 472), determining the jurisdiction of the Circuit Courts of the United States, that if in any suit commenced in one of such courts "it shall appear to the satisfaction of said circuit court, at any time after such suit has been brought or removed thereto, that such suit does not really and substantially involve a dispute or controversy properly within the jurisdiction of said circuit court, or that the parties to said suit have been improperly or collusively made or joined, either as plaintiffs or defendants, for the purpose of creating a case cognizable or removable under this Act, the said circuit court shall proceed no further therein, but shall dismiss the suit or remand it to the court from which it was removed, as justice may require, and shall make such order as to costs as shall be just."

The case presents no question of a federal nature, and the jurisdiction of the circuit court

was invoked solely upon the ground that the plaintiff was a citizen of Tennessee, and the defendants citizens of Alabama. But if the plaintiff, who was a citizen of Alabama when the suit in the state court was determined, had not become, in fact, a citizen of Tennessee when the present suit was instituted, then, clearly, the controversy between him and the defendants was not one of which the circuit court could properly take cognizance; in which case it became the duty of that court to dismiss it. It is true that, by the words of the statute, this duty arose only when it appeared to the satisfaction of the court that the suit was not one within its jurisdiction. But if the record discloses a controversy of which the court cannot properly take cognizance, its duty is to proceed no further and to dismiss the suit; and its failure or refusal to do what, under the law applicable to the facts proved, it ought to do, is an error which this court, upon its own motion, will correct, when the case is brought here for review. The rule is inflexible and without exception, as was said, upon full consideration, in *Mansfield, C. & L. M. R. Co.* v. *Swan*, 111 U. S. 379, 382 [28:462, 463] "which requires this court, of its own motion, to deny its own jurisdiction, and, in the exercise of its appellate power, that of all other Courts of [326] the United States, in all cases where such jurisdiction does not affirmatively appear in the record on which, in the exercise of that power, it is called to act. On every writ of error or appeal, the first and fundamental question is that of jurisdiction, first, of this court, and then of the court from which the record comes. This question the court is bound to ask and answer for himself, even when not otherwise suggested, and without respect to the relations of the parties to it." To the same effect are *King Bridge Co.* v. *Otoe Co.* 120 U. S. 225 [30: 623]; *Grace* v. *Am. Cent. Ins. Co.* 109 U. S. 278, 283 [27:932, 934]; *Blacklock* v. *Small*, 127 U. S. 96, 105 [*ante*, 70] and other cases. These were cases in which the record did not affirmatively show the citizenship of the parties, the circuit court being without jurisdiction in either of them unless the parties were citizens of different States. But the above rule is equally applicable in a case in which the averment as to citizenship is sufficient, and such averment is shown, in some appropriate mode, to be untrue. While under the Judiciary Act of 1789, an issue as to the fact of citizenship could only be made by a plea in abatement, when the pleadings properly averred the citizenship of the parties, the Act of 1875 imposes upon the circuit court the duty of dismissing a suit, if it appears at any time after it is brought, and before it is finally disposed of, that it does not really and substantially involve a controversy of which it may properly take cognizance. *Williams* v. *Nottawa*, 104 U. S. 209, 211 [26: 719, 720]; *Farmington* v. *Pillsbury*, 114 U. S. 138, 143 [29:114, 116]; *Little* v. *Giles*, 118 U. S. 596, 602 [30:269, 271]. And the statute does not prescribe any particular mode in which such fact may be brought to the attention of the court. It may be done by affidavits, or the depositions taken in the cause may be used for that purpose. However done, it should be upon due notice to the parties to be affected by the dismissal.

It is contended that the defendant precluded himself from raising the question of jurisdiction, by inviting the action of the court upon his plea of former adjudication, and by waiting until the court had ruled that plea to be insufficient in law. In support of this position *Hartog* v. *Memory*, 116 U. S. 588 [29:725] is cited. We have already seen that this court must, upon its own motion, guard against any [327] invasion of the jurisdiction of the Circuit Court of the United States as defined by law, where the want of jurisdiction appears from the record brought here on appeal or writ of error. At the present term it was held that whether the circuit court has or has not jurisdiction is a question which this court must examine and determine, even if the parties forbear to make it or consent that the case be considered upon its merits. *Metcalf* v. *Watertown*, 128 U. S. 586 [*ante*, 543].

Nor does the case of *Hartog* v. *Memory* sustain the position taken by the defendant; for it was there said that "if, from any source, the court is led to suspect that its jurisdiction has been imposed upon by the collusion of the parties or in any other way, it may at once, of its own motion, cause the necessary inquiry to be made, either by having the proper issue joined and tried, or by some other appropriate form of proceeding, and act as justice may require for its own protection against fraud or imposition." In that case, the citizenship of the parties was properly set out in the pleadings, and the case was submitted to the jury without any question being raised as to want of jurisdiction, and without the attention of the court being drawn to certain statements incidentally made in the deposition of the defendant against whom the verdict was rendered. After verdict the latter moved for a new trial, raising upon that motion, for the first time, the question of jurisdiction. The court summarily dismissed the action, upon the ground, solely, of want of jurisdiction, without affording the plaintiff any opportunity whatever to rebut or control the evidence upon the question of jurisdiction. The failure, under the peculiar circumstances disclosed in that case to give such opportunity, was itself sufficient to justify a reversal of the order dismissing the action, and what was said that was irrelevant to the determination of that question was unnecessary to the decision, and cannot be regarded as authoritative. The court certainly did not intend in that case to modify or relax the rule announced in previous well considered cases. In the case before us the question was formally raised, during the progress of the cause, by written motion, of which the plaintiff had due notice, and to which he appeared [328] and objected. So that there can be no question as to any want of opportunity for him to be heard, and to produce evidence in opposition to the motion to dismiss.

We are thus brought to the question whether the plaintiff was entitled to sue in the circuit court. Was he, at the commencement of this suit, a citizen of Tennessee? It is true, as contended by the defendant, that a citizen of the United States can instantly transfer his citizenship from one State to another (*Cooper* v. *Galbraith*, 3 Wash. C. C. 546, 554), and that his right to sue in the courts of the United States

is none the less because his change of domicil was induced by the purpose, whether avowed or not, of invoking, for the protection of his rights, the jurisdiction of a federal court. As said by *Mr. Justice* Story, in *Briggs* v. *French*, 2 Sumn. 251, 256, "If the new citizenship is really and truly acquired, his right to sue is a legitimate, constitutional, and legal consequence, not to be impeached by the motive of his removal." *Manhattan L. Ins. Co.* v. *Broughton*, 109 U. S. 121, 125 [27:878, 880]; *Jones* v. *League*, 59 U. S. 18 How. 76, 81 [15: 263, 264]. There must be an actual, not pretended, change of domicil; in other words, the removal must be "a real one, *animo manendi*, and not merely ostensible." *Case* v. *Clarke*, 5 Mason, 70. The intention and the act must concur in order to effect such a change of domicil as constitutes a change of citizenship. In *Ennis* v. *Smith*, 55 U. S. 14 How. 400, 423 [14: 472] it was said that "A removal which does not contemplate an absence from the former domicil for an indefinite and uncertain time is not a change of it," and that while it was difficult to lay down any rule under which every instance of residence could be brought which may make a domicil of choice, "there must be, to constitute it, actual residence in the place with the intention that it is to be a principal and permanent residence."

Upon the evidence in this record, we cannot resist the conviction that the plaintiff had no purpose to acquire a domicil or settled home in Tennessee, and that his sole object in removing to that State was to place himself in a situation to invoke the jurisdiction of the Circuit Court of the United States. He went to Tennessee [329] without any present intention to remain there permanently or for an indefinite time, but with a present intention to return to Alabama as soon as he could do so without defeating the jurisdiction of the federal court to determine his new suit. He was therefore a mere sojourner in the former State when this suit was brought. He returned to Alabama almost immediately after giving his deposition. The case comes within the principle announced in *Butler* v. *Farnsworth*, 4 Wash. C. C. 101, 103, where *Mr. Justice* Washington said: "If the removal be for the purpose of committing a fraud upon the law, and to enable the party to avail himself of the jurisdiction of the federal courts, and that fact be made out by his acts, the court must pronounce that his removal was not with a *bona fide* intention of changing his domicil, however frequent and public his declarations to the contrary may have been.

The decree is reversed, with costs to the appellant in this Court, and the cause remanded, with a direction to dismiss the suit without costs in the court below.

---

[217] P. C. KIMMISH, *Plff. in Err.*,

v.

JOHN J. BALL ET AL.

(See S. C. Reporter's ed. 217-223.)

Iowa Law as to Texas cattle—not unconstitutional.

1. The Statute of Iowa (§ 4059, Iowa Code), which provides that any person who has in his possession in that State any Texas cattle, which have not been wintered North, shall be liable for any damages that may accrue from allowing such cattle to run at large, and thereby spreading the disease known as the Texas fever, is not in conflict with the paramount authority of Congress to regulate interstate commerce.

2. There is no necessary dependence of the provisions of said section 4059 imposing a civil liability, upon those of section 4058 of the same Code, so that the one may not stand without the other.

3. Said section 4059, is not in conflict with section 2 of article 4 of the Constitution of the United States relative to the privileges and immunities of citizens of the several States.

[No. 1254.]

Submitted Jan. 2, 1889. Decided Jan. 28, 1889.

IN ERROR to the Circuit Court of the United States for the Southern District of Iowa. On a certificate of division in opinion as to the constitutionality of section 4059 of the Code of Iowa. *Reversed.*

Statement by *Mr. Justice* **Field:**

This case comes from the Circuit Court of the United States for the Southern District of Iowa. It involves the validity of a statute of that State, making a person having in his possession within it any Texas cattle which have not been wintered north of the southern boundary of Missouri and Kansas, liable for any damages that may accrue from allowing them to run at large, and thereby spread the disease known as Texas fever. The statute is found in section 4059 of the Code of Iowa, which refers to the preceding section, 4058. The two sections are as follows:

"Sec. 4058. If any person bring into this State any Texas cattle, he shall be fined not exceeding $1,000 or imprisoned in the county jail not exceeding thirty days, unless they have been wintered, at least one winter, north of the southern boundary of the State of Missouri or Kansas; *Provided*, That nothing herein contained shall be construed to prevent or make unlawful the transportation of such cattle through this State on railways, or to prohibit the driving through any part of this State, or [218] having in possession, any Texas cattle, between the first day of November and the first day of April following.

"Sec. 4059. If any person now or hereafter has in his possession, in this State, any such Texas cattle, he shall be liable for any damages that may accrue from allowing said cattle to run at large, and thereby spreading the disease known as the Texas fever, and shall be punished as is prescribed in the preceding section."

The action is based upon this latter section. The petition of the plaintiff alleges that in June, 1885, the defendants were the owners of and had in their possession and under their control a herd of Texas cattle, which had not been wintered north of the southern boundary of Missouri or Kansas, and which were purchased at or near Fort Smith, in Arkansas; that said cattle, while in the possession and under the control of the defendants, were allowed by them to run at large in Union Township, Harrison County, Iowa, contrary to the provisions of section 4059 of its Code; and that the said cattle were infected by a disease known as "Texas cattle fever," which was spread and disseminated by them among

the cattle of the plaintiff, whereby they sickened and died, to his damage of $5,000, for which he prays judgment.

To this petition the defendants demurred on the grounds: first, that sections 4058 and 4059 are in conflict with section 8, article 1 of the Constitution of the United States, in that the Legislature of Iowa undertakes by them to regulate and interfere with interstate commerce; and second, that the sections are in conflict with section 2 of article 4 of the Constitution of the United States relative to the privileges and immunities of citizens of the several States.

The demurrer was heard at March Term, 1888, of the circuit court, the court being held by two judges who were opposed in opinion upon the constitutionality of section 4059, on the grounds mentioned. The plaintiff electing to stand upon his petition, judgment was entered for the defendants, sustaining the demurrer, according to the opinion of the presiding judge. Thereupon, on motion of the plaintiff, it was ordered that the points of disagreement be certified to this court; and upon this certificate the case has been heard.

[219]

Mr. **I. N. Flickinger,** for plaintiff in error:

If, by a fair and reasonable interpretation, where the case is at all doubtful, it can be reconciled with the Constitution, it ought to be done.

Adams v. *Storey*, 1 Paine, 79; Cooley, Const. Lim. 4th ed. 182; *Gates* v. *Brooks*, 59 Iowa, 510.

Every statute is presumed to be constitutional. *Munn* v. *Ill.* 94 U. S. 113 (24: 77).

Statutes will be declared unconstitutional only when clearly necessary.

State v. *Davis Co. Judge*, 2 Iowa, 280; *Stewart* v. *Polk Co.* 30 Iowa, 9.

Where part of a statute is unconstitutional, that fact does not authorize the court to declare the remainder void, if the provisions are distinct and severable.

Cooley, Const. Lim. 182: *Drady* v. *Des Moines & Ft. D. R. Co.* 57 Iowa, 398; *Penniman's Case*, 103 U. S. 714 (26: 602); *Duer* v. *Small*, 17 How. Pr. 205; *Allen* v. *La.* 103 U. S. 83 (26: 319); *Fla. Cent. R. Co.* v. *Schutte*, 103 U. S. 118 (26: 327); *Keokuk N. L. Packet Co.* v. *Keokuk*, 95 U. S. 89 (24: 381).

In the exercise of its police power a State may, absolutely and unconditionally, restrain any and all live stock from running at large; and this without any reason or grounds other than that of expediency—as determined by their legislative will.

Campau v. *Langley*, 39 Mich. 451; *Wilcox* v. *Hemming*, 58 Wis. 144; *Rockwell* v. *Nearing*, 35 N. Y. 302; *Campbell* v. *Evans*, 45 N. Y. 356; *Cook* v. *Gregg*, 46 N. Y. 439; *Varden* v. *Mount*, 78 Ky. 86; *Roberts* v. *Ogle*, 30 Ill. 459.

Mr. **W. F. Sapp** for defendants in error.

Mr. Justice **Field** delivered the opinion of the court:

In order to understand section 4059 of the Code of Iowa, it must be read in connection with the preceding section 4058, to which it refers. It must also be known what is meant by "Texas cattle," and what influence a winter North has upon the disease called "Texas fever," with which such cattle are liable to be infected. Section 4058 is leveled against the importation of Texas cattle which have not been wintered north of the southern boundary of Missouri or Kansas. Any person bringing into the State Texas cattle, unless they have been thus wintered, is subject to be fined or imprisoned. When, therefore, section 4059 refers to the possession in the State of any "such Texas cattle" it means cattle which have not been wintered North, as mentioned in the preceding section. It is only when they have not been thus wintered that apprehension is felt that they may be infected with the disease and spread it among other cattle.

The term "Texas cattle" is not defined in the Code of Iowa; and whether used there to designate cattle from the State of Texas alone, or, as averred by the plaintiff in error, a particular breed or variety called Mexican or Spanish cattle, which are also found in Arkansas and the Indian Territory, is not material for the disposition of this case. Cattle coming from both of those States and from that Territory during the spring and summer months are often infected with what is known as Texas fever. It is supposed that they become infected with the germs of this distemper while feeding, during those months, on the low and moist grounds of those States and Territory, constituting what are called their malarial districts, which are largely covered with a thick vegetable growth. These germs are communicated to domestic cattle by contact, or by feeding in the same range or pasture. Scientists are not agreed as to the causes of the malady; and it is not important for our decision which of the many theories advanced by them is correct. That cattle coming from those sections of the country during the spring and summer months are often infected with a contagious and dangerous fever is a notorious fact; as is also the fact that cold weather, such as is usual in the winter north of the southern boundary of Missouri and Kansas, destroys the virus of the disease, and thus removes all danger of infection. It is upon these notorious facts that the legislation of Iowa for the exclusion from their limits of these cattle, unless they have passed a winter North, is based. See *Missouri Pac. R. Co.* v. *Finley*, 38 Kan. 556; also, First Annual Report to the Commissioner of Agriculture, of the Bureau of Animal Industry for 1884, p. 426, and Second Annual Report of same Bureau for 1885, p. 310.

[220]

Section 4059, with which we are concerned, provides that any person who has in his possession in the State of Iowa any Texas cattle which have not been wintered North shall be liable for any damages that may accrue, from allowing such cattle to run at large and thereby spread the disease. We are unable to appreciate the force of the objection that such legislation is in conflict with the paramount authority of Congress to regulate interstate commerce. We do not see that it has anything to do with that commerce; it is only leveled against allowing diseased Texas cattle held within the State to run at large. The defendants labor under the impression that the validity of section 4058, which is directed against the importation into the State of such cattle unless they have been wintered North, is before

[221]

us, and that a consideration of its validity is necessary in passing upon section 4059; but this is a mistake. Section 4058 is before us only that we may ascertain from it the meaning intended by certain terms used in the subsequent section referring to it, and not upon any question of its constitutionality.

Nor does the case of *Railroad Company* v. *Husen*, 95 U. S. 465 [24: 527], upon which the defendant relies with apparent confidence, have any bearing upon the questions presented. The decision in that case rested upon the ground that no discrimination was made by the Law of Missouri, in the transportation forbidden, between sound cattle and diseased cattle; and this circumstance is prominently put forth in the opinion. "It is noticeable," said the court, "that the statute interposes a direct prohibition against the introduction into the State of all Texas, Mexican, or Indian cattle during eight months of each year, without any distinction between such as may be diseased and such as are not." p. 469 [529]. It interpreted the Law of Missouri as saying to all transportation companies: "You shall not bring into the State any Texas cattle or any Mexican cattle or Indian cattle between March 1 and December 1 in any year, no matter whether they are free from disease or not, no matter whether they may do an injury to the inhabitants of the State or not; and if you do bring them in, even for the purpose of carrying them through the State without unloading them, you shall be subject to extraordinary liabilities." p. 473 [531]. Such a statute, the court held, was not a quarantine law, nor an inspection law, but a law which interfered with interstate commerce, and therefore invalid. At the same time the court admitted, unhesitatingly, that a State may pass laws to prevent animals suffering from contagious or infectious diseases from entering within it. p. 472 [530]. No attempt was made to show that all Texas, Mexican, or Indian cattle coming from the malarial districts during the months mentioned were infected with the disease, or that such cattle were so generally infected that it would have been impossible to separate the healthy from the diseased. Had such proof been [222] given, a different question would have been presented for the consideration of the court. Certainly all animals thus infected may be excluded from the State by its laws until they are cured of the disease, or at least until some mode of transporting them without danger of spreading it is devised.

Railroad Company v. *Husen* gives no support to the contention of the defendant. There is no necessary dependence of the provisions of section 4059, imposing a civil liability, upon those of section 4058, so that the one may not stand without the other. If the criminal liability created by section 4058 is open to doubt, which we do not affirm, the civil liability may remain for the damages caused by the willful conduct designated in section 4059. *Keokuk N. L. Pack et Co.* v. *Keokuk*, 95 U. S. 80 [24: 377]; *Allen* v. *La.* 103 U. S. 80 [26: 318].

The case is, therefore, reduced to this: whether the State may not provide that whoever permits diseased cattle in his possession to run at large within its limits, shall be liable for any damages caused by the spread of the disease occasioned thereby; and upon that we do not entertain the slightest doubt. Our answer, therefore, to the first question upon which the judges below differed is in the negative, that the section in question is not unconstitutional by reason of any conflict with the commercial clause of the Constitution.

As to the second question, our answer is also in the negative. There is no denial of any rights and privileges to citizens of other States which are accorded to citizens of Iowa. No one can allow diseased cattle to run at large in Iowa without being held responsible for the damages caused by the spread of disease thereby; and the clause of the Constitution declaring that the citizens of each State shall be entitled to all privileges and immunities of citizens in the several States does not give nonresident citizens of Iowa any greater privileges and immunities in that State than her own citizens there enjoy. So far as liability is concerned for the act mentioned, citizens of other States and citizens of Iowa stand upon the same footing. *Paul* v. *Va.* 75 U. S. 8 Wall. 168 [19: 357].

It follows that the judgment below must be reversed and the cause remanded for a new trial.

JOHN H. HARRIS, *Plff. in Err.*, [366]

v.

AMAZIAH D. BARBER.

(See S. C. Reporter's ed. 366-372.)

Certiorari—*questions reviewable—jurisdictional amount—appeal—complaint, sufficiency of—errors.*

1. A writ of *certiorari*, when its object is to bring up after judgment the proceedings of an inferior court or tribunal whose procedure is not according to the course of the common law, is in the nature of a writ of error.

2. Although the granting of the writ of *certiorari* rests in the discretion of the court, yet, after the writ has been granted, and the record certified in obedience to it, the questions arising upon that record must be determined according to fixed rules of law; and their determination is reviewable on error.

3. Where the petition for the writ of *certiorari* alleges, upon the oath of the petitioner, that he is in the possession of the premises under a lease having nearly a year to run, with a privilege of extension for four years more, and that he has expended $15,000 in permanent improvements upon the leased property, of which he will be deprived if the judgment of the inferior court, which he alleges to be void for want of jurisdiction, is not set aside by writ of *certiorari*—*held*, that the reasonable inference from this is, that the possession of the premises, with the right to use these improvements, throughout the lease and the extension thereof, is worth more than $5,000, showing that the matter in dispute is of sufficient pecuniary value to support the jurisdiction of this court, under the Act of March 3, 1885, chap. 355. 23 Stat. at L. 443.

4. As by the Revised Statutes of the District of Columbia, an appeal lies from the judgment of a justice of the peace, his proceedings cannot be quashed by writ of *certiorari*, unless for want of jurisdiction, appearing on the face of his record.

5. In proceedings under the Landlord and Tenant Act of the District of Columbia, oath to the complaint before a notary public in the State of New York is sufficient, as such Act only requires a written complaint on oath of the person entitled to the premises. Where the complaint, in such proceedings, does not allege that the complainant is

entitled to the premises, but only that he is entitled to the possession of the premises, the difference is immaterial.

6. The requirements of that Act are satisfied by allegations in the complaint, that the complainant is entitled to the possession of the premises, that they are detained from him and held without right by the defendant, that the defendant is his tenant at sufferance, and that the defendant's tenancy and estate in the premises have been determined by a notice to quit.

7. *Certiorari* goes only to the jurisdiction. It does not go to any errors of judgment that may have been committed by the justice in the progress of the exercise of that jurisdiction.

[No. 1443.]

Submitted Jan. 7, 1889. Decided Jan. 28, 1889.

IN ERROR to the Supreme Court of the District of Columbia, to review a judgment affirming, in General Term, a judgment of the Special Term quashing a writ of *certiorari* to a Justice of the Peace to bring up, after judgment, proceedings under the Landlord and Tenant Act.

On motion to dismiss or affirm. *Affirmed.*

[367] Statement by *Mr. Justice* **Gray:**

This was a writ of error to reverse a judgment quashing a writ of *certiorari* to a justice of the peace.

On December 17, 1887, John H. Harris filed in the Supreme Court of the District of Columbia a petition, verified by his oath, and alleging "that he is in possession of the house and premises known as the Harris House, Nos. 1327-1329 E Street northwest, in the City of Washington, in the District of Columbia, under a lease to him from Mary A. Matteson, dated May 3, 1883, and modified April 20, 1885, for a term ending October 1, 1889, at a rent of $3,000 per annum, with the privilege of extension for a further term of four years at a rent of $4,000 per annum; that under the terms of said lease he expended about $15,000 in permanent improvements and betterments to said building, put it in tenantable condition, and paid the taxes assessed thereon until the sale hereinafter mentioned, besides expending upwards of $20,000 in furniture and appliances for its use as a hotel; that he did this upon the faith and expectation of enjoying his full term as tenant of said premises; that on May 4, 1886, the said land and premises were sold under a deed of trust prior in date to the lease of your petitioner, and of which your petitioner was in actual ignorance at the time of said lease, and were purchased by one Amaziah D. Barber, who, a few days after said sale, notified your petitioner to quit said premises, and on July 31, 1886, instituted a proceeding under the Act of Congress regulating proceedings in cases between landlord and tenant in the District of Columbia, before William Helmick, justice of the peace for said District of Columbia; and on August 14, 1886, said justice of the peace rendered judgment against your petitioner for the possession of said premises."

The petition asserted that the proceedings before the justice were void for want of jurisdiction; because the oath to the complaint was not taken before the justice, but before a notary public in the County of Oneida and State of New York; and because "the relation of landlord and tenant did not exist between said Barber and your petitioner by convention, and said Barber relying upon the absence of such relation for his right to possession, his only remedy was by an action of ejectment."

The petition prayed for a writ of *certiorari*, [368] commanding the justice to certify and send up the record of his proceedings. A writ of *certiorari* was issued accordingly; and in obedience to it the justice returned his record, by which it appeared that the complaint to him was subscribed and sworn to by the complainant before a notary public in the County of Oneida and State of New York, and that the whole complaint, except the address and the prayer for process, was as follows:

"Your complainant, Amaziah D. Barber, respectfully represents that he is entitled to the possession of the tenement and premises known as the Harris House, situate on lot five in square No. 254 in the City of Washington, District of Columbia, and that the same is detained from him and held without right by John H. Harris, tenant thereof by sufferance of this complainant, and whose tenancy and estate therein has been determined by the service of a due notice to quit, of thirty days, in writing."

The Supreme Court of the District of Columbia in special term, upon the motion of Barber, rendered judgment quashing the writ of *certiorari;* and that judgment was affirmed in general term. 6 Mackey, 586. Harris sued out this writ of error.

Barber now filed a motion to dismiss the writ of error for want of jurisdiction, as well as a motion to affirm the judgment.

Messrs. **James S. Edwards** and **Job Barnard,** for defendant in error, in support of motions:

A proceeding originating in the Supreme Court of the District of Columbia by the filing of the petition for the writ of *certiorari*, does not involve the validity of any Statute of the United States, or any subject matter which can be in any way estimated in money, so as to say that over $5,000 is in dispute.

De Krafft v. *Barney*, 67 U. S. 2 Black, 704 (17: 350).

It only involves the right of possession of certain premises, the possession of which may or may not be of money value to either party.

Elgin v. *Marshall*, 106 U. S. 578 (27: 249.)

The allowance of a writ of *certiorari* is a matter of discretion.

2 Wait, Act. & Def. 135; *Re Lantis*, 9 Mich. 824.

The merits of the action are not involved.

Maybee v. *Miner*, 44 Mich. 207.

Harris, still remaining in possession after said sale, became, by operation of law, tenant of the purchaser by sufferance, and was liable to have said tenancy terminated by a thirty days' notice to quit, which was given.

Luche v. *Jones*, 1 MacArt. 346; *Kinsley* v. *Ames*, 2 Met. 29; *Howard* v. *Merriam*, 5 Cush. 576; *Keech* v. *Hall*, 1 Doug. K. B. 21; Wood, Land. & T. 185, 190, 191; Taylor, Land. & T. 14, 46, 57, notes.

Whether the judgment of the justice of the peace is erroneous or not cannot be questioned on an application for writ of *certiorari*. The correctness of his judgment can only be inquired into on appeal.

2 Wait, Act. & Def. 139; *Owens* v. *State*, 27 Wis. 456; *People* v. *Van Alstyne*, 32 Barb. 131; *People* v. *Betts*, 55 N. Y. 600; *People* v. *County Judge*, 40 Cal. 479.

Certiorari, at common law, will only lie to inferior jurisdictions in cases where they proceed illegally, and where no appeal or other mode of directly reviewing their proceedings is provided by law.

Farrell v. *Taylor*, 12 Mich. 113; *Ennis* v. *Ennis*, 110 Ill. 78, 82; *Miller* v. *School Trustees*, 88 Ill. 26; *Witkowski* v. *Skalowski*, 46 Ga. 41; *People* v. *Shepard*, 28 Cal. 115.

Every presumption will obtain in favor of sustaining the jurisdiction.

Baizer v. *Lasch*, 28 Wis. 268; 2 Wait, Act. & Def. 139; *Williamson* v. *Carnan*, 1 Gill & J. 196; *Chicago & R. I. R. Co.* v. *Fell*, 22 Ill. 333; *Charter Oak L. Ins. Co.* v. *Tallmadge*, 3 MacArt. 422.

Negligence and laches of the petitioner in defending his suit, or in taking an appeal, or in applying for the writ, will debar him from his remedy where otherwise it might have been granted him.

Dye v. *Noel*, 85 Ill. 290; *School Trustees* v. *School Directors*, 88 Ill. 100; 2 Wait, Act. & Def. 138; *Erwin* v. *Erwin*, 3 Dev. L. 528; *Re Lantis*, 9 Mich. 324.

Mr. **A. C. Bradley**, for plaintiff in error, in opposition:

The motion to affirm will not be granted unless it clearly appears that the writ of error is prosecuted for the mere purpose of delay, and that the questions involved are so frivolous as not to need further argument.

Hinckley v. *Morton*, 103 U. S. 764 (26:458); *Micas* v. *Williams*, 104 U. S. 556 (26:842); *Evans* v. *Brown*, 109 U. S. 180 (27:898).

Certiorari is the proper remedy.

People v. *Suffolk Co. Judges*, 24 Wend. 253; *Gaither* v. *Watkins*, 66 Md. 580, 6 Cent. Rep. 483.

The proceedings must show that every step necessary to confer jurisdiction has been duly and regularly taken.

Freeman, Judgm. §§517, 527; *Evertson* v. *Sutton*, 5 Wend. 285.

The Act of July 4, 1864, 13 Stat. at L. 383, was intended to apply only to cases in which the relation of landlord and tenant existed by convention of the parties, express or implied.

Evertson v. *Sutton*, 5 Wend. 281; *Roach* v. *Cosine*, 9 Wend. 227; *People* v. *Simpson*, 28 N. Y. 55; *Hastings* v. *Pratt*, 8 Cush. 121; *Boyle* v. *Boyle*, 121 Mass. 85; *Reed* v. *Elwell*, 46 Maine, 278; *Leavitt* v. *Wallace*, 12 N. H. 489.

The failure to state the facts is fatal to the proceeding.

Ricketson v. *Richardson*, 26 Cal. 153; *Forbes* v. *Hyde*, 31 Cal. 353; *People* v. *Matthews*, 38 N. Y. 451; *Hill* v. *Stocking*, 6 Hill. 314; *Sims* v. *Humphrey*, 4 Denio, 185; *Fowler* v. *Roe*, 25 N. J. L. 549; *Shepherd* v. *Sliker*, 31 N. J. L. 432; *McGinnis* v. *Vernon*, 67 Pa. 149; *McDermott* v. *McIlwain*, 75 Pa. 341; *Evans* v. *Müller*, 25 Mo. 195.

Mr. Justice **Gray** delivered the opinion of the court:

The grounds relied on in support of the motion to dismiss this writ of error are, in substance, that the granting or refusing of a writ of *certiorari* is a matter of discretion, and not the subject of review; that there is no sufficient pecuniary value in dispute to support the jurisdiction of this court; and that the proceedings [369] of a justice of the peace under the Landlord and Tenant Act of the District of Columbia cannot be reviewed, except by appeal.

The writ of error before us is not upon the judgment of the justice in the landlord and tenant process, but upon the judgment of the Supreme Court of the District of Columbia quashing the writ of *certiorari* to the justice. The last ground assigned for the motion to dismiss is untenable, because it affects the correctness of the judgment quashing the writ of *certiorari*, and not the jurisdiction of this court to review that judgment.

The other grounds for the motion to dismiss, though more plausible, appear, upon examination, to be also insufficient.

A writ of *certiorari*, when its object is not to remove a case before trial, or to supply defects in a record, but to bring up, after judgment, the proceedings of an inferior court or tribunal whose procedure is not according to the course of the common law, is in the nature of a writ of error. Although the granting of the writ of *certiorari* rests in the discretion of the court, yet, after the writ has been granted, and the record certified in obedience to it, the questions arising upon that record must be determined according to fixed rules of law, and their determination is reviewable on error. *People* v. *Brooklyn Assessors*, 39 N. Y. 81; *People* v. *Brooklyn Fire Comrs.* 103 N. Y. 370 [4 Cent. Rep. 774]; *Farmington R. W. Power Co.* v. *Berkshire Co.* 112 Mass. 206, 212.

It is argued that the justice of the peace had no jurisdiction to try the title to land; Rev. Stat. D. C. §§ 687, 997; that the only matter in dispute before him was the right of possession; and that the rental value of the property in question cannot be considered as in dispute, because, whatever the judgment might be in the action for possession, the defendant would have to pay that value, either as rent under the lease if the judgment should be in his favor, or for use and occupation if the judgment should be against him.

The case differs from any of the precedents cited at the bar, and is not free from difficulty. But the petition for the writ of *certiorari* alleges, upon the oath of the petitioner, that he is in the possession of the premises under a lease [370] having nearly a year to run, with a privilege of extension for four years more; and that he has expended $15,000 in permanent improvements upon the leased property, of which he will be deprived, if the judgment of the justice of the peace, which he alleges to be void for want of jurisdiction, is not set aside by writ of *certiorari*. The reasonable inference from this is that the possession of the premises, with the right to use these improvements, throughout the lease and the extension thereof, would be worth more than $5,000, showing that the matter in dispute is of sufficient pecuniary value to support the jurisdiction of this court, under the Act of March 3, 1885, chap. 355. 23 Stat. at L. 443.

But, upon the merits of the case, the judgment below is so clearly right that the motion to affirm must be granted.

The Landlord and Tenant Act, embodied in

the Revised Statutes of the District of Columbia, provides not only that every occupation, possession or holding of real estate without express contract or lease, or by a contract or lease the terms of which have expired, shall be deemed a tenancy at sufferance, but also that "All estates at sufferance may be determined by a notice in writing to quit of thirty days;" and that "when forcible entry is made, or when a peaceable entry is made and the possession unlawfully held by force, or when possession is held without right after the estate is determined by the terms of the lease, by its own limitation, or by notice to quit, or otherwise," then, "on written complaint on oath of the person entitled to the premises, to a justice of the peace, charging such forcible entry or detainer of real estate"—that is to say, charging either a "forcible entry," or any "detainer," whether forcible after a peaceable entry, or without right after the estate is determined—a summons may be issued to the person complained of; and if it appears that the complainant is entitled to the possession of the premises, he shall have judgment for the possession and costs, but if the complainant fails to prove his right to possession, the defendant shall have judgment for costs; and that either party may appeal from the judgment of the justice of the peace to the Supreme Court of the District of Columbia. R. S. D. C. §§ 680, 681, 684, 686, 688.

[371] As an appeal lies from the judgment of the justice of the peace, his proceedings cannot be quashed by writ of *certiorari*, unless for want of jurisdiction, appearing on the face of his record. *People* v. *Betts*, 55 N. Y. 600; *Gaither* v. *Watkins*, 66 Md. 576 [6 Cent. Rep. 483].

It is suggested that the justice of the peace had no jurisdiction, because the oath to the complaint was not taken before him, but before a notary public in the State of New York. But the statute only requires a "written complaint on oath of the person entitled to the premises." R. S. D. C. § 684. As it requires the oath to be made by the complainant in person, and does not in terms require it to be administered by the justice or within the District, it is a more reasonable construction to permit the oath to be taken anywhere before a proper officer than to require the personal attendance of the complainant at the filing of the complaint.

It is further suggested that the complaint does not allege that the complainant is "entitled to the premises," but only that he is "entitled to the possession" of the premises. But as the whole scope and aim of the complaint are to recover the possession, the difference is immaterial.

The remaining suggestion is that the complaint does not show the defendant to have been such a tenant as is contemplated by the Landlord and Tenant Act of the District of Columbia. But that Act, as we have seen, provides that all tenancies at sufferance may be determined by thirty days' written notice to quit, and does not require the facts constituting the relation of landlord and tenant to be set forth in the complaint. Its requirements are satisfied, at least so far as to support the jurisdiction of the justice, by the distinct allegations in the complaint before us, that the complainant is entitled to the possession of the premises; that they are detained from him and held without right by the defendant; that the defendant is his tenant at sufferance, and that the defendant's tenancy and estate in the premises have been determined by such a notice to quit.

As was well said by *Mr. Justice* Merrick in delivering the opinion of the court below, "These averments constitute, fully, a statement [372] of the relation of landlord and tenant between the parties. Now whether the proof came up to those averments or not cannot be inquired into upon a writ of *certiorari*. *Certiorari* goes only to the jurisdiction. It does not go to any errors of judgment that may have been committed by the justice in the progress of the exercise of that jurisdiction."

The decisions cited at the bar, made under statutes requiring the proceedings to be commenced by affidavit of the facts requisite to bring the case within the statutes, and giving no appeal from the decision of the justice of the peace,* have no application to this case.

Judgment affirmed.

THE PATTEE PLOW COMPANY, *Appt.*, [294]
v.
KINGMAN & COMPANY ET AL.

(See S. C. Reporter's ed. 294-305.)

Patent right—infringement—enlarged claim—state of the art—improvements in cultivators—want of novelty.

1. In an action for infringement of the second claim of reissued letters patent No. 6080, dated October 6, 1874, to J. H. Pattee, of the first and second claims of original patent No. 174,684, granted Thomas W. Kendall, March 14, 1876; and of original patent No. 187,899, granted Henry H. Pattee, February 27, 1877; all for improvements in cultivators; *held*, that the reissue if valid, when limited to what alone could be claimed as new, is not infringed by appellee.

2. As to reissued patent 6080, the eveners bring elements of the second claim, the effect of their omission and of hitching directly to the draft plates instead of to the eveners, is to enlarge the claim; and the reissue must be held to have been illegally expanded. There is, also, an omission which tends, by reducing the number of elements, to render its scope less narrow than that of the original.

3. A reissue can only be granted for the same invention intended to be embraced by the original patent; and the specification cannot be substantially changed, either by the addition of new matter or the omission of important particulars, so as to enlarge the invention as intended to be originally claimed.

4. When the extent of the invention is determined, as it must be, by reference to the state of the art, the appellee's machine does not infringe in respect to those parts of the claim which can be held to have been unanticipated.

5. As to the Kendall patent, No. 174,684, there is no infringement.

6. The use of parallel bars described in patent No. 187,899 is common, and so far as the attachment of the bars to the end plates is concerned, there is nothing new.

7. All these patents are simply modes of construction; that described in patent No. 187,899 embraces nothing that is not old and really nothing that is patentable, that is, which involves invention rather than mechanical skill.

*N. Y. R. S. pt. 3, chap. 8, tit. 10; Hill v. Stocking, 6 Hill, 314; Sims v. Humphrey, 4 Denio, 185; People v. Matthews, 38 N. Y. 451; N. J. Stat., March 4, 1847, Nixon's Digest (2d ed.) 422; Fowler v. Roe, 25 N. J. L. 549; Shepherd v. Sliker, 31 N. J. L. 432.

[No. 88.]

Argued Nov. 16, 19, 1888. Decided Feb. 4, 1889.

APPEAL from a decree of the Circuit Court of the United States for the Eastern District of Missouri, dismissing a suit for the infringement of letters patent. *Affirmed.*

The facts are stated in the opinion, and following are the principal figures referred to therein:

The English patent to Tasker is not an anticipation.

Seymour v. *Osborne*, 78 U. S. 11 Wall. 516 (20: 83); *Cohn* v. *U. S. Corset Co.* 93 U. S. 366 (23: 907); *The Cawood Patent*, 94 U. S. 695 (24: 238); *Downton* v. *Yeager Milling Co.* 108 U. S. 471 (27: 791).

The second claim of the reissue is valid, being the same as, and a restatement of, the first claim of the original patent.

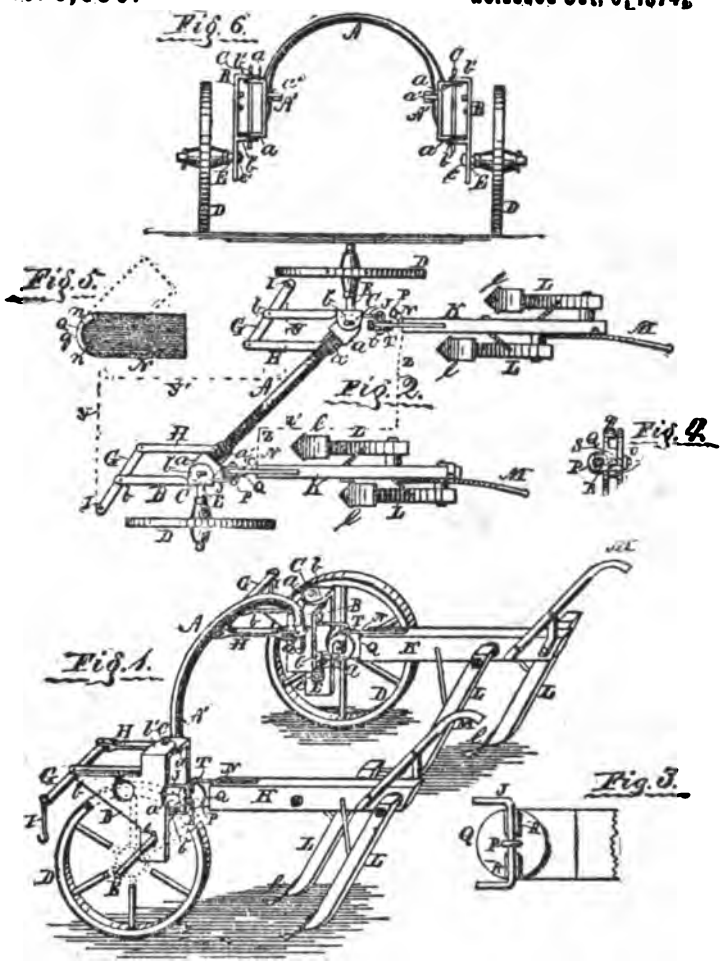

Mr. **John R. Bennett,** for appellant:

There is no authority for the contention that the second claim of the Pattee reissue should be interpreted to include the eveners.

The court will not defeat the clear intention of the inventor by reading into the claim that which he has carefully excluded from it.

White v. *Dunbar*, 119 U. S. 51 (30: 304); *Lehigh Valley R. Co.* v. *Mellon*, 104 U. S. 118 (26: 641).

Gage v. *Herring*, 107 U. S. 640 (27: 601).

An English patent, to anticipate a United States patent, must exhibit and describe the patented invention in such full, clear and exact language as to enable a person skilled in the art to which the invention relates to understand and construct it without the aid of invention.

Seymour v. *Osborne*; *Cohn* v. *U. S. Corset Co.*; *The Cawood Patent*; and *Downton* v. *Yeager Milling Co. supra.*

Messrs. **L. L. Bond** and *E. A. West*, for appellees:

T. W. KENDALL.
CULTIVATOR.
No. 174,684. Patented March 14, 1876

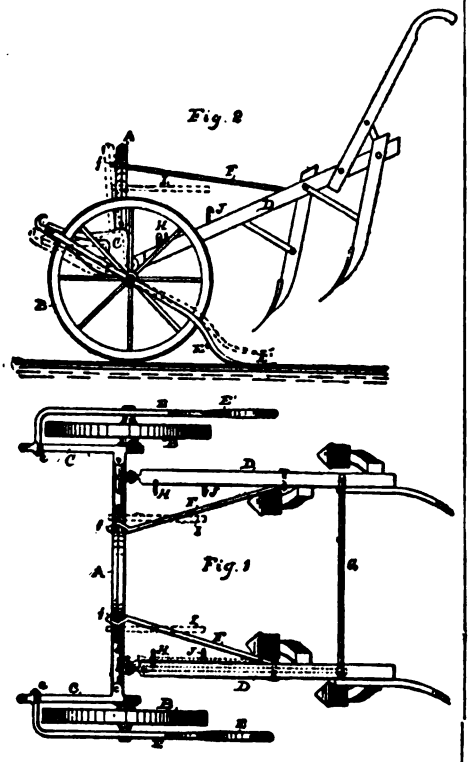

The machine controls the specification, and the machine and specification control the claims.

Case v. *Brown*, 69 U. S. 2 Wall. 320 (17: 817); *Fay* v. *Cordesman*, 109 U. S. 420 (27: 984); *Bussey* v. *Excelsior Mfg. Co.* 110 U. S. 187 (28: 97); *Clements* v. *Odorless Excavating Apparatus Co.* 109 U. S. 648 (27: 1063).

If the claim has been enlarged, and more than two years elapsed between the issue and reissue, then the rule stated by the supreme court in *Miller* v. *Bridgeport Brass Co.* 104 U. S. 350 (26: 783), will apply.

James v. *Campbell*, 104 U. S. 356 (26: 786); *Johnson* v. *Flushing & N. S. R. Co.* 105 U. S. 539 (26: 1162); *Bants* v. *Frantz*, 105 U. S. 160 (26: 1013); *Wing* v. *Anthony*, 106 U. S. 142 (27: 110); *Hoffheins* v. *Russell*, 107 U. S. 132 (27: 332); *McMurray* v. *Mallory*, 111 U. S. 97 (28: 365); *Turner & S. Mfg. Co.* v. *Dover Stamping Co.* 111 U. S. 319 (28: 442); *Wollensak* v. *Reiher*, 115 U. S. 96 (29: 350); *Clements* v. *Odorless Excavating Apparatus Co.* 109 U. S. 641 (27: 1060).

The specification could not be substantially changed so as to enlarge the scope of the invention as originally claimed.

Russell v. *Dodge*, 93 U. S. 463 (28: 974); *Johnson* v. *Flushing & N. S. R. Co.* 105 U. S. 546 (26: 1165); *Torrent & Arms Lumber Co.* v. *Rodgers*, 112 U. S. 659 (28: 843).

The application of an old process or a machine to a similar or analogous subject will not sustain a patent.

Pa. R. Co. v. *Locomotive E. S. Truck Co.* 110 U. S. 490 (28: 222).

Mr. Chief Justice **Fuller** delivered the opinion of the court: [295]

This is an appeal from a decree of the Circuit Court of the United States for the Eastern District of Missouri, dismissing appellant's bill of complaint.

The bill charges appellees with infringement of the second claim of reissue letters patent No. 6080, dated Octobor 6, 1874, which is a reissue of original patent No. 124,218, to J. H. Pattee, dated March 5, 1872; of the first and second claims of original patent No. 174,684, granted Thomas W. Kendall, March 14, 1876; and of original patent No. 187,899, granted Henry H. Pattee, February 27, 1877; all for improvements in cultivators.

Appellee is an Illinois corporation, having a branch house in St. Louis, selling, among other things, cultivators manufactured by B. D. Buford & Co., at Rock Island, Illinois, which are the alleged infringing machines.

The opinion of the circuit court was as follows:

"Reissued patent 6080, of 1874, second claim of which is under consideration, has, as to that claim, expanded the original beyond legal limits. Therefore, said reissued patent is void to the extent claimed, wherein the defendant is alleged to have infringed. Second, as to the Kendall patent No. 174,684, there is no infringement. Third, as to the Pattee patent of 1877, No. 187,899, said patent is void, there being no novelty of invention therein that is patentable."

The second specification of the original Pattee patent, No. 124,218, states that the invention consists—

"in pivoting the wheels to the axle in such manner that the wheels may either one be advanced forward of the other, throwing the axle diagonal with the line of progression, while the wheels preserve the same relative position to the said line of progression."

The second specification of the reissue reads as follows: [296]

"It consists in *hinging the ends of the axle to plates, to which the draft animals are attached, and which are supported on wheels* in such manner that the wheels *are retained in the line of progression of the machine by the draft of the animals, and* may either one be advanced forward of the other, throwing the axle diagonal with the line of progression, while the wheels preserve the same relative position to the said line of progression."

The fourth specification of the original is:

"It consists in the peculiar construction of the hitching device, allowing the draft animals to advance or recede, the one ahead or in the rear of the other, without influencing the plow beams to the extent of the variation made by the said animals, all as hereinafter fully described."

The sixth specification of the reissue is:

"It consists in the *arrangement* of *a* hitching device *with the draft-plates, which allow* the draft animals to advance or recede, the one ahead or in rear of the other, without influencing the plow beams to the extent of the variation made by the said animals, all as hereinafter fully described."

The description of the accompanying drawings is given in the original and in the reissue, thus:

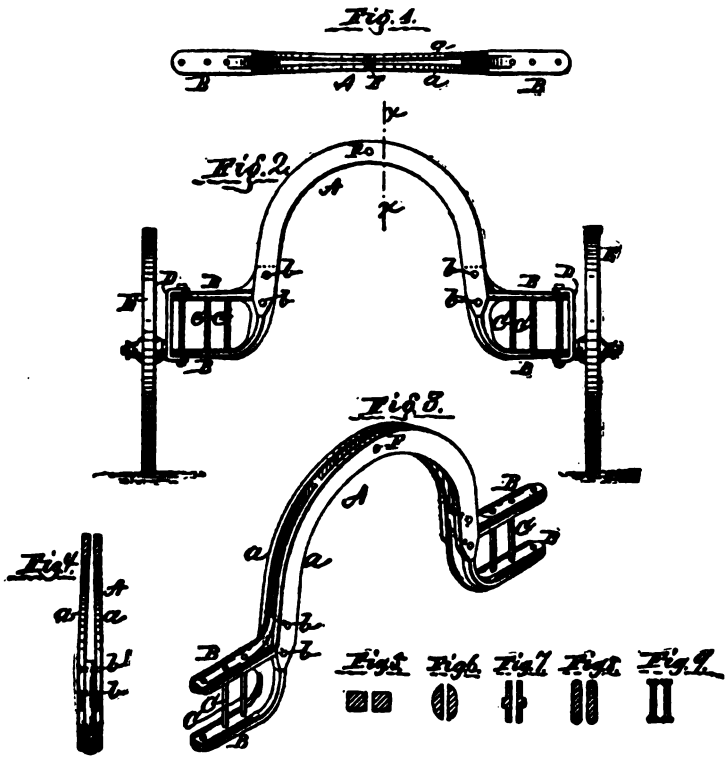

Original.

"A is the axle, bowed or elevated at its central part. B B are plates secured to the ends of the axle A. The ends of the plates B B are *turned* outward, forming *snugs* b b b b. b^1 b^1 are snugs projecting inward from the plates B B. C C are *triangular-shaped draft plates*, from which project snugs c c c c, corresponding with the snugs b b b b. D D are pins or bolts, passing through holes in the snugs c c and b b, and thereby pivoting the plates C C to the axle A. E E are the wheels. F F are the wheel spindles, their inner ends shouldered, threaded, and secured in slots e e in the lower ends of the plates C C by nuts f f. G G are eveners, pivoted near their centers in the forward ends of the plates C C. H H are bars, their forward ends pivoted to the inner ends of the eveners G G, and their rearward ends pivoted to the snugs b^1 b^1. I I are hooks on the outer ends of the eveners G G, to which the draft animals are attached."

Reissue.

"A represents the axle, formed as shown in the drawings, of an elevated central part, A, vertical side portions A^1 A^1, and *horizontal projections a a*, from each of the vertical side portions A^1. B B are draft plates, with projecting forward ends b, to which the draft animals *may be attached direct* or by *any suitable* device, and with an enlarged rear end, from which project lugs b^1 b^1, corresponding with the *projections a a* of the axle A, to which they are hinged by vertical bolts C, as plainly shown in the drawings. D D are the supporting wheels. E E are the wheel spindles, their inner ends shouldered, threaded and secured in slots e in the lower ends of the plates B by nuts e^1. G G are eveners, pivoted near their centers in the forward ends of the plates B. H H are bars, their forward ends pivoted to the inner ends of the eveners G G, and their rearward ends pivoted to lugs a^1 a^1, which project inwardly from the vertical parts A^1 of the axle. I I are hooks on the outer ends of the eveners G G, to which the draft animals are attached."

From this on, the original and reissue specifications are substantially alike, the description of figure 1 of the reissue closing with the words: "It will be evident that the draft plates B support and give direction to the course of the wheels, while the wheels in turn serve to support them.''

The first claim of the original is for:

"The axle A, having plates, B, hinged to the wheel-spindle plates C, so that the wheels

are retained in the line of progression when one is in advance of the other, as set forth."

The second claim of the reissue is for:

"The axle A, hinged to the wheel-spindle or draft plates B B, so that the wheels are retained in the line of progression *by the draft of the animals*, when one is in advance of the other, substantially as described and for the purpose specified."

[298] The third claim of the original is:

"The evener bars G G and bars H H, when combined and arranged to operate with the hinged axle A, plates C and wheels E E, substantially as and for the purpose specified."

And the sixth claim of the reissue:

"The evener bars, G and bars H, combined and arranged to operate with the hinged axle A, plates B, and wheels D, substantially as and for the purpose specified."

That purpose is stated in the second claim to be the retaining of the wheels "in the line of progression by the draft of the animals, when one is in advance of the other," and as this purpose can only be accomplished by the aid of the evener bars G G and bars HH, that is, not by the combination of the second claim alone, but only by carrying into it the eveners and bars of the sixth claim, it follows that the latter must be brought into the former by intendment.

In the original patent the mode of attachment of the team to the cultivator is stated to be by the hooks I I "on the *outer ends* of the *eveners* GG, to which the draft animals *are attached*," while the reissue patent contains these words: "B B are draft plates, with projecting forward ends *b*, to which the draft animals may be attached *direct*, or by any suitable device."

An examination of the machine discloses that the wheels are kept in the line of progression by the eveners G G and their connection; and when they are dispensed with, and the hitch made direct, the wheels follow the animals and may get out of the line of progression.

As it is admitted that if the eveners are elements of the second claim, the effect of their omission and of hitching directly to the draft plates instead of to the eveners would be to enlarge the claim, and as in our judgment this is precisely what was done, the reissue must be held to have been illegally expanded.

It may also be observed that the connecting bow in the original patent, called an axle, consists of a central curved portion with a plate attached to each end, and two spindle plates—a combination of five parts. In the reissue the [299] axle and side plates are treated as one part, making with the two spindle draft plates three parts. There is, therefore, an omission in the latter combination which tends, by reducing the number of elements, to render its scope less narrow than that of the original.

As we have seen, the original first claim was for "the axle A, *having plates B*, hinged to the wheel spindle plates C, so that the wheels are retained in the line of progression when one is in advance of the other, as set forth."

The second claim of the reissue is for the "axle A hinged to the wheel spindle or draft plates BB, so that the wheels are retained in the line of progression *by the draft of the animals*, when one is in advance of the other, substantially as described, and for the purpose specified."

The axle having plates as described hinged to wheel spindle plates, is not identical with an axle omitting the first named plates, or having them so affixed as to become a constituent part thereof. The omission of the plates B and the addition of the direct draft are significant and material changes; and it is well settled that a reissue can only be granted for the same invention intended to be embraced by the original patent; and the specification cannot be substantially changed, either by the addition of new matter or the omission of important particulars, so as to enlarge the invention as intended to be originally claimed.

Passing to the question of infringement, it will be found that when the extent of the invention is determined, as it must be, by reference to the state of the art, the appellee's machine does not infringe in respect to those parts of the claim which can be held to have been unanticipated. It is alleged in the bill that in *Pattee* v. *Moline Plow Company*, in the United States Circuit Court for the Northern District of Illinois the court sustained the validity of said reissued letters patent No. 6080. Upon referring to that case (10 Biss, 377 and 9 Fed. Rep. 821) we find that *Judge* Blodgett held: "From the proof in this case it is quite clear to me that Pattee was not the first to conceive and embody in a working machine the idea of a tongueless straddle-row cultivator. The first machine shown in the proof which embodies [300] this idea is that patented by Isaac Constant, in November, 1851. It is a tongueless straddle-row cultivator, with all the elements for a working machine of that description and so arranged as to be what may be called in this art self sustaining, that is, it will stand upon its own supports. This was also done by Arnton Smith in January, 1855; by Whitely in 1860 to 1865; by E. W. Vangundy in February, 1864; by Pratt in October, 1864; and by Adam Young in November, 1866. All these show cultivators constructed without a tongue, with two plow beams held together by a yoke, each plow drawn by its own draft animal and operating independently of the other."

The Constant patent here referred to is in this record and shows a tongueless cultivator, in which the inside beams move vertically and laterally independent of each other, and each draft animal is hitched to its own side, while the side supports are beams to which two cultivator shovels are applied.

The Smith machine is a tongueless cultivator, in which two mold-board plows are connected together by a bar in front, not arched up in the center. A horse is to be attached to each plow, and the coupling so made as to allow an independent motion.

Of the Pratt patent *Judge* Blodgett says that Pattee's arched and jointed axle is fully anticipated by it in form of construction, function and mode of operation. This Pratt patent shows a flexible, parallel, tongueless cultivator, in which each horse pulls his own side of the machine.

The patent to William Tasker of 1859 has an axle hinged to draft or spindle arms, having projecting bars so coupled that the wheels are

retained in the line of progression by the draft of the animals. Tasker's fifth claim is: "The connecting of the wheel stumps to a vertical spindle or spindles, capable of turning freely in vertical collar bearings or sockets, as hereinbefore described." The description as to this part of his machine is thus: "J J are adjustable stumps for carrying the running wheels K K. These stumps pass through the overhanging lugs L L, formed at the top and bottom of each of the round spindles M M which are con-
[301] tained in the vertical sockets N N (one of which is shewn in section in figure 3) of the cast-iron frame C, and are free to turn therein; thereby enabling the stump of each wheel to swivel or lock round when turning the plow, as shown by the dotted lines in figure 2."

If Pattee's claim were merely for a combination of an axle, having an elevated central portion, with the wheel spindles, so that the draft of the team controls the direction of the wheels, the Tasker patent anticipates it, but the combination differs from that in the arrangement by which the evener bars are carried inwardly so as to connect with the arch or central part of the axle, making the axle a part of the evener so combined, and thus maintaining the parallelism of the wheels.

Appellee's machine does not have "the wheel spindles or draft plates" of the patent, nor the axle A with side plates B, but it uses the Pratt axle of 1864. Nor in appellee's machine is the parallelism of the wheels maintained by the draft devices, nor are they retained in the line of progression by the draft of the animals, but turn as the animals may pull. The beam-frames of appellee's machine have nothing to do with the wheel spindle. The snugs of Pattee's have nothing to do with the plow beams. The differences are so great that interchangeability of the parts of the two machines would be utterly out of the question.

In our judgment the reissue if valid, when limited to what alone could be claimed as new, is not infringed by appellee.

The first and second claims of the Kendall patent, No. 174,684, are as follows:

"1. The runners E, arranged to support the axle of the tongueless cultivator, with the plows D suspended therefrom, in manner substantially as described.

"2. The combination of the runners E, plows D, hook rods F, and axle A of a tongueless cultivator, substantially as and for the purpose specified."

As stated on behalf of appellant, "The second claim in said patent is a claim for substantially the same combination as recited in the first claim, but differently worded from the first claim," and as the hang-up devices are necessary for the suspension of the plows, the two claims may be treated as one.

[302] The invention is said in the specifications to consist of the use of runners attached to the truck frame or axle in such manner that they will not interfere with the operations of the machine when in use, and will act as supporting runners for the axle when the rear ends of the plows are elevated and suspended thereon; and, second, in the combination of hooks or rods for suspending the plows on the axle, with said axle and plows.

The drawings show the axle, the wheels, the draft plates, and the plows of an ordinary cultivator of the tongueless class. The runners, constituting as alleged the "main feature" of the improvement, are journaled on the outer ends of the spindles of the wheels, midway their lengths, and their forward ends curved inward, and secured to the draft plates by a threaded end and nut, while their rear ends are extended backward and downward and curved in such position that when the plows are in operation in the field and the axle upright, the rear ends of the runners will be above and free from the surface of the ground, and when the rear ends of the plows are elevated and suspended by any means from the axle, the rear ends of the runners will rest upon the ground and support the axle from being pulled backward and downward.

In short, as in the machines with a tongue, the plows are raised up and suspended from the tongue to keep them off the ground, so in the tongueless machine the plows are raised up and hooked on to the axle, and, to prevent their falling backward with the axle, runners are provided, connected with the axle and the hitching arm of the machine, which sustain the axle when the plows are hooked on, but are themselves raised from contact with the ground by the draft when the plows are in use.

The runners are described as "journaled on the outer ends of the spindles," but it is also stated that they "may be attached *rigidly* to any suitable part of the axle at one or more points of attachment, and extend backward in the same manner as described."

These runners, having the wheel spindle or axle for their fixed point of support, are necessarily rigid and unyielding, and work automat- [303]
ically, their rear ends being raised by the pulling of the team and lowered by the weight of the plow beams when placed on the hooks.

The rigidity of the runners and the resulting automatic action are the essential characteristics of the patent; for tongueless wheel cultivators with runners to keep the plows off the ground were common and well known in the art when it was issued.

It is contended by appellant that the true state of the art is contained in the prior patents of Poling of 1872 and Robertson of 1875; and while many others are exhibited, an examination of these will, we think, sufficiently establish the conclusion just expressed.

Poling's patent is for a tongueless cultivator, provided with runners, which are placed under the beams by hand, when the plows are being transported, and which are taken out and carried on the beams when the plows are in operation.

Robertson's patent is for a tongueless cultivator, with draft plates, wheels, and beams, and runners pivoted to the beams near the axle, and arranged with set screws to lock the plows up and let them down. It is immaterial to the operation of the runners whether they act directly on the plow beams or through the axle.

In appellee's machine the runner is arranged upon the end of an arm which projects backward from the axle. When the plows are in use the runner is turned up out of the way. When the runners are used the plows are raised and the runners prevented from turning up by a catch on the arm.

This machine does not contain runners constructed as the Kendall runners are, in the rigid form, and operated by the draft of the team to keep them off, or by the weight of the plows to keep them on, the ground; and so lacks the distinctive features of the Kendall patent.

It is not automatic, but requires manipulation every time the use is changed.

When the runner is put in use its rear extension is turned down by hand, and a locking-dog, hung within a slot in the arm, turned into position. When the runner is not to be used, [304] it must be moved so as to release the dog and permit it to be thrown up; and the arm is then thrown upward and forward, the dog being allowed to drop so as to afford a support for the runner.

This jointed runner with a lock cannot be held to be the Kendall rigid bar.

We agree with the circuit court that there is no infringement.

Patent No. 187,899 is described as being for a new and improved mode of constructing the arch or central and main part of straddle-row cultivator beam-yokes or axles, and of connecting the side parts thereto, and the invention as consisting "in constructing said arch of curved adjacent bars of iron or steel, to the ends of which may be attached, by riveting, the cast-iron parts for securing thereto the plows and wheels, and which may be strengthened by the use of stiffening bolts."

The use of parallel bars is exceedingly common, and so far as the attachment of the bars to the end plates is concerned there is nothing new in that method.

The Burnham and Lathrop patent of 1866 shows a yoke connecting the plow beams together, made with two parallel bars with end castings, put together with one bolt near the rear ends of the beams instead of with two bolts at the front ends, as in appellant's machine. The specification says: "The two frames G G are connected by an arched or semi-circular yoke H^x, the ends of which are pivoted to bars I I, which are secured on the tops of the plow frames G G by pivots *e*, the bars being allowed to turn freely on the pivots *e*."

The Louden patent of 1876 has an arched axle of tubular wrought iron, gas pipe being stated to be very suitable, having end castings attached rigidly or cast thereon.

The Barr patent of 1872, and the Miller patent of the same year, show arched axles or beam-yokes of two or more parts.

The Perkins patent of the same year shows the beams themselves made of parallel curved bars.

What is sought in all these patents is strength and lightness, together with cheapness and durability, but they are simply modes of construction. And that described in this patent [305] embraces nothing that is not old and really nothing that is patentable, that is, which involves invention rather than mechanical skill.

Upon the whole case we are satisfied with the conclusions reached by the Circuit Court; and its decree is, therefore, affirmed.

WILLIAM PINKERTON, *Plff. in Err.*, [346]
v.
EPIFANIO LEDOUX.

(See S. C. Reporter's ed. 346-355.)

Location of grant of land—question of fact—description—delivery of possession—writ of possession—surveyor-general's report.

1. In order to locate a grant of land, there must be evidence to show that the place of location agrees with the description in the grant, and that evidence is for the jury.
2. The judge may properly explain to the jury the effect of different portions of the evidence; and if the jury find a verdict against plain evidence, their verdict will be set aside.
3. If the description contained in the petition and grant differs from that contained in the act of possession, the former must prevail. If the officer assigned to deliver possession does not follow the grant, his acts are not valid.
4. Where the original grant does not locate the subject of the grant, as where a certain number of square leagues is granted to be located within a certain district, the delivery of possession within the district renders the title complete, and defines the location of the grant.
5. In an action of ejectment based on a Mexican grant if, from the description and words in the petition and writ of possession, the jury could not definitely locate the boundaries of the grant, they must find for the defendant.
6. The surveyor-general's report is no evidence of title or right to possession; until his report was confirmed by Congress it has no effect to establish the boundaries of the grant.

[No. 114.]

Argued Dec. 7, 1888. *Decided Feb. 4, 1889.*

IN ERROR to the Supreme Court of the Territory of New Mexico, to review a judgment for defendant in an action of ejectment to recover possession of lands in New Mexico. *Affirmed.*

The facts are stated in the opinion.

Mr. **F. W. Clancy,** for plaintiff in error:

There was positive evidence on behalf of plaintiff that the land in question was within the Nolan grant. In such a state of facts, plaintiff was clearly entitled to a decision in his favor.

Winchell v. *Hicks*, 18 N. Y. 558.

The juridical possession was conclusive as to the boundaries and extent of the land granted.

U. S. v. *Pico*, 72 U. S. 5 Wall. 539 (18: 696); *Graham* v. *U. S.* 71 U. S. 4 Wall. 260 (18: 333); *Van Reynegan* v. *Bolton*, 95 U. S. 35 (24: 351); *Leese* v. *Clark*, 18 Cal. 567-574; *Page* v. *Scheibel*, 11 Mo. 187.

Messrs. **Henry E. Davis** and *James E. Padgett* for defendant in error.

Mr. Justice **Bradley,** delivered the opinion of the court:

This is an action of ejectment brought by Pinkerton, the plaintiff in error, to recover from the defendants, Julian Ledoux and Epifanio Ledoux, the possession of a quarter section of land claimed to be within the tract known as the Nolan grant in Colfax and Mora Counties in New Mexico, under which grant the [347] plaintiff claims title; and the main question in the case is, whether the Nolan grant extends far enough westerly and northerly to embrace

the lot in question. The action was commenced in July, 1881, in Colfax County, and was afterwards removed to Mora County. The property claimed is described in the declaration as follows, to wit: "that certain tract and parcel of land lying and being situated in the County of Colfax, in the Territory of New Mexico, and being a portion of that larger tract of land commonly known as and called the 'Nolan grant' (and which said grant was, on or about the eighteenth day of November, A. D. 1845, made by Manuel Armijo, then Governor of the Territory of New Mexico, to Gervacio Nolan and two others), being the same one hundred and sixty acres of land upon which the said defendants now reside and occupy, and upon which they have a dwelling house wherein the said defendants or one of them reside, situated on the northwest third of the above mentioned grant and bounded upon all sides by lands of the plaintiff."

The defendants pleaded not guilty and three special pleas. *First*, title in themselves by virtue of an entry and a grant from the United States, under which they have erected and placed upon the premises certain valuable improvements, consisting of dwelling houses, barns, fences, ditches, etc., of the value of $5,000, which value they gave notice that they will prove at the trial if the plaintiff shall maintain his title. *Second*, that they built the valuable improvements on the land before the commencement of the action, and that the plaintiff cannot deprive them of possession until such improvements are paid for. *Third*, not guilty within ten years.

The plaintiff took issue on those pleas, and entered a *nolle prosequi* as to Julian Ledoux. On the trial of the cause the plaintiff gave in evidence, first, the original Nolan grant, consisting of the petition for a concession, dated November 15, 1845; the grant upon the same, indorsed thereon and dated Santa Fé, November 18, 1845; and the act of juridical possession, dated November 30, 1845. The petition was made by Gervacio Nolan, Juan Antonio Aragon, and Antonio Maria Lucero, soliciting a grant for a piece of land in the little cañon of [348] Red River, bounded "on the north by the possession of Messrs. Miranda and Beaubien; on the south one league in a direct line, including the Sapello River, according to its current; on the west another league from Red River and its current; and on the southeast the little hills of Santa Clara with their range to the little cañon of the Ocate." The grant was made as desired, with the boundaries and limits asked for. The act of juridical possession describes the boundaries as follows: "They are, on the north, the lands of Don Gaudalupe Miranda and Don Carlos Beaubien; on the south, one league south of the Sapello River, following the same range; on the east, one league east of the Red River, with the same range of the river; and on the west, the little cañon of Ocate and five hundred varas west of the little hills of Santa Clara in a direct line." No plat or desiño was shown to have been annexed to the act of juridical possession. If there had been one, it was not given in evidence.

It must be acknowledged that these descriptions are somewhat vague. It would seem that, from the northern boundary, adjoining Miranda and Beaubien (or the Maxwell grant), to the southern boundary along the Sapello River, the distance is about forty miles; and if the grant extends westerly from the Red River far enough to embrace the land in question, as claimed by the plaintiff, the general width is from twenty-one to twenty-five miles—the whole tract thus embracing an area of nearly 1,000 square miles; whilst if it is confined to one league west of the Red River, as would seem to be the meaning of the original petition and grant, the quantity would still be over 100 square miles.

The plaintiff then gave in evidence, without objection on the part of the defendant, the opinion of the Surveyor-General, dated July 10, 1860, reporting on the grant in question, and stating that he believed the documents of title to be genuine, and the grant to be good and valid, and that the land embraced within the boundaries set forth in the petition and juridical possession were severed from the public domain, and that the title therefor was vested in the heirs and legal representatives of Gervacio Nolan; he therefore approved said title, and transmitted it for the action of Congress, [341] in accordance with the 8th section of the Act of July 22, 1854, entitled "An Act to Establish the offices of Surveyor-General of New Mexico," etc. (10 Stat. at L. 308.) The Act says, "which report shall be laid before Congress for such action thereon as may be deemed just and proper, with a view to confirm *bona fide* grants, and give full effect to the Treaty of 1848 between the United States and Mexico." It does not appear that this title was ever approved or confirmed by Congress. The plaintiff then offered in evidence (but the court rejected) the petition of the claimants of the grant, addressed to the Surveyor-General, in order to show what boundaries they claimed on that occasion. It is unnecessary to recite the contents of this petition, as we think the court rightly rejected it. The Surveyor-General, when referring in his report to the boundaries set forth in the petition and juridical possession, evidently referred to the boundaries contained in the original petition of Nolan and his associates for the grant, and not to the petition addressed to himself.

The plaintiff then introduced in evidence a map from the Surveyor-General's office, which was not admitted as evidence of the boundaries of the grant in question, nor to show any survey thereof, but only to inform the jury as to the location and position of natural objects and course of streams referred to in other documents. The material part of the map was as follows, to wit: (See p. 708.)

It shows the Nolan grant to be about forty miles in length, north and south, and twenty-five miles in width, extending across the whole of Mora County, and five or six miles into Colfax County on the north and San Miguel County on the south. In the northwestern part of the Nolan grant, as marked on the map, on Ocate Creek, some sixteen miles west of Red River, is shown a ranch. On the west side of the grant about midway between the north and south bounds, are situated the little hills of Santa Clara. No proof was offered with regard to the authenticity or accuracy of this map, except that it was brought from the Surveyor-General's office. Very little testimony

was offered. Mary McKellar testified that she lived in Colfax County in the ranch noted on

[350]

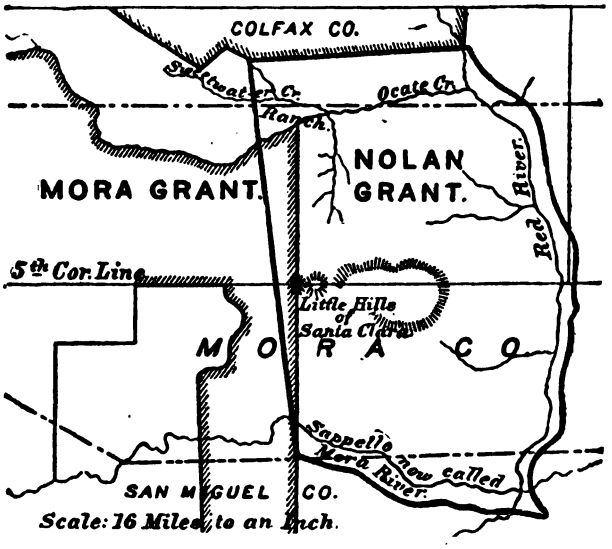

the map; that Ledoux's place (the land in question) was about a mile and a half to the northeast of her ranch, two or three miles south of Beaubien and Miranda's grant; that she knew where the stones were put by Mr. Shaw, as the western boundary of the Nolan grant. He was the surveyor sent up from Santa Fé to survey the land. Mr. Ledoux's house is to the east of that line, as surveyed by Mr. Shaw. [351] She also testified about the little hills of Santa Clara, and the location of the canoncito of the Ocate. Ledoux was examined to show that he was in possession of the lot claimed in the suit. The plaintiff was examined to identify the locality of the little hills of Santa Clara, and the canoncito of the Ocate, and where a line would run, beginning 500 varas west of the hills and running a straight line through the canoncito, and that the defendant lives to the east of that line. He did not know how many canoncitos were on the Ocate. There might be one near Red River; he never was there. He also located the county line between Mora and Colfax Counties. He had only known the country since 1875.

The defendant's counsel admitted that the plaintiff had acquired all the title of the original grantees, in and to the western half of the grant to the north of the Santa Clara hills. The defendant also introduced in evidence a map to show the various localities, position of natural objects, streams, etc., which showed substantially the same state of facts as the map introduced by the plaintiff. This was all the evidence in the cause.

The plaintiff then requested the court to instruct the jury as follows:

"That when a claim to a Spanish or Mexican grant has been favorably reported by the Surveyor-General of New Mexico, as the one here in question has been, the grantees or their heirs or assigns, are entitled to the absolute and exclusive possession of the land embraced within the limits of such grant; and in this case it is admitted that the plaintiff has all the right, title and interest of the original grantees to all that portion of said grant north of an east-and-west line running through the serritos de Santa Clara and west of a northwest and southeast line half way between the east and west boundaries of said grant."

And the court refused to give said instruction, and the plaintiff excepted.

We think the refusal was right. The Surveyor-General's report is no evidence of title or right to possession. His duties were prescribed by the Act of July 22, 1854, before referred to, and consisted merely in making inquiries and reporting to Congress for its action. If Congress confirmed a title reported favorably by him it became a valid title; if not, not. So with regard to the boundaries of a grant; until his report was confirmed by Congress, it had no effect to establish such boundaries, or anything else subservient to the title. [352]

The judge charged the jury that they must be satisfied from a preponderance of evidence that the defendant was within the boundaries petitioned for by Nolan, and into which he was inducted by the writ of possession, and if not so satisfied, they must find the defendant not guilty; that they must determine what the boundaries are from the words used in the petition and in the writ of possession; that if, from the description thus given, and from the extraneous evidence furnished by plaintiff, they were not convinced that the defendant was upon the land petitioned for and given by writ of possession to said Nolan, they must find defendant not guilty. If, upon the other hand, they were satisfied from all the evidence that the defendant was upon said land, they must find him guilty.

The judge then compared the words of boundary and description contained in the petition with those contained in the writ or act of possession, and added:

"If, upon comparing these descriptions, you

cannot make them agree, you must give the greater weight to the words and descriptions of the petition, for the petition must control the writ. In other words, the writ of possession must conform to the petition, for the grant was made according to the boundaries prayed for in the petition. You would not be justified in going 500 varas west of Los Serritos de Santa Clara for the western boundary of the grant, unless you find some authority for doing so in the words and descriptions of the petition. If, from the descriptions and words in the petition and writ of possession, you find yourself unable definitely to locate the boundaries of the grant, you must find defendant not guilty."

Then, at the request of the plaintiff, the judge charged: "2. That if they believe from the evidence that the land of which the defendant is in possession is within the limits of the [353] grant, which has been favorably reported by the Surveyor-General, they must find the defendant guilty."

He then charged as follows: "3. The plaintiff can only recover, if at all, on the strength of his own title or right of possession, and not on the defects of any title or right of possession of defendant.

"4. The plaintiff must establish his right to the possession of the land described in the petition or declaration, by competent evidence, in order for him to recover.

"5. In order to find the defendant guilty, you must find that the defendant did enter upon the land described in the petition or declaration; that the same is within the boundaries of the portion of the grant claimed by plaintiff, and that the defendant was, at the time this suit was instituted, in possession of the same wrongfully, withholding and detaining the same from the plaintiff."

The plaintiff excepted to the giving of each of said instructions, with the exception of the one numbered 2.

The jury, under this charge, rendered a verdict for the defendant, and judgment was entered accordingly; whereupon the plaintiff brought this writ of error. The assignment of errors corresponds to the exceptions. The plaintiff in error, in his brief, discusses two points upon which he insists upon a reversal of the judgment: 1. That there is nothing in the evidence to support the verdict. 2. That the instructions of the court did not properly submit to the jury the only point to be determined, to wit: Was the defendant within the boundaries of the portion of the grant claimed by the plaintiff?

We do not see how the judge who tried the cause could have more clearly stated, than he did in his charge, the real question to be determined by the jury, namely: the question whether the land in dispute was included within the boundaries of the grant, as applied to and sought for, in the actual condition of the country, its surface and mountains and streams. In order to locate a grant of land upon the surface of the earth there must be evidence to show that the place of location agrees with the [354] description of the grant, and that evidence is for the jury. The plaintiff alleges that it was error in the judge to leave this question to the jury. We think not. The judge may properly explain to the jury the effect of different portions of the evidence; and, of course, if the jury find a verdict against plain evidence, their verdict will be set aside.

The plaintiff complains, however, that the judge laid down an erroneous rule in charging that if the description contained in the petition and grant differed from that contained in the act of possession, the former must prevail, because it was the grant which conferred title. We think there was no error in this charge. If the officer assigned to deliver possession does not follow the grant his acts are not valid.

Where the original grant does not locate the subject of the grant, as where a certain number of square leagues is granted to be located within a certain district, the delivery of possession within the district renders the title complete, and defines the location of the grant.

The cases referred to by the plaintiff were grants of specific ranches, plantations or places having well known names, and the boundaries designated in the acts of possession ascertained their actual extent and limits, and hence were controlling when the question of title arose. "The juridical possession was conclusive as to the boundaries and extent of the land granted." *U. S.* v. *Pico*, 72 U. S. 5 Wall. 536, 540 [18: 695, 696].

The instruction given, that if from the descriptions and words in the petition and writ of possession the jury could not definitely locate the boundaries of the grant, they must find for the defendant, is supported by several explicit authorities. In *Carpentier* v. *Montgomery*, 80 U. S. 13 Wall. 480 [20:698], it was held that where one of the boundaries was so uncertain that it could not be defined or designated, the grant was void. The same rule was followed in *Scull* v. *United States*, 98 U. S. 410 [25: 164], where the description was so vague that, as sought to be interpreted by the claimant, it would embrace over seven millions of acres; and it was evident to the court that the surveyor was never actually on the ground, and was mistaken as to the locality of the natural objects on which he relied for description. The claim was rejected for uncertainty of description.

We see nothing in the charge of which the [355] plaintiff can properly complain.

This case seems to have been very perfunctorily tried and discussed. There is a question which may be entitled to much consideration, whether the Nolan title has any validity at all without confirmation by Congress. The Act of July 22, 1854, before referred to, seems to imply that this was necessary. There is also another Act of Congress which may have a bearing on the case. We refer to the Act of July 1, 1870 (16 Stat. at L. 646), by which another grant to Nolan was confirmed to the extent of eleven leagues. After various provisions with regard to the exterior lines of those eleven leagues, the fourth section declares "that upon the adjustment of said claim of the heirs of Gervacio Nolan, according to the provisions of this Act, it shall be the duty of the surveyor-general of the district to furnish properly approved plats to said claimants, etc.; *Provided*, That when said lands are so confirmed, surveyed, and patented, they shall be held and taken to be in full satisfaction of all further claims or demands against the United States."

Whether this provision was not intended to affect the entire claim of Nolan for any grant of lands in New Mexico may be a serious question. *Without expressing any opinion on the subject, it suffices to say that we see no error in the judgment of the Supreme Court of New Mexico, and it is therefore affirmed.*

---

[381] UNITED STATES, *Plff. in Err.*,

v.

DENNIS CORWIN ET AL.

(See S. C. Reporter's ed. 381-386.)

Demand for fulfillment of contract, when necessary—sufficiency of—official communication, as evidence.

1. In an action by the United States upon a bond to secure the performance of a contract to deliver such quantity of oats as might be required, not exceeding a specified amount, the burden of proof is upon the plaintiff to show a demand for the performance of the contract, and a failure or refusal to perform.

2. Letters written by the quartermaster for authority to purchase oats, because, as was alleged therein, the contractor had failed to deliver the oats under his contract, and authority granted by the adjutant-general to make such purchases, and the fact that they were made, are not evidence of a demand upon the contractor, nor of such default on his part as to give the United States a cause of action against him and his sureties.

3. Incompetent and irrelevant evidence cannot be converted into competent and relevant evidence simply because it is contained in an official communication.

[No. 123.]

Argued Dec. 12, 1888. Decided Feb. 4, 1889.

IN ERROR to the Circuit Court of the United States for the Western District of Texas, to review a judgment in favor of defendants in an action against sureties in bonds for the faithful performance of a contract. *Affirmed.*

The facts are stated in the opinion.

Mr. **Wm. A. Maury,** *Assist. Atty-Gen.*, for plaintiff in error.

(No counsel appeared for defendants in error.)

[382] *Mr. Justice* **Lamar** delivered the opinion of the court:

On the 17th of November, 1883, the plaintiffs in error brought suit in the Circuit Court of the United States for the Western District of Texas against the defendants in error, Dennis Corwin and John Cardwell, as sureties in two bonds, one in the penal sum of $3,000, and the other, $2,150, given by one Edwin P. Phillips to secure the faithful performance of two contracts, dated May 20, 1881, between Phillips and these plaintiffs. Phillips, being without the jurisdiction of that court, was not sued. By one of these contracts Phillips agreed to furnish to the quartermaster's department, United States Army, at the military station of San Antonio, Texas, "such quantity as may be required, not exceeding in all 1,000,000 pounds, of good merchantable oats, . . . at a stipulated price; the said oats to be furnished and delivered as may be required for the wants of the said station, between the first day of July, 1881, and the 18th day of July, 1882, in such quantities and at such times as the receiving officer may require;" and by the second contract he agreed to furnish to the same authorities, at the same place, such quantity as may be required, not exceeding in all 1,000,000 pounds, of good merchantable corn, at a stipulated price, between July 1, 1881, and June 30, 1882, upon like terms, as to quantity and time of delivery, as in the case of the oats.

The petition, after setting out the material parts of both of these contracts, and also of the bonds, alleged that Phillips "wholly failed, refused and neglected to carry out any one or all of his stipulations in said agreements;" that, as a result of such failure on his part, the plaintiffs were compelled to, and did, go into the open market and purchase large amounts of both kinds of grain at a much higher price than was stipulated in said contracts; and that plaintiffs were thus subjected to a loss of $11,564.55, for which sum, or so much thereof as did not exceed the amounts named as penalties in the bonds, together with interest and costs, etc., they prayed judgment. [383]

Each of the defendants below demurred to the petition, and, at the same time, traversed its allegations.

August 24, 1884, a formal stipulation was filed, waiving a jury and submitting all matters of law and fact to the court. On the following day an amendment to the petition was filed, alleging that on the 8th day of July, 1881, demand was made on Phillips, under the contract, for the delivery of 150,000 pounds of corn and a like quantity of oats. Issue being joined, the United States introduced their evidence, which was wholly documentary, and consisted of transcripts of various original papers deposited in the Treasury Department, and which, it was claimed, was relevant to the case. The defendants in error offered no evidence at all. On the third of September, 1885, the court overruled the demurrers to the petition, and upon consideration of the case upon its merits rendered judgment in favor of the defendants in error, upon the ground that, under the contracts sued on, a demand upon Phillips for their performance was a condition precedent to the right of action on the bonds, and that there had been no legal evidence submitted showing that any demand ever had been made. From this judgment the United States sued out the writ of error which brings the case here.

The burden of proof was upon the United States to show that a demand had been made upon Phillips for the performance of each of his said agreements, and to show his failure and refusal to so perform them.

The evidence submitted by the United States to establish this demand and refusal, consisted of several letters, of different dates, written by the quartermaster in charge of the depot at San Antonio to the Chief Quartermaster of the Department of Texas, for authority to purchase certain stated amounts of oats in open market, because (as was alleged therein) Phillips had failed to make deliveries under his contract; all

of which letters were referred by the last named officer to the adjutant-general, with a recommendation that such authority be granted. The adjutant-general approved these requests, [384] and the purchases were accordingly made. These letters were substantially alike, differing only as to dates and amounts of oats desired, one of which, including indorsements, is as follows:

"Office Depot Quartermaster, U. S. Army,
"San Antonio, Texas, Aug. 2, 1881.
"Chief Quartermaster, Department of Texas,
San Antonio.

"Sir: I respectfully request authority to purchase 40,000 lbs. of oats, in open market, the contractor, Mr. E. P. Phillips, having failed to make deliveries under his contract.
"Very respectfully, your obedient servant,
"L. E. CAMPBELL,
"Capt. & A. Q. M., U. S. A., Depot Q'r M'r."

(First indorsement.)

"H'dq'rs, Dep't of Texas,
"Office of Chief Quartermaster,
"San Antonio, Texas, Aug. 2, 1881.

"Respectfully referred to the Adj't-General, Department of Texas, recommending approval of this request in accordance with article 1 of the contract. Mr. Phillips, after having had due notice by requisition from the depot quartermaster to furnish certain quantities of grain, has so far failed to make any delivery, and the amount of grain for which authority is here requested to purchase in open market as absolutely needed for issue to the public and private animals pertaining to this station, and the San Antonio depot, and will last about ten days.
"(Sig'd) WM. B. HUGHES,
"Major & Chief Q'r'master."

(Second indorsement.)

"Headquarters Department of Texas,
"San Antonio, Aug. 3, 1881.

"Respectfully referred by the Commanding General to the Chief Quartermaster of the department approved.
"(S'g'd) THOMAS M. VINCENT,
Adjutant-General.

[385] (Third indorsement.)

"Headq'rs, Depot of Texas,
"Office of Chief Quartermaster,
"San Antonio, Texas, Aug. 3, '81.

"Respectfully referred to the Depot Quartermaster, San Antonio, inviting attention to preceding indorsement.
"(S'g'd) W. B. HUGHES,
"Major & Chief Quartermaster."

We agree with the circuit court that the transcript does not present any legal evidence of a demand upon the contractor, nor of any such default on his part, as to give the United States a cause of action against him and his sureties. The order of the receiving officer at San Antonio, requiring the contractor to deliver the oats in the quantity stated and at the time specified, should have been produced, or its nonproduction accounted for. The letters of the acting quartermaster, Captain Campbell, applying for authority to purchase oats, and the recommendation by Major Hughes that the application be granted, only prove the necessity and object for such purchase. The assertion by Major Hughes that the contractor, though duly notified by requisition, had failed to comply with his contract, is unsustained by any evidence of any kind. No such requisition can be found among the papers, nor is any reason given for its nonproduction. Neither is it shown, except by the bare assertion referred to, that the requisition ever reached the contractor.

It is contended by the counsel for the Government, that this assertion, being in the official communication of the Chief Quartermaster of the Department of Texas, is itself sufficient and competent evidence of the fact. We do not think that the authorities cited support the proposition. They present applications in various instances of the well established rule that official reports and certificates made contemporaneously with the facts stated, and in the regular course of official duty, by an officer having personal knowledge of them, are admissible for the purpose of proving such facts. Manifestly the design and meaning of this rule is not to [386] convert incompetent and irrelevant evidence into competent and relevant evidence simply because it is contained in an official communication. Had the officer been testifying under oath, such an assertion would have been excluded as inadmissible, upon the ground that the statement itself implied the existence of primary and more original and explicit sources of information. *Clifton* v. *U. S.* 45 U. S. 4 How. 242, 247 [11:957]; Taylor, Ev. §§ 391, 394; Greenl. Ev. §§ 82, 84. The courts hold this rule, which has been invoked, to be limited to only such statements in official documents as the officers are bound to make in the regular course of official duty. The statement of extraneous or independent circumstances, however naturally they may be deemed to have a place in the narrative, is no proof of such circumstances, and is therefore rejected. Taylor, Ev. § 705; *U. S.* v. *Buford*, 28 U. S. 3 Pet. 12 [7:585].

It results from what we have said that there was no evidence submitted showing a demand by the United States under the first contract, and a failure and refusal by Phillips to perform it. As to the contract for supplying corn, it is admitted by the United States that their evidence in support of their claim is not so strong as in the case of the contract for supplying oats. The only evidence touching the contract to supply corn was certain vouchers for corn purchased outside the contract, all dated in the latter part of the year 1881 and the early part of 1882. In the language of the counsel for plaintiffs in error, "We find no correspondence, nor any other form of documentary evidence, tending to show that the demand for performance required by the contract to supply corn had been made by the Government."

The judgment of the Circuit Court is affirmed.

355] SARAH WALWORTH, EXTX., ET AL., *Appts.*, *v.* JOSEPH L. HARRIS ET AL.

(See S. C. Reporter's ed. 355-366.)

Arkansas lease—lien for rent—not enforceable in Louisiana—law of one State, when not enforced in another State.

1. Where, in a lease in Arkansas, it is provided that the lessor shall have his lien on the crop for the payment of his rent, the lien referred to is the lien given by the Statute of Arkansas.
2. *Held*, upon the evidence in this case, that it is not established that defendants, to whom the crop had been shipped at New Orleans, knew or had notice of any lien in favor of the plaintiff for such rent; *held*, further, that when defendants received the crop in New Orleans, they received it under such rights and limitations as the Laws of Louisiana conferred upon them in that regard.
3. Although a court of one State will give effect to the law of domicil of another State, yet this is a mere principle of comity between the courts, which must give way when the statutes of a country where property is situated, or the established policy of its laws, prescribe to its court a different rule.
4. If a person sends his property within a jurisdiction different from that where he resides, he impliedly submits it to the rules and regulations enforced in the country where he places it.

[No. 148.]

Submitted Jan. 7, 1889. Decided Feb. 4, 1889.

APPEAL from a decree of the Circuit Court of the United States for the Eastern District of Arkansas, dismissing a suit in equity to enjoin the sale of property and to enforce a lien thereon. *Affirmed.*

The facts are stated in the opinion.

Messrs. **J. S. Whitaker** and **D. H. Reynolds**, for appellants:

By the Laws of Arkansas the landlord's lien is a charge upon the crop for the rent; and if the purchaser or mortgagee has notice of the lien for rent, he takes subject to the lien. Knowledge of the tenancy is sufficient notice to the purchaser or mortgagee of the lien for rent.

Smith v. *Meyer*, 25 Ark. 609; *Volmer* v. *Wharton*, 34 Ark. 691.

It is not necessary in Arkansas to record a lease to give a landlord a lien on the crop for rent.

Smith v. *Meyer*, 25 Ark. 611.

The landlord may pursue the produce of the rented premises, or the proceeds thereof in the hands of parties having notice of the lien, at any time within the six months.

Meyer v. *Bloom*, 37 Ark. 43; *Buck* v. *Lee*, 36 Ark. 525; *Watson* v. *Johnson*, 33 Ark. 737; *King* v. *Blount*, 37 Ark. 115; *Halliday* v. *Hamilton*, 78 U. S. 11 Wall. 564 (20: 215); *Chaffe* v. *Heyner*, 31 La. Ann. 594.

Courts of justice have always expounded and executed contracts according to the laws of the place in which they are made; provided that law was not repugnant to the laws or policy of their own country.

Bank of Augusta v. *Earle*, 38 U. S. 13 Pet. 519 (10: 274); Story, Confl. L. § 38.

And where there is no such lien by the laws of the State to which the property goes, liens by the laws of the place from which the property comes will be enforced.

Whart. Confl. L. § 322.

As a general rule a personal contract, with attendant privileges and effects, when made in another State will be enforced in Louisiana, upon a movable, according to the *lex loci contractus.*

Tyree v. *Sands*, 24 La. Ann. 363.

In Louisiana the landlord has a privilege on the growing crop of the year to secure his rents.

Knox v. *Booth*, 19 La. Ann. 109; *Duplantier* v. *Wilkins*, 19 La. Ann. 112; R. S. of La. § 2873.

Notice of title brought home to a party supplies the place of registry of title.

Smith v. *Lambeth*, 15 La. Ann. 566; *Smith* v. *His Creditors*, 21 La. Ann. 241; *Meyer* v. *Simpson*, 21 La. Ann. 591; *Johnson* v. *Tacneau*, 23 La. Ann. 453.

Messrs. **Thomas J. Semmes** and **F. W. Compton**, for appellees:

Where, under the laws of one State, a lien on personal or movable property is created, either by contract or statute, and the property is afterwards moved into another State, the laws of the State where the lien was created have no extraterritorial force except by comity; and such comity is never extended by that other State when it would interfere with her own policy, or be detrimental to the rights of her own people.

Whart. Confl. L. §§ 297, 324; Story, Confl. L. 2d ed. §§ 323-325a, 524, 525; *Lee* v. *His Creditors*, 2 La. Ann. 599; *Merrick* v. *Avery*, 14 Ark. 370; *Clark* v. *Tarbell*, 58 N. H. 88; *McMahan* v. *Green*, 12 Ala. 71; *Provost* v. *Wilcox*, 17 Ohio, 359; *Harrison* v. *Sterry*, 9 U. S. 5 Cranch, 289 (3: 104); *Smith* v. *Union Bank*, 30 U. S. 5 Pet. 518 (8: 212); *Cammell* v. *Sewell*, 5 Hurl. & N. 728; *Bank of Chillicothe* v. *Dodge*, 8 Barb. 233; *Haven* v. *Foster*, 9 Pick. 112.

Mr. Justice **Miller** delivered the opinion of the court:

Sarah Walworth, the appellant in the present case, and John B. Walworth, who died pending the suit, said Sarah being now his executrix, with many other persons, are complainants in a bill in chancery, brought in the Circuit Court of the United States for the Eastern District of Arkansas, against Joseph L. Harris, John M. Parker, Z. T. Carlton, Sarah E. Bryan, and others. [356]

The object of the bill was to enjoin Carlton from proceeding to sell property conveyed to him by a deed of trust to secure certain debts due by the Bryans to J. L. Harris & Co. Lemuel C. Bryan and Joel E. Bryan were in business at Point Chicot, in Chicot County, Arkansas, under the partnership designation of L. C. Bryan & Bro. The main occupation was selling goods and buying cotton, but they also had several cotton plantations under their control. Among others they had leased from the heirs of Horace F. Walworth a farm at Point Chicot, for five years, at a rent of $5,500 a year, running from January 1, 1879, to January 1, 1884. Although the lease was executed in the name of Lemuel C. Bryan alone, it was for the benefit of the firm of Bryan & Bro., and it went into the general partnership business.

Joseph L. Harris and John M. Parker, trading as partners under the firm name of J. L.

Harris & Co., cotton brokers in the City of New Orleans, were the correspondents of Bryan & Bro., and to them the latter firm transmitted the cotton raised and purchased by them in Arkansas.

During the pendency of this lease, to wit, on December 9, 1881, Bryan & Bro., being indebted to Harris & Co., and desiring further accommodations and advancements from them, made a deed of trust to Z. T. Carlton of the County of Chicot, in Arkansas, in which they conveyed to him, as trustee, substantially all their property in the State of Arkansas, and all the cotton or other products raised or gathered during the year 1881 on the plantations and tracts of land described, with about 250 bales of cotton, in seed lint and bales, on the Point Chicot plantation, leased from the heirs [357] of Walworth. The purpose of this conveyance was declared to be to secure the payment of a debt of $35,000, evidenced by notes of Bryan & Bro., dated at New Orleans, La., December 9, 1881, drawn to the order of J. L. Harris & Co., and payable at their office in that city; also any advance in addition to said notes which Harris & Co. might make to Bryan & Bro., with various other agreements not material to be mentioned here.

The bill of the complainants, except the heirs of Walworth, consists of allegations that Harris & Co. had undertaken that out of the proceeds of the property conveyed by this deed of trust to Carlton these creditors should be paid various sums due to them. The heirs of Walworth in addition to this set up that, by virtue of the lease made between them and Bryan & Bro., they had a lien on the cotton raised each year on the Point Chicot plantation for the amount of the rent, $5,500 per annum; and further, that by virtue of the laws of Arkansas they had the landlord's lien for rent for the same sum on the cotton raised on the plantation. They also alleged that this cotton, the rent being unpaid, came to the hands of J. L. Harris & Co., who disposed of it, but that they were aware of the existence of such lien and were bound by it.

The circuit court, after a hearing on the bill, answer, replication, and evidence, dismissed it; and from that decree, only the heirs of Walworth take this appeal, and they only as to the question of their right to recover the rent for one year by virtue of a lien on the cotton which came to the hands of Harris & Co. from the Bryans. All the other questions, therefore, which were raised in the case, as it was originally heard and tried, are eliminated from its consideration in this court.

The lien here asserted seems to be founded upon expressions contained in the contract of lease and upon the Statute of Arkansas concerning the lien of a landlord. The only clause in the lease referring to a lien is the following: "And it is further understood that the lessor shall have his lien on the crop for the security and payment of his rent, as set forth in this lease." This reference to what is set forth in the lease means the amount of the rent and the time of its payment, and the language, that "The [358] lessor shall have his lien on the crop," evidently refers to the lien which the statute gives. So that, after all, it is the lien given by the Statute of Arkansas which is the one sought to be enforced here.

There is no question that, under the Laws of Arkansas, there existed a lien on some of the cotton transmitted by Bryan & Bro. to the defendants, Harris & Co., while that property remained in the State of Arkansas; and it is attempted to aid the argument in this case, which holds Harris & Co. liable for that lien on the cotton received by them, by the allegation that they knew that it came from the Point Chicot plantation, and knew the rent was unpaid, and, therefore, had knowledge of the existence of the lien. This knowledge, however, or even notice, is not sustained by the evidence.

The plaintiffs, in their bill, allege that Harris & Co. must have known of this lien, for two reasons: *first*, because they had paid the rent for two previous years to the heirs of Walworth; and *second*, because the lease between the heirs of Walworth and Bryan & Bro. had been in their hands for a short time, so that they must be held to have known its contents.

The bill is sworn to, and the answer is sworn to, with no waiver of an answer under oath, and according to chancery practice the answer of Joseph L. Harris, of the firm of J. L. Harris & Co., so far as it is responsive to these allegations, must be taken as evidence. In regard to the payment of the rent for the two years mentioned, he says that he simply paid it upon the order of Bryan & Bro., out of funds of theirs in his hands, as he would have paid any other order of theirs, and without any knowledge as to the nature, character or extent [361] of the lien, or that the rent was a lien on cotton in his hands. As regards the possession of the lease referred to, he says that they (Harris & Co.) did, at one time, in the year 1880, which is over a year previous to the crop on which the lien is now claimed, have this lease in their possession; that it was deposited with them by one Whitaker, who claimed to have an interest in the lease, as collateral security for a loan of $600; and that Whitaker having soon thereafter paid the same, it was returned to him without any further attention on their part.

This statement is confirmed by the answer, which is also under oath, of Joel E. Bryan, the surviving partner of Bryan & Bro., the other brother, Lemuel, having died before the trial. He says that L. C. Bryan & Bro. shipped of the cotton grown on the Point Chicot plantation in the year 1881, 467 bales, all of which was shipped to their own account to J. L. Harris & Co., to be by them sold as cotton factors, and the proceeds applied to the payment of advances made to their firm by Harris & Co., and, referring evidently to the question of the lien stated in the bill to be impressed on said cotton, says that if it was impressed with anything beside the shipping brand of his firm he did not see it; that the whole of said cotton belonged to the firm of Bryan & Bro., taken in the regular course of business, and that the last shipment, made on the 19th day of December, 1881, was sold a few days thereafter, and an account of sales rendered by Harris & Co.

There is no evidence from any quarter contradicting these sworn answers of J. L. Harris and Joel E. Bryan; and we therefore think that it is not established that Harris & Co. knew or had

notice of any lien in favor of the Walworth heirs for the rent upon the cotton received by them in the last days of these transactions.

It is also apparent, from all this testimony, that the cotton was shipped by Bryan & Bro. to Harris & Co., at New Orleans, as the property of the former, and was received and for the first time came under the control of the latter on landing at that place; and that they received it without any other obligation to account for the rent of the Point Chicot plantation, or any other lien upon it, except such as [362] would arise from the fact that such a lien existed in Arkansas as between Bryan & Bro. and the Walworth heirs.

The laws of the two States differ from each other on this subject. The Statute of Arkansas is found in the Revised Statutes of that State, of 1884, in the following words:

"Sec. 4453. Every landlord shall have a lien upon the crop grown upon the demised premises in any year for rent that shall accrue for such year, and such lien shall continue for six months after such rent shall become due and payable."

This was in force when these transactions took place.

There are also other provisions for the enforcement of this lien, which it is not necessary to embody here.

The Revised Code of Louisiana, arts. 2705 and 2709, limits the right of pledge of the lessor of real estate to the "movable effects of the lessee, which are found on the property leased," and "in the exercise of this right the lessor may seize the objects which are subject to it, before the lessee takes them away, or within fifteen days after they are taken away, if they continue to be the property of the lessee, and can be identified." By the Session Act of 1874, page 114, it is enacted as follows:

"Sec. 2. That when any merchant, factor, or other person has advanced money, property, or supplies on cotton, sugar, or other agricultural products, and the same has been consigned to him by ship, steamboat, vessel, railroad, or other carrier, the said agricultural products shall be pledged to the consignee thereof from the time the bill of lading thereof shall be put in the mail or put into the possession of the carrier for its transmission to the consignee."

It is not necessary to hold that the right of Harris & Co. to this cotton was vested in them on the giving of the bill of lading, or putting on board of a railroad or steamboat, but it is sufficient to hold that when they received it in New Orleans they received it under such rights and limitations as the Laws of Louisiana conferred upon them in that regard.

The question here presented of the conflict- [363] ing rights of parties claiming property under the laws of two different States, each of which sustains the claims of the party residing in it, is not a new one in this court. The case of *Green* v. *Van Buskirk*, 72 U. S. 5 Wall. 307 [18: 599], seems to decide the present one by the principles which it lays down and the analogy of the two cases in regard to the facts. That case was twice before this court for consideration.

It appeared that Bates, a citizen of the State of New York, was the owner of certain safes, which he sent from that State to the City of Chicago in the State of Illinois. On the third day of November, 1857, Bates executed and delivered, in the City of New York, to Van Buskirk and others, a chattel mortgage on these safes to secure an existing debt. On the 5th day of the same month, Green, also a creditor of Bates, sued out a writ of attachment in the proper court of Illinois, and caused it to be levied upon these safes in Chicago as the property of Bates. No record had been made at this time of the mortgage in the State of Illinois, nor had the possession of the property been delivered under it. Green recovered a judgment in the attachment suit, and had the safes sold in satisfaction of his debt. He was afterwards found in New York, of which State all three of the parties named were citizens, and was there sued by Van Buskirk for the value of the safes. Green pleaded the proceedings in the Illinois Courts in bar of the action, but this plea was overruled. The decision was affirmed by the Court of Appeals of New York, from which judgment Green took a writ of error to this court. It first came under consideration here on a motion to dismiss for want of jurisdiction; but it was held that the question of the right of Green to seize the property under his attachment must be determined by the Law of Illinois, where the property was when so seized, and not by the Law of New York, and that the court of appeals had refused to give to the judgment of the Illinois Court the full faith and credit to which it was entitled as a judicial proceeding of the courts of that State.

The inquiry of course involved more or less the question of the effect of those procedings, but as the case was only before the court on a motion to dismiss for want of jurisdiction, it had to come up afterwards to be heard on its [364] merits. On the *motion* the court considered very fully the much controverted principle as to the extraterritorial effect of laws affecting the title or liens upon the property in one State when that property was carried away or became the subject of litigation in another State; and while it was seen that in many cases it had been held that a court of one State would give effect to the law of domicil of another State, it was said:

"But after all, this is a mere principle of comity between the courts, which must give way when the statutes of the country where property is situated, or the established policy of its laws prescribe to its courts a different rule. The learned commentator, already referred to (Story on Conflict of Laws, § 390), in speaking of the Law in Louisiana, which gives paramount title to an attaching creditor over a transfer made in another State, which is the domicil of the owner of the property, says: 'No one can seriously doubt that it is competent for any State to adopt such a rule in its own legislation, since it has perfect jurisdiction over all property, personal as well as real, within its territorial limits. Nor can such a rule, made for the benefit of innocent purchasers and creditors, be deemed justly open to the reproach of being founded in a narrow or a selfish policy.' Again, he says: 'Every nation, having a right to dispose of all the property actually situated within it, has (as has

often been said) a right to protect itself and its citizens against the inequalities of foreign laws, which are injurious to their interests.'"

The court also cited with approval the following language (section 388) from the same authority:

"The municipal laws of a country have no force beyond its territorial limits, and when another government permits these to be carried into effect within her jurisdiction, she does so upon a principle of comity. In doing so, care must be taken that no injury is inflicted upon her own citizens, otherwise justice would be sacrificed to comity. . . If a person sends his property within a jurisdiction different from that where he resides, he impliedly submits it to the rules and regulations enforced in the country where he places it." See also *Olivier* v. *Townes*, 2 Mart. N. S. 93; 128 U. S. 489 [*ante*, 491]

[365] When the case of *Green* v. *Van Buskirk* again came before this court on its merits, 74 U. S. 7 Wall. 139 [19: 109], *Mr. Justice* Davis, in delivering the opinion, said, in reference to this question of the conflict of rights under the laws of different States, which were themselves in conflict:

"It is a vexed question on which learned courts have differed; but after all there is no absolute right to have such transfer respected; and it is only on a principle of comity that it is ever allowed. And this principle of comity always yields when the laws and policy of the State where the property is located has prescribed a different rule of transfer with that of the State where the owner lives."

The same principle is reasserted in *Hervey* v. *R. I. Locomotive Works*, 93 U. S. 664 [23: 1003].

That was a case where the Rhode Island company had delivered to Conant & Co., who were contractors on a railroad in Illinois, a locomotive engine, under an instrument in writing which this court construed to be a lease. By the Laws of Illinois, to which this engine was carried, such lease or title, whatever it may have been, which the locomotive company insisted that they had retained in the property, was of no avail as against subsequent creditors when the property was found in that State, unless it was properly recorded there. No such record being made of the instrument under which Conant & Co. held it, the engine was seized by attachment against that firm and sold to Hervey, the plaintiff in error in this court. In the following language, taken from the opinion in that case, the doctrine is reiterated that the question must be determined by the Laws of Illinois where the property was found and sold, and not by the Laws of Rhode Island where the lease or instrument of conveyance was made:

"It was decided by this court in *Green* v. *Van Buskirk*, 72 U. S. 5 Wall. 307 [18: 599], 74 U. S. 7 Wall. 139 [19: 109], that the liability of property to be sold under legal process, issuing from the courts of the State where it is situated, must be determined by the law there, rather than that of the jurisdiction where the owner lives. These decisions rest on the ground that every State has the right to regulate the transfer of property within its limits, and that whoever sends property to it impliedly submits to the regulations concerning its transfer [366] in force there, although a different rule of transfer prevails in the jurisdiction where he resides. He has no absolute right to have the transfer of property, lawful in that jurisdiction, respected in the courts of the State where it is found, and it is only on a principle of comity that it is ever allowed. But this principle yields when the laws and policy of the latter State conflict with those of the former."

The principle here asserted, which is clearly applicable to the case before us, is supported by reference to authorities in those opinions which we think are conclusive. At all events, the cases themselves are conclusive upon this court, and upon the rights of the parties to this suit.

The decree of the Circuit Court dismissing the bill is, therefore, *affirmed*.

THE MORLEY SEWING MACHINE COMPANY ET AL., *Appts.*, [263]

v.

CHARLES B. LANCASTER.

(See S. C. Reporter's ed. 263-290.)

Original inventor—patent for machine and process—when machine is an infringement—liberal construction—known equivalent.

1. Where an invention is one of a primary character, and the mechanical functions performed by the machine are, as a whole, entirely new, all subsequent machines which employ substantially the same means to accomplish the same result are infringements, although the subsequent machine may contain improvements in its separate mechanisms.

2. The doctrine thus applicable to a machine patent is of a kindred character with that applied, in this country and in England, to a patent for a process.

3. Where one was the first inventor of an automatic button-sewing machine and received a patent therefor, another machine is an infringement in which the sets of mechanisms of the prior machine are combined, provided each mechanism, individually considered, is a proper equivalent for the corresponding mechanism in the prior machine; and it makes no difference that the infringing machine is more simple and the mechanism is different in mechanical construction so long as it performs the same function as the prior machine and in substantially the same way, and produces the same result.

4. In determining whether the means employed in the infringing machine are substantially the same means as those employed in the patented machine, the patent should receive a liberal construction, where the patentee was the pioneer in the construction of such a machine.

5. The meaning of the term "known equivalent" in reference to a pioneer machine is, a known device, used as a substitute, and which effects the same result.

[No. 165.]

Argued Jan. 11, 1889. Decided Feb. 4, 1889.

APPEAL from a decree of the Circuit Court of the United States for the District of Massachusetts, in dismissing a suit in equity for the infringement of letters patent for an improvement in machines for sewing buttons on fabrics. *Reversed.*

Reported below, 23 Fed. Rep. 344.

The facts are stated in the opinion.

Mr. **Benjamin F. Thurston,** for appellants:

The original inventor will have a right to treat as infringers all who make machines operating on the same principles, and performing the same functions by analogous means or equivalent combinations.

Chicago & N. W. R. Co. v. *Sayles*, 97 U. S. 556 (24: 1054); *Clough* v. *Barker*, 106 U. S. 167 (27: 134); *Duff* v. *Sterling Pump Co.* 107 U. S. 639 (27: 518); *Consolidated Safety Valve Co.* v. *Crosby Steam Gauge & Valve Co.* 113 U. S. 159 (28: 939); *Am. Whip Co.* v. *Lombard*, 4 Cliff. 507; *Dunham* v. *Kimball*, 17 Fed. Rep. 810: *United Nickel Co.* v. *Pendleton*, 15 Fed. Rep. 745; *Tilghman* v. *Proctor*, 102 U. S. 708 (26: 279); *The Telephone Cases*, 126 U. S. 1 (31: 863).

Messrs. **J. E. Maynadier** and **George E. Smith,** for appellee:

Defendant's machine does not infringe, unless it contains all the elements of the Morley combination, or their equivalents or substitutes, within the meaning of the patent law.

Prouty v. *Ruggles*, 41 U. S. 16 Pet. 341 (10: 985); *Eames* v. *Godfrey*, 68 U. S. 1 Wall. 78 (17: 547); *Dunbar* v. *Myers*, 94 U. S. 187 (24: 34); *Gaye* v. *Herring*, 107 U. S. 640 (27: 601); *Gould* v. *Rees*, 82 U. S. 15 Wall. 187 (21: 39); *McMurray* v. *Mallory*, 111 U. S. 103 (28: 366); *Gill* v. *Wells*, 89 U. S. 22 Wall. 1 (22: 699); *Brown* v. *Davis*, 116 U. S. 237 (29: 659); *Sargent* v. *Hall Safe & Lock Co.* 114 U. S. 63 (29: 67).

The stitching mechanisms are substantially and radically different.

Fay v. *Cordesman*, 109 U. S. 408 (27: 979); *Union Water-Meter Co.* v. *Desper*, 101 U. S. 332 (25: 1024).

The scope of letters patent cannot be enlarged by the language used in other parts of the specification.

Lehigh Valley R. Co. v. *Mellon*, 104 U. S. 112, 118 (26: 639, 641); *Western Electric Mfg. Co.* v. *Ansonia Brass & Copper Co.* 114 U. S. 447 (29: 210).

Results are not patentable, but only specific mechanism or combinations of mechanism to accomplish results.

Seymour v. *Osborne*, 78 U. S. 11 Wall. 516 (20: 33); *O'Reilly* v. *Morse*, 56 U. S. 15 How. 119 (14: 601); *Burr* v. *Cowperthwait*, 4 Blatchf. 163-167; *Am. Pin Co.* v. *Oakville Co.* 3 Blatchf 190; *Fuller* v. *Yentzer*, 94 U. S. 288 (24: 103); *Werner* v. *King*, 96 U. S. 230 (24: 614); *Case* v. *Brown*, 69 U. S. 2 Wall. 320, 325 (17: 817); *Union Paper Bag Machine Co.* v. *Murphy*, 97 U. S. 120, 125 (24: 935, 936); *Worden* v. *Searls*, 121 U. S. 14, 23 (30: 853, 856); *Sharp* v. *Riessner*, 119 U. S. 631 (30: 507); *Grier* v. *Wilt*, 120 U. S. 412 (30: 712); *Snow* v. *Lake Shore & M. S. R. Co.* 121 U. S. 617 (30: 1004); *Electric R. R. Signal Co.* v. *Hall R. Signal Co.* 114 U. S. 87 (29: 96).

[265] *Mr. Justice* **Blatchford** delivered the opinion of the court:

This is a suit in equity, brought November 6, 1882, in the Circuit Court of the United States for the District of Massachusetts, by the Morley Sewing Machine Company and the Morley Button Sewing Machine Company against Charles B. Lancaster, for the alleged infringement of letters patent No. 236,350, granted January 4, 1881, to James H. Morley, E. S. Fay, and Henry E. Wilkins, on the invention of said Morley, on an application filed June 23, 1880, for an improvement in machines for sewing buttons on fabrics. The machine of the defendant is constructed in accordance with the description contained in letters patent No. 268,369, granted November 28, 1882, to Joseph Mathison, William D. Allen, and C. B. Lancaster, on the invention of said Mathison, for improvements in machines for securing buttons to material, on an application filed August 1, 1882.

The specification of the Morley patent says: "My invention consists in mechanism for automatically sewing shank buttons on to fabrics, shoes, etc., and the objects of my invention are to form a double-threaded stitch on the top side of the material being sewed upon, transversely to the direction of feed, and on the reverse side of the material two parallel lines of stitches at right angles to the first named ones, to make alternately long and short stitches, and to so feed buttons to be sewed by said machines as to present them at the proper time and in the proper place to be operated upon." The specification then describes, by reference to twenty-four figures of drawings, the mechanical means used by the patentee to perform the mechanical operations described. The specification then proceeds: "Having thus described the machine [266] and constructions set forth in the drawings, I wish it to be understood that the same is only one of different mechanisms which I have contemplated, and which may be effectually employed for carrying out the main feature of my invention, to wit: the automatic mechanical sewing of buttons to a fabric. Thus, different means may be adopted for carrying the thread through the eye of the button into the fabric, as, for instance, passing the hooked needle through said eye to a position to seize the thread from the straight needle, or form a suitable carrier and then draw the loop down through the fabric to be secured beneath by a shuttle or needle thread, or the eye-pointed needle may be used in connection with a loop spreader and shuttle for carrying a thread through the loop, a single thread or two threads being used. It will further be understood that wires may be sometimes substituted for threads, and that other feed mechanisms may be employed, the needles moving with, but not controlling, the fabric, as in the construction described."

There are eighteen claims in the patent, only four of which are relied upon by the plaintiffs namely: claims 1, 2, 8, and 18, which are as follows: "1. The combination, in a machine for sewing shank buttons to fabrics, of button-feeding mechanism, appliances for passing a thread through the eye of the buttons and locking the loop to the fabric, and feeding mechanism, substantially as set forth. 2. The combination, in a machine for sewing shank-buttons to fabrics, of a needle and operating mechanism, appliances for bringing the buttons successfully to positions to permit the needle to pass through the eye of each button, and means for locking the loop of thread carried by the needle to secure the button to the fabric, substantially as set forth." "8. The combination, in a ma-

chine for sewing buttons to fabrics, of button feeding and sewing appliances, substantially as set forth, and feeding appliances and operating mechanism whereby the feeding devices are moved alternately different distances to alternate short button stitches with long stitches between the buttons, as specified." "13. The combination, with button-sewing appliances, of a trough, appliances for carrying the but-
[267] tons successively from the trough to the sewing devices, and mechanism for operating said appliances and sewing devices, as set forth." The defendant's machine is known as the Lancaster machine.

The Morley machine contains and is made up of three main groups of instrumentalities: (1) mechanism for holding the buttons in mass, and delivering them separately, in proper position, over the fabric, so that they may be attached to it by the sewing and stitching mechanism; (2) the stitching mechanism; (3) the mechanism for feeding the fabric along, so as to space the stitches and consequently the buttons when sewed on.

In the button-feeding mechanism, there is a hopper containing the buttons in mass. The principal use of the machine is to sew buttons on to the uppers of buttoned boots, and the button designed to be used is one having a round ball affixed to a shank, which terminates in an eye. On the bottom of the hopper is a hopper valve, which picks out the buttons one by one and delivers them into an inclined trough. This trough has a V shaped groove along its bottom, midway between its sides, and the buttons enter the upper part of the trough with their shanks in all directions, and it becomes necessary to turn them over, so that the eyes will lie in the groove while the bodies of the buttons occupy the trough. The contrivance for accomplishing this consists of a flexible, corrugated strip of metal, lying over the top of the trough, and oscillated by proper machinery, which by contact with the bodies of the buttons, will roll them over so that their eyes will lie in the groove. After the buttons are thus arranged, they slide down the trough, being aided to do so by a jarring motion imparted to the latter. When they arrive at its lower end, which is bent so as to be nearly vertical, they lie with their heads towards the front of the machine, that is the side farthest from the driving pulley. In one modification of the machine, the buttons are held in the trough by a button-wheel, which is mounted on a vertical axis, and is provided with pockets, each capable of receiving a button, and admits of being intermittently revolved at proper times. This button wheel is used: (1) to close the bottom of the trough; (2) to receive buttons into its pockets; and (3) by its own revolution, to turn
[268] the buttons around, so that their eyes will lie towards the front of the machine. In order to prevent the buttons from falling out of the pockets, the button wheel rests upon a stationary table, which closes the bottoms of all the pockets but one. When a button arrives over the notch in the table, it has been turned around, on a vertical axis, 180°; but, as a plane passing through its eye is then vertical, it must be turned on a horizontal axis through 90°, so that its eye may lie flat, in order that the needle, which ascends from beneath, may pass through the eye. Therefore, when a button arrives over the notch in the table, a plunger or punch descends into the pocket and drives the button into a button carrier, which lies at that time immediately under the notch, and under the pocket into which the punch enters. When the button enters the carrier, a plane passing through its eye is still vertical, and the carrier therefore turns around on a horizontal axis 90°, to bring the eye of the button into such a position that it can be entered by the needle; and, as the carrier turns, it retracts, so as to bring the eye into such a position that a plane passing through it will be horizontal, and the needle will readily enter it. The patent describes a modified form of the contrivances for bringing the button into a position for the needle to enter its eye, in which modification the button wheel is dispensed with, and a light spring is applied to the bottom of the trough, to hold up the column of buttons, such spring operating as a spring gate, opened at proper intervals by mechanism, and shutting itself automatically. This mechanism, which also receives the button and turns it around 90° on a horizontal axis, and transfers it to the place where it is to be sewed, is a sort of spring nippers, one of the jaws of which is split so as to receive the shank of the button.

The above contrivances constitute what is called in claim 1, "button-feeding mechanism;" in claim 2, "appliances for bringing the buttons successively to positions to permit the needle to pass through the eye of each button;" in claim 8, "button-feeding appliances;" and, in claim 13, "a trough, appliances for carrying the buttons successively from the trough to the sewing devices, and mechanism for operating said appliances."

In the Morley patent, there is a contrivance [269]
for feeding the fabric so as to space the stitches, and consequently to space the buttons. The needles, while inserted in the fabric, move in the direction of the feed, carrying the fabric with them. The motion of the needles or feed is derived from revolving cams, and the two needles swing like an inverted pendulum. This kind of feed was well known in machines for sewing leather, prior to the date of the Morley patent. This feeding contrivance is what is called in claim 1, "feeding mechanism," and in claim 8, "feeding devices."

The Morley patent describes its stitch as being made by means of two needles, one eye pointed, like the Howe needle, and the other a hooked or crochet needle, such as is used in machines for sewing leather. These needles are set at an inclination to each other, across the line of the seam, and enter the fabric from beneath, and when they get above it, cross each other. The eye-pointed needle pierces the fabric and carries a bight of thread up above it, and then retreats a little to form a loop by causing the thread to expand away from the needle. During this time, the hooked needle has also penetrated the fabric from beneath, and when the loop is formed, passes between the eye-pointed needle and the thread, and, as both needles descend, the hook catches the thread supplied by the eye-pointed needle, and carries a bight of thread across the fabric and down through it to the under side, thus forming the transverse stitches on the button side of the fabric, the eye-pointed needle being

described as passing through the eye of the button, although it is stated that instead the hooked needle may pass through such eye. The passage of the needle through the eye, after it has passed through the fabric, holds the button upon the fabric. When the eye-pointed needle retracts and forms a loop above the eye of the button, a loop spreader is employed to spread the loop; and a shuttle carrying either one thread or two threads, is passed through the loop, the eye pointed needle, in its retraction, carrying, by means of the loop, the thread or threads furnished by the shuttle, and the stitch being the ordinary lock stitch. The stitch described in the Morley patent as made by eye-pointed and hooked needles, both operating [270] from the lower side of the fabric, and making transverse stitches on its upper side and longitudinal stitches on its lower side, is a stitch known prior to the date of the Morley patent.

In the Lancaster machine there are found combined together the same three main groups of instrumentalities above set forth as being found in the Morley patent. There is in the Lancaster machine a hopper containing the buttons in mass, and an inclined surface which supports a column of the buttons, the buttons lying with their shanks up and their bodies down. This hopper is provided with a reciprocating brush, which sweeps over the buttons and rolls them over so that their shanks, pointing upward, will fall into one or another of slits in a metal plate, which covers the inclined flat surface. These slits all converge into a single slit, so that the buttons slide down the various slits and ultimately lie in a single column in the single slit, with their shanks upward, upon an inclined plane surface. This single slit, and the plane surface which it covers, are twisted at the end, in such a manner that a plane passing through the slit is nearly horizontal, and the surface which is in contact with the head of the button, is nearly vertical. Consequently, when the buttons reach the bottom, they lie in such a position that a plane passing through the eye of the lowermost button is horizontal or nearly so. The column of buttons is held up by a light spring, and this spring gate is opened by the button itself, because the so-called trough holding the column of buttons vibrates sidewise, and a thread which passes through the eye of the lowermost button prevents that button from vibrating with the contrivance, and the button is pulled out by the thread, and, in being pulled out, overcomes the resistance of the spring. The eye of the lowermost button in the column lies directly under the needle, so that the needle enters it while it is still in the column. The contrivance containing the column then vibrates sidewise, so as to get out of the way of the needle in a subsequent feeding operation. The spring in the Lancaster machine, which holds up the column of buttons, was a common device in screw blank and eyelet machinery, to hold up a column of blanks and permit them to be removed one by one.

[271] In the Lancaster machine, there is a contrivance for feeding the fabric so as to space the stitches, and consequently to space the buttons, and the machine feeds by means of a single needle which reciprocates in a straight line, and, while it is inserted in the fabric, moves in the direction of the feed, carrying the fabric with it, the motion of the needle or feed being derived from revolving cams. The expert for the defendant says that he finds no substantial difference between the mechanism which feeds the fabric in the two machines.

As to the stitching mechanism of the Lancaster machine, the needle is on the upper side of the fabric, and descends through it. It is an ordinary crochet needle, provided with a cast off, both the needle and the cast off being like those described in the Morley patent, and the same which had been used for many years in sewing leather. The machine is also provided with a thread carrier beneath the fabric, like that used in machines for sewing leather. The eye of the button in the Lancaster machine makes a part of the stitch, and the stitch cannot be made unless a button is supplied at every alternate perforation of the needle. It is therefore necessary that the machine should have some contrivance for carrying some of the loops of the thread over the bodies of the buttons, so that the loop may be locked by the eye of the button. In making the stitch, the needle first passes down through the eye of the button, carrying its hook below the fabric. The thread carrier beneath the fabric then puts a loop of thread into the hook, and the hook rises, pulling a loop of thread through the fabric and through the eye of the button. The needle then descends again, sliding through such loop and piercing the fabric, and leaving the loop on top of the fabric. The thread carrier then again puts the thread into the hook of the needle, and the needle rises again, carrying another bight of the thread through the fabric and through the loop on top of the fabric, thus locking that loop. As the needle rises, a contrivance seizes both parts of the loop carried up through the second hole made by the needle, opens it wide, and passes it over the body of the button, and the part of the loop which is over the button is then pulled down through the fabric, and consequently around the shank of the button, thus [272] locking the stitch. A succession of these operations forms the stitch, and sews a row of buttons on the fabric, each alternate loop of the stitch being locked by the button itself. If the buttons were removed from the stitch, there would remain a succession of loops, and consequently no seam.

In the operation of the Lancaster machine, after the needle has passed through the eye of the button, the end of the so called trough and the needle move together, while the needle is making its feeding motion. The so called trough then stands still until the needle has ascended and pulled a loop of thread through the eye, and has again pierced the fabric. When the needle has got into the fabric a second time the button is pulled out of the end of the trough by the retreat of the trough towards the rear of the machine, and is so pulled out because at that time the fabric is standing still and the button is held to it by the loop of thread which is passed through the eye of the button. After the button is thus pulled out of the end of the trough, the trough stands still for a while, while a loop is passed over the body of the button, as above described, and the trough then returns again, so as to hold the eye of a second button in the path of the descending needle, the button being thus released, not by the mo-

tion of the fabric, but by the motion of the trough which carries the column of buttons.

It satisfactorily appears, that the Morley machine was the first one which accomplished the result of automatically separating buttons which have a shank from a mass of the same, conveying them in order to a position where they can be selected by the machine, one after another, and, by sewing mechanism, coupled with suitable mechanism for feeding the fabric, be sewed thereto at prescribed suitable distances apart from each other. The machine performs automatically these three functions of selecting, sewing and spacing. The problem to be performed was to select from a mass of buttons, furnished with heads and wire eyes projecting therefrom, single buttons, and to present them in succession to the needle of a sewing mechanism, so that the needle could pass through [273] the eye and secure it to the fabric. Machinery existed before for selecting from a mass wood-screw blanks, horse nails, and pins, and delivering them to other machinery; but, in such constructions, the shank of the article being heavier than its head, the tendency was for the articles to arrange themselves in the way with the shanks downward, the heads being supported on the top surface of the way. With such buttons as are used in the two machines in controversy, as the heads are much heavier than the shanks and the eyes combined, the buttons will not naturally arrange themselves with their shanks downward. It is therefore necessary to have some means for turning each button into such a position that a plane passing through its eye shall be perpendicular to a plane passing through the long axis of the sewing needle, so as to insure the passage of the needle through the eye. No machine existing prior to Morley's is shown to have accomplished that operation.

The substance of the defense in the case is, that there are certain specific differences between the button-feeding mechanisms in the two machines, and also certain specific differences between their sewing mechanisms; and hence that there is no infringement. This was the view taken by the circuit court in its opinion. 23 Fed. Rep. 344.

Morley, having been the first person who succeeded in producing an automatic machine for sewing buttons of the kind in question upon fabrics, is entitled to a liberal construction of the claims of his patent. He was not a mere improver upon a prior machine which was capable of accomplishing the same general result; in which case, his claims would properly receive a narrower interpretation. This principle is well settled in the patent law, both in this country and in England. Where an invention is one of a primary character, and the mechanical functions performed by the machine are, as a whole, entirely new, all subsequent machines which employ substantially the same means to accomplish the same result are infringements, although the subsequent machine may contain improvements in the separate mechanisms which go to make up the machine.

In *McCormick* v. *Talcott*, 61 U. S. 20 How. [274] 402, 405 [15:980, 981], the inquiry was, whether McCormick was the first person who invented, in a reaping machine, the apparatus called a divider, performing the required functions, or whether he had merely improved an existing apparatus, by a combination of mechanical devices which performed the same functions in a better manner. This court, speaking by Mr. *Justice* Grier, said: "If he" (the patentee) "be the original inventor of the device or machine called the divider, he will have a right to treat as infringers all who make dividers operating on the same principle, and performing the same functions by analogous means or equivalent combinations, even though the infringing machine may be an improvement of the original, and patentable as such. But if the invention claimed be itself but an improvement on a known machine by a mere change of form or combination of parts, the patentee cannot treat another as an infringer who has improved the original machine by use of a different form or combination performing the same functions. The inventor of the first improvement cannot invoke the doctrine of equivalents to suppress all other improvements which are not mere colorable invasions of the first."

So, also, in *Chicago & N. W. R. Co.* v. *Sayles* 97 U. S. 554, 556 [24:1053, 1054], this court, speaking by *Mr. Justice* Bradley, said, in regard to brakes for eight-wheeled railroad cars: "Like almost all other inventions, that of double brakes came in when, in the progress of mechanical improvement, it was needed; and being sought by many minds, it is not wonderful that it was developed in different and independent forms, all original, and yet all bearing a somewhat general resemblance to each other. In such cases, if one inventor precedes all the rest, and strikes out something which includes and underlies all that they produce, he acquires a monopoly, and subjects them to tribute. But if the advance toward the thing desired is gradual, and proceeds step by step, so that no one can claim the complete whole, then each is entitled only to the specific form of device which he produces, and every other inventor is entitled to his own specific form, so long as it differs from those of his competitors, and does not include theirs. These general principles are so obvious that they need no argument or illustration to support them."

The same view was directly applied in *Clough* [275] v. *Barker*, 106 U. S. 166, 177 [27: 134, 138], to the Clough patent for an improvement in gas burners. The first claim of that patent was for "the bat-wing burner, perforated at the base, in combination with the surrounding tube, substantially as described." The second claim read thus: "In combination with the bat-wing burner, perforated at the base, and surrounding tube, the tubular valve for regulating the supply of external gas to the burner, substantially as described." It appeared that in no prior structure had a valve arrangement been applied to regulate the flow of gas in such a combination as that covered by the first claim of the patent. It was, therefore, held that the patentee was entitled to the benefit of the doctrine of equivalents, as applied to the combination covered by the second claim. In the defendant's burner, the regulation was made by a tubular valve on the outside of the perforations, instead of on the inside, as in the patent, but performing its work by being screwed up or down, as in the patent. This court said: "Although in the Clough structure

the burner and surrounding tube revolve together in adjusting their position in reference to that of the tubular valve, so as to let in or turn off the supply of gas through the perforations, and although in the Clough structure the flame revolves by the revolution of the burner, and although in the defendant's burners the revolution of the surrounding tube regulated the supply of gas through such perforations, and neither the burner nor the flame revolved, the defendants' valve arrangement must be held to have been an equivalent for that of Clough to the full extent to which that of Clough goes, involving, perhaps, patentable improvements, but still tributary or subject to the patent of Clough. It is true that that patent describes the tubular valve as being inside of the burner-tube. But Clough was the first person who applied a valve regulation of any kind to the combination to which he applied it, and the first person who made such combination; and he is entitled, under decisions heretofore made by this court, to hold as infringements all valve regulations, applied to such a combination, which perform the same office in substantially the same way as, and were known [276] equivalents for, his form of valve regulation." See also *Duff* v. *Sterling Pump Co.* 107 U. S. 636, 639 [27: 517, 518].

The same doctrine was applied by this court in *Consolidated Safety Valve Co.* v. *Crosby Steam Gauge & Valve Co.* 113 U. S. 157 [28: 939], to the Richardson patent, the claim of which was "A safety valve with the circular or annular flange or lip *cc*, constructed in the manner, or substantially in the manner, shown, so as to operate as and for the purpose herein described." It appeared that Richardson was the first person who made a safety value which, while it automatically relieved the pressure of steam in the boiler, did not, in effecting that result, reduce the pressure to such an extent as to make the use of the relieving apparatus practically impossible, because of the expenditure of time and fuel necessary to bring up the steam again to the proper working standard; and that his valve was the first which had a strictured orifice leading from the huddling chamber to the open air, to retard the escape of the steam, and to enable the valve to open with increasing power against the action of the spring, and to close suddenly, with small loss of pressure in the boiler. It was held, that that claim covered a valve in which were combined an initial area, an additional area, a huddling chamber beneath the additional area, and a strictured orifice such as that above mentioned, the orifice being proportioned to the strength of the spring. It was also held, that under the claim of a second patent, namely: "The combination of the surface beyond the seat of the safety valve, with the means herein described for regulating or adjusting the area of the passage for the escape of steam, substantially as and for the purpose described," the patentee was entitled to cover the combination, with the surface of the huddling chamber and the strictured orifice, of a screw ring to be moved up or down to obstruct such orifice more or less, in the manner described. It was further held, that both of the patents were infringed by a valve which produced the same effects in operation by the means described in Richardson's claims, although the valve proper was an annulus, and the extended surface was a disc inside of the annulus, the Richardson valve proper being a disc and the extended surface an annulus surrounding the disc; and although the valve proper of the defendant had two ground joints, [277] and only the steam which passed through one of them passed through the stricture, while, in the Richardson valve, all the steam which passed into the air passed through the stricture; and although in the defendant's valve the huddling chamber was at the center, instead of at the circumference, and was in the seat of the valve, under the head, instead of in the head, and the stricture was at the circumference of the seat of the valve, instead of being at the circumference of the head. These conclusions were based on the fact, stated in the opinion of the court, that no prior structure was known or recognized as producing any such result as that produced by Richardson's apparatus; that the prior structures never effected the kind of result attained by his apparatus, because they lacked the thing which gave success; and that, taught by Richardson, and by the use of his apparatus, it was not difficult for skilled mechanics to take the prior structures and so arrange and use them as to produce more or less of the beneficial results first made known by him.

The doctrine thus applicable to a machine patent is of a kindred character with that applied, in this country and in England, to a patent for a process.

In *Tilghman* v. *Proctor*, 102 U. S. 707 [26: 279], the claim of Tilghman's patent was for "the manufacturing of fat-acids and glycerine from fatty bodies by the action of water at a high temperature and pressure." In the opinion of this court, delivered by *Mr. Justice* Bradley, the claim was sustained as a claim for a process, irrespective of the particular mode or form of apparatus for carrying it into effect, inasmuch as the patent described a practical and useful mode of carrying it into effect. It was said in the opinion, p. 721 [285]: "Had the process been known and used before, and not been Tilghman's invention, he could not then have claimed anything more than the particular apparatus described in his patent; but being the inventor of the process, as we are satisfied was the fact, he was entitled to claim it in the manner he did." It was also held that in such a case, a person who subsequently discovers a new mode of carrying out the patented process is not entitled to use the process without the consent of the patentee.

Reference was made in the opinion in that [278] case to the decision in *Neilson* v. *Harford*, 1 Web. Pat. Cas. 295, which related to Neilson's patent for the process of applying a blast of heated air to anthracite coal in a smelting furnace, by forcing such blast through a vessel situated between the blowing apparatus and the furnace, and heated to a red heat, the form of the heated vessel being stated by the patent to be immaterial. On this question this court said: "That a hot blast is better than a cold blast for smelting iron in a furnace, was the principle or scientific fact discovered by Neilson; and yet, being nothing but a principle, he could not have a patent for that. But having invented and practically exemplified a process

for utilizing this principle, namely: that of heating the blast in a receptacle between the blowing apparatus and the furnace, he was entitled to a patent for that process, although he did not distinctly point out all the forms of apparatus by which the process might be applied, having, nevertheless, pointed out a particular apparatus for that purpose, and having thus shown that the process could be practically and usefully applied. Another person might invent a better apparatus for applying this process than that pointed out by Neilson, and might obtain a patent for such improved apparatus; but he could not use the process without a license from Neilson. His improved apparatus would, in this respect, stand in a relation to the process analogous to that which an improvement on a patented machine bears to the machine itself."

In regard to the case of *Neilson* v. *Harford*, this court, speaking by *Chief Justice* Taney, in *O'Reilly* v. *Morse*, 56 U. S. 15 How. 62, 115, 116 [14: 601, 624], said, in reference to the opinion of the Court of Exchequer in that case, delivered by *Baron* Parke: "We see nothing in this opinion differing in any degree from the familiar principles of law applicable to patent cases. Neilson claimed no particular mode of constructing the receptacle, or of heating it. He pointed out the manner in which it might be done; but admitted that it might also be done in a variety of ways and at a higher or lower temperature, and that all of them would produce the effect in a greater or less degree, provided the air was heated by passing through a [279] heated receptacle. And hence it seems that the court at first doubted whether it was a patent for anything more than the discovery that hot air would promote the ignition of fuel better than cold. And if this had been the construction, the court, it appears, would have held his patent to be void, because the discovery of a principle in natural philosophy or physical science is not patentable. But after much consideration, it was finally decided that this principle must be regarded as well known, and that the plaintiff had invented a mechanical mode of applying it to furnaces; and that his invention consisted in interposing a heated receptacle between the blower and the furnace, and by this means heating the air after it left the blower, and before it was thrown into the fire. Whoever, therefore, used this method of throwing hot air into the furnace used the process he had invented, and thereby infringed his patent; although the form of the receptable or the mechanical arrangements for heating it might be different from those described by the patentee. For, whatever form was adoped for the receptacle, or whatever mechanical arrangements were made for heating it, the effect would be produced in a greater or less degree, if the heated receptacle was placed between the blower and the furnace, and the current of air passed through it. Undoubtedly, the principle that hot air will promote the ignition of fuel better than cold, was embodied in this machine. But the patent was not supported because this principle was embodied in it. He would have been equally entitled to a patent if he had invented an improvement in the mechanical arrangements of the blowing apparatus or in the furnace, while a cold current of air was still used. But his patent was supported because he had invented a mechanical apparatus by which a current of hot air, instead of cold, could be thrown in. And this new method was protected by his patent. The interposition of a heated receptacle, in any form, was the novelty he invented."

This court also said, in *Tilghman* v. *Proctor*, p. 728 [287]: "If the mode of applying the process is not obvious, then a description of a particular mode by which it may be applied is sufficient. There is, then, a description of the process, and of one practical mode in which it [280] may be applied. Perhaps the process is susceptible of being applied in many modes and by the use of many forms of apparatus. The inventor is not bound to describe them all, in order to secure to himself the exclusive right to the process, if he is really its inventor or discoverer. But he must describe some particular mode, or some apparatus, by which the process can be applied with at least some beneficial result, in order to show that it is capable of being exhibited and performed in actual experience."

The English doctrine is to the same effect. In the case of *Curtis* v. *Platt*, before *Vice-Chancellor* Wood, in 1863, reported in a note to *Adie* v. *Clark*, L. R. 3 Ch. Div. 134, the Vice-Chancellor said, p. 136, in regard to a patent for an improvement in spinning-mules: "When the thing is wholly novel, and one which has never been achieved before, the machine itself which is invented necessarily contains a great amount of novelty in all its parts; and one looks very narrowly and very jealously upon any other machines for effecting the same object, to see whether or not they are merely colorable contrivances for evading that which has been before done. When the object itself is one which is not new, but the means only are new, one is not inclined to say that a person who invents a particular means of doing something that has been known to all the world long before has a right to extend very largely the interpretation of those means which he has adopted for carrying it into effect." In the same case, on appeal before the Lord Chancellor (*Lord* Westbury), p. 138, the views of *Vice-Chancellor* Wood were concurred in.

In *Badische Anilin und Soda Fabrik* v. *Levinstein*, L. R. 24 Ch. Div. 156, 171, in regard to a patent for improvements in the production of coloring matters for dyeing and printing, *Mr. Justice* Pearson said: "Where a patent is taken out for a process for arriving at a known result (I mean, a result known before the patent is taken out for the process *simpliciter*), any other person may take out a patent for another process, or may use another process without taking out a patent, without any infringement of the process first taken out. But when a patent is taken out for a new result not known before, and there is one process described in the patent which is effectual for the purpose of arriving at that new result at the time when the patent [281] is taken out, the patentee is entitled to protection against all other processes for the same result; and no person can, without infringing upon his patent, adopt simply a different process for arriving at the same result." As authority for this view, he cites the cases of *Jupe* v. *Pratt*, 1 Web. Pat. Cas. 146; *Household Coal*

& Iron Co. v. *Neilson*, Id. 685; and *Curtis* v. *Platt, ubi supra;* and Goodeve, Pat Cas. 102. He decided in favor of the plaintiff.

On appeal to the Court of Appeals, L. R. 29 Ch. Div. 366, the decree was reversed, *Lords Justices* Bowen and Fry being in favor of a reversal, and *Lord Justice* Baggallay against it. On further appeal to the House of Lords, L. R. 12 App. Cas. 710, the decision of the Court of Appeal was reversed, and the decision of *Mr. Justice* Pearson was restored, *Lord* Halsbury (Lord Chancellor), *Lord* Herschell, and *Lord* Macnaghten sitting in the case and concurring. In the judgment given by *Lord* Herschell it is stated that all the judges of all the courts were agreed on the question of infringement.

A recent and instructive case is that of *Proctor* v. *Bennis*, L. R. 36 Ch. Div. 740, in regard to a patent for self-acting mechanism for supplying fuel at intervals to, and distributing it over the surface of, a fire. The court of first instance held the patent to be valid and to have been infringed. In the Court of Appeal, *Lords Justices* Cotton, Bowen, and Fry unanimously affirmed the decision, and held that a patent for a combination of known mechanical contrivances, producing a new result, was infringed by a machine producing the same result by a combination of mechanical equivalents of such contrivances, with some alterations and omissions, which did not prevent the new machine from being one which took the substance and essence of the patented invention; but that, where the result was old, and the novelty consisted only of improvements in a known machine for producing a known result, the patentee must be tied down strictly to the mode which he had described of effecting the improvements.

Lord Justice Cotton, after referring to the [282] case of *Curtis* v. *Platt*, L. R. 3 Ch. Div. 135, *note*, said (p. 757): "Where there is no novelty in the result, and where the machine is not a new one, but the claim is only for improvements in a known machine for producing a known result, the patentee must be tied down strictly to the invention which he claims, and the mode which he points out of effecting the improvement. But here the throwing coal on to the furnace by the intermittent radial action of a flap or door was new. Nothing of the kind had been done before. It is true, there had previously been imperfect machines for feeding furnaces automatically; but that had not, previously to this machine, been done by any intermittent radial action of a flap or door, as is done by the plaintiff. In my opinion, therefore, the opinions expressed by the Judges with reference to mere improvements in an old machine for an old purpose cannot apply to a case like this, where there was not only novelty in the machine, but novelty in the result to be produced by that machine."

Lord Justice Bowen said (p. 764): "Now, I think it goes to the root of this case to remember that this is, as was described by one of the counsel, really a pioneer invention; and it is by the light of that, as it seems to me, that we ought to consider the question whether there have been variations, or omissions, and additions, which prevent the machine which is complained of from being an infringement of the plaintiff's. With regard to the variations, I take precisely the same view that the *Lord Justice* Cotton has taken; and I will not travel over the ground again. With regard to the additions and omissions, it is obvious that additions may be an improvement, and that omissions may be an improvement; but the mere fact that there is an addition, or the mere fact that there is an omission, does not enable you to take the substance of the plaintiff's patent. The question is not whether the addition is material, or whether the omission is material, but whether what has been taken is the substance and essence of the invention. That seems to me to be the true test, as propounded by the House of Lords in *Clark* v. *Adie*, L. R. 2 App. Cas. 315, 320."

Lord Justice Fry said (p. 766): "The pith and substance of the plaintiff's invention is, in my judgment, putting coals upon a fire by an [283] intermittent radial action, an invention which, it may be remarked, reproduces with great exactitude the action of the human arm in placing coals upon a fire." Also (p. 768): "In the present case, we have these broad features of likeness, that in both machines the motion is a radial motion, in both machines it is an intermittent motion, in both machines it is of course produced by means of a radius, in both machines that radius is moved in one direction by tappets, and the same radius is moved in the opposite direction by a spring. All those broad features of the machines are in common; but there is this difference, that in the plaintiff's machine a shaft is impelled by the tappets and by the spring; whereas, in the defendant's machine the radius itself is impelled by the tappets and the spring. It follows that the radius in the plaintiff's is attached to the shaft, whereas the radius in the defendant's works on a pin. That is the broad distinction between them. The result, however, appears to me to be substantially the same; by substituting the pin for the shaft as the center on which the radius acts, and by impelling the radius itself instead of impelling the shaft fixed to the radius, you have produced in substance precisely the same radial action by the same means. You drive your radius in one direction by tappets, and you drive it in the other direction by a spring, and you produce the same result, namely: the feeding of coal by a radial motion made intermittent in one direction by the operation of the tappets, and in the other direction by the spring. I think, therefore, that we have a new combination for a new object, and that the gist of that combination has been taken by the defendant, and that, consequently, there is an infringement."

Applying these views to the case in hand, Morley having been the first inventor of an automatic button-sewing machine, by uniting in one organization mechanism for feeding buttons from a mass, and delivering them one by one to sewing mechanism and to the fabric to which they are to be secured, and sewing mechanism for passing a thread through the eye of the button, and securing it to the fabric, and feeding mechanism for moving the fabric the required distances to space the buttons, another [284] machine is an infringement, in which such three sets of mechanism are combined, provided each mechanism, individually considered, is a proper equivalent for the corresponding mech-

anism in the Morley patent; and it makes no difference that in the infringing machine, the button-feeding mechanism is more simple, and the sewing mechanism and the mechanism for feeding the frabric are different in mechanical construction, so long as they perform each the same function as the corresponding mechanism in the Morley machine, in substantially the same way, and are combined to produce the same result.

The view taken on the part of the defendant, in regard to the question of infringement, is that, inasmuch as the Lancaster machine uses different devices in its mechanisms which correspond to those referred to in the first, second, eighth, and thirteenth claims of the patent, those claims are to be limited to the special devices described in the patent, which make up such combinations, although both machines contain the same main group of instrumentalities which, when combined, make up the machine.

But, in a pioneer patent, such as that of Morley, with the four claims in question such as they are, the special devices set forth by Morley are not necessary constituents of the claims. The main operative features of both machines are the same. In each there is a receptacle for shank buttons in a mass; in each the mass of buttons passes in order into a conveyer-way; and in each the buttons conveyed to the sewing mechanism are presented successively with their shanks in a horizontal position, so as to allow of the passage of the needle through the eye. In the Morley machine, the buttons are carried along the raceway with their shanks downward, and are turned over by proper devices, so that the needle can enter the eye. In the Lancaster machine, the buttons travel along the raceway with their shanks upward, and the twisted shape of the raceway causes the buttons to be presented properly in succession to the needle. The only difference is, that in the Morley machine there is an active operating device for turning the buttons, in the shape of a but- [285] ton wheel which receives them, and shuts off the column, and takes one at a time out of the raceway; while in the Lancaster machine there is a passive device for accomplishing the same result of turning the buttons, and there is no button wheel, but there is a spring gate at the end of the raceway, which shuts off the column and, with the addition of other devices, allows one button at a time to be withdrawn from the raceway. But in the Morley patent a modification is described, whereby the button wheel is dispensed with, and a spring gate, as in the Lancaster machine, is employed, and an active device is used to open the spring gate and discharge the button, while in the Lancaster machine an active instrumentality is used to effect the same result, in combination with the sidewise movement of the raceway and in connection with the fact that the needle enters the eye of the button and passes a thread through it.

As to the mechanism for feeding the fabric, it is substantially the same in the two machines, for in each the needle operates to feed the fabric, while inserted in it, and it makes no difference that in the Morley machine the two needles swing like an inverted pendulum, while in the Lancaster machine the single needle swings in a straight line.

The principal difference relied on by the defendant is in regard to the sewing or stitching mechanism, based upon the difference in the kind of stitch used in the two machines for fastening the button to the fabric. The two stitches are, indeed, different, specifically considered. Morley uses the chain stitch. In the Lancaster machine, the stitch is made by looping the thread upon itself, and putting the bight of the loop around the shank of the button, so as to prevent the loop from pulling out, as it would otherwise do. The Morley patent, however, is not for any particular kind of stitch, or for any particular kind of mechanism for making such stitch. When the form of the stitch is changed, the instrumentalities for making it must change. Morley says, in his specification, that different means for making a stitch may be employed, as well as other feed mechanisms.

The contention of the defendant, in regard to the sewing mechanism, rests upon the proposition, that the convolution or concatenation of [286] thread which makes up the stitch in the Lancaster machine is different from that which is found in the Morley machine. In each machine, however, the buttons are spaced at the proper distances apart by the feeding mechanism which moves the fabric along, and the feeding device is moved alternately different distances, to alternate short stitches with long stiches between the buttons. In each machine, the button is taken possession of by the sewing mechanism, and the needle in each enters the eye of the button. In the Lancaster machine, however, the thread is so looped as to embrace also the shank of the button; and thus, if the button were not present in the Lancaster machine, the lock stitch would not be formed, but merely a succession of loops, which could be pulled out of the fabric. But this convolution or concatenation of the thread to form the fastening of the stitch, and the particular device which forms such convolution or concatenation, are not made, by the Morley patent, elements which enter into the claims in question.

Those claims are not for a result or effect, irrespective of the means by which the effect is accomplished. It is open to a subsequent inventor to accomplish the same result, if he can, by substantially different means. The effect of the rule before laid down is merely to require that, in determining whether the means employed in the Lancaster machine are substantially the same means as those employed in the Morley machine, the Morley patent is to receive a liberal construction, in view of the fact that he was a pioneer in the construction of an automatic button-sewing machine, and that his patent, especially in view of the character and terms of the four claims in question, is not to be limited to the particular devices or instrumentalities described by him, used in the three main elements of his machine, which, combined together, make it up. This is the principle applied by this court in *Consolidated Valve Co.* v. *Crosby Valve Co.* 113 U. S. 157 [28:989].

In all three of the main mechanisms used in the Lancaster machine, the means employed in it are substantially equivalents of those employed in the Morley machine. There is in each a hopper containing the mass of buttons and an inclined conveyer-way leading from the hop- [287] per to the sewing mechanism. The only ques-

tion in regard to the button-feeding mechanism is whether the means employed in the Lancaster machine for turning the button so that the eyes will come into the path of the needle are within the means employed for the same purpose in the Morley machine. In the Morley machine there is a flexible, corrugated strip of metal, which is oscillated to and fro, and operates to roll the buttons over so that their shanks will occupy a groove at the bottom of the trough. In the Lancaster machine, the reciprocating brush which sweeps over the bottom of the hopper in which the buttons lie in a mass, operates in an equivalent way with the corrugated strip of the Morley machine, and causes the shanks, which stand upward, of the buttons which have been rolled over by its action to enter slits in a metal plate, which converge in the single conveyer-way. The only difference is that, in the Morley machine, the shanks are caused to lie in one direction at one time in their path, and in the Lancaster machine the same result is accomplished by equivalent devices at another time.

As to the instrumentalities employed in the two machines for bringing the buttons one by one so that their eyes will stand in a horizontal position, ready to receive the needle, the buttons in the Morley machine pass down the conveyer-way with their eyes pointing downward, and occupying the groove, and from the conveyer-way they enter one by one into a button wheel which, by revolving, turns them 180°, and they are then received into a carrier which further turns them 90°, so as to get the eye into a horizontal plane. In the Lancaster machine it is not necessary to turn the buttons more than 90°, because they have been so rolled over by the brush in the hopper that their eyes point upward and enter the slits, and the conveyer-way is twisted and so turns the button that its eye will occupy a horizontal plane, ready to receive the needle. Then the needle, entering the eye of the button, pulls the button out of the conveyer and the latter moves out of the way, leaving the button in the possession of the sewing mechanism.

These instrumentalities are the equivalents of each other, the differences being merely formal, [288] active instrumentalities being employed in one case to turn the buttons and in the other that end being accomplished by the twisting of the conveyer-way. To employ a curved path to change the plane occupied by a body passing along that path was well known in mechanics, and is a device shown in the Morley patent for turning the buttons from a nearly vertical position to a horizontal position, by a corresponding variation in the inclination of the conveyer way. The only difference in the particular devices in the two machines in this respect results from the fact that in the Morley machine the buttons pass from the hopper with their shanks downward, while in the Lancaster machine they pass with their shanks upward. From this it results that, while the means employed in the two machines are substantially the same to effect the same result, active agents can be used in the one case, while passive agents are used in the other, to effect the same turning of the button. Indeed, in the modified form of construction suggested in the Morley specification, there is a spring gate for holding the buttons up, while in the Lancaster machine there is a similar spring, the only difference being that in the Morley machine the spring-gate is opened by a special device, while in the Lancaster machine the button itself opens the spring when the button-holding contrivance moves out of the way. In that modification of the Morley arrangement, as the specification states, the button wheel and the plunger are dispensed with, and it is not necessary to turn the button 180° on a vertical axis. So in this respect the only difference between the two machines is that in the Morley machine the spring gate is opened by an active device, while in the Lancaster machine the conveyer-way is moved sidewise by an active device, leaving the button behind, which opens the spring gate because the needle has entered the eye of the button.

In regard to the sewing mechanism in the two machines, a sewing needle with thread is employed in each to fasten the buttons to the fabric. In each the thread is continuous and follows the fabric as that is moved along by the mechanism which feeds it. The Morley machine employs the common stitch. In the Lancaster machine there is a peculiar stitch, in which a loop is drawn around the shank of the [289] button and thus the stitch is locked against being drawn out; but, notwithstanding the new convolution or concatenation of thread used in the Lancaster machine to secure the shank of the button to the fabric, the sewing mechanism of that machine is a substantial equivalent for the corresponding mechanism of the Morley patent. The invention of Morley in that respect did not consist in the peculiarity of the stitch, but in the combination of the needle and the mechanism for operating it with a button having a shank and an eye, the eye being held in a horizontal plane in the path of the needle, so that the thread carried by the needle could secure the button to the fabric. It is immaterial, in so securing the button, whether or not a loop is passed over the head of the button. The defendant's device and arrangement may be an improvement and the subject of a patent; but nevertheless the use of it involves the plaintiff's invention.

It may be true that the defendant's peculiar form of stitch was unknown before; and it may also be true that his arrangement for carrying the buttons with their eyes upward and turning the eyes into a horizontal plane by the twisting of the conveyer-way was not known before. Of course they were not before known in a machine for automatically sewing buttons to a fabric, because Morley's machine was the first to do that. But still, the defendant employs for the above purposes known devices, which in mechanics were recognized as proper substitutes for the devices used by Morley to effect the same results. Thus, in the Lancaster machine, the brush for rolling over the buttons is the obvious equivalent of the corrugated plate in the Morley machine. The mode of operation used in the Lancaster machine for rolling over the buttons so that their shanks shall point in a particular direction before entering the main conveyer-way is the same mode of operation found in the Morley machine, where the corrugated plate rolls the buttons over during their passage to the grooved

conveyer-way, so that their shanks shall all point in the same direction. In the Lancaster machine the action resulting from the twisted way is a mechanical equivalent for the button [290] wheel, the punch and the carrier used in the Morley machine to turn the eye into the proper plane for the needle to enter it; and the specific difference in the devices in this respect becomes less when the modification described in the Morley patent is used, so that in each of the two machines the button is turned only 90° on a horizontal axis, and in each of them a spring gate is employed, opened in the one case by an active device, while in the other case an active device moves the conveyer away from the particular button which is being held by the needle.

In this sense the mechanical devices used by the defendant are known substitutes or equivalents for those employed in the Morley machine to effect the same result; and this is the proper meaning of the term "known equivalent," in reference to a pioneer machine such as that of Morley. Otherwise, a difference in the particular devices used to accomplish a particular result in such a machine would always enable a defendant to escape the charge of infringement, provided such devices were new with the defendant in such a machine, because, as no machine for accomplishing the result existed before that of the plaintiff, the particular device alleged to avoid infringement could not have existed or been known in such a machine prior to the plaintiff's invention.

It results from these views that the decree of the Circuit Court must be reversed, and the case be remanded to that Court with a direction to enter a decree in favor of the plaintiffs, sustaining the validity of claims 1, 2, 8 and 13 of the plaintiffs' patent, and adjudging that those claims have been infringed by the defendant, and ordering a reference to a master to take an account of profits and damages in respect to such infringement, and awarding to the plaintiffs a perpetual injunction in respect to the four claims above mentioned; and to take such further proceedings as shall be according to law and not inconsistent with this opinion.

---

[372] THE BANK OF FORT MADISON, *Appt.*,

v.

PHILANDER M. ALDEN ET AL.

(See S. C. Reporter's ed. 372-381.)

Corporate stock—payment in property—right of creditor—how waived.

1. Where the charter of a corporation authorizes its capital stock to be paid for in property and the shareholders honestly, and in good faith, put in property instead of money in payment of their subscription, third parties have no ground of complaint.

2. Where full paid stock is issued for the property received, there must be actual fraud in the transaction to enable creditors of the corporation to call the stockholders to account.

3. A reconveyance of the lands to the stockholders, the original owners, upon their resolution, cannot deprive a creditor, not consenting thereto, of his right to compel the application of that fund to the payment of his demand, or of a ratable proportion with other creditors.

4. But the right to compel such application cannot be invoked by a stockholder, consenting to such disposition of the trust fund and himself participating in its appropriation.

5. That the property, when reconveyed, was sold by the holders at prices which, if the company could have obtained them, would have made its retention advisable, does not alter the transaction.

[No. 853.]

Submitted Jan. 4, 1889. Decided Feb. 4, 1889.

APPEAL from a decree of the Circuit Court of the United States for the Northern District of Illinois, dismissing a suit to compel the executors of a stockholder to pay out of his estate the amount of his alleged unpaid subscription for stock, so far as may be necessary, for the satisfaction of the claim of the plaintiff. *Affirmed.*

The facts are stated in the opinion.

Messrs. **Henry Strong** and **Theodore Sheldon** for appellant.

Mr. **John P. Wilson** for appellees.

Mr. Justice **Field** delivered the opinion of [373] the court:

The Bank of Fort Madison, the complainant below, the appellant here, is a corporation organized under the Laws of Iowa. The defendants are executors of the will of James S. Waterman, deceased, who, at the time of his death, was a citizen of Illinois. The bank is a creditor of a corporation created under the Laws of Wisconsin, known as the Black River Lumber Company, in the sum of $58,505.53, with interest from January, 1884. Waterman was a stockholder in the company; and the present suit is brought upon the allegation that, at the time of his decease, he was indebted to it in a large amount for stock subscribed, which had been issued to him, but for which he had never paid, except in lands not exceeding in cash value 40 per cent of the amount subscribed, and which lands have been reconveyed to him. The object of the suit is to compel the [374] executors to pay out of his estate the amount of his alleged unpaid subscription, so far as may be necessary, for the satisfaction of the claim of the bank. In addition to this, the complainant alleges an indebtedness of the estate of Waterman upon a promissory note of the lumber company to the amount of $10,000, which was indorsed by the firm of Ketchum & Waterman, of which the deceased was a partner. The court below decided against the claims of the bank and dismissed the bill. From its decree the case is here on appeal.

It appears that on the 17th of October, 1879, five persons residing at Fort Madison, Iowa, namely: Charles Brewster, Joseph A. Smith, William H. Kretzinger, Samuel Atlee, and J. C. Atlee, were the owners of a tract of "pine land" in Wisconsin, amounting to about 13,000 acres. At the same time the firm of Ketchum & Waterman, consisting of Henry Ketchum and M. M. Ketchum and James S. Waterman, were owners of a tract of similar land in that State, amounting to about 30,000 acres, which was subject to a mortgage for $75,000. On that day, these eight persons entered into an agreement in writing to form a corporation under the Laws of Wisconsin, to be designated the "Black River Lumber Company, for the manufacture and sale of lumber, logs, and timber," and such other business as might be in-

cluded in its charter, and to contribute and convey to a trustee or trustees, for the benefit of the company, under certain restrictions, the first tract mentioned, and 25,000 acres of the second tract. The company was to assume and pay all the deferred installments of the purchase money on this last tract as they matured, and the Ketchums and Waterman were to advance the necessary funds to take up the notes given, which amounted to $25,000, besides interest, and to receive the note of the company for the amount, payable, with 8 per cent interest, on or before July 1, 1880, which they were to hold as a lien on the premises.

It was also agreed, by the same instrument, that the parties residing at Fort Madison, owners of the 13,000-acre tract, should have three [375] sevenths of the stock of the company, and that the Ketchums and Waterman should have four sevenths—such stock to be received by them in full payment for their conveyances to the trustee. Each party was to receive stock in proportion to his individual interest in the lands.

Pursuant to this agreement the Black River Lumber Company was, in November, 1879, incorporated under the Laws of Wisconsin—the capital stock being fixed at $437,500 divided into 4,375 shares of $100 each. The parcels of land mentioned above were conveyed by the respective owners to Joseph M. Beck, of Fort Madison, in trust for the company, upon certain conditions, and to the parties shares were issued as follows: To James S. Waterman, 1,250 shares; to H. Ketchum, 625 shares; to M. M. Ketchum, 625 shares; to J. C. Atlee, 468 shares; to S. Atlee, 469 shares; to Charles Brewster, 235 shares; to W. H. Kretzinger, 468 shares; to Joseph A Smith, 235 shares. No money was paid by any of the parties for the stock, the land conveyed by them to the trustee being taken in full payment of their respective shares.

As stated above, the tract held by the Ketchums and Waterman was subject to a mortgage of $75,000 of the purchase money, and the trust upon which they conveyed the 25,000 acres to the trustee was, that upon the payment of the said purchase money and interest and the taxes thereon, he should convey the lands to the Black River Lumber Company according to the conditions of the contract of October 17, 1879.

As no money was paid by the stockholders for their stock, the company had no funds with which to commence business. To meet this condition the contract of October 17, 1879, provided that the parties residing at Fort Madison should advance from time to time, as the company might require funds, three fourths of $27,260.42, that is, the sum of $20,445.30, and take the note of the Black River Lumber Company for the amount. Upon this note, indorsed by those parties, the amount was borrowed from the Bank of Fort Madison. When this was exhausted the lumber company on various occasions borrowed money from the bank, upon its notes indorsed by different stockholders, until some time in March, 1880, when the loans thus made amounted to $65,000. Of this sum, $10,000 had been loaned upon a note of the [376] company indorsed by the firm name of Ketchum & Waterman. The indorsement was made by Ketchum, without any authority except that supposed to exist from his partnership in the firm. The bank then refused to make any further advances without additional security to cover existing as well as future loans. A chattel mortgage was thereupon executed to the bank by the lumber company upon all its logs and lumber, to secure such advances as well as other debts of the company. The bank immediately took possession of the property and made further advances to the amount of $20,000.

On the 8th of April following, the two Ketchums filed a bill in a state court of Wisconsin to set aside this chattel mortgage, making the bank, the company, and all its stockholders, except Waterman, parties, and alleging that the mortgage was a fraud upon the company; that the amount claimed by the bank was not due to it; and that the company owed a large amount, but had sufficient assets to pay all its debts. The bill prayed that the mortgage be declared invalid; that the property of the company be restored to it; and that pending the suit, a receiver of the property be appointed. Soon afterwards a stipulation was entered into by all the parties, that one William R. Sill be appointed by the judge of the court receiver of the property and effects of the company, and that, in addition to the usual powers of such officers, he receive authority to manage and control the property and dispose of the same in the customary course of trade, for cash or on credit, and apply the proceeds to pay the debts of the company, and when they were paid that he be discharged, and so much of the property as might be undisposed of be returned to the company; that the receiver give security for the faithful discharge of his trust in the sum of $25,000; and that as soon as he had been appointed, and this security given, the chattel mortgage, executed to the bank, should be canceled, and M. M. Ketchum, who was general manager of the company, should turn over and deliver to him all its property and effects. An order was made by the court in accordance with this stipulation.

When the first note given for the purchase money of the Ketchum and Waterman tract became due, Waterman advanced the money [377] to take it up, receiving in lieu of it the note of the Lumber Company, payable on or before July 1, 1880. After this latter note had matured he passed it over to one Milo Smith, who recovered judgment upon it against the lumber company. The receiver was authorized to pay all demands against that company, which he did, except those of the bank and this judgment in favor of Milo Smith.

In April, 1881, at a meeting of the stockholders of the lumber company, it was resolved that the trustee should reconvey the lands he held to the respective stockholders who had transferred them to him, except that the lands transferred by the Ketchums and Waterman should be conveyed to Waterman alone. To this arrangement the Ketchums assented. It was also agreed that the judgment of Milo Smith should be released as a lien on the lands to be reconveyed to the parties residing at Fort Madison, and should be collected only out of the lands to be reconveyed to Waterman. This arrangement was carried out in 1882, but modified, at the request of the directors of the

company, by the trustee conveying the lands to the lumber company, and that company simultaneously conveying the same to the original owners as above directed. Milo Smith's judgment was released as to the lands conveyed to the parties at Fort Madison, and as to the funds in the hands of the receiver. This disposition of the lands was made upon the belief, which all parties at the time appeared to entertain, that there would be sufficient money realized from property in the hands of the receiver to pay the demands of the bank in full. As the property consisted principally of logs and timber scattered over a large extent of territory, it was impossible to make any accurate estimate of its value. The suit was removed to the Circuit Court of the United States, and resulted in a final decree on the 15th of January, 1884, which adjudged that there was due by the lumber company to the bank the sum of $72,366.14, and directed the receiver to turn over to it certain property and credits in his hands, leaving a balance due of $58,505.53. The receiver was thereupon discharged.

James S. Waterman died on the 19th of July, [378] 1883, and the defendants below, appellees here, were appointed executors of his last will and testament.

The present suit is brought to enforce the payment of the balance thus adjudged to be due to the bank by the lumber company out of the estate of the deceased. The bill was framed upon the theory that the deceased was at the time of his death indebted to the company in a large amount for the stock issued to him, it being contended that the cash value of the lands conveyed to the trustee for that stock did not exceed 40 per cent of the amount subscribed. But this theory falls to the ground before the facts of the case, as detailed above. The parties who became stockholders had, pursuant to a previous agreement, conveyed their lands to a trustee, in trust for the corporation formed, upon an understanding that stock should be issued to them in proportion to their individual interests in the property. The subscription was made upon this arrangement and the parties acted with full knowledge of the conditions on which the property was to be transferred to a trustee, and the stock was to be issued to them. There was no attempt to pass off the property as different or more valuable than it was. There was no deception or misrepresentation of any kind in the case. No demand, therefore, against the estate of the deceased Waterman can be sustained, upon the assumption that by the conveyance of his land he had not paid up all that he contracted or was bound to pay by his subscription. There was no credit given by the bank to the company upon any representation of a different set of facts than that which actually existed. The bank was owned by two of the stockholders of the company, Brewster and Smith, who had participated in and had been well advised of all that was done by the company. They held all the shares of the bank, and were respectively its president and cashier. Such being the case, the answer to the claims of the bank is found in the decision of this court in *Coit* v. *Gold Amalgamating Co.* 119 U. S. 343 [30:420]. There the holder of a judgment against the corporation, being unable to obtain its satisfaction upon execution, and finding the company was insolvent, brought suit to compel the stockholders to pay what he claimed to be due and unpaid [379] on the shares held by them. He contended that the valuation put upon the property taken for such stock was illegally and fraudulently made at an amount far above its actual value, but the court said: "If it were proved that actual fraud was committed in the payment of the stock, and that the complainant had given credit to the company from a belief that its stock was fully paid, there would, undoubtedly, be substantial ground for the relief asked. But where the charter authorizes capital stock to be paid in property, and the shareholders honestly and in good faith put in property instead of money in payment of their subscriptions, third parties have no ground of complaint. The case is very different from that in which subscriptions to stock are payable in cash, and where only a part of the installments has been paid. In that case there is still a debt due to the corporation, which, if it becomes insolvent, may be sequestered in equity by the creditors as a trust fund liable to the payment of their debts. But where full-paid stock is issued for property received there must be actual fraud in the transaction to enable creditors of the corporation to call the stockholders to account." Under this authority no foundation is laid for calling upon the estate of the deceased to pay anything more for the stock issued to him than was paid.

But assuming this to be the correct doctrine, so far as any alleged difference between the subscription and the value of the property taken in payment is concerned, it is contended that the lands, which in the hands of the trustee constituted a trust fund for the benefit of the stockholders and creditors of the company, were not devested of their trust character upon their reconveyance to the stockholders; that the only effect of the reconveyance was to substitute several trustees in place of one; and that the appellant has therefore a right to proceed against either or all of them for an accounting. If this were a suit by a creditor other than a stockholder there would be great force in this position of the appellant. It might be well contended that a conveyance of the trust fund to the stockholders upon their resolution could not deprive a creditor, not consenting thereto, of his right to compel the application of that [380] fund to the payment of his demand, or of a ratable proportion with other creditors. But the right to compel such application cannot be invoked by a stockholder consenting to such disposition of the trust fund, and himself participating in its appropriation, as in the present case. Here the lands conveyed to the trustee were subject, as stated above, to a mortgage of $75,000, and its payment was assumed by the company. It turned out that the company was not prosperous in its business, and in the year following its organization it became involved in litigation, and a receiver of its property and effects was appointed. And in April, 1880, its stockholders upon consultation came to the conclusion that it would be impossible for the company to comply with its engagements to pay off that mortgage, and they therefore advised, and at their meeting resolved, that the lands should be reconveyed to the original

owners, and the company be thus released. The bank, through its stockholders, who were also stockholders of the lumber company, united in this advice and resolution, and in pursuance thereof the several reconveyances were made, as stated above, and among others to the stockholders of the bank. It was expected that the original owners would then hold the lands as they had held them before the lumber company was organized. That the property when reconveyed was sold by the holders at prices which, if the company could have obtained them, would have made its retention advisable, does not alter the transaction. The case of *Thompson* v. *Bemis Paper Co.* 127 Mass. 595, supports this conclusion. There a judgment creditor of the corporation, unable to enforce his judgment by execution, filed a bill in equity on behalf of himself and all other creditors, against the corporation and certain stockholders, to enforce a personal liability of the latter, on the ground that the capital of the corporation had been withdrawn and paid to the stockholders. He had at that time contracted for eight shares of the stock, paid for them in part, and voted as owner at meetings of the stockholders. At one of the meetings the sum of $16,528, being the amount of the cash assets of the corporation, was withdrawn from the capital of the corporation and divided among
[381] the stockholders in proportion to the amount of stock held by them respectively. The plaintiff was present and voted in favor of the division. Upon these facts it was held that the bill could not be sustained, although upon its filing the plaintiff was the absolute owner of the eight shares; and that he could not make the act which he had favored and voted for a ground for charging the stockholders with a personal liability for a debt due from the corporation to himself.

The indorsement of the note of the Black River Lumber Company for $10,000, by Ketchum in the firm name of Ketchum & Waterman, was made by way of security to the bank for its loan to that company. The transaction had no connection with the business of the firm. It was a guaranty of another's obligation, which no member of the firm had any authority to give. It was not shown, moreover, that the indorsement was made with the consent or even knowledge of Waterman. His estate, therefore, cannot be held liable upon the note.

Decree affirmed.

---

[387] MARGARET RUCKMAN, *Appt.*,
v.
JONATHAN CORY.

(See S. C. Reporter's ed. 387-390.)

Equity powers—laches—declarations of grantor—incompetent evidence, effect of on decree.

1. Only a court of equity can compel the surrender of the legal title to land held by the defendant and invest the plaintiff with it.

2. Laches cannot be imputed to one in the peaceable possession of land, for delay in resorting to a court of equity to correct a mistake in the description of premises in a conveyance through which title must be deduced. The possession is notice to all of the possessor's equitable rights, and he needs to assert them only when he may find occasion to do so.

3. A grantee in a deed is not affected with the declarations of the grantor made after the execution and delivery of the deed, unless, with full knowledge of such declarations, he acquiesces in or sanctions them.

4. Although incompetent evidence be received in an equity case, yet if the decree can be sustained by such evidence in the record as is competent and relevant, this court will not disturb the decree.

[No. 1199.]

Submitted Jan. 8, 1889. Decided Jan. 28, 1889.

APPEAL from a decree of the Circuit Court of the United States for the Southern District of Illinois, in favor of plaintiff, requiring defendant to convey by deed all her right and title in lands. *Affirmed.*

The facts are stated in the opinion.

Messrs. Henry W. Wells, Prettyman & Wallace and **Wm. M. Springer**, for appellant:

Until entry by a mortgagee, his right under the mortgage is personal estate and passes as personal property upon the death of the mortgagee, who is owner of the debt.

1 Jones, Mortg. 341; 2 Jones, Mortg. §§ 1101, 1108, 1427, 1559; *Lucas* v. *Harris*, 20 Ill. 169; *Burton* v. *Baxter*, 7 Blackf. 297; *Holdridge* v. *Sweet*, 23 Ind. 118; *Bell* v. *Shrock*, 2 B. Mon. 29; *Leonard* v. *Morris*, 9 Paige, 91; *Stone* v. *Locke*, 46 Maine, 445; *Burns* v. *Thayer*, 115 Mass. 89; *Alexander* v. *Hoffman*, 70 Ill. 117, 118.

The bill alleges that the deed to Ruckman was intended to secure a loan of money, and that the loan and debt is paid.

This may be proved by a defendant in a suit in ejectment.

Mowry v. *Cummings*, 34 Fed. Rep. 713; *Mester* v. *Hauser*, 94 Ill. 433, 438; *Packwood* v. *Gridley*, 39 Ill. 390.

The bill on its face shows that the complainant was guilty of great laches; that the Statute of Limitations had run against his debt more that twenty years before he filed his bill in this case; and a mortgage cannot be foreclosed when the debt is barred by statute.

Emory v. *Keighan*, 88 Ill. 482.

Redemption under the mortgage is cut off at the expiration of the same time that the right of foreclosure is barred.

2 Jones, Mortg. § 1146.

Specific performance is not decreed after great laches.

McLaurie v. *Barnes*, 72 Ill. 73; *McCabe* v. *Crosier*, 69 Ill. 502; *Alexander* v. *Hoffman*, 70 Ill. 115; *Pratt* v. *Stone*, 80 Ill. 441; *Railsback* v. *Williamson*, 88 Ill. 495; Sugden, Vendors, 444; *Thompson* v. *Bruen*, 46 Ill. 125; *Marshall* v. *Peck*, 91 Ill. 187; *Fowler* v. *Sutherland*, 68 Cal. 414; *Fitch* v. *Willard*, 73 Ill. 92; *Johnson* v. *Filson*, 6 West. Rep. 215, 118 Ill. 223; *McCartin* v. *Traphagen*, 10 Cent. Rep. 193, 43 N. J. Eq. 323.

The declarations of a vendor in reference to the title or ownership of the property, made after the date of his conveyance in question, are not admissible to defeat the title of his vendee, unless the vendee is present at the time such declarations are made and either expressly or tacitly assents to their truth.

Rust v. *Mansfield*, 25 Ill. 338; *Steinbach* v. *Stewart*, 78 U. S. 11 Wall. 567 (20: 56); *Randegger* v. *Ehrhardt*, 51 Ill. 108; *Dodge* v. *Freed-*

man's Sav. & T. Co. 93 U. S. 379 (23: 920); *Dunaway* v. *School Directors*, 40 Ill. 247; *Myers* v. *Kinzie*, 26 Ill. 37; *Higgins* v. *White*, 6 West. Rep. 345, 118 Ill. 619; *Brower* v. *Callender*, 105 Ill. 88; *Durand* v. *Weightman*, 108 Ill. 489; *Plain* v. *Roth*, 107 Ill. 595; 1 Greenl. Ev. §§ 557, 558; *Hazen* v. *Pierson*, 83 Ill. 241; *Cornett* v. *Williams*, 87 U. S. 20 Wall. 226 (22: 254); *Wageneseller* v. *Prettyman*, 12 Bradw. 316; *Richardson* v. *Hadsall*, 106 Ill. 479.

One attacking a title derived from a deceased person shall not prevail by testifying to things such deceased person said.

Alexander v. *Hoffman*, 70 Ill. 117, 118; *Boynton* v. *Phelps*, 52 Ill. 219; *Whitmer* v. *Rucker*, 71 Ill. 412; *Reader* v. *Inman*, 6 Bradw. 58; *Harris* v. *Bank of Jacksonville*, 22 Fla. 501; *Williams* v. *Edwards* (Mo.), 13 West. Rep. 685; *Buffum* v. *Porter* (Mich.), 14 West. Rep. 896.

A party who seeks to have an absolute deed declared a mortgage, and sets up his silent intention, or a verbal contract, to overcome and defeat the deed, must establish his case by evidence which is clear and convincing.

Wilson v. *McDowell*, 78 Ill. 514, 517; *Magnusson* v. *Johnson*, 73 Ill. 159; *Carr* v. *Rising*, 62 Ill. 14; *Taintor* v. *Keys*, 43 Ill. 333; *Ranstead* v. *Otis*, 52 Ill. 30; *Flagg* v. *Mann*, 14 Pick. 467; *Remington* v. *Campbell*, 60 Ill. 516; *Howland* v. *Blake*, 97 U. S. 626, 628 (24: 1028, 1029); *Cadman* v. *Peter*, 118 U. S. 73 (30: 78); *Tilden* v. *Streeter*, 45 Mich. 533, 540; *Pancake* v. *Cauffman*, 5 Cent. Rep. 205, 114 Pa. 113; *Sloan* v. *Becker*, 34 Minn. 491; *Kent* v. *Lasley*, 24 Wis. 654; *Lance* v. *Lehigh & W. Coal Co.* 3 Cent. Rep. 622, 112 Pa. 456; *Kendall* v. *Mann*, 11 Allen, 15–19; *Richardson* v. *Johnsen*, 41 Wis. 102; *Ramage* v. *Ramage* (S. C.), 2 S. E. Rep. 835; *Patterson* v. *Lamson*, 10 West. Rep. 440, 45 Ohio St. 77; 1 Jones, Mortg. §§ 16, 264, 269; *Rue* v. *Dole*, 107 Ill. 275; *Pitts* v. *Cable*, 44 Ill. 103, 106; *Stewart* v. *Fellows* (Ill.), 15 West. Rep. 274; *Reeve* v. *Strawn*, 14 Ill. 94; *Magnusson* v. *Johnson*, 73 Ill. 160; *Helman* v. *Messer* (Cal.), 16 Pac. Rep. 766.

Parol evidence cannot be received to establish a resulting trust in a stranger after the death of the grantee, in an absolute deed to real estate.

2 Sugden, Vendors, 156; Roberts, Frauds, 99; 1 Jones, Mortg. § 388; *Follansbe* v. *Kilbreth*, 17 Ill. 522; *Maafield* v. *Patchen*, 29 Ill. 42; *Carpenter* v. *Carpenter*, 70 Ill. 457.

The decree for costs against appellant is erroneous.

2 Jones, Mortg. § 1111; *Forbes* v. *Hall*, 34 Ill. 159; *Fleming* v. *McHale*, 47 Ill. 282; *Harper* v. *Ely*, 70 Ill. 582; *Tuttle* v. *Garrett*, 74 Ill. 444; *Phillips* v. *Hulsizer*, 20 N. J. Eq. 309, 316.

Mr. **John M. Palmer,** for appellee:

Assuming that Ruckman was a mere mortgagee of the lands in question, after his conveyance to the defendant nothing remained in him which could in any case descend to his legal representatives.

Gould v. *Newman*, 6 Mass. 239; 1 Jones, Mortg. § 808; *Welch* v. *Priest*, 8 Allen, 165; *Hunt* v. *Hunt*, 14 Pick. 374.

Laches cannot be imputed to one in peaceable possession of land, for delay in resorting to a court of equity.

Mills v. *Lockwood*, 42 Ill. 111; *Wilson* v. *Byers*, 77 Ill. 76; *McIntosh* v. *Saunders*, 68 Ill. 128.

Mr. Justice **Harlan** delivered the opinion of the court:

About the year 1855, or 1856, W. D. Bowers executed to the appellee Cory his bond in writing for the conveyance of certain lands in Mason County, Illinois, the consideration being the sum of $1,000 payable in two equal installments on the first day of October, 1857, and 1858, with 10 per cent interest from the date of sale. Cory went into possession under the purchase on or about May 1, 1856, during which year he prepared and sowed in wheat about seventy-five acres. In 1857 he erected a house on the premises, and, before the wheat crop of that year was cut, he moved into it with his family. During the next year he prepared for cultivation forty additional acres. He has cultivated, more or less, these lands ever since he first took possession of them. All the improvements thereon, including the fencing, as well as the taxes (except those for the year 1880), were regularly paid by him. [388]

On the first day of October, 1858, Bowers and wife conveyed the lands to Elisha Ruckman, of New Jersey, who was a first cousin of Cory and a man of large means. This was the first time Bowers had heard of Ruckman. Until the delivery of the above deed he knew of no one except Cory in the transaction for the sale of the lands.

On the 24th of April, 1862, Ruckman, by deed executed in New Jersey, conveyed the lands to Margaret Hopping, a single woman, to whom, at a subsequent date, January 25, 1864, he was married. Some time after their marriage, but at what time does not appear, Ruckman and his wife separated; and they were living apart when she brought in the court below an action of ejectment against Cory for the recovery of the lands. In that action—the date of the commencement of which is not shown by the record—she obtained a verdict and judgment; but Cory elected to take, and did take, as of right, a new trial, as provided for in the Statutes of Illinois. Rev. Stat. Ill. chap. 45. Thereupon he instituted the present suit against Mrs. Ruckman (her husband having died) for the purpose of obtaining a decree requiring her to convey to him, by sufficient deed, all her right, title, and interest in these lands. The claim for such relief is rested by the plaintiff upon these grounds: That the lands were purchased by him from Bowers, and paid for (except as to a small part of the price stipulated) with money borrowed for that purpose from Ruckman; that, without the knowledge or request of Ruckman, and solely for the purpose of securing him in the payment of the amount so loaned, he caused Bowers to make the conveyance directly to Ruckman; that although such conveyance was absolute in form, it was intended to be, and was only to operate as, a security for the debt due from him to Ruckman; that the latter, without his knowledge or consent, and without a good or valuable consideration to sustain it, made the deed of 1862 to Margaret Hopping; that only recently, namely: by said action of ejectment, did she assert any title under the deed to her; that his debt to Ruckman, on account [389]

of the borrowed money, has long since been discharged in full; and that, nevertheless, the defendant refused to convey to him, and was inequitably prosecuting her action of ejectment for possession.

The court below gave the plaintiff the relief asked by him.

1. The contention that the plaintiff has a plain, adequate and complete remedy at law cannot be sustained. It is not certain that he can successfully defend the action of ejectment. Besides, only a court of equity can compel the surrender of the legal title held by the defendant and invest the plaintiff with it.

2. Nor has the plaintiff been guilty of any such laches as would close the doors of a court of equity against him. He was in the peaceful occupancy of the premises for some years prior to any assertion of title upon the part of the defendant under the deed of 1862. If he had not been all the time in the possession of the premises, controlling them as if he were the absolute owner, the question of laches might be a more serious one for him than it is. The bringing of the action of ejectment was, so far as the record shows, the first notice he had of the necessity of legal proceedings for his protection against the legal title held by the defendant. As proceedings to that end were not unreasonably delayed, we do not perceive that laches can be imputed to him. Laches are rather to be imputed to the defendant, who, although claiming to have been the absolute owner of the lands since 1862, took no action against the plaintiff until the ejectment suit was instituted. *Mills* v. *Lockwood*, 42 Ill. 111, 118. "Laches," the Supreme Court of Illinois has well said, "cannot be imputed to one in the peaceable possession of land for delay in resorting to a court of equity to correct a mistake in the description of the premises in one of the conveyances through which the title must be deduced. The possession is notice to all of the possessor's equitable rights, and he needs to assert them only when he may find occasion to do so." *Wilson* v. *Byers*, 77 Ill. 76, 84. See also *Barbour* v. *Whitlock*, 4 T. B. Mon. 180, 195; *May* v. *Fenton*, 7 J. J. Marsh. 306, 309.

[390]

3. Reference is made to the depositions of several witnesses, including the plaintiff, who testified in his own behalf, in which are detailed statements made by Ruckman, at different times after 1862, in reference to the title to these lands. This evidence, it is contended, and properly so, was incompetent under the well established rule that "a grantee in a deed is not affected with the declarations of the grantor made after the execution and delivery of the deed, unless, with full knowlege of such declarations, he acquiesces in or sanctions them." *Higgins* v. *White*, 118 Ill. 619, 624 [6 West. Rep. 345]; *Steinbach* v. *Stewart*, 78 U. S. 11 Wall. 566, 581 [20: 56, 60]; *Winchester & P. Mfg. Co.* v. *Creary*, 116 U. S. 161, 165 [29: 591, 592]. But the question remains, whether the decree cannot be sustained by such evidence in the record as is competent and relevant. We think it can. At any rate, after a careful sifting of the proof, and giving due weight to all the facts and circumstances that may properly be considered, we do not see our way clear to disturb the decree.

There are no other questions in the case that we deem it necessary to notice.

The decree is affirmed.

THE EASTERN RAILROAD COMPANY, *Appt.*, *v.* UNITED STATES. [391]

(See S. C. Reporter's ed. 391-396.)

Readjustment of compensation for mail service.

Where a contract for carrying the mails was subject to the provisions of the Act of March 3, 1873—17 Stat. at L. 558, chap. 281; R. S. § 4002—which authorized the Postmaster-General to readjust the compensation to be paid therefor, graduated by the weight of the mail, and by subsequent Acts such officer was directed to and did readjust such compensation, giving due notice of the readjustment to the contractor, the latter, having received the reduced compensation for continued service, without protest or objection, must be held to have accepted it in full, and cannot recover the difference between the amounts actually received by him and the amount he would have received under the contract before the readjustment.

[No. 134.]

Argued Jan. 22, 23, 1889. Decided Feb. 4, 1889.

APPEAL from a judgment of the Court of Claims, dismissing a claim for a balance alleged to be due for carrying the United States mail. *Affirmed.*

Reported below, 20 Ct. Cl. 23.

The facts are stated in the opinion.

Messrs. **A. J. Willard,** *Sam'l M. Lake, Wm. E. Earle* and *Jas. L. Pugh, Jr.*, for appellant:

The law vested the Postmaster-General with ample authority to make this contract, and the defendant is bound by the contract.

Lee v. *Munroe*, 11 U. S. 7 Cranch, 366 (3: 373); *Hunter* v. *U. S.* 30 U. S. 5 Pet. 188 (8: 86).

The acceptance of a proposal which binds the bidder creates a contract as valid as a formal written one executed by the parties.

Garfielde v. *U. S.* 93 U. S. 242 (23: 779); 1 Para. Cont. 407; *Erwin's Case*, 13 Ct. Cl. 49.

Messrs. A. H. Garland, Atty-Gen., and **Robert A. Howard,** *Assist. Atty-Gen.*, for the United States, appellee.

Mr. Justice **Harlan** delivered the opinion of the court:

The claim upon which this action is brought is for the balance alleged to be due the appellant for carrying the mails of the United States on certain routes, between July 1, 1878, and June 30, 1881.

It appears from the findings of fact that this company, for some years prior to March 31, 1877, carried the mails on each one of thirteen routes, under written contracts with the Postmaster-General prescribing the compensation it was to receive for such services. The last one of these contracts was made March 31, 1874, and covered the period beginning January 1, 1874, and ending June 30, 1877. This contract was made subject to the provisions of the Act of March 3, 1873 (17 Stat. at L. 558, chap. 281; R. S. § 4002), which authorized and directed the Postmaster-General to readjust the compensa- [392]

tion thereafter to be paid for the transportation of mails on railroad routes, the pay per mile per annum, not to exceed certain rates, graduated by the average weight of the mails carried, "to be ascertained in every case by the actual weighing of the mails for such a number of successive working days, not less than thirty, at such times after June 30, 1873, and not less frequently than once in every four years, and the result to be stated and verified in such form and manner as the Postmaster-General may direct."

By an Act approved March 3, 1875, the Postmaster-General was directed to have the mails weighed by the employés of the Post Office Department, and to have the weights stated and verified to him by them, under such instructions as he considered just to the Department and to the railroad companies. Subsequently, by an Act approved July 12, 1876, that officer was "authorized and directed to readjust the compensation to be paid from and after July 1, 1876, for transportation of mails on railroad routes by reducing the compensation to all railroad companies for the transportation of mails 10 per centum per annum from the rates fixed and allowed" by the first section of the Act of March 3, 1873. The same Act provided that railroad companies, whose railroads were constructed in whole or in part by a land grant made by Congress on the condition that the mails should be transported over their road at such price as Congress should by law direct, shall receive only 80 per centum of the compensation authorized by the Act of July 12, 1876, 19 Stat. at L. 78, chap. 179; Supp. R. S. 224.

The company was paid according to the terms of the contract of March 31, 1874, up to and including June 30, 1877.

Prior to February 1, 1877, the Postmaster-General sent to claimants, for each of the routes covered by its contract with the United States, a "railroad-distance circular," and, prior to April 16, 1877, a "railroad-weight circular;" the object of the first circular being to obtain accurate information, for the use of the Department, in regard to the length and location of the plaintiff's road, and that of the last being to [393] obtain a statement of mail matter conveyed by it. The information called for by these circulars having been furnished, the Postmaster-General, December 20, 1877, readjusted the compensation to be paid for carrying the mails over the routes in question, giving due notice thereof to the Sixth Auditor and to the railroad company. That order was in this form: "Authorize the Auditor of the Treasury for the Post Office Department to pay the Eastern Railroad Company, quarterly, for carrying the mail between and from July 1, 1877, to June 30, 1881, at the rate of $ per annum (being $ per mile per annum), unless otherwise ordered, subject to fines and deductions." On the same day the Postmaster-General sent to the company a circular notice of adjustment of pay for each route in this form: "The compensation for the transportation of mails, etc., on your road, route between and , has been fixed from July 1, 1877, to June 30, 1881 (unless otherwise ordered), under Acts of March 3, 1873, July 12, 1876, upon returns showing the amount and character of the service for thirty days, commencing April 16, 1877, at the rate of per annum, being $ per mile for miles." The compensation thus fixed was the maximum authorized by the Act of 1873, as amended by that of 1876.

By the first section of the Act of June 17, 1878, making appropriations for the fiscal year of the Post Office Department for the year ending June 30, 1879, and for other purposes, the Postmaster-General was "authorized and directed to readjust the compensation to be paid from and after the first day of July, 1878, for transportation of mails on railroad routes by reducing the compensation to all railroad companies for the transportation of mails 5 per centum per annum from the rates for the transportation of mails, as the basis of the average weight fixed and allowed" by the first section of the Act of July 12, 1876. (20 Stat. at L. 140; Supp. R. S. 359.) On the 12th of July, 1878, that officer readjusted the compensation to be paid to the appellant for the transportation of mails on said routes after July 1, 1878. Of this readjustment due notice was given to the company and to the Auditor of the Treasury for the Post Office Department. The notice to the [394] auditor was in this form: "Authorize the auditor to decrease the pay of the Eastern Railroad Company for carrying the mails between and from July 1, 1878, to June 30, 1881, at the rate of per annum, leaving the pay from that date per annum (being per mile), being a reduction of five per centum from the rates fixed for weight of mails in accordance with the Act of June 17, 1878." The notice to the company was in this form: "Please take notice that the Auditor of the Treasury for this Department has been directed to decrease the pay of your company for the conveyance of the mails on Route 9, between Portland and Portsmouth, from July 1, 1878, to June 30, 1881, $558.19 per annum, leaving the pay from the first named date $13,233.55 per annum, being a reduction of 5 per centum from the rates fixed for weight of mails in accordance with the provision of the Act of June 17, 1878."

In 1879, the Postmaster-General, upon the application of the railroad company, caused the mails on the route between Portland and Boston to be reweighed. That reweighing resulted in an order, August 26, 1879, considerably increasing the compensation previously directed to be paid, but still it was 5 per cent less than it would have been under the order of December 20, 1877, unaffected by the reduction made by the order of July 12, 1878.

For carrying the mails on all the routes in question, from July 1, 1877, to June 30, 1881, both inclusive, the railroad company received compensation in conformity with the above orders of the Postmaster-General; that is from July 1, 1877, to June 30, 1878, according to the orders and notice of December 20, 1877, and from July 1, 1878, to December 30, 1881, according to those orders as modified July 12, 1878, and August 26, 1879.

The difference between the amounts actually paid to the claimant under all of said orders, and the amount it would have received under the order of December 20, 1877—if it was not bound by the order of July 12, 1878, making the reduction of 5 per cent—is $5,926.56, the amount claimed in the petition.

It does not appear that the company, at any [395] time before the commencement of the action,

made any protest against or objection to the readjustments of its compensation made by the Postmaster-General.

After the first of July, 1877, the company was under no legal obligation to carry the mails. It carried them after that date under an implied contract that it should receive such compensation as was reasonable, not exceeding the maximum rates prescribed by Congress, and subject to a readjustment of rates as required by the Act of 1876. Such readjustment took place on the 20th of December, 1877. If the order made by the Postmaster-General on that day, fixing certain rates, upon the basis of a reduction of 10 per cent, for carrying the mails from July 1, 1877, to June 30, 1881, and its acceptance by the railroad company, constitute an express contract, in respect to the compensation to be paid to it, still, as, by the terms of both the order and the notice, those rates were to govern, "unless otherwise ordered," there is no ground for the company to complain of the subsequent reduction of 5 per cent. This reservation of power in the Postmaster-General opened the way for him to exercise the authority conferred, and to conform to the direction given, by the Act of 1878. It cannot be said that the reduction of 5 per cent was a violation of that contract; for, according to its terms, the parties agreed that the rates fixed at the latter date were subject to such future orders as the Postmaster-General might make. We do not mean that the railroad company was bound to continue the carrying of the mails, if subsequent changes in the rates were unreasonable [396] or did not meet with its assent. On the contrary, it was at liberty, when the 5 per cent reduction was made, to discontinue their transportation on its cars.

Chief Justice Richardson, speaking for the Court of Claims, properly said that the order for the reduction under the Act of 1878, and the notice thereof to the company, "constituted an offer on the part of the Postmaster-General which the claimant might decline or accept at its pleasure." Having received the reduced compensation without protest or objection, it may be justly held to have accepted that offer.

It is a mistake to suppose that these views are inconsistent with the decision in *Chicago & N. W. R. Co.* v. *United States*, 104 U. S. 684 [26:892]. It was there held that the Act of 1876 should not be construed as affecting the rights of a railroad company under a contract for transporting the mail which was in all respects valid under the laws in force when it was made; that the language of the Acts of 1875 and 1876 "may well be satisfied by confining them to cases where no time contracts for service were then in existence, and to contracts thereafter to be entered into;" and that this did not legitimately apply to contracts then existing, whose terms had not expired. That case differs from the present one in the important particular, that in the former the company bound itself to carry the mails during a certain period, and consequently, its acceptance from time to time, during that period, of less than it was entitled to demand did not prejudice its right to claim what was legally due under its contract; whereas, in the present case, the company could have declined to accede to the readjustments of rates when they were made.

We perceive no error in the judgment, and it is therefore affirmed.

THOMAS H. ALLEN ET AL., *Appts.*, [465]
v.
BENJAMIN H. SMITH ET AL.

(See S. C. Reporter's ed. 465-470.)

Creditors' suit to set aside judgment and sale—burden of proof—Statute of Limitations—waiver.

1. A suit in equity by creditors to set aside, as fraudulent and void, a judgment against their debtor and a sale of his lands on the judgment, *held*, to have been properly dismissed upon the facts.

2. In such action the burden of proof is on the plaintiffs to impeach the judgment sought to be set aside.

3. In such action the plaintiffs cannot avail themselves, as an objection to the judgment, of the fact that the debtor did not plead the Statute of Limitations to a part of the claim for which it was rendered. A defendant is at liberty to waive a plea of the Statute of Limitations, especially where there is sufficient in the relations of the parties and in the circumstances of the case to warrant him in doing so.

[No. 14.]

Submitted Feb. 15, 1888. Decided March 5, 1889.

APPEAL from a decree of the Circuit Court of the United States for the Eastern District of Arkansas, dismissing a suit in equity brought by creditors to set aside a judgment against their debtor and a sale of his lands thereunder, as fraudulent and void as against the plaintiffs, and to subject the lands to the payment of the plaintiffs' judgments. *Affirmed.*

The facts are stated in the opinion.

Mr. **A. H. Garland**, for appellants:

The settlement had between Todd and Smith presumes that everything was included in it that properly could have been included.

1 Greenl. Ev. § 196, note 4; 2 Whart. Ev. 1133; *Smith* v. *Tucker*, 2 E. D. Smith, 193; 1 Am. & Eng. Enc. of Law, p. 109, § 3, note 2; *Carlton* v. *Buckner*, 28 Ark. 66; *Lawrence* v. *Ellsworth*, 41 Ark. 502; *Standard Oil Co.* v. *Van Etten*, 107 U. S. 325 (27:319).

The adjustment must be final and conclusive.

Hager v. *Thomson*, 66 U. S. 1 Black, 80 (17:41); *Van Hasselt* v. *Sack*, 13 Moore, P. C. 185; *Cave* v. *Mills*, 7 Hurl. & N. 913.

We may judge of the character of one action and the intent of the parties by similar action about the same time by the same parties.

Castle v. *Bullard*, 64 U. S. 23 How. 172 (16:424); *Lincoln* v. *Claflin*, 74 U. S. 7 Wall. 132 (19:106).

The fraud of Smith in procuring title through sales of these lands vitiates the sales.

Sands v. *Codwise*, 4 Johns. 536; *Gilbert* v. *Hoffman*, 2 Watts, 66; *Jackson* v. *Summerville*, 13 Pa. 359.

The original suit was revived against Springer as administrator of the estate of Todd. The effect of this revivor was to exhibit the demands against the said estate.

Gantt, Dig. (Ark.) § 99; *McCoy* v. *Jackson*, 21 Ark. 474; *Pope* v. *Boyd*, 22 Ark. 537; *Williamson* v. *McCrary*, 33 Ark. 478; *Eddins* v. *Graddy*, 28 Ark. 500.

Mr. **U. M. Rose**, for appellees:

The plaintiffs' demands, not having been presented to the administrator within the time prescribed by law, were barred.

Morgan v. *Hamlet*, 113 U. S. 449 (28:1043); *Barber* v. *Peay*, 31 Ark. 392; *State Bank* v. *Tucker*, 15 Ark. 39; *Ryan* v. *Lemon*, 7 Ark. 78; *Bennett* v. *Dawson*, 15 Ark. 412; *S. C.* 18 Ark. 334; *Green* v. *Brooks*, 25 Ark. 318; *Connelly* v. *Weatherly*, 33 Ark. 658; *Frellson* v. *Green*, 19 Ark. 378.

The affidavit cannot be waived by the administrator.

Alter v. *Kinsworthy*, 30 Ark. 756.

Mr. Justice **Blatchford** delivered the opinion of the court:

This is an appeal by Thomas H. Allen and two other persons, partners under the name of Allen, Nugent & Co., and Thomas H. Allen individually, from a decree of the Circuit Court of the United States for the Eastern District of Arkansas, dismissing their bill in a suit in equity brought by them against Benjamin H. Smith and the heirs at law of William H. Todd, deceased, and Levi H. Springer, administrator of Todd, to set aside, as fraudulent and void as against the plaintiffs, as creditors of Todd, a judgment recovered by Smith against Todd, and the sale of certain lands of Todd to Smith on execution on that judgment, and for a sale of those lands under judgments obtained by the plaintiffs, and the payment of those judgments out of the proceeds of such sale.

The substance of the bill is that, in January, 1875, Todd executed three promissory notes, payable in one, two and three years respectively from their date, in favor of one Cohen, each for $1,666.66, with 10 per cent interest; that Allen, Nugent & Co. became the owners [466] of those notes, and brought suit on the first two of them which fell due, in the Circuit Court of Chicot County, Arkansas, by attachment against Todd, and levied on his interest in certain land in Chicot County on the 18th of June, 1877; that, on February 2, 1878, they obtained judgment in that suit, against Todd, for $4,341.64, with 10 per cent interest from that date, the judgment declaring that it was a lien upon the property attached; that like proceedings were had by them by attachment of the same land in suit on the third note, in the Circuit Court of the United States for the Eastern District of Arkansas, and a judgment was recovered by them against Todd, in that suit, on the 19th of April, 1878, for $2,206.47, with 10 per cent interest from that date, the judgment declaring that it was a lien on the land; that in both of those suits Todd was personally summoned; that on the 13th of July, 1876, Todd made another note in favor of Thomas H. Allen & Co., of which firm Thomas H. Allen was a member, for $1,507.58, payable thirty days from date; that a judgment was recovered by them on that note, against Todd, in a court in Pennsylvania, on July 17, 1877, for $1,637.33; that that judgment was duly assigned to Allen, and he brought suit on it in the Circuit Court of Chicot County, against Todd, by attachment; that the interest of Todd in the land before mentioned was attached in that suit, and personal service was also had upon Todd, and Allen recovered judgment in the suit, against Todd, on February 2, 1877, for $1,683.83, with interest from that date; and that the judgment declared that it was a lien on the land attached.

The bill further alleges, that at the time of the execution of the four notes, and afterwards, and up to and after the first of August, 1876, and at the time of the levy of the three attachments, Todd was the owner of an undivided half interest in a plantation called the Bellevue Plantation, in Chicot County, with certain exceptions, which plantation contained the land mentioned as having been so attached, and other land; that at the July Term, 1876, of the Circuit Court of Chicot County, judgments were obtained against Todd in favor J. McMurray & Co. and of Jurey & Gillis; that a decree in favor of one Halliday, enforceable by execution, already existed against him in that [467] court, and other creditors of his were pressing him; that, finding himself thus in failing circumstances, he conspired with the defendant Smith, who was his son-in-law, to transfer to Smith a large and valuable part of his property, to save it from his creditors; that, in pursuance of that design, notwithstanding Smith was largely indebted to Todd, after January, 1869, for unpaid purchase money for the half interest in the Bellevue Plantation, which Smith had purchased from Todd, and although Smith resided on that plantation, and controlled the crops raised on it, and his services had been taken into account in the adjustments and payments from time to time between the parties, and Smith had kept another manager almost the entire time on a plantation of Todd's called Yellow Bayou, and there was in fact nothing due from Todd to Smith for services, Smith, in pursuance of such fraudulent purpose, brought suit against Todd in the Circuit Court of Chicot County, on the 4th of August, 1876, for the sum of $8,000, for pretended services not paid for, which had been rendered by Smith for Todd, in managing his Yellow Bayou Plantation and his half interest in the Bellevue Plantation, from January, 1869, to that date, at $1,000 a year and interest, and caused an attachment to be issued, which was levied, on August 8, 1876, by direction of Smith, on all the personal property of Todd on the two plantations; that on the 14th of August, 1876, the Yellow Bayou Plantation was sold, to satisfy Halliday's decree; that after applying its proceeds a balance still remained due to Halliday; that such balance and the McMurray judgments amounted to $1,285; that executions were issued on those judgments, and for the balance due Halliday, and on September 28, 1876, to satisfy them, the half interest of Todd in 1200 acres of the Bellevue Plantation, being its most valuable part, was sold, and bought in by Smith at less than $3 an acre for an entire interest, when the same was at the time reasonably worth from $20 to $30 an acre; that Todd, in pursuance of his fraudulent scheme, did not redeem the lands from the sale, and Smith afterwards received deeds therefor; that afterwards, on December 19, 1876, Smith directed the sheriff to release to Todd 115 bales of cot- [468] ton, on which the attachment of Smith had been levied on August 8, 1876, and to attach the interest of Todd in that part of the Bellevue Plantation which had been attached in the suits of the plaintiffs, and also to attach some sixty

other acres of land which Smith claimed was a part of the Bellevue Plantation; that no steps were taken in the attachment suit of Smith against Todd at the January Term, 1877, of the Chicot Circuit Court, the judgment in favor of Jurey & Gillis having been in the mean time paid off by money raised from the sale of the cotton so released by Smith; that at the July Term, 1877, of the Chicot Circuit Court, and after the levy, on June 18, 1877, of the attachments in the suits by the plaintiffs, an appearance was entered by Todd in the suit, and a pretended answer was filed for him to the complaint; that one Mole, in whose charge and custody the property attached in the suit was left, was at the time in charge of the Yellow Bayou Plantation, and he and others, as agents of Todd, had for years been in charge of it; that five of the eight years' services charged for by Smith were barred by limitation; that nevertheless no defense was in good faith put in to the suit, the answer not being sworn to and no issue made; that the case was submitted to a jury, and a verdict rendered, and a judgment entered for $8,000 against Todd, which declared that it was a lien upon the property levied on under the attachment in the suit, from the date of the levy; and that, on April 1, 1878, the said property was sold and bought in by Smith for the nominal sum of $4,055.

The bill further alleges that the property on which the liens of the plaintiffs are declared to rest is reasonably worth a large sum, say $20,000, and more than enough to pay off their demands, if the fraudulent judgment in favor of Smith, and the sale thereunder, should be set aside, and the property be sold at a fair price.

Smith filed an answer to the bill, taking issue on its material allegations, and denying that there was anything collusive or fraudulent in his obtaining his judgment and buying under it the lands in question. The answer also avers that the suit was vigorously contested by [469] Todd; that Smith was justly entitled to recover from Todd the whole amount for which the judgment was rendered; and that at the time he acquired title to the lands so purchased, they were subject to two mortgages, one of which was for about $18,000, and the other of which had been foreclosed, and a decree obtained, in October, 1881, fixing a lien on the lands, superior to the title of Smith, for $9,743.

The heirs of Todd also put in an answer, taking issue as to the material allegations of the bill, and averring that Smith had had continuously, from about the first of January, 1868, the supervision and management of the Yellow Bayou and Bellevue Plantations, as long as Todd owned or controlled them, and had never received any compensation for his services before the suit for the $8,000 was brought; and that they and each of them believed that the judgment was just and that the sum was due to Smith from Todd.

Springer, the administrator of Todd, also put in an answer to the same effect as that of Smith.

The bill did not waive an answer on oath, and all three answers were sworn to.

Subsequently, Smith and Springer filed a sworn amendment to their answer, setting up that letters of administration were granted to Springer on the estate of Todd by the Probate Court of Chicot County, on the 4th of August, 1879, and that the demands of the plaintiffs against the estate were not exhibited to the administrator, as required by the statute, before the end of the two years from the granting of the letters.

The question to be decided in this case is exclusively one of fact, and concerns the honesty and validity of the claim of Smith against Todd. The claim is supported by a judgment, a copy of which is contained in the record. The complaint in the suit was sworn to by Smith on the 4th of August, 1876. The account filed with the complaint states that the $8,000 is due for services rendered in the supervision and management of Todd's Yellow Bayou Plantation and his half interest in the Bellevue Plantation, from January, 1869, to date, at $1,000 per annum, and interest. The attachment was levied on the 5th of August, 1876, on cotton and other personal property and on certain land. On the 25th [470] of July, 1877, Todd filed his answer, denying each and every allegation of the complaint, and on that day the case was tried by a jury, which found a verdict for Smith and assessed his damages at $8,000. The burden of proof is on the plaintiffs in this suit to impeach that judgment. We do not think they have successfully done it. It would not be profitable to discuss the evidence.

Much comment is made on the fact that Todd did not plead the Statute of Limitations of the State to a part of Smith's claim. But this is not an objection of which the plaintiffs can avail themselves. Todd was at liberty to waive the plea, and there was evidently sufficient in the relations of the parties and in the circumstances of the case to warrant him in doing so.

We have carefully considered the evidence, and the various propositions advanced by the counsel for the appellants in regard to the facts, and are of opinion that the decree of the Circuit Court was right, and that it must be *affirmed.*

Mr. Chief Justice **Fuller** was not a member of the court when this case was submitted, and took no part in its decision.

UNITED STATES, *Appt.*, [579]
v.
THE MARSHALL SILVER MINING COMPANY ET AL.

(See S. C. Reporter's ed. 579-589.)

Mineral lands—estoppel—canceling a patent—errors and irregularities—suit to set aside patent by United States—when brought—innocent purchaser.

1. When parties have been engaged in a contest, both before the courts and in the land office, with regard to their rights in a deposit of mineral or a lode, and the application of one of them for a patent has been dismissed and he has been put out of court in the pending suit, and there is a right of appeal, it would be inequitable to hold that, after he has acquiesced and remained silent for more than eight years, while the successful party was in

possession of the lode working out its mineral, right in the face of the unsuccessful party, the latter can resume the contest, after such long interval and after the legal title had passed from the United States.

2. A party cannot be permitted to remain silent for more than eight years after he has abandoned the contest and submitted to the decision of the matter at issue, although it may have been erroneous, and then come forward in a court of equity after the title has passed to the United States and seek to correct the errors which may have occurred during the progress of the proceedings in the land office.

3. If the officers of the land department have acted within the general scope of their power and without fraud, the patent which has issued must remain a valid instrument, and the court will not interfere unless there is such a gross mistake or violation of the law which confers their authority as to demand a cancellation of the instrument.

4. Errors and irregularities in entering and procuring title to the public lands ought to be corrected within the land department so long as there are means of revising the proceeding and correcting such errors.

5. A bill in chancery, brought by the United States to set aside and vacate a patent issued under its authority, is not to be treated as a writ of error or as a petition for a rehearing in chancery or as a retrial of the case with additional proof.

6. The conduct of the parties themselves, for whose benefit such action is brought, must be free from fault or neglect.

7. That one of the defendants in such action is an innocent purchaser of the property, is an objection to the granting of such relief.

[No. 17.]

Argued Nov. 20, 1888. Decided March 5, 1889.

APPEAL from a decree of the Circuit Court of the United States for the District of Colorado, dismissing a suit to vacate a patent for a vein or lode of mineral deposit. *Affirmed.*

The facts are stated in the opinion.

Messrs. J. H. Hickcox, Jr., and **James K. Redington**, for the United States, appellant:

A patent for public lands issued inadvertently, by mistake, against or without authority of law, or procured by fraud, may be vacated by suit in equity in the name of the United States.

U. S. v. *Stone*, 69 U. S. 2 Wall. 525 (17: 765); *Hughes* v. *U. S.* 71 U. S. 4 Wall. 232 (18: 303); *Johnson* v. *Towsley*, 80 U. S. 13 Wall. 72 (20: 485); *Shepley* v. *Cowan*, 91 U. S. 330 (23: 424); *Leavenworth, L. & G. R. Co.* v. *U. S.* 92 U. S. 733 (23: 634); *Moore* v. *Robbins*, 96 U. S. 530 (24: 848); *Marquez* v. *Frisbie*, 101 U. S. 473 (25: 800); *U. S.* v. *Atherton*, 102 U. S. 372 (26: 213); *U. S.* v. *Schurz*, 102 U. S. 378 (26: 167); *Moffat* v. *U. S.* 112 U. S. 24 (28: 623); *U. S.* v. *Minor*, 114 U. S. 233 (29: 110); *Mullan* v. *U. S.* 118 U. S. 271 (30: 170); *Maxwell Land Grant Case*, 121 U. S. 325 (30: 949).

A badge of fraud is a fact calculated to throw suspicion upon a transaction and calling for an explanation.

Bump, Fraud. Conv. 31; *Peebles* v. *Horton*, 64 N. C. 374; *Pilling* v. *Otis*, 13 Wis. 495; *Sherman* v. *Hogland*, 78 Ind. 472.

A fraud is the misrepresentation of a material fact, or creation of a false impression, either by declaration, deed or artifice, to mislead another, or cheat him, or obtain an undue advantage (Story, Eq. § 192; *Laidlaw* v. *Organ*, 15 U. S. 2 Wheat. 178, 195 (4: 214); *Pidcock* v. *Bishop*, 8 Barn. & C. 605; *Smith* v. *Bank of Scotland*, 1 Dow, Parl. Cas. 272; *Evans* v. *Bicknell*, 6 Ves. Jr. 173, 182; *State* v. *Holloway*, 8 Blackf. 45; *Taylor* v. *Ashton*, 11 Mees. & W. 401; *Warner* v. *Daniels*, 1 Wood. & M. 108); the suppression or concealment of any material fact which the party is legally, equitably or in good conscience bound to disclose (Story, Eq. §§ 204, 207, 217; 2 Kent, Com. 4th ed. pp. 490, 491; *Evans* v. *Bicknell*, 6 Ves. Jr. 173, 182; *Irvine* v. *Kirkpatrick*, 3 Eng. L. & Eq. 17; *Juzan* v. *Toulmin*, 9 Ala. 662); fraudulent suppression of deeds or other instruments in violation of, or injury to, the rights of others. Story, Eq. §§ 252, 254; *Bowles* v. *Stewart*, 1 Sch. & Lef. 222, 225; *Dormer* v. *Fortescue*, 3 Atk. 124; *Eyton* v. *Eyton*, 2 Vern. 380; *Dalston* v. *Coatsworth*, 1 P. Wms. 733.

Messrs. **R. S. Morrison** and **Simon Sterne**, for appellees:

Plaintiff is barred by limitations and laches.

Hayner v. *Stanly*, 18 Fed. Rep. 218; *U. S.* v. *White*, 17 Fed. Rep. 565; *Ernest* v. *Vivian*, 33 L. J. N. S. Ch. 513; *Twin-Lick Oil Co.* v. *Marbury*, 91 U. S. 587 (23: 328).

No equity in Cayuga, and hence no equity in bill.

Bohall v. *Dilla*, 114 U. S. 47 (29: 61); *St. Louis Smelting & Ref. Co.* v. *Kemp*, 104 U. S. 636 (26: 875).

The supreme court will not entertain an appeal prosecuted, or attempted to be prosecuted, by or on behalf of persons not parties to the record.

Guion v. *Liverpool Ins. Co.* 109 U. S. 173 (27: 895); *Ex parte Cutting*, 94 U. S. 14 (24: 49); *Ex parte Cockcroft*, 104 U. S. 578 (26: 856).

When the United States is a suitor in a court of chancery, it stands upon the same footing as a private individual.

Fink v. *O'Neil*, 106 U. S. 272 (27: 196); *U. S.* *Tetlow*, 2 Lowell, 159; *U. S.* v. *Flint*, 4 Sawy. 42. *Fendall* v. *U. S.* 14 Ct. Cl. 247; *U. S.* v. *White*, 17 Fed. Rep. 561; *U. S.* v. *Colgate*, 21 Fed. Rep. 318; *U. S.* v. *Union Nat. Bank*, 10 Ben. 408.

The Colorado Central Consolidated Mining Company is a *bona fide* purchaser.

Colorado Coal & Iron Co. v. *U. S.* 123 U. S. 307 (31: 182); *St. Louis Smelting & Ref. Co.* v. *Kemp*, 104 U. S. 636 (26: 875); *Steel* v. *St. Louis Smelting & Ref. Co.* 106 U. S. 447 (27: 226); *The Yosemite Valley Case*, 82 U. S. 15 Wall. 77 (21: 82); *Frisbie* v. *Whitney*, 76 U. S. 9 Wall. 187 (19: 668).

Mr. Justice **Miller** delivered the opinion of the court: [582

The case before us originated in a bill in equity brought in the Circuit Court of the United States for the District of Colorado, in the name of the United States of America, by its Attorney-General, and the District Attorney of the United States for that district, against the Marshall Silver Mining Company and the Colorado Central Consolidated Mining Company, defendants.

The purpose of the bill was to set aside and vacate a patent issued by the Government to the Marshall Silver Mining Company, for a vein or lode of mineral deposit, lying in the Griffith Mining District, in the County of Clear Creek, Colorado, known as the "Tunnel Lode, No. 5," dated on the 8th day of June, 1874. Afterwards another patent, including a part of the same land covered by the one just referred to, was issued to McClellan, Rist and Webster,

upon what was called the "Cayuga Lode," on the 31st day of January, 1882.

The grounds which are set up in the bill for vacating the first mentioned patent are mainly such as go to show that its issue fraudulently deprived the holders of the second instrument of the right to the title of so much of the land as is covered by the conflicting boundaries described therein, so that the result of a decree annulling the first patent would be to give to the claimants under the second the paramount [583] title. The circuit court, after hearing the case on the bill, two different demurrers, answers, replication, and a large amount of testimony, dismissed the suit. From that decree the present appeal was taken by the United States.

At the begining of this term the attorney for the Government filed in this court a statement that the United States had no pecuniary interest in the suit, and the officers charged with the conduct of such matters on the part of the Government declined to take any further part in the argument of the case. They did not, however, dismiss the appeal, and made no objection to its prosecution by the private parties interested in the matter, who had conducted the case from its inception. Thereupon a motion was made by the appellees and argued before the court to dismiss the appeal, which was resisted by the counsel interested in the second patent. Under all the circumstances, the court determined to hear it, refused the motion, and, after a thorough argument, the case is now before us for decision.

The charges which are made the basis for the relief sought here may be comprehended under two heads, although they are so mingled together in the bill that it seems doubtful whether they were intended to be considered and treated as separate propositions. The main ground is an allegation of fraud, practiced upon the parties claiming the Cayuga lode, by collusion between those having the management of the claim to Tunnel Lode, No. 5, and certain officers of the Land Department, and particularly the register and receiver of the land office located at Central City.

The material facts are, that the claimants to both of these lodes seem to have been prospecting in that vicinity, and discovered mineral in their different claims about the same time. They each had their claims staked out and surveyed by deputy surveyors of the United States, and about the same time they each made application to the land office for their entry, with a view of obtaining patents therefor. Upon the application being made for a patent upon the Cayuga lode, the Marshall Silver Mining Company, discovering that it interfered with a portion of their claim, brought [584] a suit in the local court of the State, under the Act of Congress on that subject (§ 2326, R. S.) against McClellan, Rist and Webster, asserting the superiority of their claim to a patent for the land in controversy. The statute provides that the judgment in such a suit shall govern the rights of the parties in the land office. This suit was on the docket of the court for some time, perhaps a year or more. In the mean time Rist, one of the parties in interest under the claim to the Cayuga lode, made a disclaimer in the local land office of the proceedings taken by his partners, in the name of McClellan, Rist and Webster, and so far as he was interested in that claim directed the proceedings to be dismissed. Accordingly, the register and receiver of that office made an entry dismissing the claim to the Cayuga lode and the application for a patent thereon, under the belief, as they expressed it, that such was the necessary result of the action of Rist.

One of the questions of fact which is disputed in this case is, whether McClellan and Webster had notice of these proceedings, which resulted in the dismissal of the application for a patent upon the Cayuga claim. This will be considered presently.

Not long after this order was made in the local land office the owners of the Tunnel lode, who had assumed the name, either by incorporation or as partners, of the Marshall Silver Mining Company, dismissed the suit which they had brought in the state court, contesting the right of the Cayuga claimants to a patent for the property in controversy. They obtained from the clerk of the court a certificate of such dismissal, and thereupon proceeded in the prosecution of their claim in the land office, *ex parte*. They procured from the surveyor of the United States, by his deputy, an amended survey of their claim, and it was then allowed by the local officials. It was forwarded by them to the Commissioner of the General Land Office, who, after a full consideration of the subject, occupying nearly a year, issued to the Marshall Silver Mining Company the patent which is now assailed by the bill of complaint in this case. They had before taken possession of the property, and they worked the lode now in dispute for about eight years and a half, [585] without any complaint being made by the claimants of the Cayuga lode. At the end of that time these parties appeared before the Land Department, denied the validity of the order dismissing their claim, and proceeding themselves *ex parte*, without notice to the Marshall Silver Mining Company, procured the patent already referred to, dated January 31, 1882.

The main controversy arising out of this condition of affairs is upon the allegation that Rist was corruptly induced to apply to the register and receiver of the local land office for the dismissal of the claim in which he was an interested party, and that these officers were in collusion with him and the claimants of the Tunnel lode in making the order which they did.

It must be conceded that there is a total failure to establish any such corrupt motive or action on the part of either the officers or Rist. What the motives were which induced Rist to make his application to the officers of the land office is not very plain; but he acted through Mr. Butler, a lawyer of character and reputation, and no evidence was introduced showing that he was imposed upon, misled or bought up. Still less is there any evidence that the register or receiver were bribed or influenced by any improper motives in the action which they took.

It is alleged in the answer that the legal view which these officers took of the matter, that a withdrawal on the part of one of the claimants who had a real interest in the claim required the dismissal of the whole claim, may

have been the law of the case. We do not consider it necessary now to inquire whether such was the law.

It is also alleged in the answer that such had been the course of proceeding in similar cases before that time in the Land Department. We do not know that there is any evidence that such had been the ruling or that a contrary decision had ever been made. At all events, as the case presents itself to us, there is no corrupt or fraudulent motive on the part of these officers shown as a foundation for setting aside this patent. Whether or not there was a mistake made by them in regard to the law of the [586] subject, we do not think it necessary to decide now; nor are we satisfied that, if it was a clear mistake of law by these officers, it was so far an essential element in the final determination of the Commissioner of the General Land Office of the rights of the parties as to invalidate the patent issued as the result of those proceedings.

This point, in our opinion, is relieved of any difficulty by the subsequent conduct of McClellan, Rist and Webster, in regard to the matter, which amounted to an acceptance of the decision of the register and receiver, and an acquiescence in it, that forbids an assertion by them now of a claim which they might have asserted at a previous stage of the transaction. McClellan, and perhaps another of the claimants, lived at Georgetown, Colorado, about twenty miles from the land office at Central City, where all these proceedings were conducted, and some twenty-two miles from the locality where the lodes in question were situated. Although there is some dispute as to whether they received notice of the order dismissing their claim, we are of opinion that the evidence clearly preponderates in favor of the conclusion that they did receive such notice immediately after the order was made.

It appears from the testimony of Arnold, the receiver of the land office at Central City, which is supported by a press copy of a letter, that he notified McClellan & Webster, on April 20, 1878, of the dismissal of the Cayuga claim; and that this notice was given by mail, in conformity with the usual practice of the office at that time. Arnold also testifies that he knows that McClellan received the letter.

The suit in the state court was dismissed by the Marshall Silver Mining Company shortly after the order was made by the local land office dismissing the Cayuga claim. That was a suit in which McClellan and Webster were defendants; it had been progressing for some time, and it is impossible to believe they did not have notice of its dismissal; for ordinary attention to their own interests would have required them to know what was going on in regard to it.

The Marshall Silver Mining Company and the Colorado Central Consolidated Mining Company, to which the former conveyed their in- [587] terest, continued working the mine upon their lode from 1873 until 1882, without any interference on the part of McClellan or Webster; and the former admits that he knew those companies were so working; yet, during all this time, a period of some eight years and a half, they made no objection to such working, although they must have known all that was going on in regard to it. They acquiesced in the proceedings, and made no effort to set aside the patent, or to correct any injustice which had been done them in the proceedings upon which the patent had been issued, while the other parties had full and undisputed possession of the land.

It may be said that they could not help themselves, and that this silence and inaction on their part did not imply acquiescence. But they had the right to appeal to the Commissioner of the General Land Office from the order of the register and receiver dismissing their application. This was not done, and it never has been done. When parties are engaged in a contest, both before the courts and in the land office, with regard to their rights in a deposit of mineral or a lode, in both of which tribunals action has been taken, putting one party entirely out of court in the pending suit, and dismissing the same party's application for a patent, and there is a right of appeal, it would be a most inequitable rule to hold that, after he has acquiesced and remained silent for more than eight years, while the successful party is in possession of the lode in controversy, working out its mineral, right in the face of the unsuccessful party, the latter can resume the contest after this long interval, and after the legal title has passed from the United States. Under the decisions made by this court there is no doubt that the legal title to this mineral land did pass from the United States by the first patent. *U. S.* v. *Schurz*, 102 U. S. 378 [26: 167].

All the errors and irregularities which occur in the process of entering and procuring title to the public lands of the United States ought to be corrected within the Land Department, which includes the authority vested in the Secretary of the Interior, so long as there are means of revising the proceedings and correcting these errors. A party cannot be permitted to remain silent for more than eight years after he has abandoned a contest and submitted to [588] the decision of the matter at issue, although it may have been erroneous, and then come forward in a court of equity, after the title has passed from the United States, and seek to correct the errors which may have occurred during the progress of the proceedings in the land office. If the officers of that department of the Government have acted within the general scope of their power, and without fraud, the patent which has issued after such proceedings must remain a valid instrument, and the court will not interfere, unless there is such a gross mistake or violation of the law which confers their authority as to demand a cancellation of the instrument.

We see no such gross mistake in the present case, but do think there is such laches as amounts to acquiescence in regard to the proceedings before the Land Department, as to which error is charged, and precludes the interference of a court of equity to annul or set aside the patent issued in 1874.

We have recently had before us a number of this class of cases, in which the attempt has been made to invalidate by a decree of the court patents which have been issued by the Government of the United States to private parties. There has been such frequent occasion to consider the subject that it would be only a repe-

tition to go over the ground again. This whole question was very fully reviewed during the present term of the court in the case of *United States* v. *Iron Silver Mining Company*, 128 U. S. 673 [*ante*, 571], in the opinion delivered by *Mr Justice* Field, in which the various decisions were re-examined with care.

The more important of these cases are *Maxwell Land Grant Case*, 121 U. S. 325 [30: 949]; and *Colorado Coal & Iron Co.* v. *United States*, 123 U. S. 307 [31: 182]. To these may be added *United States* v. *San Jacinto Tin Co.* 125 U. S. 273 [31: 747]; and *United States* v. *Beebe*, 127 U. S. 338 [32: 121].

Some point is made, in the bill and in the argument, concerning the amended survey of the Tunnel lode claim, and the manner of its presentation to the Commissioner of the General Land Office, with other irregularities which are suggested and pointed out; but we think it [589] must be taken to be the settled doctrine of this court that a bill in chancery, brought by the United States to set aside and vacate a patent issued under its authority, is not to be treated as a writ of error, or as a petition for a rehearing in chancery, or as if it were a mere retrial of the case as it was before the land office, with such additional proof as the parties may be able to produce.

The dignity and character of a patent from the United States is such that the holder of it cannot be called upon to prove that everything has been done that is usual in the proceedings had in the Land Department before its issue, nor can he be called upon to explain every irregularity or even impropriety in the process by which the the patent is procured. Especially is it true that where the United States has not received any damage or injury, and can obtain no advantage from the suit instituted by it, the conduct of the parties themselves, for whose benefit such action may be brought, must itself be so free from fault or neglect as to authorize them to come, with clean hands, to ask the use of the name of the Government to redress any wrong which may have been done to them.

One matter which has been much discussed before us is, whether the Colorado Central Consolidated Mining Company, one of the defendants in this suit, and the present owner of such title as passed to the Marshall Silver Mining Company by the patent sought to be vacated, is an innocent purchaser of the property in ignorance of any of the matters set up by the complainants. While it is not necessary to pass upon this subject in the view we have taken of the case, it is not improper to say that, as presented to us, the claim of that company to be an innocent purchaser presents a very formidable objection to the granting of the relief asked for in a court of equity.

The decree of the Circuit Court for the District of Colorado is affirmed.

---

[530] GEORGE M. PETERS, *Appt.*,

v.

THE ACTIVE MANUFACTURING COMPANY.

(See S. C. Reporter's ed. 530-541.)

Letters patent—metallic moldings—infringement.

1. Noyes' machine for putting metallic moldings upon combs was in use more than three years before the date of plaintiff's invention for attaching sheet metal moldings, and the former anticipates the latter.

2. The only difference between Noyes' device and that of the plaintiff is that in Noyes' the stock holds the molding stationary while the comb is forced into the molding by the action of the follower; but its action is substantially the same as that of the stock in the plaintiff's patent.

3. The third claim of plaintiff's patent is not infringed because, in defendant's apparatus, no washers are used for adjustment.

[No. 65.]

Argued Jan. 25, 1889. Decided March 5, 1889.

APPEAL from a decree of the Circuit Court of the United States for the Southern District of Ohio, dismissing a suit for infringement of letters patent No. 178,463, granted June 6, 1876, to the plaintiff, George M. Peters, for an improvement in tools for attaching sheet metal moldings. *Affirmed.*

The facts are stated in the opinion.

Mr. **Benjamin Butterworth** for appellant.

Mr. **Arthur Stem** for appellee.

Mr. Justice **Blatchford** delivered the opin- [531] ion of the court:

This is a suit in equity, brought in the Circuit Court of the United States for the Southern District of Ohio, in January, 1882, by George M. Peters against the Active Manufacturing Company, for the alleged infringement of letters patent No. 178,463, granted June 6, 1876, to the plaintiff, George M. Peters, for an improvement in tools for attaching sheet metal moldings, on an application filed March 7, 1876.

The specification, drawings, and claims of the patent are as follows:

"My invention comprises a peculiarly constructed sheath or holder, wherewith the ornamental molding on the top of the carriage dashes may be applied in the most expeditious manner, and without bending or buckling, or otherwise injuring or marring either said molding or its supporting dash board.

"In its preferred form, said sheath consists of a two-part holder or receiver, connected together with bolts and washers, and provided with a longitudinal groove or channel of such size and shape as to readily inclose the molding that is to be applied to the upper edge of the dash, a key or other suitable stop being fitted [532] within the sheath, to prevent the molding slipping through said longitudinal groove when the device is in use.

"The sheath is rendered capable of carrying moldings of various lengths and sizes by an arrangement of adjusting devices whose details of construction will be hereinafter more fully explained.

"In the accompanying drawing, forming part of this specification, Figure 1 is a perspective view of a two-part sheath in an inverted position, the middle portion and rear end of the device being broken away. Fig. 2 is a perspective view of the molding detached from sheath. Fig. 3 is a plan showing the molding located within the sheath. Fig. 4 is a longitudinal section through the rear end of the sheath, with a screw stop for the molding to bear against. Fig. 5 is a transverse section at the line *x x*, showing the molding incased within the sheath; and Figs. 6 and 7 represent modifications of the holder.

"A and B represent two metallic bars of any appropriate size and having their lower outer edges slightly beveled off at *a* and *b*. These bars are maintained in a parallel position with reference to each other by means of bolts or screws C and washers or fillings D. Instead of washers and bolts or screws C, the bars may be maintained in parallel position, and separated or brought nearer together, by means of right-and-left screws, the right-hand thread of said screw engaging a female screw in one bar, and the left-hand thread engaging a female screw in the other.

"The bar A has a longitudinal groove, E, formed along its inner surface and near the lower edge of said bar. E′ is a precisely similar groove made in the other bar, B, and when the two members A B of the sheath are joined together the grooves E E′ form a channel that is approximately circular in its transverse section.

"F represents a hook, shackle, or link, pivoted to the front end of the sheath and guttered at *f*, to avoid contact with the upper edge of the dash.

"The bars are furnished with undercut notches *g g′* to receive a detachable key, G, which latter serves as a stop or abutment for the rear end of the molding to rest against. A series of similar notches may be made in the bars A B at such distances from the front end of the sheath as will correspond with the various lengths of moldings; or, if preferred, the notches and key may be dispensed with, and a screw, H, may be arranged for the molding to bear against, as seen in Fig. 4. This screw may be adjusted out or in to agree with the length of molding.

[534]

[533]

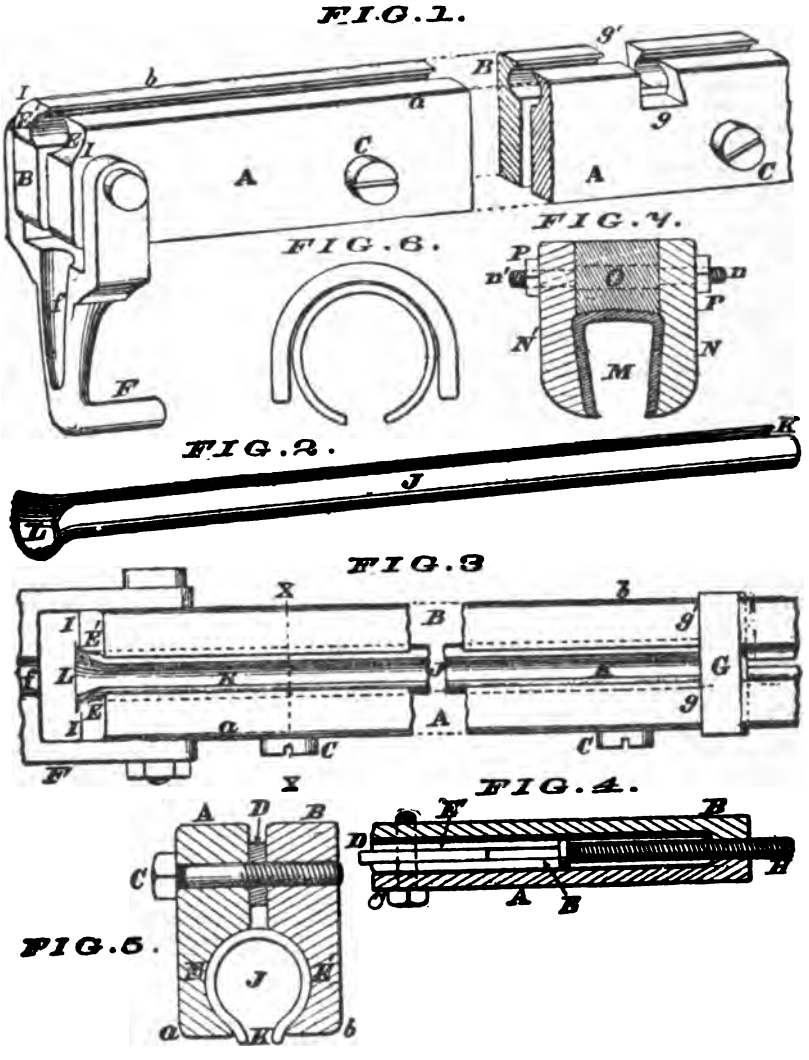

"The advancing end of the sheath is rounded off at I, so as not to tear up the leather coverings of the dash while the molding is being applied. The molding consists of a sheet metal tube, J, having a longitudinal slot or parting, K, and a flaring or trumpet-mouthed end, L.

This trumpet mouth is located at the forward end of the molding.

"As represented in Fig. 7, the sides of the molding M are straight and have an outward flare, the top of said molding being somewhat crowning. This illustration shows a three-part sheath, the two outer bars N N′ being secured to the central member O by right and left hand screws *n n′* and nuts P. Fig. 6 represents the sheath as made of a single piece of metal or other suitable material.

"Previous to using the sheath the key G is first inserted in the notches *g g′*, at such a distance from the end I as will correspond with the length of molding J, which latter is then slid into the groove E E′, the rear end of said molding being brought in contact with the vertical edge of said key. When thus located within the sheath the flaring mouth L of the molding has a slight projection beyond the chamfered end I of the bars A B, as represented in Fig. 3. The carriage dash is then held perfectly rigid, and the upper margins of the coverings of the same are inserted in the flaring end L of the molding, after which any suitable power is applied to the hook F to draw the sheath along the top of said margins or projections. As the sheath advances the flaring mouth serves to conduct the leather margins into the slot K of the molding, and as the grooves E E′ prevent any radial distension of the tube J, it is evident that the molding is caused to embrace said margins in the most uniform and secure manner. [535] After the molding has traversed the entire length of the dash the sheath can then be retracted, thereby leaving the tube J in its proper position upon the dash, the flaring end L being either filed off or else disposed of in any other suitable manner. During the progress of the sheath along the top of dash, the molding is impelled forward by the key G, and consequently no strain whatever is brought to bear upon the flaring end L of the tube.

"As a considerable degree of force is required to anchor the molding J securely to the leathern margins, it is evident that the driving action of key G would have a tendency to buckle said tube; but this defect is obviated by making the channel of the sheath of such capacity as to allow a pretty snug fit of the molding within it.

"When a longer molding is to be applied to a dash, the key G is driven out and inserted in another set of notches nearer the rear end of the sheath; or the same results may be effected by causing the molding to abut against the end of screw H, the latter being adjusted either out or in, so as to agree with the length of molding that the sheath is to carry. The width of channel E E′ may be increased, to receive a molding of greater diameter, by removing washers or filling, and inserting thicker ones in their place, or by turning the right and left hand screws, where the latter are employed.

"It is preferred to make the sheath of two pieces, on account of the facility of grooving them; but it is evident the holder may be made of a greater or less number, if desired. (See Figs. 6 and 7.) It is also preferred to have the sheath embrace the molding as completely as possible, so as to bring the lower edges of the bars A B near the parting K, and thereby prevent any spreading of the tube at said slot; but if the tube is sufficiently stiff to prevent such spreading, the sheath need not surround the molding so completely. This modified form of sheath is shown in Fig. 6.

"Furthermore, the sheath may be composed of wood lined with a metallic bushing. It is evident that this form of sheath may be advantageously employed for attaching sheet-metal moldings for tubes to various articles; and I reserve the right to use it for any and every purpose that it is capable of.

"What I claim as new, and desire to secure [536] by letters patent, is—

"1. A sheath for applying metallic moldings, said sheath being furnished with a stop for advancing the molding, all substantially as and for the purpose specified.

"2. The within described sheath for applying metallic moldings, said sheath being furnished with recesses *f′ g′*, and a key, G, or their equivalent stops, as and for the purposes explained.

"3. A sheath composed of two grooved bars A E B E′ bolts or screws C, and washers D, whereby the sheath is rendered capable of adjustment to contain moldings of different diameters, as herein set forth.

"4. The combination of bars A E B E′ and guttered hook or shackle F *f*, for the object stated."

Infringement is alleged of claims 1, 2 and 3.

The defenses insisted upon are want of invention, want of novelty, and non-infringement of claim 3.

The substance of the invention set forth in the specification is the use of a sheath or holder or receiver, having in it a longitudinal groove or channel, in which is placed the molding that is to be applied to the upper edge of the dash board, the sheath or holder, when pulled, drawing with it the molding over the upper edge of the dash board, and the key or stop being fitted within the sheath or holder to prevent the molding from slipping through the groove. One useful effect of the sheath is to support the molding laterally, and prevent it from bending or buckling, or injuring the dash board. Claim 1 covers the use of a sheath furnished with a stop, which operates to prevent the further advancing of the molding when it reaches the stop. Claim 2 covers the use of a sheath with a stop formed by means of notches or recesses, and a detachable key to be inserted in the notches. Claim 3 covers a sheath composed of two grooved bars, parallel to each other, and having bolts or screws connecting them, and washers between them, so as to render the apparatus capable of being adjusted to contain moldings of different diameters.

The circuit court entered a decree dismissing the bill, from which the plaintiff has appealed. The opinion of that court, reported in 21 Fed. [537] Rep. 319, says in regard to claims 1 and 2: "The respondents' evidence establishes that, as early as September, 1867, Joseph P. Noyes, a manufacturer of combs at Binghamton, New York, used a machine for putting moldings on combs, in which the molding was held in a sheath fitting it closely, and having an extension enough smaller to fit the comb. In this extension there was a sliding follower fitted to abut against the end of the comb. At the ex-

treme opposite end of the larger part of the sheath there was a slot across the sheath, containing a key or stop to prevent the sliding of the molding. The follower was attached to a slide and lever, so that when a molding was laid in the larger part of the sheath and the comb in the smaller part, the comb being prevented from bending by the walls of the sheath, could be forced into the molding by the action of the slide and lever upon the follower, the molding being prevented from bending by the walls of the part of the sheath within which it was placed. This machine was in use more than three years before the date of the complainant's invention. That this was a comparatively small machine and used only for applying moldings to combs, is not material. *Woodbury Planing Machine Co.* v. *Keith*, 101 U. S. 490 [25: 945]. Nor is it material that the groove or gutter was so open in cross section that the molding could be dropped into it. Fig. 6 of the drawings accompanying the letters patent issued to complainant shows a sheath of like shape, and is referred to in the specifications as a modified form of the sheath patented, and the claim is so broad as to cover any sheath, of any material, shape, or size, for applying moldings to any article. There is nothing more in the sheath patented to the complainant than an adaptation of the sheath used at Binghamton to the application of moldings to carriage dash boards—an adaptation which would have occurred to a skilled mechanic without the exercise of the inventive faculty. Had the complainant's invention been first in time and patented, the Binghamton sheath would have been an infringement; and, conversely, had the Binghamton sheath been patented, the complainant's would have been an infringement. That which infringes, if later, would anticipate, if earlier." We concur in these views.

[538] The affirmative evidence on the part of the defendant, in regard to the Noyes apparatus, consists of the testimony of Noyes and Yingling, their testimony having been taken in August, 1882. Noyes testified that he had been engaged in making combs, at Binghamton, Broome County, New York, since 1860, and had, since 1864, made combs with metallic moldings for stiffening the backs. He produced one of such combs, marked A, and one of such moldings, marked B. He further testified as follows: "*Q.* 6. State whether or not you have ever used any machinery for putting these moldings on combs. *Ans.* I have. *Q.* 7. Can you describe any of the machines used by you for putting moldings on combs? *Ans.* Yes. I have one machine in which the molding is held in a groove, which fits it closely, and the same groove has an extension enough smaller to fit the comb closely; and in this extension there slides a follower, which is fitted to abut against the end of the comb. At the extreme opposite end of the larger part of the groove there is a slot across the groove, containing a key or stop to prevent the molding sliding through the groove. The follower before mentioned is attached to a suitable slide and lever, so that when a molding is laid in the larger part of the groove, and the comb in the smaller part, the comb, being prevented from bending by the walls of the the groove, can be forced tightly into the molding, by the action of the follower and its connected parts, the molding being, at the same time, prevented from bending by the walls of the larger part of the groove. *Q.* 8. Can you produce a drawing illustrating the machine above described and its operation? *Ans.* I here produce a drawing which illustrates said machine. In this drawing, figure 1, A represents the main body of the machine. In the part A is the groove C and its smaller extension D, in which are placed the molding and the comb, as described in my previous answer. O represents the slot in which is placed the key, marked figure 2. E, figure 1, represents the follower B, the slide of which the follower forms a part; L, K, M, and H the lever and connecting parts by which E and B is operated. Figure 3 shows an end view of the slide and follower. *Q.* 9. Into which of the grooves do you place the metallic molding? [539] *Ans.* Into the groove C. *Q.* 10. And into which the comb? *Ans.* Into the groove D. *Q.* 11. In use, the key or stop, figure 2, is placed in the slot O to prevent the metallic molding sliding, is it not? *Ans.* It is. *Q.* 12. State whether the groove C in the sheath A effectually prevents the metallic molding from bending as it is forced over the back of the comb. *Ans.* It does. *Q.* 13. State how long you have used the above described machine for putting metallic moldings on combs in the manner described. *Ans.* Since September, 1867. *Q.* 14. Can you fix the date by any positive evidence besides your memory? *Ans.* I can; I have referred to the time book of the men who made the machines, and find the machine to have been finished at the date named, and remember that it was put into immediate use. *Q.* 15. Has it been used ever since? *Ans.* It has been in continued use ever since without any alteration. *Q.* 16. Have you ever made any effort to keep its use a secret, or has it always been open to the inspection of any person who might come into your shop? *Ans.* I have made no effort to keep it secret, but the shop has always been open to visitors, and anyone could see the machine who cared to look at it." The drawing so produced, marked C, shows a machine substantially like that of the plaintiff.

Yingling testified that he was, at the time of testifying, in the employ of Noyes, and, since 1868, or for about fourteen years, had used a machine like that shown by the drawing C, above referred to, for putting metallic moldings upon combs.

Noyes had stated, on cross examination, in answer to a question as to who made the machine he had described as made in 1867, that William Knopp and his son were in his (Noyes') employ as machinists at that time, and worked some on it; that his time book, kept at that time, which he had consulted, contained a record of the fact that Knopp and his son so worked on the machine; and that the machine was built during the first week in September, 1867. In rebuttal, the plaintiff examined as witnesses William Knopp and three persons named Newman, Coyle and McAuley.

Knopp testified that he was employed in Noyes' comb factory from 1865 to 1869, and [540] was familar with the kind of machinery manufactured by them during that time, for use in their comb factory. He then proceeded: "*Q.*

5. In September, 1867, or at any other time, did you make machinery for putting metallic backs on combs? *A.* I did. *Q.* 6. Without going into detail as to the kind you did make, I will ask you whether, in September, 1867, you made, or helped to make, a machine for putting moldings on the backs of combs, where the molding is held in a groove which fits it closely, and the same groove has an extension enough smaller to fit the comb closely, and in this extension there slides a 'follower,' which is fitted to abut against the end of the comb. At the extreme opposite end of the groove there is a slot across the groove, containing a key or stop, to prevent the molding from sliding through the groove. The follower is attached to a suitable slide or lever, so that, when a molding is laid in the larger part of the groove, and the comb in the smaller part, the comb is prevented from bending by the walls of the groove, and can be forced tightly into the molding. by the action of the follower and of the connecting parts? *A.* I do not remember that I made anything of that kind. *Q.* 7. Did you at any other time make such a machine? *A.* I don't remember that I did. *Q.* 8. Please examine the comb I now hand you, and state whether Noyes, Bros. & Co., at that time when you worked for them, and since, manufactured a comb with metallic back similar to this one, and, if so, state how said metallic back was put on the comb? (Comb marked Exhibit A shown witness and offered in evidence by solicitor for complainant.) *A.* They manufactured a comb in general appearance similar. The metallic back was put on and fastened to the comb by compression. The back was compressed in a vice to make it fit in a groove in the comb tightly. The molding was placed on the comb by hand, and then put in a vice, and the molding pressed up tightly against the comb. *Q.* 9. Do you remember working on or making machinery for compressing the molding on the comb, as above described? *A.* I do. *Q.* 10. Is the mode above described the only way Noyes, Bros. & Co. put metallic moldings [541] on that kind of a comb? *A.* It is. *Q.* 11. You was familiar at that time with the mode employed by them for putting moldings on combs, was you? *A.* I was.

This testimony of Knopp is very inconclusive. He merely testifies, thirteen years after he had left Noyes' establishment, that he does not remember that he made, fifteen years before the time when he was testifying, a machine like that described in question 6 put to him. The drawing produced by Noyes was not shown to Knopp.

The testimony of Newman, Coyle and McAuley amounts to nothing. Although they were employed in the comb factory of Noyes at the time they gave their testimony, in December, 1882, and had been employed there, Newman from 1862, Coyle for fourteen or fifteen years, and McAuley for about thirty years, neither of them was shown the comb A, nor the molding B, nor the drawing C, above mentioned, nor was a distinct question put to either of them as to the use of a machine like that described in question 6 put to the witness Knopp.

The only difference between Noyes' device and that of the plaintiff is, that in Noyes' the stop holds the molding stationary while the comb is forced into the molding by the action of the follower. But its action is substantially the same as that of the stop in the plaintiff's patent, which prevents the molding from slipping through the groove.

The case falls within the principle applied in *Pennsylvania Railroad Company* v. *Locomotive Truck Company*, 110 U. S. 490 [28: 222], and cases there cited.

As to the third claim, it is not infringed, because, in the defendant's apparatus, no washers are used for adjustment.

The decree of the Circuit Court is affirmed.

GEORGE M. PETERS, *Appt.*, [541]

v.

JULIUS A. HANSON ET AL., Partners Under the Firm Name of HANSON, VAN CAMP & Co.

(See S. C. Reporter's ed. 541-557.)

Letters patent—want of invention—old devices

1. Claims 1, 2 and 3, of patent No. 213, 529, granted to George M. Peters for an improvement in vehicle dashes, are merely applications of old devices to new uses, not involving invention.

2. There was no invention in providing the bearing mentioned in the fourth claim of that patent, to strengthen the frame in that part by which the dash is to be connected to the foot of the vehicle.

3. The improvements covered by claims 1, 2, 3 and 11 of reissue No. 9891 of letters patent to the plaintiff for improvements in vehicle dash frames amount only to applications of old devices to new uses, not involving invention.

[No. 66.]

Argued Jan. 25, 28, 1889. Decided March 5, 1889.

APPEAL from a decree of the Circuit Court of the United States for the District of Indiana, dismissing a suit for the infringement of two letters patent, granted to George M. Peters, the plaintiff, namely: letters patent No. 213,529, granted March 25, 1879, for improvement in vehicle dashes, and reissued letters patent No. 9891, for improvement in vehicle-dash frames. *Affirmed.*

The facts are stated in the opinion.

Messrs. **Wm. Hubbell Fisher** and **Benjamin Butterworth** for appellant.

Mr. **Arthur Stem** for appellees.

Mr. Justice **Blatchford** delivered the [542] opinion of the court:

This is a suit in equity, brought by George M. Peters, in the Circuit Court of the United States for the District of Indiana, against Julius A. Hanson and Cortland C. Van Camp, for the alleged infringement of two letters patent granted to George M. Peters, the plaintiff, namely: letters patent No. 213,529, granted [543] March 25, 1879, for an improvement in vehicle dashes, on an application filed June 19, 1875, and reissued letters patent No. 9891, for improvements in vehicle dash frames, granted October 11, 1881, on the surrender of original letters patent No. 224,792, granted February 24, 1880, on an application filed May 5, 1879, the reissue having been applied for June 15, 1881.

The answer sets up as to both patents want of novelty and patentability, noninfringement, and the invalidity of the reissue, because it has

been expanded beyond the invention discloted in the original patent, and contains new matter not found in that patent, and is for a differens invention.

There was a replication to the answer, proofs were taken, and the circuit court dismissed the bill. The plaintiff has appealed from the decree. We are not furnished with any opinion given by the circuit court stating the ground for its action, but it said, in the brief for the appellant, that the ground was that the inventions were not patentable.

So much of the specification of No. 213,529, as is material, and the drawings referred to in it, are as follows:

"My invention relates, . . . secondly, to the attachment of the dash to the vehicle; and this part of my invention renders the dash capable of attachment to vehicles of different widths, so that it can be sold as an article of manufacture, for application to the vehicle by the purchaser. These features of my invention render the construction easy, expeditious, and economical. Another feature of my invention consists in such a novel construction of the dash as that there shall be at the part of the frame thereof to which the laterally adjustable foot is to be attached a proper bearing surface for the support and bracing of the dash.

"In the accompanying drawings, which form a part of this specification, Figure 1 is a perspective view of sufficient of a vehicle to illustrate my invention; Fig. 2, a sectional detached view; Figs. 3 4, 5, 6, 8, detached views illustrating modifications; and Fig. 7, a detached perspective view.

"One mode of making the dash frame is shown in the drawings, in which G F are par- [544] allel uprights at each end, C D E parallel cross rods, and M L short continuations of the rods G F . . . In order to connect the frame to the vehicle, and further to permit a frame to be applied to vehicles of different sizes, I construct the frame and the foot H so that, by a lateral adjustment in relation to each other, the desired connection to bodies of different widths may be effected. The frames may be varied in construction to effect this result. Thus, in Figs. 1 and 2 the frame has a wide bearing piece, N, of any desired length, with a slot to receive the fastenings of the foot or attachment H, by which the dash and the body of the vehicle are connected adjustably, so that, within the limits of the adjustment, the foot secured to the dash may find its bearings on bodies of various widths. The foot may be of any desired shape, being shown with two branches, *b d*, one bolted or otherwise secured to the dash and the other to the body I of the vehicle. By the above described means the dashes may be furnished to the trade as independent articles of manufacture, as the foot may be fitted to vehicles in the process of construction or afterward, and the dash secured without altering or moving it. For the like reason the feet adapted to the vehicles and dashes may be sold separately.

"The bearing N for the attachment or foot may be within the frame, as shown in Figs. 1, 2, 3, 4 and 8, or it may be in an extension outside of the frame, the result being the same—*i. e.*, the frame being adapted to be secured without change to bodies of different widths. This bearing portion N may be secured permanently or detachably to the frame bars. Thus in Figs. 1 and 2 it is provided with sockets for the reception of studs at the ends of the bars. In any case it affords a strong and rigid connection between the foot and the frame, so that the latter cannot be bent over under anything less than destructive pressure. This is especially the case when both uprights, F and G, are secured to the bearing piece N, whether within or without the frame proper; but when within the frame, and extending up between the uprights, it stiffens and braces the latter.

"The adjustment of the dash and foot is not necessarily limited to the mode described. For instance, it may be effected by means of a series [546] of holes, affording a means of adjusting the foot at different points. When the foot is not required, the dash may be connected directly to the body with like advantage, as the points of connection may be varied to suit bodies of different widths.

"The feature of lateral adjustability set forth therein is applicable to dashes and feet, or equivalent laterally adjustable attachments, other than those particularly herein described."

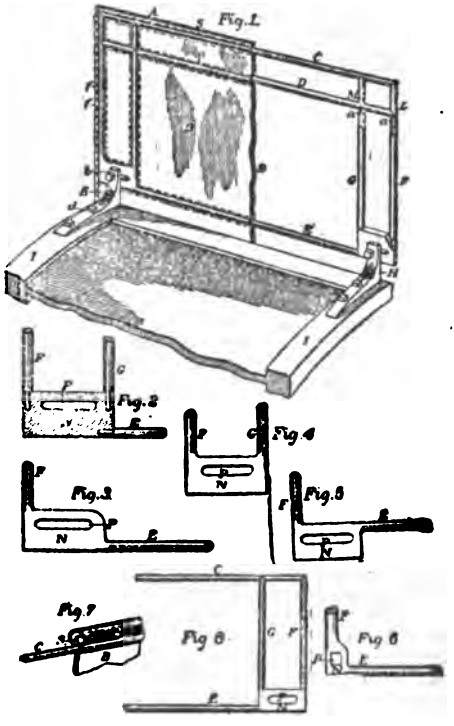

[545]

There are eight claims in the patent, the first four of which alone are alleged to have been infringed, namely:

"Without confining myself to any special mode of connecting the foot and dash adjustably, I claim—

"1. The combination of a dash and laterally adjustable attachments, whereby the same may be connected to vehicles of different widths, substantially as set forth.

"2. A dash or dash frame having slots or

openings, whereby attachments may be made at different points, substantially as and for the purposes set forth.

"3. A dash provided with bearings having slots or openings, substantially as and for the purpose specified.

"4. A dash frame provided with bearings, arranged to strengthen the frame in those parts whereby the dash is to be connected to the laterally adjustable feet or to the vehicle."

So much of the specification of reissue No. 9891 as is material, and the drawings referred to in it, are as follows:

"One object of my invention is a novel construction of the dash frame whereby the latter is rendered light and strong, can be manufactured with little expense; and whereby the various portions of the frame are cheaply, readily and firmly secured together; and also whereby the dash is cheaply, quickly, and firmly connected to a permanent or detachable portion of the vehicle. Another object of my invention is a formation of a dash foot for connecting a dash to a vehicle whereby the foot is at once strong and light and can be cheaply manufactured.

"Referring to the drawings forming part of this specification, figure 1, A, B, C and D represent a dash frame constructed in accord- [547] ance with my improvements, a section through the channeled lower rail of dash, and a sectional and perspective view of my special form of bar. Fig. 2, E and F are a perspective and sectional view of a modification of the mode of attaching the bar to the lower rail of the dash where said lower rail is channeled only on one side, and G is a perspective view showing a portion of the lower rail channeled only on one side and a channeled foot of my invention attached thereto, showing manner of attaching the foot to the lower rail by a T headed bolt. Fig. 3, H, I, Fig. 4, J, K, and Fig. 5, L, M, are sectional views, showing different modes of attaching the foot to the lower rail of the dash. Fig. 6 is a perspective view showing how the extension *e* of the upper bar may be riveted to the thin web or channeled portion of the lower rail. H', Fig. 1, represents the lower rail of a dash frame, channeled as shown at B. This rail is provided at either end with the slot *a* or the holes *d* for attaching the feet to the dash frame. The lower ends of the upright bars of the frame are split and each half provided with a T head. (Shown at D, Fig. 1.) These T heads are made of the same width as the channel in the lower rail into which they fit. The two halves of this split end are separated from each other to admit the lower rail between them. The upper ends of the upright bar are provided with notches *d*, for the reception of the upper rail of the dash frame. . .

"By constructing dash frames in the manner described much of the expense incurred in the ordinary mode of manufacture is saved. The lower rail is made broad and flat, so that the slot *a* or holes *d* can be made therein and leave a strong bearing for the attachment of the feet. .

"The wide vertical flat faces of the lower rail afford a desirable bearing for the dash foot or vehicle body (as the rail can be readily perforated for bolts or rivets, and the thick edges left above and below the perforations are first rate bearings for said foot or body), and possess great advantages over the customary convex or oval rails, the central portion of which, being thick, renders them hard to punch, and the edges afford no flat surface for said foot or body to press against. The rail, therefore, when more or less flat on one or both sides, be- [549] comes a modification of the forms of rails shown herein and possesses some of their advantages.

"Irrespective of the comparative advantages derived from the bearings being flat over being otherwise shaped, the following, among other advantages, obtains, viz.: that the web allows the rail or bar to be readily and quickly perforated, the thick parts, however shaped, connecting said web serving as supports or bearings for the attachment of the foot or other portion of the vehicle to which the dash is connected. . .

"G, Fig. 2, is a perspective view of the under side of my channeled or concave foot. . . The foot may be channeled or concaved on the opposite side to that shown and described herein, or on both sides, these forms of construction being both obvious equivalents of the one shown and described. The depth and the length of the channel or concavity in the dash rail or foot may be varied to suit the requirements of the manufacturer. Another advantage of that portion of my invention which relates to channeling or recessing the foot is that the same may be readily cast of malleable iron, the channeling obviating the injurious effects arising from the presence of shrunken corners in thick malleable iron castings. The channeling or recessing of the foot enables the latter to be made light and thin and to be better annealed."

[548]

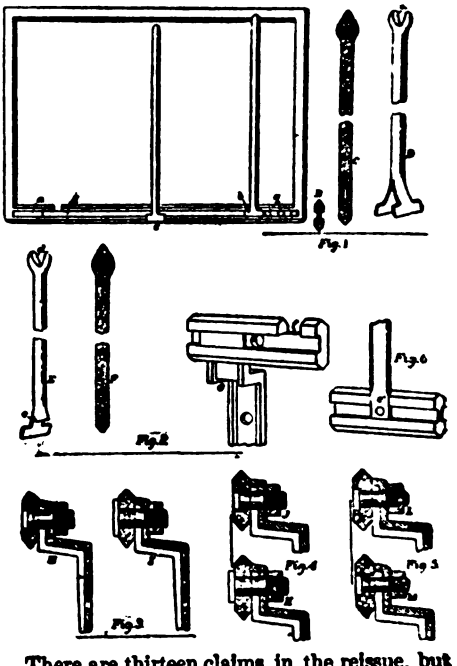

There are thirteen claims in the reissue, but only claims 1, 2, 8 and 11 are alleged to have

been infringed. Those claims are as follows:

"1. A vehicle dash whose lower bar is provided exteriorly with a channel or recess, the metal on either side of the channel or recess affording a bearing for the dash foot or other portion of the vehicle to which the dash is connected, for the purposes specified.

"2. A dash whose lower rail is composed, near or at the ends, of two thick portions united by an easily perforated web, for the purposes specified.

"3. A dash provided with a rail having vertically flat sides, one or both of said sides being exteriorly channeled, substantially as and for the purposes specified."

"11. The foot channeled on either or both sides, substantially as and for the purposes specified."

[550] We will first consider claims 1, 2, 3 and 4, of No. 213,529. Claims 1, 2, and 3 relate to the means of adjusting laterally the feet of a dash. Formerly the feet which connected the dash to the body were welded to the frame of the dash and made solid with it. When a manufacturer made both the dash and the body, he welded the feet of the dash to the frame at such points as were proper for the particular body for which the dash was designed. In the course of business, it came to pass that dashes were made by other persons than the manufacturer of the carriage, who either made his carriage body, or bought it from some person other than the manufacturer of the dash. Under such a course of business, if the feet of the dash were welded to and made solid with the dash frame, they might not fit the various sizes of carriage bodies. Hence arose the idea of making the feet separate and not welding them to the dash, but attaching them thereto by a bolt and nut at the proper point. As the dash is covered with patent leather, it is not convenient to bore through its iron frame after that frame is covered and in the hands of the carriage maker. Therefore, a hole was bored in the lower rail of the frame of the dash, before it was covered, to receive the bolt by which the foot was to be attached to the frame. But, as vehicles varied in width and shape, it was necessary to place the feet sometimes nearer together, and sometimes farther apart from each other. Therefore, two holes, one on each side, in the frame of the dash, for receiving each a bolt, would not always be in the most convenient places. So it became obvious that it would be proper to make two holes or even more, on each side, so that if one hole did not come at the right point another would. Carrying out the same idea, it would be obvious that the bits of metal left laterally between the holes might be cut away, and thus a slot be made or a long hole instead of two or more round ones, admitting of the more perfect adjustment of the place of attachment of the feet to the frame of the dash. It certainly required no invention to put two holes or a slot in the rail of a dash, instead of one hole, for the purpose indicated.

The use of a bolt passing through a hole and [551] secured by a nut, to fasten one article of iron to another, was a well known device; and so was the use for the same purpose of a slot which admitted of the adjustability or change of position of the bolt. The specification of the patent states that "the adjustment of the dash and foot is not necessarily limited to the mode described," but that "it may be effected by means of a series of holes, affording a means of adjusting the foot at different points."

The testimony of Mr. Wood, an expert for the defendants, on the subject of the state of the art in that regard, is as follows: "*Q.* 21. State whether or not there is anything novel in mechanics in the use of slots for the purpose of adjustment. *Ans.* 21. No; there is nothing novel about adjustable slots, elongated slots, or holes bored extra large for that purpose. *Q.* 22. State, if you know, how long and in what manner and for what purposes adjustment has been accomplished by means of slots. *Ans.* 22. Well, any kind of mechanical work that has to be put together so as to be adjusted or duplicated in case of breakage—as, for instance, railroad iron. The butt ends are held together by bolts passing through elongated slots, so that the expansion and contraction of the rail will admit of self adjustment; in fact, slots were a well known mechanical principle, which has been used from a mouse trap to a locomotive, you might say. *Q.* 23. In the ordinary railroad iron is or is not the T rail channeled? *Ans.* 23. Yes, sir; T channeled. *Q.* 24. Are or are not the slots of which you speak as provided for adjustment made in the web of the rail? *Ans.* 24. They are. *Q.* 25. Name some of the familiar uses in mechanics of slots for the purposes of adjustment, and describe the manner of their use. *Ans.* 25. They are so generally used in the construction of everything that is made of iron, or that iron is used in the construction of, that it would be almost impossible to pick out anything they were not used in for the purpose of adjustment. *Q.* 26. Well, can't you name some of the familiar uses? *Ans.* 26. Bridge work, jail work, vehicles, dashes, tops. *Q.* 27. Is it or is it not universally used on gauges for lathes, sewing machines, grain drills, and all classes of machinery where the feed mechanism is made adjust- [552] able? *Ans.* 27. Yes, sir. *Q.* 28. How long has it been so used? *Ans.* 28. Used, as I know of, for the last twenty-five years."

So, also, Mr. Brackett, another expert for the defendants, says: "*Q.* 11. Where it is desirable or necessary in mechanics to provide for adjustment of parts attached to one another, what is the most common form or manner of securing adjustability? *Ans.* 11. Where two pieces are bolted together the general form is by an oval or slotted hole. We have always used such a connection wherever it is possible, in frame structures or sliding parts, where difference in length or position is required. *Q.* 12. Can you name a few of the applications of this slot for the purpose of adjustment, in your own business and outside of it? *Ans.* 12. We use it in all bearing plates where bridges are anchored to the masonry, and where rollers are placed under one end, to allow for contraction and expansion. It is also used for roof-truss bearing plates, to allow the roof to change its position on the wall, and for the fastening of columns to continuous girders, where the change of temperature changes the position of the girders or the columns. It is also in common use in such work as slide gauges, where the adjustment of the gauge is required. It is used

on an iron planer, where the difference of the length of the parts is required at different times. It is also used on the ordinary carpenter's plane, to adjust the position of the knives. It is used on a rotary wood planer for the same purpose, and, in fact, there is hardly an adjustable part of a machine where two pieces come in close contact but that it is the most common mode of adjustment, and I consider it as one of the commonest principles of mechanics, and one that has been used, that I know of, for fifteen years, and was an old principle at that time. *Q.* 13. Would any ordinarily skilled mechanic who had occasion to provide for the adjustment to different positions of the parts of any machine or device be able to apply this principle without suggestion or invention? *Ans.* 13. He could, for the reason that this would be the first manner in which he would try to make the connection, when, if it did not work, he would look [553] for some other manner to make connection, for the reason that this is one of the simplest and easiest methods for connecting and allowing adjustment where both parts, when two pieces are used, are made of iron."

There is no contradiction of this testimony, and in view of it the improvements covered by claims 1, 2 and 3 of No. 213,529 are merely applications of old devices to new uses, not involving invention. *Pa. R. Co.* v. *Locomotive Engine Safety Truck Co.* 110 U. S. 490 [28:222], and cases there cited.

In regard to claim 4 of that patent, the invention is stated in the specification to be the putting, at the part of the frame to which the foot is to be attached, a proper bearing surface to support the brace and dash. Claim 4 states that the bearing is arranged to strengthen the frame in that part by which the dash is to be connected to the foot of the vehicle. There was no invention in providing such bearing, either by an increase in the quantity of metal or otherwise, so as to strengthen the proper part, in a proper way, for its proper duty.

As to reissue No. 9891, claims 1, 2 and 3 relate to channeling or recessing the rail or bar, so that the metal on each side of the channel or recess will be thicker than the metal at the channel or recess, the necessary effect of such arrangement being that the metal on each side of the channel or recess will be thick enough to form a bearing, and the metal in the channel or recess will be capable of being easily perforated. The channeling or recessing of the foot, covered by claim 11, involves the same idea; and the specification states that thereby the foot may be cast of malleable iron, and may be made light and thin, and be better annealed.

The idea of using iron with channels or recesses in it, to produce any result due to the existence of such channels or recesses, was old in the state of the art of working in metals. Mr. Wood testifies as follows: "*Q.* 3. State whether you are familiar with any uses to which channeled iron is applicable; if so, what uses, and the purpose and manner, and for how long you have known them. *Ans.* 3. Channeled iron, you might say, has been generally [554] used in many different kinds of work and ways ever since I have been in the business. I first used it about twenty years ago in putting up hand rails and stairs. *Q.* 4. How long was it used for stairs and why? How did you apply it? *Ans.* 4. We used it for a hand rail on the top of the rods which came from the steps, about three feet. We punched holes in the web of the iron—in the face of the iron—and riveted the vertical rods over, which left nice, smooth flanges to stiffen the rail and strengthen it, and was at the same time light and answered the purpose of a solid bar of iron with much less work. *Q.* 5. Can you name other uses to which channeled iron has been applied? *Ans.* 5. Yes. I fitted up a large lot of iron for Wood Brothers & Co., of Bridgeport, Connecticut, in 1870, for their landaus, carriages which they were making, which they used—this channel iron—for dropping the tops and for holding the tops up in a position in different ways. These irons were fitted up with poles, with slots in them, for adjustable purposes. I bought the iron from a hardware store, as it was common stock or general stock. We had no trouble to obtain different sizes for the purpose. Since then I have seen it used in a great many different ways and for a great many different purposes; for instance, fire proof buildings. The girders and beams, the laths and roofing are all made of channeled iron. The bridges, railroad iron, gears of vehicles, jail work, vault work, safes, fire and burglar proof safes, fences, agricultural implements—in fact, it is used for a great variety of work which I can't call to mind just now. *Q.* 6. For how long has it been so used? *Ans.* 6. Ever since I have been in the business. *Q.* 7. What was the shape of the channeled iron you used in 1870 for the carriages made at Bridgeport? *Ans.* 7. The web of the iron was about 2¼ inches on the face; flanges about a half inch deep. The web was about three sixteenths of an inch deep. *Q.* 8. What part of the iron was perforated with slots for adjustment purposes? *Ans.* 8. The web. *Q.* 9. Did you buy it already channeled? *Ans.* 9. Yes, sir. *Q.* 10. State whether or not you are familiar with the use of channeled iron for the purpose of feet, for any purpose. *Ans.* 10. Yes; the feet of desks, stoves, machinery of different kinds, vehicles. *Q.* 13. Is channeled iron commonly [555] used in carriage work; and if so, for what purpose? *Ans.* 13. Well, channeled iron has been used for years; dash feet, dashes, tops, the bows on the tops, and for the tire on wheels. *Q.* 14. For how long a time have you known it to be used for these purposes? *Ans.* 14. Twenty years. *Q.* 15. What is the object in using channeled iron instead of solid bars? *Ans.* 15. Well, it's for the purpose of securing stiffness, lightness, and it is easy to work. It is easier to punch a hole through a light web than through a solid bar. It is economy to use it. *Q.* 16. Can you state any use to which channeled iron could be applied in mechanics where its use would be novel or would constitute an invention? *Ans.* 16. I don't know of any. *Q.* 17. Has or has not channeled iron been used in mechanics wherever it was desirable to combine lightness and strength? *Ans.* 17. Yes; we generally use it wherever we want to make that combination. *Q.* 18. For how long has its use in that way been common and familiar. *Ans.* 18. Ever since I have been in the business. *Q.* 19. State whether or not iron dealers keep in stock constantly various forms of channeled iron. *Ans.* 19. We never had any

trouble to obtain channeled iron from most any of the stores. *Q.* 20. How many various forms is it kept in in stock? *Ans.* 20. Well, I could not say as to that. A great many forms—for bridge purposes, house building, jail work, safe work, vehicle work; it is generally kept constantly on hand. Parties who generally use large lots of it for building, bridge purposes, and other purposes, make contracts for large lots of it and have it rolled to order, and get it cheaper that way."

Mr. Brackett testifies as follows: "*Q.* 4. State whether or not channeled iron is a common form for mechanical uses; and, if so, some of the uses to which it is put. *Ans.* 4. It has been commonly used in all frame structures where stiffness and lightness is desired. I have known of its use since 1862, when I first took an active part in manufacturing. We use it in bridges, roof trusses, machine frames, floor beams, joists, tramways—in fact, hardly a frame structure but what it is used more or less. These other classes of manufactories use it in numerous places, such as fence pickets, bottom rail [556] of fences, in stove manufacturing, furniture manufacturing, sewing machine manufacturing; and in fact I hardly think there is any class of iron structures where lightness is required but that it could be used to advantage. *Q.* 5. How long have you known of these uses you have referred to? *Ans.* 5. Fifteen years or more. *Q.* 6. Should it be desirable to combine lightness and strength in the construction of vehicles or any parts of them, would it require any invention or would it be novel to apply channeled iron for that purpose? *Ans.* 6. No, sir; I think not, as channeled iron is in almost as common use as bar iron, and hardly any framed work is made where stiffness and lightness is required but that it is used, because it is the stiffest form in which iron can be used in carrying a load between two points, either suspended or in the form of a——, and wherever a compressible strain occurs, or cross strain, or any other strain than a purely tension strain, it is the cheapest iron to use, and it is in common use under such circumstances. *Q.* 7. What other advantages or advantage, if any, is obtained by the use of channeled iron, which is also old and familiar? *Ans.* 7. Wherever two members running either at an angle or in the same direction, its greatest convenience is in the easy manner and strength with which such attachments and connections can be made, on account of the thinness of its web, it being readily drilled or punched, requiring a great deal less labor and expense than flat bar iron; and on this account it is in general use throughout the United States, for the last fifteen to twenty years, that I know of. *Q.* 8. Can you give any instances in which channeled iron has been used as supports—that is, legs or feet, prior to 1875? Witness here asks whether counsel means channeled on one side or both. *Q.* Either. *Ans.* 8. Sewing machine legs, stove legs, school desk legs, steam heater legs; that's all I think of just now. *Q.* 9. Do you know of any use of iron for feet or supports where these supports are not made channeled as a rule? *Ans.* 9. No, sir; I do not, and as a question of economy of material, it should be done in every instance where practicable."

This testimony is uncontradicted, and in view of it the improvements covered by claims 1, 2, 3, and 11 of reissue No. 9891 amount only to [557] applications of old devices to new uses, not involving invention.

The decree of the Circuit Court is affirmed.

IDA RALSTON, *Appt.*, [663]
v.
GEORGE B. TURPIN, as Trustee.

(See S. C. Reporter's ed. 663-677.)

Mental capacity—dissipation—dissatisfaction—gifts to agents—deliberate judgment—when deed will not be set aside.

1. That the grantor in a deed was in a declining state of health and his constitution greatly weakened when he executed the deed does not necessarily imply an absence of sufficient capacity to dispose of property by a gift or otherwise.

2. Although such grantor, from habitual dissipation or other cause, was in such an enfeebled condition of mind or body immediately before or immediately after the date of the deed as to render him incompetent to transact business, yet if it appears that on the occasion when the deed was executed he was sober, and of sufficient capacity to dispose of his property with an intelligent understanding of what he was doing, the deed cannot be canceled on the ground of his mental incapacity.

3. That the grantor subsequently expressed no dissatisfaction with what he had done nor took any step to set the deed aside is of some force to show that when he executed it he knew what he was doing.

4. Gifts procured by agents and purchases made by them from their principals should be scrutinized with a close and vigilant suspicion.

5. Although the execution of a deed may have been induced by feelings of friendship and gratitude, yet, if the grantor acted upon his own independent, deliberate judgment, with full knowledge of the nature and effect of the deed, it will not be set aside as obtained by undue influence.

[No. 98.]

Argued Nov. 26, 27 and 28, 1888. Decided March 5, 1889.

APPEAL from a decree of the Circuit Court of the United States for the Southern District of Georgia, dismissing a suit to cancel deeds of gifts of real estate executed by plaintiff's husband to defendant as trustee for his children. *Affirmed.*

The facts are stated in the opinion.

Messrs. **Clifford Anderson** and **Washington Dessau**, for appellant:

A deed when made by a person of very weak mind or whose mental faculties have become greatly impaired by disease or other cause, if the consideration on which it is based is grossly inadequate, cannot be upheld in a court of equity.

Robinson v. *Schly*, 6 Ga. 515; *Allore* v. *Jewell*, 94 U. S. 506 (24: 260).

Any relations shall be deemed confidential arising from nature or created by law, or resulting from contracts, where one party is so situated as to exercise a controlling influence over the will, conduct and interest of another; or where, from similar relations of mutual confidence, the law requires the utmost good faith, such as partners, or principal and agent.

Kerr, Fraud & Mistake, 172; 2 Pom. Eq. Jur. § 951; 1 Story, Eq. Jur. § 315; *Hunter* v. *Atkins*, 8 Eng. Ch. 303, 314-5, 3 Myl. & K.

113; *Harris* v. *Tremenheere*, 15 Ves. Jr. 34 and notes; *McCormick* v. *Malin*, 5 Blackf. 509.

The deeds were not the voluntary suggestion and act of Ralston, but were the suggestion of Turpin and brought about by his agency, solicitation and influence.

Code Ga. § 2666; *Huguenin* v. *Baseley*, 14 Ves. Jr. 273; *Harding* v. *Handy*, 11 Wheat. 103 (6: 429); *Hunter* v. *Atkins*, *Allore* v. *Jewell*, and *McCormick* v. *Malin*, *supra*.

Messrs. **Augustus O. Bacon** and **John C. Rutherford**, for appellee:

Whenever the relation implies control or dominion, such as guardian and ward, trustee and *cestui que trust*, etc., all dealings between the parties are subject to an adverse presumption.

Hunter v. *Atkins*, 3 Myl. & K. 113; Kerr, Fraud & Mistake, 176, 177; *Smith* v. *Kay*, 7 H. L. Cas. 751; *Uhlich* v. *Muhlke*, 61 Ill. 499.

The agent to sell cannot himself be the buyer; nor can the agent to purchase be the seller; and this is true without reference to the good faith of the agent.

2 Pom. Eq. § 959; Story, Eq. § 315.

If the party claiming the benefit of the gift can show that it was the voluntary act of the donor, free from any undue influence, the gift will be upheld.

Huguenin v. *Baseley*, 14 Ves. Jr. 273; *Kittredge* v. *Betton*, 14 N. H. 401.

Unless there is an abuse of the confidence reposed, the validity of the deed will not be affected.

Toker v. *Toker*, 31 Beav. 629; *Pratt* v. *Barker*, 1 Sim. 1, 4 Russ. 507; *Pressley* v. *Kemp*, 16 S. C. 334, 42 Am. Rep. 635.

Pressure of whatever character, whether acting on the fears or the hopes, if so exerted as to overpower the volition without convincing the judgment, is a species of restraint under which no valid will can be made.

1 Jarm. Wills, 36 *Williams* v. *Goude*, 3 Eng. Eccl. 252, 1 Hagg. Eccl. 577; *Wyatt* v. *Ingram*, 3 Hagg. Eccl. 466; *Means* v. *Means*, 5 Strobh. L. 167; *Miller* v. *Miller*, 3 Serg. & R. 267; *Davis* v. *Calvert*, 5 Gill & J. 269; *O'Neall* v. *Farr*, 1 Rich. L. 80; *Re Harrison's Will*, 1 B. Mon. 351; *Martin* v. *Teague*, 2 Speers, L. 268; note to 2 Pom. Eq. § 951.

Mere mental weakness will not invalidate a contract or gift unless the grantor or the donor be *non compos mentis*.

Bigelow, Fraud, 281; *Henderson* v. *McGregor*, 30 Wis. 78; *Graham* v. *Pancoast*, 30 Pa. 89; *Aiman* v. *Stout*, 42 Pa. 114; *Jackson* v. *King*, 4 Cow. 207; *Stewart* v. *Lispenard*, 26 Wend. 255; *Delafield* v. *Parish*, 25 N. Y. 9, 70; *Greer* v. *Greer*, 9 Gratt. 330; *Smith* v. *Beatty*, 2 Ired. Eq. 456.

[664] *Mr. Justice* **Harlan** delivered the opinion of the court:

This suit was brought by the widow of the late James A. Ralston, Jr., to obtain a decree canceling certain deeds of gift of real estate, executed by her husband to the appellee, George B. Turpin, as trustee for his children. The original bill, filed August 7, 1883, sought this relief upon the ground that Turpin obtained the execution of the deeds by undue influence exercised by him over the grantor while the latter was in declining health, with a con-
[665] stitution seriously impaired by dissipation, and by the suppression of facts that were within his knowledge, and which, in view of his relations to the grantor, he was under obligation to disclose. In an amended bill, filed May 6, 1884, the grounds for cancellation were enlarged by an averment that at the time of signing the deeds the grantor was mentally incapable of comprehending and did not comprehend what he was doing, and that plaintiff gave her apparent consent to their execution, because, knowing Turpin's power "over her husband, she feared to offend him lest he might either work a separation between her and her said husband, or render their relations with each other insecure and unhappy;" and that "she and her husband were both overreached and deceived by the said Turpin, and yielded because they were in effect powerless to resist." By a subsequent amendment, made May 29, 1885, the plaintiff alleged as to the first deed that neither she nor her husband knew, at the time of its execution, whether it was a will or a deed, or what its legal effect was, and that both of them were so completely under Turpin's influence, and so anxious to conciliate and gratify him, that they did not stop to consider its character or effect, and had no opportunity to consult counsel with reference thereto. The answer put in issue all the material averments of the bill and amended bills.

The circuit court dismissed the suit, placing its decision upon two grounds: *first*, that when the deeds were made the grantor was capable of disposing of his property as he thought proper; *second*, that its disposition was in conformity with the long settled and cherished purpose of his life, and was not brought about by a betrayal of trust or any improper influence upon the part of the grantee. 25 Fed. Rep. 7.

The relations between the grantor and Turpin will appear from the following facts, some of which are conceded, while the others are established by a clear preponderance of evidence.

James A. Ralston, Sr., died in 1864, possessed of considerable property, principally real estate in Macon, Georgia, which passed, in equal parts, to his widow, and sole surviving child, James A. Ralston, Jr. During the lifetime of the father, Turpin attended to a large [666] part of his business, and held towards him relations of close friendship and confidence. After his death the management of the estate was committed by the legal representative of the father to Turpin, who collected rents, leased property, and directed necessary repairs. In 1867, the son, then about nineteen years of age, and having the right, under the laws of Georgia, to select his guardian, chose Turpin, without his solicitation, for that position. The latter qualified on the second of August, 1867. In the same year Mrs. Ralston, the mother, intermarried with Dr. Bozeman of New York.

On the third of May, 1869, Turpin, having made a final settlement of his accounts as guardian before the proper court, and turned over to his ward, who had then reached his majority, the property and assets belonging to the latter, received from that court a formal letter discharging him from the guardianship. Immediately after the relations of guardian and ward were thus severed, Turpin and his partner Ogden, composing the firm of Turpin & Ogden, were employed by young Ralston to

take charge of his real estate, and to collect rents, make repairs, etc. In addition to the relations between him and Turpin, arising out of this employment, there existed between them a warm personal affection.

In 1873 the mother of Ralston died, leaving a will by which a considerable part of her estate was devised to him; and this, also, was committed by him to the management of Turpin & Ogden. By her will Turpin was made executor. He qualified, and, in 1878, having fully administered her estate, was discharged as executor. In this connection it may be stated that Mrs. Bozeman told Turpin that he was not remembered in her will, because "Jimmie had or would do so in his," she observing, at the time, that he had been a good friend to the family. This is stated by Turpin, in his deposition; and there is no reason to doubt the truth of his statement.

On the 11th of May, 1874, Ralston being about twenty-six years of age, and then competent to dispose of his property, and having an estate yielding him an annual income of about $15,000, made at Macon, Georgia, and [667] without suggestion by Turpin, his will and testament whereby he directed that a monument, suitable to his condition and circumstances of life, be erected over his grave, and requested that his "friend, George B. Turpin, and his children after him," would see to it that his "monument and grave shall always during their lives be suitably kept and cared for." By that will he also directed that after the payment of his debts his entire estate be divided into two equal parts; one part to go to George B. Turpin, in trust for the sole benefit and use of the testator's aunt, Mrs. Laura B. Smith, and her children, James, Annie, Daisy and Charles, during her natural life, and after her death, for the joint and sole use and benefit of those children, and their respective descendants, during the life of the child longest surviving, and upon the death of the last survivor, to the heirs at law of his aunt. The other part was devised to Turpin for the sole benefit and use of himself and children (born, and to be born) for and during his life; the trust to cease at his death and the property to vest in his children then in life, the descendants of any deceased child to share in the division *per stirpes*. Turpin and Ogden were constituted his executors.

On the 15th of December, 1879, Ralston, then nearly thirty-two years of age, made, at the City of New York, a second will, revoking all other wills, and devising to Turpin, "in trust for his children, William C. Turpin, Frank M. Turpin, George R. Turpin, Lizzie Turpin, and Walter H. Turpin," the building at the corner of Cherry and Third Streets, in Macon, known as Ralston Hall, together with the adjoining lots 66, 68 and 70, subject only to such liens and incumbrances as might be created thereon during his lifetime. This property is variously estimated to have been worth between $40,000 and $50,000, and constituted, at that time, according to the weight of the evidence, less than one half in value of his estate. He then devised to "Ida Blanchard, by which name she is now known, and whose original name was Sarah or Sally J. Harten, formerly of Philadelphia, Pa.," four stores in Macon, and all the watches and jewelry of which he should die possessed. To his aunt, Mrs. Smith, during her natural life, and at her death to her children in fee simple, he bequeathed his undivided one half interest in the [668] Ralston mansion house in Macon. To his grandmother, during her natural life, he devised all of the family pictures of which he should die possessed, and at her death "to my friend, George B. Turpin, of Macon, Ga., having enjoyed his friendship for a long course of years. I feel that they will be safe and kept intact in his hands." To Ogden he devised all of the household furniture in the Ralston mansion house.

It is here necessary to state that the plaintiff, under the name of Ida Blanchard, went to Macon in 1869, and lived continuously in houses of public prostitution. While prosecuting that mode of life, young Ralston made her acquaintance, and for several years, without intermission, and much to the grief of relatives and friends, held improper relations with her. They often quarreled and had drunken broils with each other in different places of bad repute where they met. During her residence in Macon, Turpin used every effort to induce Ralston to abandon the reckless and immoral life he was leading, and to cease the use of strong drink. But his efforts and warnings were unattended with success, except for brief intervals. No change occurred in the relations of Ralston and the plaintiff while in Macon. She states that he intended to marry her as far back as 1876. In the fall of 1879 they went to New York; and on the 23d of January, 1880, within less than three weeks after the will of 1879 was made, they were married. The fact of their marriage was not known in Macon until some months afterwards. In April, 1880, they removed to Stamford, Conn. In the summer of that year, Turpin, while at Saratoga Springs, received information of the marriage, and that they were living in Stamford. He went to the latter place in August, 1880, to ascertain if such were the fact, and, if it were, to inform Ralston that his marriage had, by the Laws of Georgia, revoked the will made in favor of Turpin's children, and to suggest the propriety, if he still desired to do something for them, of making a formal deed for their benefit. There is some conflict between the statements of the plaintiff and Turpin as to what occurred at Stamford. But it is evident that nothing was said or done by Turpin, on that occasion, calculated to influence Ralston or his wife to take [669] any course not entirely in accordance with their wishes. Nor is there any ground to suppose that the plaintiff acquiesced in what her husband did from fear that Turpin might expose her course of life or effect a separation between herself and husband. It does not appear that she stood in fear of anybody. It is clearly shown that, as the result of the interview at Stamford, Ralston and wife went to New York, and, before a commissioner of the State of Georgia, freely and voluntarily executed and acknowledged a deed, in fee simple, dated August 26, 1880, conveying to Turpin, as trustee for his children, William, Frank, George, Lizzie and Walter, the identical property devised to him as trustee by the will of 1879, subject, however, to the condition that Ralston should

receive annually its rents, uses and profits, after deducting taxes and insurance thereon, and expenses for collecting the rents and making repairs, and subject to a mortgage of $5,000 made by Ralston to Ross, on one of the stores conveyed to Turpin as trustee. Two days afterwards, August 28, 1880, another deed, covering the same property and containing the same conditions, was executed and acknowledged by Ralston—the first deed having been discovered, or being supposed, to be informal in some repects. On the day of the execution of each of these deeds the plaintiff executed and acknowledged, before the same commissioner, a separate instrument in writing, stating that she freely and voluntarily ratified and confirmed the deed made by her husband.

In the year 1881, Turpin, having been advised by counsel that the former deeds for the benefit of his children were defective, in that their clauses, or some of them, were of a testamentary character, inclosed another deed for Ralston to execute, which the latter did on the 19th of April, 1881; the plaintiff executing on the same day a separate writing ratifying and confirming that deed, and renouncing and conveying to the trustee for the uses therein named all her right of dower and other interests in the property conveyed. This deed conveyed to Turpin in trust for his children named in those instruments the same property as that described in the will of 1879, and in the deeds of August 26, 1880, and August 28, 1880.

[670] In this connection it may be stated that prior to the making of the will of 1879, Ralston became unfriendly to the husband of one of the daughters of Turpin, and, for that reason, she was omitted from that will as well as from all the deeds subsequently executed. He died at Montclair, New Jersey, on the 4th of July, 1883.

We must examine each of the principal grounds upon which the plaintiff bases her claim for relief; for if, as contended, Ralston was in such condition, mentally and physically, when the deeds of 1880 and 1881 were executed, that he could not or did not comprehend the nature of the transactions; or if their execution was obtained by means of undue influence exercised over him by Turpin; in either case, the plaintiff would be entitled to relief. It would be granted upon the principle laid down in *Harding* v. *Handy*, 24 U. S. 11 Wheat. 103, 125 [6: 429], which was a suit by heirs at law to set aside conveyances obtained from their ancestor. *Chief Justice* Marshall there said: "If these deeds were obtained by the exercise of undue influence over a man whose mind had ceased to be the safe guide of his actions, it is against conscience for him who has obtained them to derive any advantage from them. It is the peculiar province of a court of conscience to set them aside." *Allore* v. *Jewell*, 94 U. S. 506, 511 [24: 260, 263]. On the contrary, if it does not appear that he was incapable, by reason of physical or mental debility, of exercising a discriminating judgment in respect to the disposition of his property, or was driven to make the gifts in question against his own wishes, and under some influence that he was unable, no matter from what cause, to resist, the relief asked must be denied. "The undue influence for which a will or deed will be annulled," this court said in *Conley* v. *Nailor*, 118 U. S. 127, 134 [30: 112, 114], "must be such as that the party making it has no free will, but stands *in vinculis*."

In a case of conflicting proof, as here, it is a circumstance not without weight, that the plaintiff, who, more than anyone else was cognizant of the grantor's condition during the entire period in question, makes no averment in the original bill of the husband's want of capacity to dispose of his property. The aver- [671] ment was that when the deeds were made he was in a declining state of health, and his constitution greatly weakened by dissipation. Such a condition does not, however, necessarily imply an absence of sufficient capacity to dispose of property, by gift or otherwise. Nearly a year passed after the institution of this suit, before she distinctly made the issue that the deeds were void for the want of capacity upon the part of her husband to make them. The proof does show, beyond question—indeed, it is admitted—that for many years prior to the execution of the deeds, and thenceforward until his death in 1883, he was intemperate in his use of ardent spirits. He was often intoxicated, and, when in that condition, was incapacitated to transact business. But for many years prior to his death there were intervals, some of them quite long, during which he avoided excessive indulgence in strong drink. His capacity, when sober, to transact business is abundantly shown. The vital inquiry is as to his capacity, not when he was intoxicated, but when the deeds were executed. *Conley* v. *Nailor*, 118 U. S. 127, 131 [30: 112, 113]. The evidence leaves no room to doubt that, at those particular dates, he fully comprehended the character of those instruments. If it satisfactorily appeared that, from habitual dissipation or other cause, he was in such enfeebled condition of mind or body, immediately before or immediately after their execution, as to render him incompetent to transact business, the presumption might arise that he was unable, at the time of their execution, to understand what he was doing, and thus the burden of proof, as to his capacity, at those particular dates, to dispose of his property, be imposed upon the grantee. Even in that view, the plaintiff would not be entitled to a decree canceling the deeds, on the ground of the grantor's mental incapacity; for it appears that, on each occasion when the respective deeds were executed, he was perfectly sober, and possessed sufficient capacity to dispose of his property with an intelligent understanding of what he was doing. He knew, at the time, that each deed conveyed certain property to Turpin in trust for the children named, and that they were substantially in execution of his settled purpose to make provision out of his es- [672] tate for the children of the man who had been for years the fast friend and confidential adviser of his parents and of himself. That purpose was based upon motives entirely creditable to him, and, so far as the record discloses, was originally formed without any suggestion by Turpin or his children. Prior to his leaving Macon in 1879, and before making the will of that year, he often said to companions or acquaintances that he intended to make, or had made, such provision out of his estate.

If he executed the deeds of 1880 without knowing what he was doing, he would, natu-

rally, at some subsequent time, have expressed dissatisfaction with what he had done, and taken steps to have them set aside. But no expression of dissatisfaction was ever made by him. On the contrary, upon receiving the deed of 1881, accompanied by the request that he would execute it, he promptly complied with that request, and returned the deed duly acknowledged by himself and wife to Turpin. His correspondence with the latter during 1880 and 1881 furnishes persuasive, if not conclusive, evidence that he had accurate knowledge of the condition of his property and its management by Turpin & Ogden, under the direction of Turpin, and was in the enjoyment of good health. On July 28, 1880, within less than a month before making the first deed of gift, he wrote to Turpin from Stamford, Connecticut, stating among other things, that he was "enjoying good health." On April 18, 1881, the day preceding the last deed of gift, he wrote from the same place to Turpin, "My health is splendid, but Ida has been ill all winter and is so still." The body of each of these letters is in the handwriting of the complainant. They are inconsistent with her present contention that, not only at the time, but both before and after, the deeds of gift were executed, her husband's mind and body had been so wrecked by dissipation that he did not intelligently comprehend what he did, or possess sufficient will to resist the importunities or persuasion of others. To these considerations we may add the significant fact that in no one of the letters that passed between Turpin and the plaintiff, after the latter left Macon, is there any intimation [673] that she disapproved of the provision made for Turpin's children. We concur entirely with the conclusion reached upon this issue by the court below.

It remains to consider whether the deeds of gift were the result of undue influence exercised by Turpin over Ralston. In discussing this question counsel for the plaintiff call attention to section 2666 of the Code of Georgia, which provides that "A gift by any person just arrived at majority, or otherwise peculiarly subject to be affected by such influences, to his parent, guardian, trustee, attorney, or other person standing in a similar relationship of confidence, shall be scrutinized with great jealousy, and upon the slightest evidence of persuasion or influence towards this object, shall be declared void, at the instance of the donor or his legal representative, at any time within five years after the making of such gift." We do not perceive that this provision has any direct bearing upon this case. There was here no gift by the ward just after he arrived at his majority. If the deeds in question had been made immediately upon Ralston's arriving at full age, or shortly after he came into possession of his estate, they would, in view of the then recent relation of guardian and ward, have been more difficult to sustain. Still, they would have been sustained if it had appeared that they were freely and voluntarily made, upon full knowledge of the facts, without misrepresentation or suppression of material facts by the guardian. In *Hylton* v. *Hylton*, 2 Ves. Sr. 547, *Lord Chancellor* Hardwicke said: "Undoubtedly, if after the ward or *cestui que trust* comes of age, and after actually put into possession of the estate, he thinks fit, when *sui juris*, and at liberty, to grant that or any other reasonable grant by way of reward for care and trouble, when done with eyes open, the court could never set that aside; but the court guards against doing it at the very time of accounting and delivering up the estate, as the terms; for the court will not suffer them to make that the terms of doing their duty." In the case before us more than eleven years elapsed after Ralston attained full age, and after Turpin finally settled his accounts as guardian, before the first of the deeds of gift was made.

In respect to that settlement it may be observed that by section 1847 of the Georgia Code [674] it is declared that "No final settlement made between guardian and ward can bar the ward, at any time within four years thereafter, from calling the guardian to a settlement of his account, unless it is made to appear that the same was made after a full exhibit of all the guardian's accounts, and with a full knowledge by the ward of his legal rights." Nothing is disclosed by the record that impeaches the entire accuracy of the guardian's final settlement; nothing that suggests any want of intelligence or integrity in his administration of the ward's estate; nothing to show that he ever realized anything from the position of guardian, except such compensation as the law permitted him to receive. When, therefore, the relation of guardian and ward was severed, Ralston had every reason to confide in Turpin's integrity, and to feel grateful, not only for his uniform kindness, but for faithful devotion to his interests.

But it is contended that the relations subsequently existing between them were such as are described in section 3177 of the Georgia Code, which declares that "Any relations shall be deemed confidential arising from nature, or created by law, or resulting from contracts, where one party is so situated as to exercise a controlling influence over the will, conduct and interest of another; or where, from similar relations of mutual confidence, the law requires the utmost good faith, such as partners, principal and agent," etc. Undoubtedly, the relation of principal and agent existed between Ralston and Turpin after the relation of guardian and ward had been severed, and up to the death of Ralston. The section of the Georgia Code quoted is an expression of a general rule that has always governed courts of equity. The agent is bound to act with absolute good faith toward the principal in respect to every matter intrusted to his care and management. In accepting a gift from his principal he is under an obligation to withhold no information in his possession respecting the subject of the gift, or the condition of the estate in his hands, which good faith requires to be disclosed, or that may reasonably influence the judgment of the principal in making the gift. All transactions between them whereby the agent derives advantages beyond legitimate compensation for his [675] services will be closely examined by courts of equity, and set aside if there be any ground to suppose that he has abused the confidence reposed in him. It is for the common security of mankind, Mr. Justice Story well says, "that gifts procured by agents, and purchases made by them, from their principals, should be scrutinized with a close and vigilant suspicion." 1

Story, Eq. Jur. § 315. An instructive case upon this point is *Harris* v. *Tremenheere*, 15 Ves. Jr. 34, 38, which was a suit to cancel leases to a party who, at the time, held the relation of steward, agent, and attorney to the lessor. Some of the leases were pure gifts by the employer. *Lord Chancellor* Eldon disclaimed any jurisdiction to annul such gifts, when based upon the generosity of the donor, or to weigh the value or amount of the consideration, as if it had been the subject of barter, but said, that if he could find "in the answer or the evidence the slightest hint that the defendant had laid before his employer an account of the value of the premises that was not perfectly accurate, he would set aside such leases." He would do this, he said, without regard to the intention of the parties, "upon the general ground that the principal would never be safe if the agent could take a gift from him upon a representation that was not most accurate and precise."

We do not intend to qualify or weaken, in any degree, these salutary doctrines. Their recognition, however, does not determine the present case, unless it be held that a principal cannot, under any circumstances whatever, make a valid gift to his agent of property committed to the latter's care or management. No such doctrine has ever been established, nor could it be, without impairing the natural right of an owner to make such disposition of his property as he may think would best subserve his interest and comfort or gratify his feelings. That Turpin held such relations, personal and otherwise, to young Ralston, as would enable him to exercise great influence over the latter in respect to the mode in which his property should be managed for purposes of revenue; that Ralston trusted Turpin's judgment as to matters of business more than the judgment of any other man; and that he had an abiding confidence in Turpin's integrity, as well as in his [676] desire to protect his interests, are conceded. But we are satisfied that Turpin did not improperly use the influence he had over, or abuse the confidence reposed in him by, young Ralston. It was the latter's own thought, induced, no doubt, by his friendly feeling for Turpin and gratitude for the latter's fidelity to his interests, to make some provision for Turpin's family. This thought was first formally expressed in the will of 1874, when he was capable of making a disposition of his property. It was substantially repeated in the will of 1879, drawn in precise conformity with his directions. The circumstances detailed by the plaintiff's counsel, to show that the deeds of 1880 and 1881 were procured by undue influence upon the part of Turpin, lose most of their force in view of the fact that they covered the same property and named the same beneficiaries that are described in the will of 1879. That Turpin caused the first deed to be prepared, and requested Ralston to execute it, are facts of but little weight. Turpin had been informed of the will of 1879, and it was his right, if not his duty to his children, to inform Ralston that his marriage had revoked that will, and to suggest that, if he was so minded, the execution of a deed was an appropriate mode to give effect to his intention in respect to those children. Nor was the presence in Stamford, when the deeds of 1880 were executed, of Ogden, the partner of Turpin, a suspicious circumstance. The correspondence between Ralston and Turpin, prior to that time, shows that the former was aware of Ogden's purpose to visit the North during the summer of 1880, and desired Ogden to visit him at Stamford.

Upon a careful examination of the record, we concur with the court below in holding that the plaintiff has failed to show that the deeds of 1880 and 1881 were obtained by undue influence. On the contrary, it appears, by the great preponderance of evidence (to state the case made by the defendants in no stronger language), that, although their execution may have been induced, not unnaturally, by feelings of friendship for, and gratitude to, the defendant Turpin, the grantor acted upon his own independent, deliberate judgment, with full knowledge [677] of the nature and effect of the deeds. It was for the donor, who had sufficient capacity to take a survey of his estate, and to dispose of it according to an intelligent, fixed purpose of his own, regardless of the wishes of others, to determine how far such feelings should control him when selecting the objects of his bounty.

In respect to the allegation that Turpin suppressed facts touching the condition of Ralston's estate, as affected by the claim of Mrs. Smith, it is sufficient to say that it is not sustained by the proof.

Other facts than those we have mentioned are disclosed by the record, and other questions were discussed at the bar; but as they do not, in our judgment, materially affect the decision of the case, we need not specially refer to them.

Decree affirmed.

THE CITY NATIONAL BANK OF FORT WORTH ET AL., *Appts.*, [557]

v.

R. D. HUNTER ET AL., Partners, Under the Firm Name of HUNTER, EVANS & CO.

(See S. C. Reporter's ed. 557-579.)

Liens on personal property—annulling agreements—appeal by part of the parties.

1. Where two parties who severally hold liens upon personal property agree that the same may be sold and delivered to a third person and the proceeds of the sale divided between them in certain proportions, neither one of them can thereafter insist upon superiority of lien, as between themselves.

2. Under the circumstances, it would require a strong case of definite misrepresentations as to facts, as distinguished from mere matters of opinion, to be made out before the agreements, sought to be annulled in this case, could be declared null and void.

3. Where a decree is severable in fact and in law, two of the defendants may be allowed to prosecute an appeal therefrom, without joining a codefendant, who did not desire to appeal.

[No. 116.]

Submitted Dec. 10, 1888. Decided March 5, 1889.

APPEAL from a decree of the Circuit Court of the United States for the Northern District of Texas, in favor of complainants in a suit for the foreclosure of a lien and for money due upon a debt. *Reversed.*

Statement by *Mr. Chief Justice* **Fuller:**

[558] In February, 1879, Hunter, Evans & Co., engaged in the live stock commission business at East St. Louis, Illinois, made an arrangement with John O'Neal, who resided in Van Zandt County, Texas, and was buying and shipping cattle from different points in that State, by which they were to furnish O'Neal money to buy cattle during the spring and summer of that year, to be consigned to them for sale. The dealings between them resulted in an indebtedness to Hunter, Evans & Co. to a considerable amount; and on the 20th day of August O'Neal executed two notes for $11,000 each, payable to Hunter, Evans & Co., and as security for their payment gave them a bill of sale on his O N brand of cattle, further described as being his home stock of cattle, and on the same day and as part of the same transaction, Hunter, Evans & Co. executed and delivered to O'Neal a defeasance providing for the cancellation of the bill of sale when the notes were paid. It seems to be conceded that this chattel mortgage was never properly recorded in accordance with the Statute of Texas, which provided that every chattel mortgage not accompanied by immediate delivery and followed by an actual and continued change of possession of the property mortgaged or pledged, should be absolutely void as against subsequent purchasers and mortgagees or lien holders in good faith, unless such instrument or a true copy thereof were forthwith filed in the office of the county clerk of the county where the property should then be situated. While O'Neal was conducting his business with Hunter, Evans & Co., he obtained money from the City National Bank of Fort Worth, which was repaid by drafts drawn on Hunter, Evans & Co. either by O'Neal or by Wm. Hunter, the agent of Hunter, Evans & Co., which were duly honored by the latter, except one draft dated November 15, 1879, for $9,354.03, payment of which was refused; whereupon, on the 10th day of December, 1879, O'Neal gave his note to the bank for $9,810.11, the amount of said draft and interest, and executed a mortgage as security on his home stock of cattle branded O N, subject to the bill of sale to Hunter, Evans & Co., and also of his cattle branded H, and H I, and one hundred head of horses, [559] mares, and colts branded O N, which mortgage was recorded by the county clerk of Van Zandt County, December 16, 1879.

It is testified by the vice president of the bank that the agent of Hunter, Evans & Co. agreed with the bank that if it would honor O'Neal's checks he would guarantee their payment, and settle O'Neal's accounts at any time by a draft on Hunter, Evans & Co., in case O'Neal was not in Fort Worth to give the draft himself, and that the credit was extended to O'Neal on the strength of said guaranty; that on the day the draft for $9,354.03 was drawn he asked Hunter if it would be paid by Hunter, Evans & Co., and whether or not witness had better take a bill of lading, which would insure the payment of the draft, or hold the cattle, to which Hunter replied that Hunter, Evans & Co. were obliged to pay the draft, and would do it; and that, relying on that statement, witness did not take a bill of lading, but allowed the draft to take its course, and on that day left Fort Worth and was absent some weeks, and hence was not in Fort Worth when the draft was protested, nor present when the note and bill of sale were executed by O'Neal to the bank. William Hunter, the agent of Hunter, Evans & Co., denied that they bound themselves to pay O'Neal's indebtedness to the bank in any way whatever. Early in the year 1880, one John Dawson proposed to purchase a part of O'Neal's cattle, and drive them to a place outside of Texas, to fill a contract of sale he had made with other parties to deliver cattle at the Ponca Agency in the Indian Territory, by the 20th day of June, 1880, and agreed with O'Neal upon the purchase; but before this trade could be consummated, it was necessary for Dawson to have the consent of the lien holders, and accordingly he consulted Hunter, Evans & Co. and the officers of the bank, who agreed that the sale might be made.

On the 20th of March, 1880, O'Neal and his attorney, William Hunter for Hunter, Evans & Co. and their attorney, the vice president of the City National Bank and its attorney, and Dawson met at Fort Worth, Texas, and three different agreements in writing were executed between the parties. One was between John M. Dawson, Hunter, Evans & Co., and the bank, [560] and recited the existence of indebtedness and liens, and the fact that O'Neal had contracted for the sale of the cattle to Dawson, as shown by a written contract, by the terms of which Dawson was to assume the payment of O'Neal's indebtedness to Hunter, Evans & Co. and the bank, provided sufficient cattle be delivered by O'Neal to Dawson for the purpose; that in the event that the cattle sold and delivered by O'Neal to Dawson should be insufficient to discharge the amount of the indebtedness in full, then Dawson assumed to pay off and discharge the indebtedness *pro rata*, to the extent of the cattle received, payment to be made by Dawson to Hunter, Evans & Co. and the bank by October 1, 1880; the sale was stated to be subject to the liens and the cattle were to be held in trust for Hunter, Evans & Co. and the bank; that Hunter, Evans & Co. and the bank together should select a man to accompany Dawson from Texas to the point where the cattle might be sold, and this man was to have the legal possession of the cattle and receive the proceeds of the sale; if Dawson did not sell the cattle by the first of October, 1880, then Hunter, Evans & Co. and the bank might retake the cattle and dispose of them, and apply the proceeds thereof. Dawson was to have the handling, control, and disposition of the cattle, subject to the provisions of the agreement.

Another of the agreements was between Hunter, Evans & Co., the bank and O'Neal, whereby Hunter, Evans & Co. and the bank agreed to the sale of the cattle by O'Neal to Dawson, provided O'Neal should, upon the delivery of the cattle to Dawson, surrender to Hunter, Evans & Co. and the bank the proceeds of the sale, consisting of Dawson's paper, together with the contract of sale; and Hunter, Evans & Co. and the bank agreed to receive such paper and contract in discharge of their respective claims upon O'Neal, provided such proceeds equaled the amount of the indebted-

ness to Hunter, Evans & Co. and the bank; and if such proceeds should be less than said indebtedness, Hunter, Evans & Co. and the bank agreed to divide the same *pro rata*. If there should be a deficiency, O'Neal obligated himself to make it good in cash or notes secured to the satisfaction of Hunter, Evans & Co. and [561] the bank, by giving deeds of trust on real and personal property. If there arose a dispute as to the amount O'Neal owed either party, then the amount agreed to be due should be adjusted and discharged, and the amount in dispute should be secured by O'Neal as aforesaid; and when the dispute should be settled, the amount thereof should be paid from said proceeds of sale or said security furnished by O'Neal. Should there be a deficiency, it was to be "carried, owned and held between the said Hunter, Evans & Co. and the said City National Bank, according to their respective claims, and the collection arising therefrom to be prorated" between them. If the agreement, "from any cause whatever, fail to be carried out and consummated, then no statement or recital herein shall be construed to be an abandonment of any right, lien or security held by any of the parties hereto."

It was further agreed by O'Neal that should there be a deficiency he would secure it in manner aforesaid, and it was to bear interest at the rate of 12 per cent per annum from date, and to mature on or before the first day of January, 1881, the deficiency to be secured at the time said cattle were delivered to Dawson.

The other agreement was between Dawson and O'Neal, reciting that whereas Hunter, Evans & Co. and the bank had liens on the cattle; and whereas O'Neal, Hunter, Evans & Co. and the bank had agreed to sell the cattle to Dawson at the prices in said agreement mentioned; and whereas Hunter, Evans & Co. and the bank had agreed with Dawson upon the time and place of payment for said cattle to the amount of their debt, or so much thereof as said cattle might bring, and also upon the manner and amount of security for said payment by said Dawson; therefore O'Neal, in consideration of the enumerated agreements, "both of which bear even date herewith and are made parts hereof," and the further consideration of the release of said indebtedness to Hunter, Evans & Co. and the bank, agreed "to gather and deliver to the said John Dawson, at or near Will's Point, in Van Zandt County, my stock of cattle, consisting of cows, calves, yearlings, and two, three and four year [562] olds and upwards, upon which said Hunter, Evans & Co. and said City National Bank have liens, together with such other of my cattle as I may want to put in said sale and as may be acceptable to said Dawson, at the following prices," giving them. Dawson bound himself to pay for the cattle at the rate fixed, "in such way and such manner as the said Hunter, Evans & Co. and the said City National Bank may require, and payable to them," as per agreement between Hunter, Evans & Co. and the bank and Dawson.

If the cattle should amount to more than the amount of the indebtedness to Hunter, Evans & Co. and the bank, then Dawson for the excess agreed to give O'Neal security payable not longer than October 1, 1880, with interest at 12 per cent. It was further agreed that the cattle were to be delivered to Dawson on or before May 20, 1880.

The papers having been executed, O'Neal proceeded to gather the cattle for delivery to Dawson and Dawson prepared to receive them, both incurring considerable expense in so doing, and on the 22d day of May, 1880, the gathering of the cattle was completed near Will's Point, at which place, on that day, Dawson, O'Neal, L. W. Evans, agent of Hunter, Evans & Co., the attorney of that firm, the attorney of the bank, and the attorney of O'Neal, and Gen. Henry E. McCulloch, the agent who had been selected and appointed by the bank and Hunter, Evans & Co. to accompany the drive and receive from Dawson for them the proceeds of the sale of the cattle assembled. The cattle consisted of 1,741 head, mostly branded O N, and their value at the contract price was $19,033. Hunter, Evans & Co. claimed that O'Neal owed them about $18,000. O'Neal disputed all of said claim except $9,915.74. The debt of the bank on that date was admitted to be $10,339.85. The attorney of Hunter, Evans & Co. wrote a note for Dawson to sign for the purchase money, which he did. It read as follows:

"$19,033. WILL'S POINT, TEXAS, May 22, 1880.

"One day after date, for value received, I promise to pay to the order of Hunter, Evans & Co. and the City National Bank of Fort Worth, Texas, at Fort Worth, Texas, the sum of nineteen thousand and thirty-three dollars, [563] with interest at the rate of ten per cent per annum from date until paid. This note is to be paid according to the terms and stipulations contained in a written contract entered into by and between John Dawson, Hunter, Evans & Co. and the City National Bank of Fort Worth, and dated March 20, 1880.

"J. M. DAWSON."

The note was handed, by direction of the bank and Hunter, Evans & Co., to Gen. McCulloch.

The cattle were delivered to Dawson by O'Neal with the knowledge and consent of Hunter, Evans & Co. and the bank, and were driven by Dawson through Will's Point to a point three miles west of the town; and on the same day Dawson sold, for cash, cattle to the amount of $3,419, which he paid over to McCulloch, who indorsed upon the note the following:

"Received on the within note three thousand four hundred and nineteen dollars ($3,419). May 22, 1880.

"HENRY E. MCCULLOCH, Agent."

Upon the basis of the undisputed claims the attorneys of the bank and of Hunter, Evans & Co. figured out the proportions in which the amount of Dawson's note should be distributed, and ascertained that of said note the bank was entitled to receive $9,715.78 and Hunter, Evans & Co. the remainder, $9,317.22, and both of them instructed General McCulloch that of every $1,000 paid in by Dawson he should send Hunter, Evans & Co. $482.52 and the bank $510.48. The $3,419 was then and there divided and paid over to said parties in that proportion, and the bank's attorney indorsed

O'Neal's note to the bank with a credit of $9,715.78 as "assumed by John Dawson," while a receipt was given to O'Neal by the attorney of Hunter, Evans & Co. "showing that cattle to the amount of $9,317.50 had been delivered to Dawson." There was no objection to the delivery of the cattle to Dawson, although before they were delivered there was a wrangle between O'Neal and the agent and the attorney of Hunter, Evans & Co. as to the [564] true amount of the indebtedness of O'Neal to that concern; but, on the contrary, the attorneys of the parties told Dawson that the cattle were his and he could drive them to market; and it appears to have been understood that he was going to drive them through Northwestern Texas and the Indian Nation to Kansas. Dawson and McCulloch went on with the cattle, getting out of Van Zandt County on the 23d or 24th of May, 1880, and soon after leaving Will's Point Dawson sold another lot of the cattle for something over $2,000, receiving in part payment therefor a draft payable to Hunter, Evans & Co. for $1,842, for which McCulloch entered on Dawson's note the following credit:

"Received on the within note a draft drawn by Frank Houstan for eighteen hundred and forty-two dollars, payable on the 22d day of next month. May 25, 1880.

"Henry E. McCulloch, Agent."

This draft was sent by McCulloch to Hunter, Evans & Co., and at the same time McCulloch drew a draft upon them in favor of the City National Bank for its *pro rata* part of said payment, $939.88; but when the latter was presented to Hunter, Evans & Co. for their acceptance they declined to accept it and appropriated the whole of this payment.

On the 31st of May, 1880, Hunter, Evans & Co. began suit in the District Court of Montague County, Texas, by petition, against O'Neal and Dawson, claiming to have a lien upon the stock of cattle then in the possession of John Dawson in said County of Montague, which lien they charged existed by virtue of a mortgage given them upon said stock of cattle by O'Neal, and sued out a writ of sequestration by virtue of which the Sheriff of Montague County took into his possession the property described in the petition and writ, to wit: 1,478 head of cattle of the aggregate value of $15,614.

The seizure was made on the second day of June and the cattle retaken by Dawson under a replevin or forthcoming bond on the 6th day of June. The bank furnished Dawson the [565] securities on his bond, and when he sold the cattle afterwards he paid the amount of his note and interest into the bank, which has ever since held the same to await the result of this suit.

On the 21st day of June, 1880, Hunter, Evans & Co. sued out a supplemental writ of sequestration directed to Van Zandt County, under which about 247 head of cattle were seized, and of these O'Neal replevied a few cows and calves valued at $110. On the 28th day of December, 1880, the cause was removed into the United States Circuit Court for the Northern District of Texas, at Dallas. O'Neal appeared first in the state court, and pleaded to the jurisdiction, which plea was pending when the record was filed in the United States Court. In 1881 the City National Bank of Fort Worth entered its appearance as a defendant. Both parties then, by leave of court, amended their pleadings. Hunter, Evans & Co. in their amended bill set up their dealings with O'Neal and the execution of the bill of sale and defeasance, and claimed that O'Neal owed them $18,616.49, February 1, 1880, on which they received during that month from the Texas and Pacific R. R. Company $625, and on the 22d day of May, 1880, from H. E. McCulloch, $1,668.56; that O'Neal gave a mortgage to the bank subject to their lien, but the bank, in February, 1880, claimed that its lien was superior to that of Hunter, Evans & Co., and threatened to litigate said question; that at that time the O N stock of cattle could not be gathered except at ruinous expense and great trouble, and Hunter, Evans & Co. knew that, pending litigation about them, the cattle while on the range would become worthless by straying off and being stolen and sold by other parties, and to avoid such litigation, expense, and loss of said cattle, Hunter, Evans & Co. entered into two certain agreements dated March 20, 1880, the two being in fact but one, the substance of which they proceeded to state. Complainants then stated the meeting at Will's Point on May 22d, and said that, without notice to them O'Neal delivered to Dawson stock of the value of $19,033, of which cattle to the amount of $3,419 were sold and the proceeds paid to McCulloch, who had been selected by Hunter, Evans & Co. and the bank, to accompany the cattle, of which amount complainants received [566] $1,668.88, and the bank the balance; that after the cattle were delivered O'Neal for the first time disputed over $8,700 of his indebtedness to complainants; that O'Neal made to Dawson a bill of sale for said cattle, and Dawson executed his note to complainants and the bank for $19,033, and complainants and the bank gave O'Neal a receipt for said amount; that O'Neal then failed and refused to secure the disputed amount of complainants' claim against him; that "Thereupon the parties to said agreement were remitted to their original rights and liens, and the said agreements thereby became abrogated and were thereafter of no force or effect;" and that complainants had since "treated said agreement as abrogated, abandoned, and of no effect." They charged that O'Neal, Dawson, and the bank confederated to cheat them, and that O'Neal at the time of the agreement in March represented that he owned a large number of cattle included in the bank's lien but not in complainants', and that if complainants would enter into said agreement said cattle should be embraced therein and included in the delivery to Dawson; that complainants, relying on the representations which were adopted by the bank, were induced to enter into the agreement with O'Neal, Dawson, and the bank, but the representations were false and known to be so by the parties; that O'Neal frequently acknowledged that $16,300 of complainants' claim was correct, and promised to meet complainants after said agreements and fix the amount of the indebtedness but did not do so, and, after the cattle were delivered to Dawson, then for the first time disputed $8,500, of complainants' claim; that he proposed to pay com-

plainants something over $4,000 in addition to the amount assumed by Dawson, but complainants rejected that proposition; and that complainants tried to obtain arbitration without effect, and O'Neal finally said that he had no property with which to secure his indebtedness to complainants; that his property was mortgaged, etc.; that O'Neal was hopelessly insolvent when he delivered said cattle to Dawson, and after said delivery owned no other cattle except about 300 head of said O N stock, not exceeding the value of $3,000, and included in complainants' bill of sale; that [567] O'Neal's acts and representations, after the delivery to Dawson, were with the view to delay complainants while Dawson hurriedly proceeded to drive the cattle out of Texas with fraudulent purpose; that all the cattle delivered by O'Neal to Dawson belonged to the O N stock and were included in the complainants' bill of sale, and he did not deliver to Dawson any cattle of the other marks and brands mentioned in the bank's mortgage; that long after the execution of the bill of sale to complainants, O'Neal, without complainants' knowledge or consent, sold cattle to the amount of $3,000 and converted the amount to his own use; that on account of the deceit and fraud of O'Neal, Dawson, and the bank, the said agreements of March 20, 1880, are null and void; that Dawson failed to account to McCulloch for $218; that he disposed of part of the stock and received in exchange about thirty head of yearlings, and was proposing to dispose of them without accounting, when stopped by the levy of the writ of sequestration; and that after Dawson replevied said cattle he sold them for $16,500, and now holds that amount.

Complainants prayed a decree against O'Neal for the full amount of their debt against him and for a foreclosure of their lien against O'Neal, Dawson, and the bank; and, if mistaken as to their remedy, they prayed for a decree against Dawson and the bank for the amount of money coming to them from the proceeds of said cattle under and by virtue of said agreements, and for general relief.

O'Neal, in addition to his plea to the jurisdiction, answered by a general denial, and further, that the notes held by complainants were simply executed to secure a margin of credit from complainants; and that complainants' claims were full of incorrect items, which he specified and which amounted to many thousand dollars.

The bank and Dawson filed joint and several answers, setting up the execution by O'Neal to the bank, on the 10th of December, 1879, of his note for $9,810.11, secured by mortgage on his home stock of cattle, branded H and O N, including horses, mares, and colts; that the [568] bills of sale to Hunter, Evans & Co. and the bank were intended to be mortgages; that Hunter, Evans & Co. knew better than the officers of the bank what O'Neal's financial condition was, and in all their transactions relied on their own knowledge of him and his property; that it was at the special instance and request of complainants that the bank advanced O'Neal the money out of which his indebtedness to it grew, and complainants promised to pay the same; that the bank did intend to institute suit for the purpose of deciding the validity and priority of its own and complainants' liens; that they believe the motives of Hunter, Evans & Co., in entering into said agreements, were the knowledge that they had not in fact a debt against O'Neal of the amount claimed by them, and knew they were primarily liable to the bank for the payment of its debt against O'Neal, and because by entering into said agreements they would escape from responsibility to the bank and from a controversy with the bank as to the validity of their lien, and obtain an equal lien on property they had no lien upon before, and would without surrendering the disputed amount of their debt against O'Neal effect a collection without loss of the uncontested part; that the reservation in said agreement, that if it should fail to be carried out and consummated, then no statement or recital therein should be construed "to be an abandonment of any right, lien or security held by any of the parties hereto," applied only to the consummation of the pending transaction; and that when the sale from O'Neal to Dawson was perfected by delivery, on the 22d of May, 1880, said agreement took final effect. The circumstances attending the execution of the agreements and the transactions at Will's Point, the execution of Dawson's note, payments made on it, etc., were set out, and defendants said that the objects of the two agreements between O'Neal, the bank, and Hunter, Evans & Co., and Dawson, the bank, and Hunter, Evans & Co., were double—one was to sell the cattle to Dawson free from every lien before existing against them, but charged with a new lien or trust, to be enforced through the agency of H. E. McCulloch; the other to obtain a settlement between some, but not all, of said parties, and therefore all of the provisions of one are not provisions of the other agreement; that by the [569] agreement of March 20, 1880, and the purchase of the cattle by Dawson, the original liens of complainants and the bank on the cattle sold Dawson were extinguished, and said new lien substituted therefor; that complainants knew before the delivery of the cattle to Dawson the exact amount of their debt that was disputed by O'Neal; that Dawson used despatch in driving the cattle, because, as was known to complainants, he purchased them to fulfill contracts of sale previously made by him, and he commenced with the knowledge and consent of complainants to drive said cattle to their destination out of the State of Texas; that at the date of the delivery to Dawson, O'Neal owned a large number of cattle, not included in the sale and delivery to Dawson, which he offered to deliver upon the same terms and for the same purpose, if the time required for their being gathered was allowed, but complainants agreed that the cattle then gathered should be delivered; that at the time of the delivery to Dawson, O'Neal owned of the O N stock on the range in Van Zandt County, besides those delivered to Dawson, as many as 350 head, of the value of $5,250, as complainants well knew, and which were seized a few days afterwards by a writ of sequestration, wrongfully sued out by complainants; that O'Neil was solvent at the time of the sale and delivery to Dawson, and offered to secure Hunter, Evans & Co. by mortgage, which was not executed, because they required a power of sale for cash in ten days after the amount in dispute had been set-

tled; that O'Neal was always ready to give complainants security, but they refused to take it uncoupled with the authority to foreclose at once; that the cause of the failure of negotiations between complainants and O'Neal was that complainants had conceived the purpose of seizing Dawson's property under such circumstances as they believed would lead to its being surrendered to them by Dawson rather than suffer the damages, delays and losses which might otherwise ensue; that the officers of the bank and Dawson did nothing at any time with the view to deceive or injure complainants in any way; and if O'Neal had any such purpose he did not communicate it to [570] either of them, but they believed and had every reason to believe that O'Neal was acting with the utmost good faith towards complainants. They denied that the bank or its officers, previous to the date of the agreement, had any knowledge of the number, value, or situation of O'Neal's cattle, other than O'Neal's statements to them. They said they never pretended or represented to complainants, or either of them, or any agent of theirs, that said bank, or any of its officers, or agents, had any such knowledge, and they denied that they, or either of them, deceived complainants, or either of them, or caused them to be deceived in any respect. They denied all collusion to get possession of the stock of cattle or to have said agreement executed before a final settlement between O'Neal and complainants. They denied that Dawson ever disposed of any of the cattle otherwise than he was authorized to do by said agreement and as the owner thereof, and that they had deceived McCulloch in any respect. They averred that complainants purposely failed to make the bank a party to their suit in Montague County, and brought said suit there in a court which had jurisdiction neither of the property nor of the persons of the defendants.

Defendant Dawson charged that complainants, by their wrongful seizure of said cattle by the writ of sequestration, subjected him to great expense, loss and damage, which he specified, and asked to have allowed by way of reconvention; and that he had been damaged by reason of the malicious suing out of said writ of sequestration in the further sum of $10,000, for which he asked punitive damages.

On the 18th day of May, 1885, the court overruled the defendants' exceptions and O'Neal's plea to the jurisdiction and entered a decree that Dawson's note be divided between complainants and the bank *pro rata* according to their actual demands against John A. O'Neal; that on May 22, 1880, O'Neal was indebted to the complainants in the sum of $18,333.68 and to the bank in the sum of $10,339.85; that complainants were entitled at said date, out of the Dawson note, to the sum of $12,169.64, less the sums received by them from the proceeds of said note, to wit: the sum of $1,668.69, paid May 26, 1880, and the sum of $1,842, paid June [571] 26, 1880, with interest from May 22, 1880; that Hunter, Evans & Co. recover from Dawson and his sureties the sum of $8,659.15 principal and $4,329.67 interest, making a total of $12,988.82, with interest from date of decree at the rate of 10 per cent, and costs; that complainants had received the sum of $2,424.56 in the value of cattle sequestered herein and replevied by complainants, of which sum the bank was entitled to $1,811.50; and that the bank recover of complainants said sum, with execution. It further appearing that O'Neal replevied $110 worth of cattle sequestered on the 20th of July, 1880, it was decreed that complainants recover of Mary O'Neal, administratrix, and the sureties of O'Neal on the replevin bond, $110, with interest at 8 per cent per annum from July 20, with execution, the proceeds of said collection to be distributed *pro rata* between complainants and the bank; that the complainants recover of and from the estate of O'Neal, to be paid in the due course of administration, the sum of $4,613.81 and costs, less any sum or sums received by complainants from the execution to be issued against O'Neal's sureties; and that in the meantime the costs of this suit be paid by complainants and the bank *pro rata*.

Mr. **A. S. Lathrop** for appellants.
Mr. **Sawnie Robertson** for appellees.

Mr. Chief Justice **Fuller** delivered the opinion of the court:

The action of the parties at Will's Point on the 22d day of May, 1880, so far carried out and consummated the agreements of March 20, that neither the bank nor Hunter, Evans & Co. could thereafterwards insist upon superiority of lien as between themselves; and we are satisfied, upon a careful review of the evidence, that Hunter, Evans & Co. were not entitled to rescind the agreements or treat them as annulled on the ground of fraud in the obtaining of their execution.

Many circumstances are clearly made to appear which rendered it natural for Hunter, [572] Evans & Co. to desire to make just such agreements as they did make, and are inconsistent with the theory that they did not act with their eyes open.

Although they claimed a first lien upon the larger part of the cattle in question, yet this was contested by the bank on the ground of the invalidity thereof under the statute, as against its mortgage. And while it is denied on the part of Hunter, Evans & Co., the evidence of the vice president of the bank is explicit to the effect that the line of credit extended to O'Neal by the bank was on the strength of the agreement of William Hunter to guarantee the payment of O'Neal's drafts; and that, as to the particular draft which created the indebtedness due the bank, the bank neglected to take a bill of lading because it relied on the statement of Hunter that the draft would be honored. Questions such as these demanded solution, and it is not to be wondered at that Hunter, Evans & Co., as they say in their bill, to avoid "litigation, expense and loss," entered into these contracts. Again; a portion of his alleged indebtedness to Hunter, Evans & Co. had always been disputed by O'Neal. O'Neal had more cattle than those named in the bill of sale to Hunter, Evans & Co., was believed to have other property, and there is considerable evidence tending to show that his financial condition need not have been rendered as desperate as it subsequently apparently became. It was desirable that the cattle should be sold, and the sale to Dawson was agreeable to both Hunter,

Evans & Co. and the bank, if an agreement could be made in respect to the proceeds.

In the light of these circumstances, it would require a strong case of definite misrepresentation as to facts, as distinguished from mere matters of opinion, to be made out before these agreements could be declared null and void.

Complainants aver, in substance, that O'Neal represented that he owned a large number of cattle not in the O N brand, then running in the range in Van Zandt County, which were not included in the bill of sale to Hunter, Evans & Co., but were included in the bank's mortgage, and which were "quite or very nearly sufficient in value to pay the said O'Neal's indebtedness to the said bank," and that they [573] were induced to enter into said agreements in reliance on said representations, which were false.

But we think the evidence fairly preponderates that no such statements were made, and certainly not to the bank's knowledge, and that the testimony to the contrary is given under a misapprehension arising from O'Neal's expressing his belief that he had cattle enough in all to pay both debts. And this inference is heightened by the fact that the tendency of the evidence is to establish that William Hunter, the agent of Hunter, Evans & Co., was acquainted with O'Neal's cattle, and must have known that they were principally of the O N brand. If the contention that O'Neal fraudulently disputed so large a part of the claim of Hunter, Evans & Co. against him and then fraudulently refused to secure the disputed amount, were sustained by the evidence, neither the bank nor Dawson should be held bound by such conduct on his part without convincing proof that they participated or acquiesced in such fraud. And it would have been the duty of Hunter, Evans & Co., if they designed to attempt to set up fraud in these particulars, to have refused to go forward in consummation of the agreements on the 22d day of May at Will's Point.

When the parties met there on that day, O'Neal and Dawson having been in the mean time put to a large expense on the strength of the agreements, in gathering and caring for the cattle when and as gathered, the amount due from O'Neal to Hunter, Evans & Co. had not been determined, and O'Neal insisted that their account was erroneous to the extent of between eight and nine thousand dollars. The undisputed portion of the claim was finally set at $9,915.74. The debt due the bank was admitted to be $10,339.85, and the price to be paid for the cattle by Dawson, $19,033. The attorneys of the bank and Hunter, Evans & Co. proceeded to ascertain what the *pro rata* shares in the $19,033 of the bank and Hunter, Evans & Co. would be, and placed the bank's at $9,715.78 and Hunter, Evans & Co." at $9,317.22, these being the proportions that the undisputed debt due the bank of $10,339.85 and the undisputed debt of $9,915.74 due to Hunter, Evans & Co. were respectively entitled to receive.

[574] McCulloch had been selected as the party to accompany Dawson "in driving said cattle from Texas to any point said cattle may be sold," to "have the legal possession of said cattle," and to "receive the proceeds of the sale of said cattle from any and all purchasers of said cattle to the extent and amount of said indebtedness assumed by said Dawson," namely: inasmuch as the value of the cattle delivered to Dawson was not equal to the amount of the indebtedness, "*pro rata* to the extent of the cattle received." The undisputed debts due to Hunter, Evans & Co. and the bank, the price of the cattle, and the proportions in which the proceeds were to be distributed, having been arrived at, Dawson signed and delivered the note for $19,033; O'Neal executed an absolute bill of sale to him; the cattle were delivered; and McCulloch and Dawson started on the drive, it being understood that the cattle were to be driven to market beyond the boundaries of the State. On the same day Dawson sold cattle to the amount of $3,419, which were receipted for on the note by McCulloch, and which was divided *pro rata* between Hunter, Evans & Co. and the bank, as agreed upon by their representatives at the time, Hunter, Evans & Co. receiving $1,668.56. On the 25th of May McCulloch received, from further cattle sold, a draft for $1,842, payable June 22, which being payable to Hunter, Evans & Co., was remitted to them, but McCulloch at the same time drew a draft on Hunter, Evans & Co. in favor of the bank for the bank's share, according to the proportion agreed upon, namely, $939.88, McCulloch having been instructed by the attorneys that of every $1,000 received he should send Hunter, Evans & Co. $482.52 and the bank $510.48.

In our judgment the execution and delivery of his note by Dawson, and the delivery of the cattle to him, and O'Neal's bill of sale, constituted, under the circumstances, the consummation of the written agreement so far as he was concerned. The cattle belonged to Dawson, subject to being retaken by Hunter, Evans & Co. and the bank, if Dawson did not sell them by the first of October. All that remained for Dawson to do was to sell the cattle and pay over the proceeds to McCulloch until his note was extinguished.

It may be conceded that Hunter, Evans & [575] Co. supposed on the 22d of May that O'Neal would be able to secure the balance due; but Dawson did not agree, as we view the transaction, that O'Neal should do so, nor was there any reason why he should, if he paid the price agreed upon for the cattle. The controversy, if any, between the other parties, would be transferred to the proceeds.

What they all desired and what they all agreed upon was a sale of the cattle for their value, and the collection of the proceeds of such sale, and this was effected in the manner stated by the arrangement with Dawson, who, however, was under no obligation after the cattle were delivered to him, except to account for their proceeds to the amount of the note he had given, or surrender them in case of failure to realize before October 1st.

We regard the action of Hunter, Evans & Co., in commencing suit on the 31st day of May, in the District Court of Montague County against Dawson impleaded with O'Neal, and taking possession of Dawson's cattle by writ of sequestration, as unjustifiable, and hold that Dawson is entitled to recover such damages as he actually sustained, by way of reconvention, in this suit. We are asked to dismiss the bill altogether, and if it had remained, as

originally filed, a bill for the foreclosure of the chattel mortgage given Hunter, Evans & Co., which mortgage had been in effect disposed of by the agreements of March 20th, that course might have been proper; but the parties repleaded, and the bill as amended being in the alternative, and seeking the ascertainment of the indebtedness of O'Neal to complainants, and the payment of their share of the proceeds of the cattle, we think it should be retained and go to decree, upon being remanded, in accordance with the views herein expressed. The agreement between Hunter, Evans & Co. and the bank, and O'Neal, provided that, in case of any difference or trouble about the amount of the indebtedness of O'Neal to Hunter, Evans & Co., or the bank, the disputed amount, when determined by agreement, suit, arbitration, or otherwise, should be paid from the proceeds of the sale to Dawson, or from security furnished [576] by O'Neal; and the circuit court held that when the amount of the claim of Hunter, Evans & Co. was determined in the suit, they should participate *pro rata* in the fund derived from Dawson's note, and from property of O'Neal realized upon outside of that.

As it is clear that O'Neal was liable for very much the larger part of the amount disputed by him, so that the *pro rata* proportions arrived at at Will's Point were incorrect, and as we do not perceive that the bank is so situated as to be equitably entitled, under all the circumstances, to insist, upon the principles of estoppel or otherwise, that the proportions as then estimated must necessarily remain unchanged, we are not inclined to challenge the conclusion reached by the circuit court in this regard.

It appears from the evidence that after Dawson replevied the cattle he sold them, and paid the balance due upon his note into the bank to abide the result of this suit; but at what date this deposit was made, and the exact amount of it, does not appear. The sums of $3,419 and $1,842 had already been paid upon the note, leaving a principal sum of $13,772; but the note bore 10 per cent interest, which must be added down to the date of the payment into the bank. Upon a supplementary writ of sequestration, dated June 21, 1880, and directed to the Sheriff of Van Zandt County, 247 cattle belonging to O'Neal were taken, of which he replevied twenty-one cows and calves worth $110, and gave bond therefor July 17, and on the 20th of July the remainder of said cattle were delivered to Hunter, Evans & Co. being valued by the sheriff at $2,424.56, Hunter, Evans & Co. giving bond in the penal sum of $5,000. These cattle, it is testified to by O'Neal and Allen, were worth $15 a head, with the exception of a few calves, which were worth about $7 a head. Hunter, Evans & Co., sold 196 of them for $2,141.50. The circuit court found their value to be that fixed by the sheriff, namely; $2,424.56, and with that we are content. In the view which we take of the conduct of Hunter, Evans & Co. they are to be held to have received this $2,424.56 July 20, 1880, and to account also for $110 as of July 17, 1880, [577] leaving them to pursue for their own benefit the sureties on O'Neal's bond. The fund, therefore, to be divided *pro rata* consists of the amount of the Dawson note, with such interest as accrued thereon down to the date of the payment by Dawson into the bank, and of the $2,424.56 and of the $110.

As of what date shall the proportions in which this fund is to be divided between Hunter, Evans & Co. and the bank be ascertained? We believe it most equitable that this *pro rata* division should be determined as of the date that Dawson paid the money into the bank.

In arriving at the amount actually due from O'Neal to Hunter, Evans & Co. for the purpose of distributing the fund, we think the account attached to the bill may be treated as sufficiently shown by the evidence to be correct, with the exception of some of the interest charges, which are calculated at 10 per cent and which ought not to be compounded. The rate of interest in the State of Illinois in 1879-80 was 6 per cent; but in all written contracts it was lawful for the parties to stipulate or agree that 8 per cent per annum should be paid, and it was provided that any person or corporation who should contract to receive a greater rate of interest or discount than 8 per cent should forfeit the whole of said interest so contracted to be received, and be entitled only to recover the principal sum. R. S. Ill. 1881, chap. 74, p. 650.

In the State of Texas the rate of interest when no specified rate was agreed upon was 8 per cent, which applied to open accounts from the first day of January after the same were made. The parties to any written contract might agree to and stipulate for any rate of interest not exceeding 12 per cent per annum. R. S. Texas, 1879, p. 433.

We agree with appellees' counsel that the Statutes of Texas do not apply, and are of opinion that Hunter, Evans & Co. are entitled to receive interest at no greater rate than that fixed by the Laws of Illinois. As usury was not pleaded by O'Neal, we shall not disturb in the account the discounts of his notes and the $50 interest charged as of August 20; but we are not convinced that O'Neal acquiesced in [578] any of the charges of interest after that. These charges up to February 20, 1880, amounted to $875.76. The balance shown February 20, 1880, was $17,871.34, and $875.76 being deducted, leaves $16,995.58. Taking this as a basis, interest may be calculated on the average monthly balances after August 20, 1879, at the rate of 6 per cent, down to the date at which Dawson paid the balance due on his note into the bank and then added to the principal sum. This will give the amount due to Hunter, Evans & Co. as of that date if they had received no payments thereon in the intermediate time.

The bank's debt should be ascertained as of the same date, namely, the date when Dawson paid the balance on his note into the bank, by adding the interest to O'Neal's note held by it of $9,810.11, dated December 10, 1879, according to its terms.

The proportion of the fund to go to each of the debts so ascertained can then be arrived at. From the *pro rata* amount to come to Hunter, Evans & Co. should be deducted the payments of $1,668.56, May 22, and $1,842, June 22, and the sum of $110, July 17, and of $2,424.56 as of July 20, with interest, and the balance of the *pro rata* amount should be decreed to be

paid out of the money deposited by Dawson as of the date of such deposit, the bank retaining the remainder, and at the same time provision should be made for the production and cancellation of Dawson's note, the discharge of the sureties upon his forthcoming or replevin bond, and the payment of his claim in reconvention.

While the case was pending in the circuit court, John O'Neal died and the cause was revived as to Mary O'Neal, his administratrix.

She did not appeal, and the bank and Dawson petitioned the court to be allowed an appeal as between themselves and Hunter, Evans & Buel, the complainants, which was ordered by the court as to said two defendants, who perfected their appeal accordingly.

This was proper, as with the matters complained of by the bank and by Dawson, O'Neal's [579] estate had no concern. The total balance of the indebtedness due from that estate, after all payments and money realized were applied, would be the same irrespective of the proportion of such balance found due to each of the two creditors. The decree was severable in fact and in law, and the bank and Dawson were entitled to prosecute their appeal without joining their codefendant, who did not think proper to question the judgment.

And while, in order to a correct distribution of the fund, it becomes necessary to find the indebtedness of O'Neal to Hunter, Evans & Co. and to the bank, this is not a determination of the amount remaining due after the distribution is made, with intent to a decree over against O'Neal's estate therefor, as the decree originally entered, so far as relates to that, stands unappealed from by either of the parties concerned.

The decree of the Circuit Court is reversed, with costs, and the cause remanded with directions to proceed in conformity with this opinion.

---

[688]

THE SCHRAEDER MINING AND MANUFACTURING COMPANY,

Plff. in Errr.,

v.

ELISHA A. PACKER.

(See S. C. Reporter's ed. 688-700.)

Survey of land in Pennsylvania, when conclusive —consent to boundary between two owners— effect of on cutting timber—removal of cause from state court.

1. In Pennsylvania, after a survey of public land has been returned more than twenty-one years, the presumption that it has been actually and legally made is conclusive and cannot be controverted by a party claiming under a junior survey.
2. Owners of adjacent tracts of land are not bound by consent to a boundary which has been defined under a mistaken apprehension that it is the true line, each claiming only the true line wherever it may be found; and in such case, neither party is precluded or estopped from claiming his own rights under the true one, when discovered.
3. Nor can such consent, in an action of trespass *quare clausum fregit*, upon the theory of leave and license given, operate as an estoppel upon the claim of a plaintiff to recover damages to the extent of the value of the timber taken any more than it can under the plea of *liberum tenementum* devest his title to land on which the alleged cutting and removal were committed.
4. A petition for removal of a cause from a state court into the circuit court, on the ground of prejudice or local influence, is filed in time, if filed before the final hearing of the case.

[No. 118.]

Argued Dec. 10, 11, 1888. Decided March 5, 1889.

IN ERROR to the Circuit Court of the United States for the Western District of Pennsylvania, to review a judgment in favor of plaintiff in an action of trespass *quare clausum fregit* for timber felled and carried away from plaintiff's land. *Affirmed.*

This action was brought in the Court of Common Pleas of Bradford County, Pa., and thence removed to the Circuit Court of the United States, on the ground of prejudice or local influence.

The facts are stated in the opinion.

Messrs. William T. Davies, Edward Overton and **John F. Sanderson** for plaintiff in error.

Mr. **D. C. Dewitt** for defendant in error.

Mr. Justice **Lamar** delivered the opinion of [689] the court:

This is an action of *trespass quare clausum fregit* for timber felled and carried away, originally brought in the Common Pleas Court of Bradford County, Pennsylvania, where, after certain amendments of the record with respect to the parties thereto, the case stood as *Elisha A. Packer, Plaintiff*, v. *The Schraeder Mining and Manufacturing Company.* A judgment of that court, on a verdict in favor of the defendant, having been reversed by the supreme court of the State, and the case remanded for a new trial (97 Pa. St. 379), and three other verdicts having been set aside by the trial court, the case was, on application of the plaintiff, removed into the Circuit Court of the United States for the Western District of Pennsylvania on the [690] ground of diverse citizenship of the parties.

The declaration averred that the defendant, by its agents and employés, entered upon plaintiff's lands in the years 1867, '68, and '69, and cut down and took therefrom over two millions of feet of timber, amounting in value to $15,000.

The defenses pleaded to the action were: (1) that defendant did not commit any of the trespasses complained of on plaintiff's land; (2) that the land on which the alleged trespass was committed did not belong to the plaintiff, but was the property of the defendant itself. It was also contended by the defendant that the plaintiff, through his agent, had aided, by consent and acquiescence, in establishing a boundary between the two contiguous tracts of the parties, up to which he, the plaintiff, agreed that the defendant's agents and officers could cut and carry away as much timber as they pleased. Issue having been joined upon these pleas, the case was tried by a jury, resulting in a verdict in favor of the plaintiff for the sum of $8,000, upon which judgment was rendered. The defendant sued out this writ of error.

Upon the trial the plaintiff, in support of his claim to the land in dispute, introduced evidence deducing his title from a warrant granted by the Commonwealth of Pennsylvania to one George Moore, for a tract of 375 acres of land. The official return shows that the warrant was

issued on the 27th of April, 1792, and that the survey was made for the said George Moore on the 21st of November, 1792. The survey is thus described in the official return:

"A certain tract situated on the waters of Towanda Creek, Luzerne County, beginning at a post; thence by land of Joseph Betz and Henry Betz north twenty-nine degrees east, three hundred and eighteen perches to a hemlock; thence by vacant land north sixty-one degrees west, two hundred perches to a post; thence by the same and land of General Brodhead south twenty-nine degrees west, three hundred and eighteen perches to a post; and thence by land of Samuel Cooley south sixty-one degrees east, two hundred perches to the beginning, containing three hundred and seventy-five acres and allowance of six per cent for roads," etc.

[691] As evidence to show that the land in dispute is part of this George Moore tract, the plaintiff produced copies of the returns of these surveys, called for as adjoinders, the location of which, it is claimed, was fixed by the evidence beyond dispute. And in connection with that evidence he called several surveyors, who gave testimony, with maps and other returns, tending to show, by identifying the hemlock northeast corner, and other marks on the ground corresponding with the survey, that the Moore tract, located according to its calls, embraced the land in dispute.

The defendant, on his part, introduced evidence to show that the land in dispute was a portion of a tract of about 409 acres, surveyed March 24, 1794, in the warranty name of Andrew Tybout. He introduced a copy of a warrant and return of the Tybout tract and a patent from the State to one Daniel Brodhead for that tract. Evidence was also given by defendant showing that original marks were found on certain trees on the north, east, and south lines of the Tybout survey, and that the hemlock northeast corner, the sugar southeast corner, and the hemlock sapling southwest corner, called for in the return, were marked respectively as corners in 1794. The hemlock sapling had disappeared, but the defendant's surveyor determined the age of the corner by a witness found there, and by other signs.

Defendant also introduced evidence of certain surveyors, tending to show that no marks upon the ground had ever been found for the Moore survey on the line north from the hemlock sapling corner, or on the line west from the hemlock northeast corner thereof, which bore the date of such survey. In this connection, it put in evidence certain official maps from the land office of Pennsylvania, showing the location of what is known as the General Brodhead lands, lying west of the west line of the Moore survey extended southerly; and also produced evidence tending to show that a line bearing marks dating 1792 was found from the sugar tree, the southeast corner of the Tybout tract, to the hemlock sapling corner mentioned, and that the sugar tree was marked as a corner of 1792, and that a corner of 1792 was found
[692] at the hemlock sapling corner. Other evidence was introduced by the defendant designed to show the nonexistence of an actual survey of the Moore warrant according to the official return thereof, the details of which need not be stated here.

In connection with this contention the defendant offered to give further evidence, founded upon examinations made upon the ground by surveyors to show that the Moore warrant was not actually surveyed on the ground according to its return of survey, but was surveyed, together with the Cooley and other warrants to the south of it, in one block, of which the Moore was the northern member; that the north line of that block, if actually surveyed upon the ground in 1792, was run between the hemlock sapling and sugar corners, corresponding to what was claimed by the defendant to be the south line of the Andrew Tybout tract; that no line of 1792 was surveyed on the ground for the Moore warrant north from the hemlock sapling corner, nor west from the hemlock northeast corner of the Tybout tract; and that the line south from the hemlock northeast corner aforesaid was run for warrants to the east of said line, and was merely adopted by the return of the Moore survey. To this evidence the plaintiff objected on the ground that twenty-one years and upwards having elapsed from the date of the Moore survey, there was a presumption *juris et de jure* that the said survey had been made as returned, and that the evidence was, therefore, inadmissible. The court sustained this objection and excluded the evidence so offered, to which ruling the defendant excepted.

The defendant also contended on the trial of the case that the plaintiff was estopped from setting up any claim to the land in dispute, by reason of certain alleged acts and declarations of his, and of his duly authorized agent, one Jacob De Witt.

The evidence which it produced on this subject tended to establish the following facts: Prior to the year 1866, the plaintiff, at that time a resident of New York City, purchased a large amount of lands lying east of and adjoining those of the Schraeder Land Company, the predecessor of this defendant, and including the tract in controversy, none of which lands he had ever seen. Soon after that purchase he [693] employed Jacob De Witt as his agent and attorney in the management and protection of said lands from depredations, etc., and gave him full power and authority to carry out the purposes of his agency.

The land company having in contemplation the erection of a saw mill and extensive lumbering operations, and being desirous of painting a boundary line of its lands as a guard against trespassing upon the lands of adjoining owners, informed De Witt of its intentions; and, upon his assent thereto, as plaintiff's agent, the company employed on its own responsibility one Z. F. Walker to run and paint such line. Walker knew nothing of any conference having taken place between De Witt and the company upon the subject of the painted line. He was paid for his work by the company alone, and his instructions to paint the boundary line of the Schraeder lands were received from it.

Having in his possession certain old maps of the lands in that neighborhood, including both the Moore and Tybout tracts, some of which

showed the interference between these two tracts, and certain old field notes made by a surveyor in 1828 while surveying the Brodhead lands, Walker went upon the lands and painted a line on the north, east, and south sides of the Tybout tract, according to its location claimed by the defendant.

Afterwards, De Witt, having examined certain portions of this painted line, assented to it as a correct boundary line between the lands of the company and those under his management and control.

This occurred in the summer of 1866. In the following fall two members of the executive committee which had charge of the affairs of the land company, went to New York City to see the plaintiff and assure themselves of De Witt's authority for establishing the painted line. They saw plaintiff and informed him of the transaction that had taken place with regard to the running of the painted line. He replied to them that he had never been on the lands, but that De Witt was his attorney and agent in the matter, and what De Witt did met his approval. In 1869, after most of the cutting had been done, De Witt again expressed himself as satisfied with the painted line. [694]

A question also arose in the progress of the trial as to the time to which the plaintiff was entitled to claim damages, it being contended by the defendant that he had sold and conveyed the lands in question to Jacob De Witt on the second of November, 1869, by an absolute deed of general warranty, a copy of which was introduced in evidence. The plaintiff, however, claimed that that deed was to be considered not alone but in connection with a certain other agreement between the parties thereto, which was also introduced in evidence, and that when so considered, it showed that title to the lands embraced in it did not pass to De Witt until October 1, 1870. Plaintiff's oral evidence on this point was also to the same effect.

So far as the record shows, there was no serious dispute between the parties as to the cutting down, removal, and appropriation of the timber complained of, or as to the amount and value thereof, or as to the fact that all of the alleged trespasses had been committed within a certain boundary marked by a line of trees blazed and painted white, known as the painted line, which was claimed to have been established by consent of the parties.

It also appears from the record that the hemlock northeast corner tree, called for in the George Moore return of survey, was identical with the hemlock northeast corner called for by the Andrew Tybout return of survey, and that the said surveys, by running from this common corner, according to their respective returns, would overlap and include within the same boundaries about 325 acres, being the tract on which the cutting, etc., complained of occurred.

The first and decisive question is, Who owned this overlapped land at the time the timber was cut, the plaintiff who holds title to the Moore warrant and survey of 1792, or the defendant holding title under the Tybout warrant and survey of 1794? As we have seen, it was clearly established that the adjoinders to the location on the ground corresponded exactly with the adjoinders named in [695] the official return, so that the latter was a photograph of the former. It was also proved that the hemlock northeast corner, called for in the Moore survey, was identified; that that hemlock was the northwest corner called for in the Henry Betz return of survey, which adjoined the George Moore survey on the east for about two thirds of the length of its line, and was separated therefrom by an old line marked as early as 1784, and re-marked in 1792 and subsequent years, extending several miles southerly; that south of the Henry Betz survey and George Moore survey on the east is the Joseph Betz tract; and that both of these Betz tracts were surveyed on the 4th of July, 1793, and were returned into the land office on the 16th of April, 1794, at the same time the return of the Moore survey was made, their location being undisputed.

It is shown that along the southern portion of its western line the George Moore is bounded on the west by a tract in the warranty name of Robert Irwin, surveyed November 22, 1792, and returned into the land office the same day as the Moore survey. This Irwin tract was a part of a large body of lands known as the General Brodhead lands, whose eastern line extended southerly, identified by the surveyors by marks bearing date 1792; and that on the south the George Moore adjoins the Samuel Cooley survey, whose location is not disputed.

We concur with the circuit court that the Moore survey, if located according to its calls as made in the official return in the land office, would include within its limits the tract where the timber was cut by the defendant and its agents. The question then is presented, Why should it not be located according to these calls? That the Moore warrant is older than the Tybout warrant is indisputable. That it was regularly and legally granted on the 24th of April, 1792, to Moore is not questioned; and that it was legally surveyed in the same year appears on the face of the official return duly certified. All the presumptions favor the regularity, fairness, and legality of a survey thus authenticated. The calls for adjoining surveys are regarded by the Law of Pennsylvania as high and important evidence in determining the true location of a survey superior in character to the courses and distances therein described, and next in conclusiveness to living monuments and original marks upon the ground. Upon what ground, then, can it be contended that the adjoining surveys, a living monument, and many of the marks upon the ground, called for in the official return, should not determine the location of the George Moore survey? The only conceivable ground is the one asserted by the defendant below, that there was, as matter of fact, no such actual survey as the one exhibited in the official return; that, in other words, the Moore warrant was never actually surveyed on the ground according to its return of survey. In support of this contention the defendant offered evidence to show that the official return was a chamber location, never having been made in fact. The evidence was rejected by the court, upon the ground, as stated in its charge to the jury, that "an old survey like that of the George Moore cannot be questioned at this late day by any parties claiming under a junior title, whether that title took [696]

its origin within twenty or twenty-one years of the older survey, or after that time." This action and ruling form the basis of numerous assignments of error. We think the court did not err, either in rejecting the testimony or in the charge. Many of the authorities cited by the counsel for plaintiff in error, carefully examined, support the principle laid down by the court with reference to chamber surveys in Pennsylvania.

At an early day in that State great abuses crept into the administration of its land office system, growing out of the illegal acts of the surveyors, who, instead of going into the field and establishing the lines and marking corners upon the ground, would make drafts on paper of pretended surveys, and return them into the land office as duly certified. These false, fraudulent pretenses of surveys, never made, were called chamber surveys. Owing to the confusion and uncertainty of titles arising from the numerous patents issued, and the large quantities of land purchased in good faith under these fabricated surveys, the courts found it expedient, for the common good and the promotion of peace and quiet in the community, to hold that when a warrant was returned [697] as regularly surveyed, and this official return allowed to remain unchallenged for twenty-one years, it was strong presumptive evidence of the regularity and legality of the survey. Many of the earlier decisions in Pennsylvania, cited by the counsel for plaintiff in error, held this presumption to be *prima facie* only, and subject to rebutting proofs. But the later adjudications are in harmony with the doctrine announced by the circuit court. Such was the decision of the supreme court in the case of *Packer* v. *Schraeder Mining & Manufacturing Company*, 97 Pa. 379.

There is nothing in the case of *Clement* v. *Packer*, 125 U. S. 309 [31:721], contrary to this view. The decision in that case had no application to the subject of chamber surveys. The controversy arose as to the location of one line of a tract, the actual survey of which was admitted and insisted on by both parties. The only question was as to the true mode of ascertaining the location of the disputed line, the plaintiff below contending that the survey as marked upon the ground would properly define its position, whilst the defendant contended that the location should be determined by the courses and distances described in the survey, disregarding the marks called for and said to be found on the ground.

The court decided that the true mode of ascertaining the lines of a survey was to run them according to the marks and monuments on the ground made by the surveyor at the time of the survey, along with the lines and distances in the official return when these latter corresponded with such marks and monuments; but in case of a conflict and variance, the original marks and monuments were to prevail and determine the location of the line in dispute. It also held that after the lapse of twenty-one years from the return of a survey, the presumption is that the warant was located as returned by the surveyor of the land office; and that in the absence of rebutting facts, the official courses and distances will determine the location of the disputed line or corner; but that this presumption is not conclusive, and may be rebutted by the proof of original marks and monuments tending to show that the actual location on the ground was different from the official courses [698 and distances. The whole issue in the case was as to the relative weight to be attached to these two classes of evidence in case of a discrepancy between them, and whether the period of prescription could be invoked in behalf of the one class as conclusive against the other. The contention, as in this case, that no survey was actually made, and that the official return of the survey relied on was a chamber survey, presents a different question, and involves the application of a different principle. And it may now be regarded as settled by the latest adjudications of the Supreme Court of Pennsylvania that, after a survey has been returned more than twenty-one years, the presumption that it has been actually and legally made is conclusive, and cannot be controverted by a party claiming under a junior survey.

The specifications of error, from eight to fifteen inclusive, are based upon the charge of the Circuit Justice with reference to the alleged consent of Jacob De Witt, the agent of Packer, to the establishment of what is known as the painted line, up to which it was understood that the Schraeder Company might cut the timber.

The court charged the jury that the evidence relating to this painted line, and to the assent given to it by DeWitt, and afterwards approved by Packer, could have no influence on the question of title under the plea of *liberum tenementum*; that the assent was given not to settle a dispute, but to acquiesce in the running of a line about which no dispute had then arisen, and upon the supposition that the person engaged in running it knew where the true lines were; that it was an acquiescence resulting from a pure mistake and error, which should not bind the plaintiff or estop him from claiming his rights when he discovered the mistake. We think the court in its charge brought out clearly and fairly before the jury the distinction between a mutual undertaking to adjust and settle a doubtful and disputed dividing line, in case of conflicting titles, on the one hand, and, on the other, the consent of parties to mark a boundary supposed to run between undisputed tracts, but in ignorance and mistake of both as to the existence of any conflict. [699

Upon the claim of the plaintiff in error that the consent of Packer to the running of the painted line, amounted to a leave and license to cut the timber up to that line, the court charged that the adoption of a boundary line by mistake had no element of license in it, and does not necessarily indicate intention on the part of either Packer to give, or of the Schraeder Company to receive, a license to cut and appropriate timber on Packer's lands.

We cannot discover any error in this part of the charge to the jury.

The Pennsylvania decisions cited by counsel in support of the assignments of error vary very much from the case at bar. Most of them are cases in which the boundary was agreed upon as a settlement of a dispute. In the others, the party setting up the estoppel had been misled as to a material fact by the false or mistaken representation of the party making

a claim inconsistent with such representation. In the case of *Perkins* v. *Gay*, 3 Serg. & R. 327, 331, the remarks of *Mr. Justice* Gibson, quoted by plaintiff in error, apply expressly and solely to "a settlement of a disputed right." In the next paragraph he says:

"If the parties, from misapprehension, adjust their fences and exercise acts of ownership in conformity with a line which turns out not to be the true boundary, or permission be ignorantly given to place a fence on the land of the party, this will not amount to an agreement or be binding as an assent of the parties; and I agree it is a principle of equity that the parties to an agreement must be acquainted with the extent of their rights and the nature of the information they can call for respecting them, else they will not be bound. The reason is, that they proceed under an idea that the fact which is the inducement to the agreement is in a particular way, and give their assent, not absolutely, but on conditions that are falsified by the event"—citing *Turner* v. *Turner*, 2 Ch. Rep. 154; *Bingham* v. *Bingham*, 1 Ves. Sr. 126; *Gee* v. *Spencer*, 1 Vern. 32; *Pusey* v. *Desbouvrie*, 3 P. Wms. 316.

The decisions in the other States generally support the rule that owners of adjacent tracts of land are not bound by consent to a boundary which has been defined under a mistaken apprehension that it is the true line, each claiming only the true line, wherever it may be found, and that in such case neither party is precluded or estopped from claiming his own rights under the true one, when it is discovered. Nor can such consent in an action of trespass *quare clausum fregit*, upon the theory of leave and license given, operate as an estoppel upon the claim of a plaintiff to recover damages to the extent of the value of the timber taken, any more than it can under the plea of *liberum tenementum* devest his title to land on which the alleged cutting and removal were committed.

[700]

There remain three other assignments of error not yet disposed of, which do not call for any extended notice: *First*, in relation to the refusal of the circuit court to remand this cause to the state court in which it originated. The reply to this is, the petition for removal into the circuit court was filed before the final hearing of the case, and therefore in time. *Hess* v. *Reynolds*, 113 U. S. 78 [28: 927]. *Second*, as to the alleged refusal of the court to allow the defendant to plead the Statute of Limitations. The record shows no such order. The 16th and 17th assignments of error, relating to the time to which plaintiff was entitled to claim damages, are fully covered by the charge of the court that the plaintiff, if entitled to recover at all, was entitled to recover damages for all cutting and carrying away of timber from the disputed premises up to the time he actually sold, etc.

The judgment of the Circuit Court is affirmed.

---

[512]

PETER L. KIMBERLY, *Appt.*,
v.
CHARLES D. ARMS ET AL.

(See S. C. Reporter's ed. 512-530.)

Findings of master in chancery—reference—review—reference of whole case—when partner cannot engage in separate business—mining partnership.

1. The findings of a master in chancery, upon a matter referred to him in a cause, are advisory to the court, which it may accept or disregard, according to its own judgment as to the weight of the evidence.

2. It is not within the general province of a master to pass upon all the issues in an equity case, and the court cannot refer to him the entire decision of a case without the consent of the parties.

3. But when the parties consent to a reference of a case to a master to hear and decide all the issues therein, and such reference is entered as a rule of the court, his findings cannot be disregarded at the mere discretion of the court, but are to be taken as presumptively correct—subject, however, to be reviewed under the reservation contained in the order of the court for manifest error.

4. A court of chancery, with consent of parties, may refer a whole case to a master.

5. One member of a partnership in a particular business cannot secretly engage on his own account in such business and keep his earnings to himself; a court of equity will subject such earnings to the benefit of the partnership.

6. In a mining partnership, however, a member may convey his interest to another person without dissolving the partnership, or may purchase interests in other mines for his own benefit without being required to account therefor to the partnership.

[No. 169.]

Argued Jan. 21, 22, 1889. Decided March 5, 1889.

APPEAL from a decree of the Circuit Court of the United States for the Northern District of Ohio, Eastern Division, dismissing a suit by one partner against the other for an accounting in regard to alleged partnership transactions. *Reversed.*

Statement by *Mr. Justice* **Field:** [513]

On the 27th of April, 1878, the complainant, Kimberly, and the defendant, Hannah M. Arms, executed the following articles of agreement:

"*Articles of Agreement*, Made and concluded this 27th day of April, A. D. 1878, by and between Hannah M. Arms, of Youngstown, Mahoning County and State of Ohio, party of the first part, and Peter L. Kimberly, of Sharon, Mercer County and State of Pennsylvania, of the other part, *Witnesseth*, That the said parties have agreed, and by these presents do agree, to associate themselves in the art, trade and business of leasing, prospecting, buying, mining, working and operating and dealing in lead, iron, silver, gold and other minerals, together with the lands on which the same may be located, and to do and perform all things belonging to said trade or business, which said copartnership shall commence on the 27th day of April, A. D. 1878, and continue until dissolved by either or both of said parties. And to that end and purpose said Hannah M. Arms has this day paid in as capital stock six thousand dollars, and the said Peter L. Kimberly has paid in as capital stock six thousand dollars, which said twelve thousand dollars shall be used, laid out and employed in common between them for their mutual advantage. It is also agreed that all gains, profits and increase as shall arise by reason of said joint business shall be divided equally, share and share alike, between said parties, and that all losses that shall happen to said joint business shall be shared and borne equally between said parties alike.

"That said business shall be carried on un-
[514] der the name and style of Arms & Kimberly, Charles D. Arms, Agent. That Charles D. Arms shall act as agent for said firm, and receive in compensation for his services the sum of twenty-five hundred dollars per annum, or at that rate, while in their employ. That said business shall be carried on in the Territories or States in the United States, or some of them.

"Witness our hands and seals the day and year aforesaid, at Youngstown, O.

"P. L. KIMBERLY. [Seal.]
"HANNAH M. ARMS. [Seal.]"

Hannah M. Arms was the wife of the defendant Charles D. Arms, and the instrument, though signed by her, was intended to express an agreement on his part, his name not being used because at the time he was financially embarrassed. She was always treated as a mere nominal party, and he was treated as the real party. On the 10th of May following Kimberly, having become embarrassed financially, assigned his interest in the partnership thus formed to Edwin M. Ohl. This assignment was made to prevent any interruption in the business of the partnership, Arms having already gone to Arizona in its prosecution. Kimberly took at the time from Ohl a declaration showing that the latter had no personal interest in the partnership, or in the properties that had been or might be acquired by it, but held the interest assigned to him as the trustee of Kimberly. In all subsequent proceedings Kimberly and Charles D. Arms considered and treated each other as the real and sole parties in the partnership, and as solely interested in the properties which it acquired.

Under this contract, and about the first of May following, Arms went to Arizona on the business of the firm, taking with him all its capital, viz., $12,000, to use in its business and to pay his expenses and salary. Whilst there he had his headquarters at Tucson, the capital of the Territory, where he became acquainted with two persons by the name of Witherell and Gage, who were largely interested in property known as the Grand Central Mine, which was reputed to be of great value, and was owned by
[515] the Grand Central Mining Company of Arizona, a corporation created under the laws of Missouri. From them Arms learned of the reputed value of the property, and very naturally became desirous of examining it, and, if found to be as valuable as reported, to acquire an interest in it. Accordingly, in November following, in company with Witherell and two other persons by the names of Whiteside and Austin, who were also interested in the mine, he went to see the property, traveling a distance of about two hundred miles, a portion of the way through the Apache territory, where they had an escort of soldiers. The expenses attending this visit were large and were borne by Arms and Kimberly. Arms examined the property and found good ore in it. He was informed by one of his companions, Whiteside, that he had in a crude way reduced four tons of ore and obtained $900 in silver. Soon afterwards Arms returned to Ohio, met Kimberly, and reported that he had expended all the moneys of the firm except three twenty dollar gold pieces. It does not appear that any further account of his expenditure of the moneys was ever rendered.

On the 24th of March, 1879, Arms and Kimberly, after consultation, concluded that it was advisable to increase the capital of their firm to $25,000, and accordingly did so, indorsing upon the original articles an agreement to that effect, signed H. M. Arms by C. D. Arms, and E. N. Ohl; and, pursuant to it, each party paid $6,500, Kimberly paying his share to Arms. With this increased capital Arms returned to Arizona, leaving about the first of April, and was there until some time in the following July. Other sums were advanced by Kimberly in the business of the firm as they were from time to time needed. Whilst in the Territory Arms again made a vist to the Grand Central Mine in company with a mining expert whom he had employed. The expenses of the trip and for the services of the expert were charged to the firm and paid. It is not necessary to state here the different steps taken by Arms which resulted in his acquiring an interest in the Grand Central Mine, by the purchase of a large number of shares of the company owning it with moneys borrowed of one N. K. Fairbank, of Chicago, for the facts respecting this trans- [516]
action are detailed in the findings of the master to whom the case was referred, which are hereafter given. The capital of the firm and other sums advanced by Kimberly were invested in various mining properties in Arizona and Colorado, the title of some of which was taken in his name and of some in the name of Ohl; but all claims arising out of them have been adjusted and settled between the partners.

The only remaining subject of controversy between them grows out of the interest which Arms acquired in the stock of the Grand Central Mining Company, Kimberly claiming that such interest belonged to the firm, and consequently that an undivided half thereof inured to him, and Arms claiming that the interest was acquired by him in his own right and belonged to him individually. The present suit is brought to determine this disputed matter, the complainant, Kimberly, asking for an adjudication in his favor and an accounting by Arms for the stock held by him in the Grand Central Mining Company, and for certain shares in the New York Grape Sugar Company, which he had acquired by a sale of some shares of the mining company. The bill contains all the averments necessary to present the claim of Kimberly, and the answer of Arms contains all the averments necessary to disclose his defense. The answers of the other defendants are not material upon the matters in controversy. Replications to the answers being filed, testimony was taken for some time, when, on the 16th of May, 1884, the parties consented that the case should be referred to a master "to hear the evidence and decide all the issues" between them, and, upon such agreement and at the request of the parties, the court on that day entered the following order:

"By consent and request of all the parties herein, it is ordered by the court that Hon. Richard D. Harrison be and is hereby appointed a special master herein to hear the evidence and decide all the issues between the parties and

make his report to this court, separately stating his findings of law and fact, together with all the evidence introduced before him, which evidence shall thereby become part of the report, [517] which report shall be subject to like exceptions as other reports of masters.

"It is further ordered by like consent and request that said master shall proceed upon twenty days' notice from either party to hear and determine said issues, and with full power and authority to grant such adjournments, amendments, exceptions, and motions as might be granted by the court if the trial was by the court."

Shortly after this order was made a hearing was commenced before the master, and two weeks were occupied in taking testimony and in the arguments of counsel. After holding the case under consideration until April 17, 1885, a period of eleven months, the master made his report, of which the following are the most important parts for the decision of the case, in addition to the facts stated above:

"The report of Richard A. Harrison, special master in chancery, to whom this cause stands referred for the purpose of hearing the evidence and determining all the issues between the parties, and making his report to said court, separately stating his findings of law and fact, together with all the evidence introduced before him, pursuant to an interlocutory decree, rendered at April Term, A. D. 1884.

"Having heard the evidence, in the presence of the parties and their counsel, and the arguments of counsel for the parties, in the City of Cleveland, my findings of fact, from such evidence, upon all the issues between the parties, are as follows:"

[The first six findings set forth substantially the facts as to the formation of the partnership between Arms and Kimberly, its object, the original capital put in, and its subsequent increase, the visit of Arms to Arizona on its business, and the purchase of mining properties there, which are narrated above.]

"7. In the years 1878 and 1879, prior to October, 1879, said Charles D. Arms, while acting as the agent of said partnership, and as a partner of said Kimberly, and while receiving a salary from said partnership, and at the expense of said partnership, visited the Tomb- [518] stone District of Arizona, and the mining claim then known as the 'Grand Central Mine,' which is in said district, and examined the same, and thus acquired a knowledge of the property.

"8. In the fall of 1879 the Grand Central Mining Company of Arizona, a Missouri corporation, having previously been organized with a capital stock of 800 shares of the par value of $500 per share, representing the said property known as the Grand Central Mine, E. B. Gage and W. F. Witherell, who were the holders of a large portion of said capital stock, proposed to sell a portion of the stock so held by them to said Charles D. Arms, whereupon Arms in October, 1879, came to Sharon, Pennsylvania, where said Kimberly resided, and there met said Kimberly; whereupon it was agreed between them that said Arms should go to Chicago and there arrange with N. K. Fairbank, if possible, to furnish the money to purchase stock in said Grand Central Mining Company of Arizona. Whereupon said Arms did go to Chicago, and did arrange with said Fairbank to furnish $87,500 for the purchase of said stock, and then returned to Youngstown, Ohio, and there again met said Kimberly and informed him of the arrangement he had made with said Fairbank; whereupon it was further agreed between said Arms and Kimberly that if, when Arms got back to Arizona and required the money to purchase said stock, said Fairbank should fail to furnish it, then said Kimberly, upon being notified of Fairbank's failure or refusal to furnish the money, would furnish at least $37,500 for that purpose.

"9. Immediately after making the arrangement last aforesaid, said Arms returned to Arizona, and there, on the 13th of November, 1879, obtained, in writing, from said Gage and Witherell, an option to purchase from them 225 shares of said stock at the price of $87,500 in four months from said date. Said Gage and Witherell also agreed to give said Arms forty additional shares of stock, in case he should finally elect to purchase said 225 shares under said option; and, as a part of said transaction, said Witherell also purchased of said Arms the interest of said Arms and Kimberly in certain mining properties known as the Mexican mine, at and for the price of $4,500. Afterwards, [519] and prior to March 4, 1880, said Arms elected to purchase said stock under said option; and, of said 225 shares,

He received	210	shares.
Also said (bonus)	40	"
He also purchased of Geo. P. Reed	51	"
And of E. B. Gage	23	"
Making in all acquired by said Arms	324	"

"10. For the purchase of 324 shares, and for assessments upon said stock to pay the expenses of developing said mine and for machinery said Fairbank advanced to said Arms various sums of money, from time to time; which sums, including interest thereon up to October 13, 1880, aggregated $162,498.08. On or about the 13th of October, 1880, said Arms and Fairbank made a settlement of the moneys so advanced by said Fairbank and of the stock so acquired by said Arms; and said Fairbank received and accepted from said Arms 184 shares of said 324 shares of stock, in full payment and satisfaction of the moneys so advanced by him; leaving said Arms the holder of 140 shares of said stock.

"11. Afterwards, to wit, on or about the——— day of———1881, the Grand Central Mining Company, an Ohio corporation, and a defendant in this suit, was formed and organized, with a capital stock of 100,000 shares of the par value of $100 per share; and said Arms converted said 140 shares of said Missouri corporation into 17,500 shares of said Ohio corporation.

"12. On the 4th of March, 1880, the partnership between said Arms and Kimberly was, by mutual consent, dissolved by them—Arms then claiming that said interest in said Grand Central Mining Company was his own individual property; which claim said Kimberly then disputed, and insisted that said interest belonged to said Arms and himself jointly, in equal proportions. On the 5th of March, 1880, said Ed-

win N. Ohl signed and delivered to said Arms an instrument of writing whereby he (said Ohl) agreed to convey, upon demand, the property [520] held by him for said firm to said Arms and Kimberly; and said Arms, at the same time, signed and delivered to said Ohl an instrument of writing, whereby he (said Arms) agreed to convey to said Kimberly, upon demand, all the undivided one half interest, or interests, which he (said Arms) had in mining lands and claims, or stocks in mining interests or claims, in the Territory of Arizona, except his interest in what was known as the Grand Central Mining Company; which said interest, it was provided in said instrument, should belong to the said Charles D. Arms absolutely.

"13. Said last mentioned instrument of writing was not shown to said Kimberly, and he had no knowledge of its provisions until on or about the — day of July, 1880, when, upon seeing and examining the same for the first time, and after consultation with legal counsel, he, said Kimberly, on the 22d of July, 1880, wrote, addressed, and mailed to said Arms, at Youngstown, Ohio, his postoffice address, a letter notifying him that he, said Kimberly, would not consent that said Arms should hold said interest in said Grand Central Mining Company as his own property, and insisting that said interest belonged to them jointly, and that he, Kimberly, would have his half of it if he was compelled to get it at the end of a lawsuit. The evidence does not prove that Arms actually received said letter; and I therefore do not find he received it. Said Kimberly did not know that said first mentioned instrument was executed until after July, 1880.

"14. On the — day of August, 1881, said Edwin N. Ohl reconveyed all of his interest in said business to said Peter L. Kimberly.

"15. On the second day of September, 1881, said Kimberly, by his attorney, requested of said Charles D. Arms, who was the President of said Grand Central Mining Company, permission to examine the records and books of said company, and also that said Arms should account with him, said Kimberly, for all the business that he, said Arms, had done since he and said Kimberly had gone into the mining business; all of which said Arms refused to do."

[The 16th and 17th findings show that out of the 17,500 shares of stock of the Grand Central [521] Mining Company, Arms sold to different parties, in 1881 and 1882, 4,800 shares, receiving therefor in cash $68,900, and from Jebb and Bond 625 shares of stock in the New York Grape Sugar Company, and during those years received cash dividends on his shares amounting to $81,775.]

"Upon the foregoing findings of fact my findings of law are as follows:

"1. That the 12,700 shares of stock in the Grand Central Mining Company standing in the name of said Charles D. Arms on the 14th of August, 1882, and said 625 shares of stock in the New York Grape Sugar Company, received by said Charles D. Arms from said William T. Jebb and H. G. Bond, belong to said copartnership of Arms & Kimberly, composed of said Charles D. Arms and Peter L. Kimberly; and that said Peter L. Kimberly is entitled to have one half of said 12,700 shares of stock and one half of said 625 shares of stock transferred to him.

"2. That the several sums of money received by said Charles D. Arms, from the sales made by him of stock in the Grand Central Mining Company, as well as the several sums of money received by him as dividends on stock held by him in said company, also belong to said copartnership of Arms & Kimberly, composed as aforesaid of said Charles D. Arms and Peter L. Kimberly; and that said Charles D. Arms is liable to said Peter L. Kimberly for one half of said several sums of money, together with interest on such one half, at the rate of 6 per cent per annum from the respective dates when said moneys were received by said Charles D. Arms."

Then follows a statement showing the amount due from Charles D. Arms to Peter L. Kimberly, on account of moneys thus received by Arms, and also a statement of the depositions offered to the master by the respective parties, which were returned with his report to the court. The report concludes as follows:

"The foregoing is all the evidence offered by either party. On the hearing, counsel for the respective parties agreed that all the evidence so offered, on either side, should be read, subject to the objections by either party, on the [522] ground of incompetency or irrelevancy, and the same was read accordingly.

"Respectfully submitted.

"R. A. Harrison, *Special Master.*"

Several exceptions were taken by the defendants to the report, amounting in substance to this, that the findings of fact were not supported by the evidence, and that the findings of law were not warranted by the law as applied to the evidence.

On the hearing the court treated the report as merely presenting the testimony in the case, holding that the findings of the master were not entitled to consideration as presumptively correct, so as to throw the burden of proof on the excepting parties. The language of the presiding justice on this head was as follows:

"A question is made as to the legal effect to be given to the findings of fact reported by the special master, it being claimed by counsel for complainant that the presumption in favor of their correctness throws upon the defendants excepting the burden of proof, which otherwise would have to be borne by the complainant. Undoubtedly, in equity causes, where a particular matter, properly referable to a master, has been reported on, the burden is upon the party excepting; but that rule is not applicable to the present case, where the whole cause has been referred, a practice not borrowed from the Code of Procedure of the State, and not sanctioned by the rules prescribed for the Courts of the United States sitting in equity. The cause comes before me, as in other cases, for final hearing upon the pleadings and proofs; and, while not conceding to the report of the special master the legal effect claimed for it, it has, nevertheless, in forming the conclusions reached in this decision, had accorded to it that weight which is due to the careful and well considered opinion of a lawyer chosen by the parties to act as

judge, with every qualification to justify the selection."

The court held that the purchase by the defendant, Charles D. Arms, of the shares in the [523] Grand Central Mining Company was made on his individual account, and not for the firm of Arms & Kimberly, and therefore that the equity of the case was with the defendants. It accordingly entered a decree sustaining the exceptions to the master's report, and setting aside the report and findings and dismissing the bill. The case is here on appeal from this decree.

Messrs. **Samuel Griffith** and **A. W. Jones**, for appellant:

The findings of the master in the cause were *prima facie* correct, and it was competent for the circuit court to enter an order for such reference.

Newcomb v. *Wood*, 97 U. S. 583 (24: 1086); *Heckers* v. *Fowler*, 69 U. S. 2 Wall. 128 (17: 760); *U. S.* v. *Farragut*, 89 U. S. 22 Wall. 406 (22: 879); *Jenkins* v. *Eldredge*, 3 Story, 299; *Medsker* v. *Bonebrake*, 108 U. S. 66 (27: 654).

Arms could not acquire any personal and individual interest in that mine which equity would not compel him to account for and surrender to the firm.

Story, chap. 9, § 169, p. 272; 3 Kent, Com. p. 61; *Struthers* v. *Pearce*, 51 N. Y. 357; *Mitchell* v. *Reed*, 61 N. Y. 123; *Terwilliger* v. *Brown*, 44 N. Y. 240.

A partner has no right to carry his knowledge, his skill, his capital or credit, his care or labor into another business.

Featherstonhaugh v. *Fenwick*, 17 Ves. Jr. 311.

All profits made by an agent in the course of the business of his principal will belong to the latter.

Story, Agency, § 183, p. 172, and § 210, p. 199; Brightly, Eq. § 97; *Leisenring* v. *Black*, 5 Watts, 304; *Myers' App.* 2 Pa. 463; *Moore* v. *Moore*, 5 N. Y. 256.

An agent cannot assume any position where his interest will be adverse to his employer.

1 Pars. Cont. 74, 75; *Prevost* v. *Gratz*, 1 Pet. C. C. 373; *Saeger* v. *Wilson*, 4 Watts & S. 504; *Campbell* v. *Pa. L. Ins. Co.* 2 Whart. 53, 64; *Norris' App.* 71 Pa. 106; *Coursin's App.* 79 Pa. 220; *Dutton* v. *Willner*, 52 N. Y. 312; Brightly, Eq. § 55, p. 69; *Walker* v. *Symonds*, 3 Swanst. 62.

Messrs. **Thos. W. Sanderson** and **Stevenson Burke**, for appellees:

The terms of the copartnership agreement did not require Arms to devote all of his time to the copartnership business, nor was he prevented from conducting the same or similar business on his own account.

Law v. *Cross*, 66 U. S. 1 Black, 533 (17: 185); *Wheeler* v. *Sage*, 68 U. S. 1 Wall. 528 (17: 648).

All agreements, in order to be executed, must be certain and definite; they must be equal and fair, and they must be clearly proved.

Griffith v. *Frederick Co. Bank*, 6 Gill & J. 424; *Seymour* v. *Delancy*, 3 Cow. 445; *Millard* v. *Ramsdell*, Harr. Ch. (Mich.) 373; *Colson* v. *Thompson*, 15 U. S. 2 Wheat. 336 (4: 253).

The agreement must be founded upon a valuable consideration.

3 Pom. Eq. § 1405; *Minturn* v. *Seymour*, 4 Johns. Ch. 497; *Butman* v. *Porter*, 100 Mass. 337; *Re Webb's Est.* 49 Cal. 541.

The absence of a plain and adequate remedy at law affords the only test of equity jurisdiction.

Watson v. *Sutherland*, 72 U. S. 5 Wall. 74 (18: 580); *Dade* v. *Irwin*, 43 U. S. 2 How. 883 (11: 308); *Parker* v. *Winnipiscogee Lake Cotton & Woolen Co.* 67 U. S. 2 Black, 545 (17: 333); *Bennett* v. *Butterworth*, 52 U. S. 11 How. 669 (13: 859); *Jones* v. *McMasters*, 61 U. S. 20 How. 9 (15: 805); *N. Y.* v. *Conn.* 4 U. S. 4 Dall. 5 (1: 716); *Hipp* v *Babin*, 60 U. S. 19 How. 278 (15: 635); *Wright* v. *Ellison*, 68 U. S. 1 Wall. 22 (17: 557).

Mr. Justice **Field** delivered the opinion of the court:

The first question to be considered on the appeal relates to the effect to be given to the findings of fact and of law contained in the report of the special master. The court below refused to treat them as presumptively correct, so as to impose upon the excepting parties the burden of showing error in them. It considered the case as presented on the pleadings and proofs, without reference to the report, to which there was accorded only the weight due to the careful and well considered opinion of a lawyer chosen by the parties to act as a judge, with qualifications to justify the selection. What that weight was, and in what appreciable way it could affect the judgment of the court, does not appear.

A master in chancery is an officer appointed by the court to assist it in various proceedings incidental to the progress of a cause before it, and is usually employed to take and state accounts, to take and report testimony, and to perform such duties as require computation of interest, the value of annuities, the amount of damages in particular cases, the auditing and ascertaining of liens upon property involved, and similar services. The information which he may communicate by his findings in such cases, upon the evidence presented to him, is merely advisory to the court, which it may accept and act upon or disregard in whole or in part, according to its own judgment as to the weight of the evidence. *Basey* v. *Gallagher*, 87 U. S. 20 Wall. 670, 680 [22: 452, 453]; *Quinby* v. *Conlan*, 104 U. S. 420, 424 [26: 800, 801]. [524] In practice it is not usual for the court to reject the report of a master, with his findings upon the matter referred to him, unless exceptions are taken to them and brought to its attention, and, upon examination, the findings are found unsupported or defective in some essential particular. *Medsker* v. *Bonebrake*, 108 U. S. 66 [27: 654]; *Tilghman* v. *Proctor*, 125 U. S. 136, 149 [31: 664, 669]; *Callaghan* v. *Myers*, 128 U. S. 617, 666 [*ante*, 547, 562]. It is not within the general province of a master to pass upon all the issues in an equity case, nor is it competent for the court to refer the entire decision of a case to him without the consent of the parties. It cannot, of its own motion, or upon the request of one party, abdicate its duty to determine by its own judgment the controversy presented, and devolve that duty upon any of its officers. But when the parties consent to the reference of a case to a master or other officer to hear and decide all the issues therein,

and report his findings, both of fact and of law, and such reference is entered as a rule of the court, the master is clothed with very different powers from those which he exercises upon ordinary references, without such consent; and his determinations are not subject to be set aside and disregarded at the mere discretion of the court. A reference, by consent of parties, of an entire case for the determination of all its issues, though not strictly a submission of the controversy to arbitration—a proceeding which is governed by special rules—is a submission of the controversy to a tribunal of the parties' own selection, to be governed in its conduct by the ordinary rules applicable to the administration of justice in tribunals established by law. Its findings, like those of an independent tribunal, are to be taken as presumptively correct, subject, indeed, to be reviewed under the reservation contained in the consent and order of the court, when there has been manifest error in the consideration given to the evidence, or in the application of the law, but not otherwise.

The reference of a whole case to a master, as here, has become in late years a matter of more common occurrence than formerly, though it has always been within the power of a court of chancery, with the consent of parties, to order [525] such a reference. *Haggett* v. *Welsh*, 1 Sim. 134; *Dowse* v. *Coxe*, 8 Bing. 20; *Prior* v. *Hembrow*, 8 Mees. & W. 773. The power is incident to all courts of superior jurisdiction. *Newcomb* v. *Wood*, 97 U. S. 581, 583 [24:1085, 1086]. By statute, in nearly every State, provision has been made for such references of controversies at law. And there is nothing in the nature of the proceeding, or in the organization of a court of equity, which should preclude a resort to it in controversies involving equitable considerations.

By the consent in the case at bar it was intended that the master should exercise power beyond that of a reporter of the testimony. If there had been such a limitation of his authority, there would have been no purpose in adding to his power "to hear the evidence" the power to "decide all the issues between the parties and make his report to the court, separately stating his findings of law and of fact" together with the evidence. To disregard the findings and treat the report as a mere presentation of the testimony is to defeat, as we conceive, the purpose of the reference and disregard the express stipulation of the parties. We are, therefore, constrained to hold that the learned court below failed to give to the findings of the master the weight to which they were entitled, and that they should have been treated as so far correct and binding as not to be disturbed, unless clearly in conflict with the weight of the evidence upon which they were made. That there was no such conflict is manifest. Upon nearly every important particular relating to the partnership between Arms and Kimberly, and its business, there is hardly any discrepancy in the testimony of the parties. It is only as to the circumstances under which Arms obtained his loan from Fairbank, with which he purchased the shares in the Grand Central Mining Company, that there is any serious dispute; and as that transaction is viewed—as the act of a partner or agent of the firm, or as the act of the individual without regard to such partnership—the conclusion is reached as to his liability to account for them. If the findings are taken as correct—there not being sufficient evidence to justify a disregard of them—there is an end to the controversy, for in accordance with them the firm had an interest in the shares purchased, and the complainant an equitable right [526] to his proportion upon its dissolution.

But independently of the findings, the facts, which are undisputed or sustained by a great preponderance of evidence, must, we think, lead to the same conclusion. As already stated, Arms made two visits to Arizona on the business of the partnership, which consisted principally in the purchase and sale of mining properties, and whilst there on both occasions he visited and examined the Grand Central Mine, taking long trips for that purpose, accompanied on one of them by an experienced expert, and thus ascertained the great value of the property. The expenses incurred for himself on both trips and for the expert were charged to and paid by the firm. On one of these visits he met Gage and Witherell, who held certain shares in the company owning that mine, which they desired to sell. Upon his return north in October, 1879, he informed Kimberly of the shares thus held, and advised their purchase. How the necessary means for that purpose could be raised was then discussed between them, Kimberly expressing a willingness to act upon the judgment of Arms and furnish his portion of the money. Arms mentioned that he had a friend in Chicago by the name of Fairbank, a man of great wealth, whom he thought he could interest in the purchase and induce to advance the money. After this consultation Arms went to Chicago and there succeeded in making an arrangement with Fairbank, by which the latter was to furnish the money to purchase the shares held by Gage and Witherell. The arrangement provided that from the moneys first received from the sale or operation of the mine Fairbank should be reimbursed his advances, and that the sum or interest remaining should be equally divided; but in case the investment proved a failure, he should be paid one half of his advances. Arms then returned to Youngstown, in Ohio, and, October 18, telegraphed Kimberly who was at Sharon, in Pennsylvania, inquiring where he could meet him. Kimberly replied that he would leave for Youngstown that afternoon, and did so, joining Arms at that place. Gage had previously been there, and Kimberly, on his arrival, immediately inquired for him, evidently desirous of seeing him re- [527] specting the proposed purchase of shares held by him and Witherell; for it is not suggested that Gage had any other business than the sale of the shares, with either member of the firm. Arms told Kimberly that Gage had left that morning or that day, and then informed him of the arrangement with Fairbank, including the agreement to refund one half the advances in case the investment proved a failure. To this arrangement Kimberly assented. Arms further said that there might be some misunderstanding with Fairbank, and he wished to know if, in that event, Kimberly would raise the necessary funds to make the purchase, mentioning from forty to fifty thousand dollars. Kimberly assured him that he would if Arms

thought it advisable, that is, that the property was worth the money. Soon afterwards Arms went to Arizona and purchased from Gage and Witherell 225 shares in the Grand Central Mining Company. They also gave him a bonus of forty additional shares, which they had agreed to do in case the purchase was made. Arms also effected a purchase of seventy-four shares from other parties. All these purchases were made whilst the partnership between Arms and Kimberly continued as originally formed, changed only by the increase in its capital. The partnership was not dissolved until March 4, 1880. Under these circumstances, the purchase must be deemed to have been made in the interest of the partnership. One member of a partnership in a particular business cannot secretly engage on his own account in such business and keep his earnings to himself. Such conduct would inevitably lead to gross abuses, tempting one partner to apply to his own use profitable adventures and to turn over to the firm those which were failures. The law exacts good faith and fair dealing between partners, to the exclusion of all arrangements which could possibly affect injuriously the profits of the concern. Arms was not merely a partner of Kimberly; he was the agent of the firm for the transaction of its business, and as such was allowed a salary beyond the interest coming to him as partner. He therefore stood in his relation to Kimberly clothed in some respects with a double trust, both of which imposed upon him the utmost good faith in his [528] dealings, so that he might never sink the interest of the firm into that of himself alone. Whatever he may have obtained in disregard of such trust a court of equity will lay hold of and subject to the benefit of the partnership. Neither by open fraud nor concealed deception, nor by any contrivance masking his actual relations to the firm, can a member of it, or an agent of it, be permitted to hold to his own use acquisitions made in disregard of those relations, either as partner or agent. In this statement of their duties we are repeating doctrines of common knowledge, which will be found fully set forth and illustrated in approved treatises on partnerships and agency and in the adjudications of the courts. Thus, in *Mitchell* v. *Reed*, 61 N. Y. 123, to cite one instance, the Court of Appeals of New York held that one member of a partnership could not during its existence, without the knowledge of his copartners, take a renewal of a lease for his own benefit of premises leased by the firm, upon which it had made valuable improvements and enhanced their rental value, although the term of the renewed lease did not begin until the termination of the partnership. And in giving its decision, the court said: "The relation of partners with each other is one of trust and confidence. Each is general agent of the firm and is bound to act in entire good faith to the other. The functions, rights and duties of partners in a great measure comprehend those both of trustees and agents; and the general rules of law applicable to such characters are applicable to them. Neither partner can, in the business and affairs of the firm, clandestinely stipulate for a private advantage to himself. He can neither sell nor buy from the firm at a concealed profit for himself. Every advantage which he can obtain in the business of the firm must inure to the benefit of the firm. These principles are elementary." See Story, Partn. §§ 174-178; Story, Agency, § 211.

We do not attach any weight, as against the conclusions reached, to the fact that on the 5th of March, 1880, the day following the dissolution of the partnership, in an instrument executed by Arms, agreeing to convey to Kimberly, on demand, the undivided one half interest which he, Arms, had in mining lands or claims, or stocks in mining interests, or claims [529] in the Territory of Arizona, purchased or located by him prior to January 1, 1880, he excepted the interest claimed by him in the Grand Central Mining Company, stating that said interest should belong to him absolutely. That instrument was delivered by Arms to Ohl, who kept it in his possession until some time in the following July. It was not shown to Kimberly, nor had he had any knowledge of it until then. So soon as he saw it, after consultation with counsel, he wrote and mailed to Arms a letter under date of July 22, 1880, notifying him that he would not consent to his holding the interest in the Grand Central Mining Company as his own property, and stating that the said interest belonged to them jointly, and that he Kimberly, would have half of it if he was compelled to obtain it by legal proceedings. Though it is not shown that Arms received the letter, yet, as it was mailed to his postoffice address in Youngstown, Ohio, the presumption is that he did receive it. At any rate, Kimberly never in any way assented to the correctness of the statement in the instrument as to Arms' alleged sole interest in the Grand Central Mining Company, but on the contrary repudiated it so soon as it was brought to his knowledge.

The fact that the transaction with Fairbank and the purchase of the shares were made in the name of Arms alone, does not affect the question. All the purchases for Arms and Kimberly were made in his name alone or in that of Ohl. Not one was made in the firm name of Arms & Kimberly. Nor does it make any difference that no money was advanced by Kimberly for the purchase. None was advanced by Arms; the money was raised by a loan which Arms negotiated upon conditions that proved profitable to the lender as well as to himself, and of course to his partner.

The case of *Bissell* v. *Foss*, 114 U. S. 252 [29: 126], does not seem to us to have any bearing on the subject under consideration. There the question was whether a member of a mining partnership, that is, a partnership formed for the development and working of a mine, could acquire the shares of an associate without the knowledge of the other associates and hold them on his own account; and the court held that it was lawful for him to do so. Mining partner [530] ships or associations, whilst governed by many rules relating to ordinary partnerships, have some rules peculiar to themselves. One of such rules is that a member may convey his interest or shares to another person without dissolving the partnership, and thus bring into it a new member without the consent of his associates; and may purchase interests in the same or in other mines for his own benefit without being

required to account to the partnership for the property. *Kahn* v. *Smelting Co.* 102 U. S. 641 [26:266].

The partnership between Arms and Kimberly was not a mining partnership, in the proper sense of that term. It was not a partnership for developing and working mines, but for the purchase and sale of minerals and mining lands, and in that respect was subject to the rules governing ordinary trading or commercial partnerships. It can no more be called a mining partnership than a partnership for the purchase of the products of a farm and the lands upon which those products are raised, can be called a partnership to farm the lands.

It follows from the views expressed that the decree of the Court below must be reversed and the cause remanded with directions to confirm the report of the special Master, and to take further proceedings not inconsistent with this opinion; and it is so ordered.

---

[506] ROBERT McKENNA ET AL., *Plffs. in Err.*,
v.
J. LAWRENCE SIMPSON, as Assignee in Bankruptcy, ET AL.

(See S. C. Reporter's ed. 506-512.)

Suit by assignee in bankruptcy to set aside fraudulent conveyances—may be brought in state court—review of state judgment—jurisdiction of this court—federal question.

1. An assignee in bankruptcy, appointed under the Bankrupt Law, might bring suit in the District Court of the United States to set aside a conveyance made by the bankrupt to defraud his creditors; where he did so, this court would have jurisdiction to review the decree of the district court.

2. But the assignee in bankruptcy was not precluded from proceeding in the state court to set aside such alleged fraudulent conveyances.

3. When the assignee resorted to the state court, and no question was there raised as to his power under the Acts of Congress, or the rights vested in him as assignee, the proceedings were governed, and the judgment of the court upon the validity of the conveyances was subject to review, in the same manner and to the same extent as proceedings of a similar character by a creditor to set aside conveyances in fraud of his rights by a debtor.

4. Where such proceedings were taken in the state court and no decision was made therein against the validity of any statute of, or authority exercised under, the United States or any immunity claimed under the Constitution of the United States, this court has no jurisdiction to review the state decision.

5. The decision of the state court as to what should be deemed a fraudulent conveyance does not present any federal question, nor does the application by the court of the evidence in reaching that decision raise one.

[No. 767].

Submitted Jan. 4, 1889. Decided March 5, 1889.

IN ERROR to the Supreme Court of the State of Tennessee, to review a decree affirming the decree of the Chancery Court of Shelby County, in favor of complainant, adjudging that the title to lands was in him as assignee in bankruptcy and that he recover the land and possession thereof.

On motion to dismiss, on the ground that this court has no jurisdiction. *Dismissed.*

The facts are stated in the opinion.

Mr. **Wm. M. Randolph,** for plaintiffs in error:

The right of recovery of the assignee in bankruptcy depends entirely upon the provisions of the Act of Congress establishing the system of bankruptcy.

Glenny v. *Langdon*, 98 U. S. 29 (25:46); *Trimble* v. *Woodhead*, 102 U. S. 647 (26:290); *Moyer* v. *Dewey*, 103 U. S. 301 (26:394).

A state court has jurisdiction of an action by an assignee in bankruptcy to recover a debt due the bankrupt.

Kidder v. *Horrobin*, 72 N. Y. 159.

A state court has jurisdiction of an action by an assignee in bankruptcy to recover property conveyed by the bankrupt in fraud of his creditors.

Barton v. *Geiler*, 108 U. S. 161 (27:687); *Olcott* v. *Maclean*, 73 N. Y. 223.

This court has jurisdiction over the state judgment by writ of error.

O'Brien v. *Weld*, 92 U. S. 81 (23:675); *Sharpe* v. *Doyle*, 102 U. S. 686 (26:277); *Factors & T. Ins. Co.* v. *Murphy*, 111 U. S. 738 (28:582); *Hill* v. *Harding*, 107 U. S. 631 (27:493); *Palmer* v. *Hussey*, 119 U. S. 96 (30:362); *Winchester* v. *Heiskell*, 119 U. S. 450 (30:462); *Jenkins* v. *International Bank*, 127 U. S. 484 (*ante*, 189); *Mace* v. *Wells*, 48 U. S. 7 How. 272 (12:698); *Peck* v. *Jenness*, 48 U. S. 7 How. 612 (12:841); *Bush* v. *Person*, 59 U. S. 18 How. 82 (15:273).

The assignee takes only such rights as the bankrupt had at the date of his bankruptcy, and is estopped to assert any claim of title where the bankrupt himself would be estopped to assert such claim.

Donaldson v. *Farwell*, 93 U. S. 634 (23:995); *Dudley* v. *Easton*, 104 U. S. 99 (26:668); *Yeatman* v. *N. O. Sav. Inst.* 95 U. S. 766 (24:590); *Porter* v. *Lazear*, 109 U. S. 86 (27:865); *Warren* v. *Moody*, 122 U. S. 136 (30:1109).

The evidence should be confined strictly to the allegations of the facts.

Stearns v. *Page*, 48 U. S. 7 How. 819, 829 (12:928, 932); *Moore* v. *Greene*, 60 U. S. 19 How. 69 (15:533); *Beaubien* v. *Beaubien*, 64 U. S. 23 How. 190, 208 (16:484, 488); *Noonan* v. *Lee*, 67 U. S. 2 Black, 508 (17:281).

A party is not allowed to state one case by his bill or answer and make out a different one on proof.

Patton v. *Taylor*, 48 U. S. 7 How. 159 (12:649); *Voorhees* v. *Bonesteel*, 83 U. S. 16 Wall. 29 (21:270); *Johnson* v. *Luckado*, 12 Heisk, 270; *Furman* v. *North*, 4 Baxt. 296.

A debt barred by the Statute of Limitations is not provable in bankruptcy.

Re Ray, 2 Ben. 57-8; *Re Cornwall*, 9 Blatchf. 114; *Re Kingsley*, 1 Lowell, 216.

A judgment barred by the Statute of Limitations cannot be the basis of a creditor's bill for setting aside a fraudulent conveyance.

Wait, Fraud. Conv. §§ 77, 79; *Edwards* v. *McGee*, 31 Miss. 143; *Fox* v. *Wallace*, 31 Miss. 660.

The Supreme Court of Tennessee erred in making its decision, and in overruling the exceptions.

Smith v. *Greer*, 3 Humph. 118, 121-123; *Burkey* v. *Self*, 4 Sneed, 121, 123-124; *Nicholas* v. *Ward*, 1 Head, 323; *Ricketts* v. *McCully*, 7 Heisk. 712; *White* v. *Bettis*, 9 Heisk. 647; *Perkins* v. *Perkins*, 1 Tenn. Ch. 537, 543-547.

The declarations of a grantor, after he has conveyed the property and has parted with his dominion over it, are not admissible in evidence against his grantee.

Trotter v. *Watson*, 6 Humph. 509; *Neal* v. *Peden*, 1 Head, 546; *Vance* v. *Smith*, 2 Heisk. 343, 353.

Marriage is a valuable consideration.

Prewit v. *Wilson*, 103 U. S. 22 (26:360); *Peck* v. *Carmichael*, 9 Yerg. 325; *Mills* v. *Haines*, 3 Head, 332.

The settlement was a proper one, and made for a valuable consideration, and no creditor was defrauded.

Tiffany & Bullard, Trusts & Trustees, 3; Perry, Trusts, §§ 66, 359; *Neves* v. *Scott*, 50 U. S. 9 How. 196 (13:102); 54 U. S. 13 How. 268 (14:140); *Nichols* v. *Eaton*, 91 U. S. 716 (23:254).

A suit may be brought to enforce the trust verbally agreed upon, making proof of the fact of the agreement.

McCammon v. *Pettitt*, 3 Sneed, 242; *McLellan* v. *McLean*, 2 Head, 685; *Nichols* v. *Cabe*, 3 Head, 92; *Butler* v. *Rutledge*, 2 Coldw. 4.

Deeds of conveyance as between the parties operate whether they are registered or not.

Hays v. *McGuire*, 8 Yerg. 92; *Owen* v. *Owen*, 5 Humph. 352; *Green* v. *Goodall*, 1 Coldw. 404, 412; *Stewart* v. *Platt*, 101 U. S. 731 (25:816).

A fraudulent conveyance of property is good except as to the creditors of the grantor.

Battle v. *Street*, 85 Tenn. (1 Pickle) 282; *Williams* v. *Lowe*, 4 Humph. 62; *Hubbs* v. *Brockwell*, 3 Sneed, 574; 1 Story, Eq. Jur. § 371.

If Robert McKenna had had control of the property, and had received the rents and profits of it, such facts would not have constituted a fraud against his creditors, nor have subjected the property or its proceeds or income to their demands or claims.

Aldridge v. *Muirhead*, 101 U. S. 397 (25: 1018); *Hamilton* v. *Bishop*, 8 Yerg. 33; *Baldwin* v. *Baldwin*, 2 Humph. 473; *Adams* v. *Collier*, 122 U. S. 382 (30:1207); *Adams* v. *Adams*, 88 U. S. 21 Wall. 185 (22:504).

No formal delivery of a deed is necessary.

Farrar v. *Bridges*, 5 Humph. 411.

Delivery of a deed may be inferred from circumstances.

Thompson v. *Jones*, 1 Head, 574; *Corley* v. *Corley*, 2 Coldw. 520; *McEwen* v. *Troost*, 1 Sneed, 186; *Saunders* v. *Harris*, 1 Head, 185; *Nichol* v. *Davidson Co.* 3 Tenn. Ch. 547.

No order of removal in the state court was necessary, but the cause was removed by the mere fact of filing the petition and giving the bond, and the accepting the petition and the approving of the bond by the state court.

Fisk v. *Union Pac. R. Co.* 6 Blatchf. 362; *Hatch* v. *Chicago, R. I. & P. R. Co.* 6 Blatchf. 105; *Osgood* v. *Chicago, D. & V. R. Co.* 6 Biss. 330; *Connor* v. *Scott*, 4 Dill. 242; *Burlington, C. R. & N. R. Co.* v. *Dunn*, 122 U. S. 516, 517 (30:1160).

In order to prevent the operation of the Statute of Limitations because of the fraudulent concealment of the cause of action, the bill must set out specifically the fact of concealment, and the manner in which it was effected; and the allegations must be established by the proof.

Moore v. *Green*, 60 U. S. 19 How. 69 (15:533); *Bailey* v. *Glover*, 88 U. S. 21 Wall. 342 (22:636); *Wood* v. *Carpenter*, 101 U. S. 135 (25:807); *Mercantile Nat. Bank* v. *Carpenter*, 101 U. S. 567 (25:815); Wood, Limitations, § 275; *Reeves* v. *Dougherty*, 7 Yerg. 222.

The deed of Robert McKenna to Rose, with the covenants of seisin in fee, good right to convey, and general warranty of title, operated afterwards, when Robert McKenna bought the land under the consent decree, to vest such title as he acquired by that purchase by way of estoppel upon him, in Mrs. Kirkup, the vendee of Rose, and in the vendees of Mrs. Kirkup; and such estoppel is equally effectual against his assignee in bankruptcy.

Henderson v. *Overton*, 2 Yerg. 398; *Susong* v. *Williams*, 1 Heisk. 630; *Ruffin* v. *Johnson*, 5 Heisk. 609; *Kerbough* v. *Vance*, 6 Baxt. 113; *Bush* v. *Person*, 59 U. S. 18 How. 82 (15:273).

Messrs. **C. W. Metcalf** and **S. P. Walker**, for defendants in error:

The assignee alone is authorized to file a bill to set aside fraudulent conveyances of property, made by the bankrupt.

Glenny v. *Langdon*, 98 U. S. 20 (25:43); *Trimble* v. *Woodhead*, 102 U. S. 647 (26:290); *Moyer* v. *Dewey*, 103 U. S. 301 (26:394).

Such suit may be brought by the assignee in the state court.

Goodrich v. *Wilson*, 119 Mass. 429; *Clark* v. *Ewing*, 3 Fed. Rep. 83; *Barton* v. *Geiler*, 3 Lea, 296; *Same* v. *Same*, 108 U. S. 161 (27:687); *Olcott* v. *Maclean*, 73 N. Y. 223.

In the case at bar the decision of the state court was not against the title of the assignee.

Barton v. *Geiler*, 108 U. S. 161 (27:687); *Factor's & T. Ins. Co.* v. *Murphy*, 111 U. S. 739 (28: 583); *Peck* v. *Jenness*, 48 U. S. 7 How. 618 (12: 843); *O'Brien* v. *Weld*, 92 U. S. 81 (23:675); *Jenkins* v. *International Bank*, 127 U. S. 484 (*ante*, 189).

False recitals are the strongest evidence of fraud.

Gibbs v. *Thompson*, 7 Humph. 179; *McCrady* v. *Hasslock*, 4 Baxt. 1.

The vital question is, always, the good faith of the transaction.

Lloyd v. *Fulton*, 91 U. S. 479–485 (23:363, 365); *Jones* v. *Clifton*, 101 U. S. 225 (25:908).

What evidence will make out a case of delivery has been several times considered by this court.

Youngs v. *Guilbeau*, 70 U. S. 3 Wall. 636 (18: 262); *Parmelee* v. *Simpson*, 72 U. S. 5 Wall. 81 (18:542); *Gould* v. *Day*, 94 U. S. 405 (24:282); *Calhoun Co.* v. *Am. Emigrant Co.* 93 U. S. 125 (23:826); *U. S.* v. *Le Baron*, 60 U. S. 19 How. 73 (15:525); *Conner* v. *Long*, 104 U. S. 230 (26: 724).

Mr. Justice **Field** delivered the opinion of the court: [507]

This was a suit by an assignee in bankruptcy to set aside certain conveyances of the bankrupt, and of others under his direction, upon the ground that they were made to defraud his creditors. It was commenced in one of the Courts of Tennessee. The facts upon which it is founded, briefly stated, are as follows: In August, 1878, Robert McKenna, a resident of that State, one of the defendants below, filed his petition in bankruptcy in the District Court for the Western District of Tennessee, and was,

in November, 1878, adjudged a bankrupt. In December following, Oscar Woodbridge was appointed his assignee, and a deed of assignment was made to him of the property and effects of the bankrupt.

In May 1880, the assignee filed a bill in the Chancery Court of Shelby County, Tennessee, against the bankrupt and his infant daughter, Maud McKenna, to set aside, as fraudulent and void, certain conveyances of about two hundred acres of land in that county; one executed by the bankrupt, Robert McKenna, dated February 15, 1878, to Solomon Rose, for the alleged consideration of $8,000; one executed by Rose on the same day for the like consideration to Mrs. John Kirkup, of Kentucky, a sister of McKenna; and one executed by Mrs. Kirkup, August 1, 1876, to Mrs. Anna McKenna, wife of the bankrupt, and her three children, for the alleged consideration of $5,000. Of these grantees, Maud McKenna was the only one surviving when the bill was filed. Metcalf and Walker were also made defendants because they claimed a lien upon the premises, which had been adjudged in their favor in another suit. Woodbridge, the assignee, having died, the suit was revived in the name of J. Lawrence Simpson, who had been appointed assignee in place of the deceased. Afterwards [508] the defendant Robert McKenna filed an answer to the complaint, denying that the conveyances were fraudulent and void, and alleging that the object of them was to effect a settlement of the land upon his wife and children, and that his financial condition at the time was such as to render it legal and proper for him to do so, as he had no debts. Robert McKenna having been appointed guardian of Maud McKenna, an answer was filed by him, as such guardian, for her, in which substantially the same matters of defense were set up. The defendants Metcalf and Walker filed an answer and also a cross bill, asserting their lien on the premises. Proofs were then taken, from which it appeared that no money consideration ever passed between the parties to the several conveyances mentioned; that Solomon Rose, grantor to Mrs. Kirkup, never saw her, and did not remember anything about the transaction, except that McKenna came to his office and asked him to go to the court house and make the conveyance; and that the deed of Mrs. Kirkup, dated August 1, 1876, was acknowledged July 18, 1878, one month before McKenna's bankruptcy, and was not registered until January 15, 1879, six months afterwards. The court held that the conveyances were voluntary and fraudulent, and made to hinder, delay and defraud the creditors of the bankrupt, McKenna; and further, that the conveyances were inoperative to create an estate in the wife and children of McKenna as against the assignee in bankruptcy, the same not having been filed for registration until after the adjudication of the bankruptcy of McKenna. It was also held that the defendants Metcalf and Walker were entitled to the lien asserted by them. A decree was accordingly entered in favor of the complainant, adjudging that the title to the land was in him as assignee, and that neither the defendant Robert McKenna nor Maud McKenna had any title thereto, and ordering that the complainant recover the land and possession thereof; and also in favor of the defendants, Metcalf and Walker, for their lien on the land. On appeal to the supreme court of the State a decree was entered there, in substance, and almost in identical language, in effect affirming the decree appealed from. To review this latter decree the case is brought here on writ of error by [509] Robert and Maud McKenna. The defendants in error now move to dismiss the writ on the ground that this court has no jurisdiction to review that decree.

Section 709 of the Revised Statutes points out the cases in which the judgment or decree of the highest court of a State, in which a decision could be had, may be reviewed by the Supreme Court of the United States. It provides for such review in three classes of cases: *first*, where is drawn in question the validity of a treaty or statute of, or an authority exercised under, the United States, and the decision is against its validity; *second*, where is drawn in question the validity of a statute of, or an authority exercised under, any State, on the ground of its being repugnant to the Constitution, Treaties, or Laws of the United States, and the decision is in favor of its validity; *third*, where any title, right, privilege, or immunity is claimed under the Constitution, or any treaty or statute of, or commission held or authority exercised under, the United States, and the decision is against the title, right, privilege, or immunity specially set up or claimed by either party under such Constitution, Treaty, Statute, commission, or authority.

In neither of the clauses mentioned is there any provision which covers the present case. It is true, by section 4972 of the Revised Statutes the jurisdiction of the District Courts of the United States, as courts of bankruptcy, extends to all cases and controversies arising between the bankrupt and any creditor or credit- [511] ors who may claim any debt or demand under the bankruptcy, and to the collection of the assets of the bankrupt, and, indeed, to all acts, matters, or things to be done under and in virtue of the bankruptcy, until the final distribution and settlement of his estate, and the close of the proceedings in bankruptcy. Under these provisions the assignee might undoubtedly have brought suit to set aside the conveyances in question in the District Court of the United States for the district. Had he done so, this court would have had jurisdiction to review its decree; but he was not precluded from proceeding in the state court to set aside the alleged fraudulent conveyances. And when he resorted to that court, and no question was raised as to his power under the Acts of Congress, or the rights vested in him as assignee, the proceedings were governed, and the judgment of the court upon the validity of the conveyances was subject to review, in the same manner and to the same extent as proceedings of a similar character by a creditor to set aside conveyances in fraud of his rights by a debtor. *Glenny* v. *Langdon*, 98 U. S. 20 [25: 43], and *Trimble* v. *Woodhead*, 102 U. S. 647 [26: 290], were cases commenced in the Circuit Court of the United States; and *Barton* v. *Geiler*, 108 U. S. 161 [27: 687], was commenced in a state court. See also *Clark* v. *Ewing*, 9 Biss. 440; *Olcott* v. *Maclean*, 78 N. Y. 223; and *Goodrich* v. *Wilson*, 119 Mass. 429. In the proceedings

in the state court no decision was made against the validity of any statute of, or authority exercised under, the United States, or against any title, right, privilege, or immunity claimed under the Constitution of the United States or any statute thereof. No question, indeed, arose under the action of the state court which could bring its decision within the provisions of section 709 of the Revised Statutes.

The several cases to which our attention is called, as being in supposed conflict with this view, have no bearing upon the questions involved. In *O'Brien* v. *Weld*, 92 U. S. 81 [23: 675], the question arose whether under the Bankrupt Act the District Court of the United States had authority to make the order involved, and the decision of the highest state court was against the authority; and that was
512] held sufficient to sustain the federal jurisdiction. In *Factors Ins. Co.* v. *Murphy*, 111 U. S. 738 [28: 582], the effect to be given to a sale of property under an order of the district court in bankruptcy was in question, the authority of the court to direct a sale free from incumbrances being denied. *Jenkins* v. *International Bank of Chicago*, 127 U. S. 484 [*ante*, 189], involved a question as to the authority of the assignee in bankruptcy to institute a suit touching any property or rights of property vested in him after the expiration of two years from the time when the cause of action accrued.

The decision of the state court as to what should be deemed a fraudulent conveyance does not present any federal question, nor does the application by the court of the evidence in reaching that decision raise one.

We are of opinion, therefore, that this court has no jurisdiction to review the judgment of the Supreme Court of Tennessee.

The writ of error must consequently be dismissed; and it is so ordered.

479] G. W. NORTON, *Plff. in Err.*,
v.
THE BOARD OF COMMISSIONERS OF THE TAXING DISTRICT OF THE CITY OF BROWNSVILLE.

(See S. C. Reporter's ed. 479-493.)

Tennessee Constitution—prohibition therein—previous law—Act of February 8, 1870—municipal bonds, when void.

1. The inhibition imposed by section 29 of the Tennessee Constitution of 1870—that the credit of a county, city or town shall not be given or loaned to or in aid of any person, company, association or corporation, and that a county, city or town shall not become a stockholder in a corporation, except upon an election to be first held by the qualified voters of such county, city or town, and the assent of three fourths of the votes cast at said election—operates directly upon the municipalities themselves, and is absolute and self executing; and such county, city or town is destitute of power to give or loan its credit, or to become stockholders, until legislation authorizing the election and action thereupon is had.

2. The prohibition of the loan or credit or the subscription to stocks, without a three-fourths vote, is not an affirmative grant of authority to give or loan credit or to become a stockholder upon a three-fourths vote; further legislation is necessary before the municipality can act.

3. Provision in a new Constitution, providing for keeping in force all laws not inconsistent therewith, does not perpetuate any previous law enabling a municipality to do that which is forbidden by such Constitution.

4. The Tennessee Act of February 8, 1870, conferring upon the Town of Brownsville the authority to issue corporation bonds in aid of railroads, cannot be availed of under the provisions of the Constitution of Tennessee which was adopted March 26, 1870, and went into effect on the 5th day of May in that year.

5. The proceedings, resulting in the issue of the bonds whose validity is under consideration in this case, having been initiated May 11, 1870, five days after the Constitution went into effect, and the election held on the 11th day of June following, there was no authority to hold the election and to issue the bonds, and their holders cannot recover.

[No. 1442.]

Submitted Jan. 4, 1889. Decided March 5, 1889.

IN ERROR to the Circuit Court of the United States for the Western District of Tennessee, to review a judgment for defendant, in a suit upon municipal bonds. *Affirmed.*

See *S. C.* below, 36 Fed. Rep. 99.

Statement by *Mr. Chief Justice* **Fuller:**

Plaintiff in error brought suit in the Circuit Court of the United States for the Western District of Tennessee against the Board of Commissioners of the Taxing District of the City of Brownsville, Tennessee, and the president, treasurer, secretary and financial agent of that board, upon certain interest coupons annexed to bonds issued by the City of Brownsville, July 1, 1870. The cause was tried upon an agreed statement of facts, as follows:

The City of Brownsville was incorporated by Act of the General Assembly of Tennessee passed on February 24, 1870.

The records of the board of mayor and aldermen show the following proceedings had May 12, 1870:

"BROWNSVILLE, TENNESSEE, May 12, 1870.

"A call-meeting of the board of mayor and aldermen met at the mayor's office. Members being all present, the board was called to order. [480] Reading the minutes of the last meeting was dispensed with. Upon application of J. D. Smith, President of Brownsville and Ohio Railroad Company, and in pursuance of authority in us vested by the Act of General Assembly of State of Tennessee passed February 8, A. D. 1870, the board of mayor and aldermen of the City of Brownsville hereby order and direct that an election be held in our said City, on Saturday, the 11th day of June next, at which election the qualified voters of our said city will vote upon the proposition to issue the bonds of the corporation to be subscribed as stock in aid of the Brownsville and Ohio Railroad, and in accordance with the provisions of said Act, said bonds to have twenty years to run, and be payable in City of St. Louis, Missouri, and bear interest at the rate of eight per cent per annum, said interest payable annually in said city, and said bonds to be issued to amount to the sum of fifty thousand dollars, and be known as Brownsville railroad bonds. Said election is to be advertised in The Brownsville Bee, the county newspaper of Haywood County, for twenty days before said election. Said bonds are to be issued to and taken by the Brownsville and Ohio Railroad Company in lieu of the sum of fifty thousand dollars heretofore voted and subscribed by this corporation to the said company in pursuance of

section 6 of said Act of General Assembly of State of Tennessee of February 8, 1870. In voting at said election those voters who are in favor of the issuance of said bonds in lieu of said subscription shall have written or printed upon their ballots 'bonds,' and those who are opposed to the issuance of said bonds shall have written or printed on their ballots 'no bonds.' It is ordered that the Sheriff of Haywood County give notice, by advertisement in The Brownsville Bee for twenty days, of the time, place and purpose of holding said election, and shall open and hold the same at the usual voting place or places in the City of Brownsville on Saturday, June 11, 1870, and shall, as soon thereafter as practicable, certify the result of said election to this board. Full power and authority is hereby given him to appoint judges and other officers of said election, and to do all things else necessary and proper to carry into effect this order."

[481] On the 13th day of June, 1870, the Sheriff of Haywood County, Tennessee, certified to the Mayor and Aldermen of the City of Brownsville that he did hold the election thus ordered in conformity to the terms of the order on the 11th of June, 1870, and that at said election one hundred and thirty-nine votes were polled, and the result was one hundred and thirty-nine votes were cast for "bonds" and none for "no bonds."

And on the said 13th day of June, 1870, the said Mayor and Aldermen of the City of Brownsville did ordain as follows:

"On motion, the following ordinance was adopted, to wit: Whereas, it appears from the certificate of Jno. L. Sherman, sheriff of Haywood County, that in pursuance of an ordinance of this board passed 12th of May, 1870, that he did, on the 11th day of June, 1870, open and hold an election within the City of of Brownsville upon the proposition to issue fifty thousand dollars corporation bonds running twenty years, bearing interest from date at eight per cent per annum, payable in the City of St. Louis, Missouri, said bonds to be known as the Brownsville railroad bonds, and to be issued in aid of the construction of the Brownsville and Ohio Railroad, and that at said election one hundred and thirty-nine votes were cast in favor of said bonds and none against, it is therefore ordained by the board of mayor and aldermen of the City of Brownsville that the mayor, T. W. Tyus, subscribe to the Brownsville and Ohio Railroad Company the sum of fifty thousand dollars as stock, and that in payment of said subscription he sign and issue to said Brownsville and Ohio Railroad Company fifty thousand dollars corporation bonds, said bonds bearing interest from date at the rate of eight per cent per annum, payable in the City of St. Louis, Missouri, twenty years from date, said interest to be paid annually, said bonds to be issued in aid of the construction of said Brownsville and Ohio Railroad, and to be known as the Brownsville railroad bonds."

On the first day of July, 1870, fifty thousand dollars of the bonds of the City of Brownsville were issued under and in pursuance of the foregoing proceedings, payable July 1, 1890, and the same were by said City of Brownsville paid and delivered to the Brownsville and Ohio Railroad Company in payment of a subscription theretofore made by said City of Brownsville for fifty thousand dollars of the capital stock of said railroad company; and said stock so paid for was delivered by said railroad company to said City of Brownsville and has ever since been held and owned by said city. [482]

The following is a correct copy of one of the said fifty thousand dollars of bonds, and the others are like unto it:

"$500. United States of America. $500.
"City of Brownsville, State of Tennessee.
"Brownsville Railroad Bond.
"Interest at eight per cent, payable annually.

"*Know all men by these presents*, That the corporation of the City of Brownsville, Tennessee, is indebted to the bearer of this bond in the sum of five hundred dollars, for value received, which the said corporation hereby promises to pay on the first day of July, in the year one thousand eight hundred and ninety, at the office or agency of said corporation, in the City of St. Louis, Missouri, with interest thereon from the first day of July, eighteen hundred and seventy, at the rate of (8) eight per centum per annum, payable annually, at the said office or agency, on the first day of July of each year, on the presentation and surrender of the annexed coupons as they severally become due. This bond is one of a series of one hundred bonds for five hundred dollars each, numbered from one to one hundred, inclusive, amounting in the aggregate to fifty thousand dollars, and issued by authority of an Act of the Legislature of the State of Tennessee, passed February 8, 1870.

"In witness whereof the City of Brownsville has caused these presents to be signed by its mayor and recorder this the first day of July, 1870.

"T. W. TYUS, Mayor.
"JOHN CLINTON, Recorder."

G. W. Norton became the holder and owner for value before maturity, and without notice of any infirmity in said bonds other than that given him on the face of the bonds and by the Constitution and Laws of Tennessee, of the interest coupons which matured July 1, 1874, taken from said bonds numbered 5, 7, 27, and 41, and the interest coupons which matured on July 1, 1883, 1884, 1885, and 1886, taken from said bonds numbered 27, 35, 41, 44, 62, 82, 83, 84, 85, 86, 48, 49, 55, 57, 58, 60, 90, 91, 95, 96, 97, 98, 99 and 100, being four coupons which matured July 1, 1874, for $40 each, and 24 coupons which matured July 1, 1883, and 24 which matured July 1, 1884, and 24 which matured July 1, 1885, and 24 which matured July 1, 1886, aggregating 100 coupons of $40 each, and upon these 100 interest coupons the said G. W. Norton, on the 20th of May, 1887, instituted his said suit against the Board of Commissioners of the Taxing District in the City of Brownsville in said Circuit Court of the United States for the Western District of Tennessee, being No. 2933 on the law docket of said court, which is the cause recited in the caption hereof, to be submitted to said court upon the pleadings and this agreement of facts. [483]

The Mayor and Aldermen of the City of Brownsville at a meeting of said board, held

on March 18, 1871, took action, which is thus shown on the minutes of said board:

"On motion, the following ordinance was made and adopted:

"*Be it ordained* by the Board of Mayor and Aldermen of the City of Brownsville, Tennessee, That the Exchange Bank of St. Louis, in the State of Missouri, is hereby constituted and made the agency of the corporation of the said City of Brownsville, Tennessee, for the purpose of paying the principal and interest, as the same shall become due, of fifty thousand of eight per cent bonds issued by said corporation of Brownsville on the first day of July, 1870, and falling due on the first day of July, 1890; and the mayor is hereby authorized and instructed to collect promptly the taxes levied for the purpose of paying the interest on said bonds and for the purpose of establishing a sinking fund for the redemption of the same, and to place on deposit at the said Exchange Bank of the City of St. Louis by the first day of July of each and every year a sufficient amount in currency to redeem all of the coupons of said bonds falling due at that time and not otherwise redeemed."

484] The City of Brownsville paid the interest on said bonds for the years 1871 and 1872, and has paid the interest on some of them, matured since, for the years 1873, 1874, 1875, 1876, and 1877; but the coupons sued on as aforesaid by G. W. Norton in the case cited in the caption hereof have not been paid.

It is admitted that at an election for mayor of Brownsville, on January 7, 1871, there were 546 votes cast for mayor, and that on June 11, 1870, the citizens of Brownsville entitled to vote in the election held on that day were at least 546 in number. It is also admitted that the Brownsville & Ohio Railroad was never built, and has been abandoned.

It is also admitted that by an Act of 1879 the Charter of the City of Brownsville was repealed, and that a government was afterwards organized under the Act of April 1, 1881. All of these Acts and others thought applicable may be read from the books containing the Acts of Tennessee.

It is also admitted that there was no subscription by the authorities of Brownsville to the Brownsville & Ohio Railroad or to the corporation which preceded it, called the Brownsville & Dyer County Railroad, otherwise than is shown in the paper immediately following this agreement, before the passage of the Act of February 8, 1870; and it is also admitted that no election was held as contemplated in the ordinance set out in said paper.

Paper annexed to Agreement.

BROWNSVILLE, TENN., *May* 11, 1869.

At a called meeting of the board of mayor and aldermen, held in the mayor's office, members were all present except Recorder Clinton. The board was called to order and Alderman B. J. Lea appointed recorder *pro tem.* The minutes of the last meeting were read and adopted. A communication was received from Messrs. R. S. Thomas (chairman), J. P. Wood, Jno. R. Watkins, J. M. Rutledge, W. W. Vaughn, D. A. Nunn, and J. P. Parker, praying the board to order an election to vote a tax on the property in the corporation, for the purpose of aiding in building the Brownsville & Dyer County Railroad, which was received [485] and ordered to be filed; and, on motion, the following ordinance was passed:

"*Be it ordained* by the board of mayor and aldermen, That the proposition for the board of mayor and aldermen to levy a tax of one per cent per annum for five years on the taxable property of Brownsville, to aid in the construction of the Brownsville and Dyer County Railroad, for which said tax the said railroad company is, after the last payment, to issue certificate of stock for the amount which is paid by the Town of Brownsville, to be submitted to the legal voters of Brownsville on the 18th day of May, 1869. Those in favor of said appropriation will vote 'for railroad tax;' those opposed to said appropriation will vote against railroad tax.'"

The court instructed the jury that the bonds from which the coupons sued on were clipped were issued without the authority of law, and were void; and that the new Constitution, which went into effect on the 5th day of May, 1870, did not amend, but repealed and abrogated the Act of February 8, 1870, so far as said Act authorized the issuing of bonds by municipal corporations upon an election held after said new Constitution went into effect; and directed the jury to return a verdict for the defendants and against the plaintiff. To the giving of this instruction plaintiff then and there excepted. The jury returned a verdict for the defendants under this charge of the court.

Plaintiff then moved in arrest of judgment, and for a new trial, which motions were overruled; to all which holdings and rulings the plaintiff excepted and tendered his bill of exceptions which was duly signed, sealed, and made part of the record.

Judgment was rendered in favor of the defendants and against the plaintiff for costs, and he thereupon sued out this writ of error.

The Act of the General Assembly of Tennessee of February 8th, 1870, so far as in any way relating to the City of Brownsville, is as follows:

"AN ACT to confer upon the Town of Browns- [486] ville, in the County of Haywood, the authority to issue corporation bonds in aid of railroads, and for other purposes.

"SECTION 1. *Be it enacted, by the General Assembly of the State of Tennessee,* That section 71 of an Act passed the 15th day of February, 1869, or so much thereof as to change the name and style of the Brownsville and Dyer County Railroad to the Brownsville and Ohio Railroad, which road shall run from Brownsville *via* Friendship, instead of Chestnut Bluff and Dyersburg, to some point in the State of Kentucky west of the Tennessee River, to be determined by said railroad company.

"SEC. 2. *Be it further enacted,* That the corporate authorities of the City of Brownsville, in Haywood County, are hereby authorized to issue corporate bonds to the amount of two hundred thousand dollars, for railroad purposes, to be called Brownsville railroad bonds, running not exceeding twenty years, and bearing interest, payable annually, not exceeding the rate of interest at the place where said bonds are made payable.

"SEC. 3. *Be it further enacted,* That the

bonds authorized to be issued by this Act, or any part thereof, may be subscribed as stock in the Brownsville and Ohio Railroad Company, said bonds to be taken by said company at par, and to issue to the corporation of Brownsville certificates of stock of said railroad company, equal to the amount of bonds received from said corporation.

"SEC. 4. *Be it further enacted*, That upon the application of the president of the Brownsville and Ohio Railroad Company to the corporate authorities of the City of Brownsville, said authorities shall publish or cause to be published in the county newspaper, not less than twenty days, for the purpose of holding an election, to be held in the usual way, in said City of Brownsville, at which election all the legal voters shall have the privilege of voting for or against the issuance of said railroad bonds; and, unless a majority of the votes cast at such election be in favor of the proposed is-
[487] suance of railroad bonds, no authority shall be given by this Act to issue the same; but, in case a majority of the votes cast be in favor of the issuance of said bonds, the mayor of the city shall subscribe to the stock of said railroad company the amount so voted; said stock to be paid in bonds, as provided for by this Act.

"SEC. 5. *Be it further enacted*, That the corporate authorities of the City of Brownsville shall levy annually an assessment upon all the taxable property within the limits of the corporation, sufficient to pay the annual interest on the bonds that may be issued under the provisions of this Act, and also to establish a sinking fund for the ultimate redemption of said bonds.

"SEC. 6. *Be it further enacted*, That a subscription in bonds made by the corporation of the City of Brownsville to the Brownsville and Ohio Railroad Company, under the provisions of this Act, may be received in lieu of any other subscription heretofore made by said corporation to said railroad company; and that the provisions of the foregoing sections of this Act shall apply to the Towns of Troy and Union City, in Obion County, to the same extent as the same applies to the City of Brownsville. . . . . .

"SEC. 18. *Be it further enacted*, That stock which has been subscribed, or may hereafter be subscribed, by any county, city, or incorporation, to said railroad companies, may be payable in six annual payments; and it shall be lawful for county courts and the corporate authorities of any city or town, making such subscription, to issue *short* bonds bearing interest at the rate of six per cent per annum, to said railroad companies, in anticipation of the collection of annual levies, if thereby the construction of the roads can be facilitated.

. . . . . .

"SEC. 22. *Be it further enacted*, That this Act shall take effect from and after its passage.

"Passed February 8, 1870."

Chap. LV, Acts of Legislature of Tennessee, 1869-70, p. 360.

Messrs. **Sparrel Hill, Henry Craft** and **L. P. Cooper**, for plaintiff in error:

The issuance of such bonds is not among the inherent capacities, or implied corporate powers, of a municipality. In the absence of constitutional limitation, the Legislature could give the authority upon just such terms as it might choose.

Ottawa v. *Carey*, 108 U. S. 123 (27:675).

In Tennessee, under the old Constitution, there was no restriction upon the power of the Legislature to grant this authority.

Nichol v. *Nashville*, 9 Humph. 252; *Louisville & N. R. Co.* v. *Davidson Co. Ct.* 1 Sneed, 667.

Upon the rules of constitutional interpretation that obtain in Tennessee (*Pope* v. *Phifer*, 3 Heisk. 682; *Jackson* v. *Nimmo*, 3 Lea, 600), section 29 of the Constitution of 1870 must be addressed to the Legislature, and limit legislative power; or it must be addressed directly to the counties, cities and towns, and operate as a self-executing condition imposed upon them.

In the view first stated, it would be prospective, and have no effect upon antecedent legislation.

Callaway Co. v. *Foster*, 93 U. S. 567 (23:911); *Calhoun Co.* v. *Galbraith*, 99 U. S. 214 (25:410); *Schuyler Co.* v. *Thomas*, 98 U. S. 169 (25:88).

This would leave the Act of February 8, 1870, in full force, and unaffected by the new Constitution.

In the other view, the construction of the Indiana Constitution implied in *Aspinwall* v. *Daviess Co.* 63 U. S. 22 How. 364 (16:296), is claimed by opposing counsel as applicable, and also the construction of the Illinois Constitution.

Concord v. *Robinson*, 121 U. S. 165 (30:885).

Even if the clause of the Tennessee Constitution is to be considered as addressed to the counties, cities and towns, and not to the Legislature, it still so far involves the necessary action of the Legislature as to make it prospective in its operation.

Groves v. *Slaughter*, 40 U. S. 15 Pet. 449 (10:800); *Jarrolt* v. *Moberly*, 103 U. S. 585 (26:493); *Green* v. *Dyersburg*, 2 Flipp. 477-91.

Admitting that legislative authority to hold the election was necessary, the Act of February 8, 1870, if only affected as was held in *Green* v. *Dyersburg*, *supra*, gave this authority.

Ray Co. v. *Vansycle*, 96 U. S. 675 (24:800); *Norton* v. *Shelby Co.* 118 U. S. 425 (30:178). *Katzenberger* v. *Aberdeen*, 121 U. S. 178 (30:913);

Messrs. **W. W. Rutledge** and **Wm. M. Smith**, for defendant in error:

A municipal corporation has no inherent power to lend its credit or issue bonds. This power must be conferred by the Legislature.

Burroughs, Public Securities, 367 *et seq.* and authorities cited; *Harshman* v. *Knox Co.* 122 U. S. 306, 317 (30:1152, 1154); Cooley, Const. Lim. 5th ed. p. 269, *p. 215.

The reference to the Act in the bonds gave notice to the holders that the Act of 1870 was the authority for issuing them.

Burroughs, Public Securities, 329 *et seq.*; *McClure* v. *Oxford Twp.* 94 U. S. 429 (24:129).

Article II, § 29, 2d clause, of the Constitution operated at once as a prohibition on all municipal corporate subscription, until an enabling Act should be passed, giving the power in accordance with its provisions.

Cooley, Const. Lim. 5th ed. 98 *et seq.*; *Bass* v. *Nashville*, Meigs, 421; *Yerger* v. *Rains*, 4 Humph. 259; *Friedman* v. *Mathes*, 8 Heisk. 488, 498-9; *Brien* v. *Williamson*, 7 How. (Miss.)

14; *Johnson* v. *Parkersburg*, 16 W. Va. 402; *S. C.* 37 Am. Rep. 779.

All negative or prohibitive provisions in a Constitution are self executing.

Law v. *People*, 87 Ill. 385; *Hayes* v. *Holly Springs*, 114 U. S. 120 (29:81); *Allen* v. *La.* 103 U. S. 80 (26:318); *Jarrolt* v. *Moberly*, 103 U. S. 580 (26:492).

When a prohibition is directed against the municipalities themselves, as in article II, § 29, of said Constitution, the power in the municipalities is annulled.

Aspinwall v. *Daviess Co.* 63 U. S. 22 How. 364 (16: 296); *Wadsworth* v. *Eau Claire Co.* 102 U. S. 534 (26: 221); *Concord* v. *Portsmouth Sav. Bank*, 92 U. S. 625 (23: 628); *Concord* v. *Robinson*, 121 U. S. 165 (30: 885); *Falconer* v. *Buffalo & J. R. Co.* 69 N. Y. 491; *Buffalo & J. R. Co.* v. *Falconer*, 103 U. S. 821 (26: 471); *Jeffries* v. *Lawrence*, 42 Iowa, 498.

It is proper to look to proceedings of the Convention in determining the meaning of any portion of the Constitution.

Cooley, Const. Lim. 5th ed. 79 *et seq.*; *State* v. *Cloksey*, 5 Sneed, 482; *Luehrman* v. *Shelby Co. Tax Dist.* 2 Lea, 431.

[488] *Mr. Chief Justice* **Fuller** delivered the opinion of the court:

The question to be determined in this case is whether the Act of February 8, 1870, set forth in the foregoing statement, could be availed of under the provisions of the Constitution of Tennessee, which was adopted by vote of the people March 26, 1870, and went into effect on the 5th day of May of that year.

By that Act the corporate authorities of the City of Brownsville, in Haywood County, Tennessee, were authorized to issue corporate bonds to the amount of two hundred thousand dollars for railroad purposes, to be subscribed as stock in the Brownsville and Ohio Railroad Company, certificates of stock in the latter to be issued to the municipality to the amount of the bonds received; and an election was provided for, to be held upon twenty days' notice, "at which election all the legal voters shall have the privilege of voting for or against the issuance of said railroad bonds; and unless a majority of the votes cast at such election be in favor of the proposed issuance of railroad bonds, no authority shall be given by this Act to issue the same; but in case a majority of the votes cast be in favor of the issuance of said bonds, the mayor of the city shall subscribe to the stock of said railroad company the amount so voted; said stock to be paid in bonds, as provided for by this Act."

The 29th section of article II of the State Constitution of 1834–'5 was as follows:

"The General Assembly shall have power to authorize the several counties and incorporated towns in this State to impose taxes for county and corporation purposes respectively, in such manner as shall be prescribed by law; and all property shall be taxed according to its value, upon the principles established in regard to state taxation."

[489] This language was retained in section 29 of article II of the Constitution of 1870, which then proceeded thus:

"But the credit of no county, city, or town shall be given or loaned to or in aid of any person, company, association, or corporation, except upon an election to be first held by the qualified voters of such county, city, or town, and the assent of three fourths of the votes cast at said election. Nor shall any county, city, or town become a stockholder, with others, in any company, association or corporation, except upon a like election, and the assent of a like majority."

Then came an exception of certain enumerated counties from the operation of the restriction until 1880. Sections 1 and 2 of article XI provided:

"Section 1. All laws and ordinances now in force and in use in this State, not inconsistent with this Constitution, shall continue in force and use until they shall expire, or be altered or repealed by the Legislature. But ordinances contained in any former Constitution, or schedule thereto, are hereby abrogated.

"Section 2. Nothing contained in this Constitution shall impair the validity of any debts or contracts, or affect any rights of property, or any suits, actions, rights of action, or other proceedings in courts of justice."

It is clear that the inhibition imposed by section 29 of the Constitution of 1870 operates directly upon the municipalities themselves, and is absolute and self executing; and although power is reserved to the Legislature to enable them to give or loan their credit, and to become stockholders, upon the assent of three fourths of the votes cast at an election to be held by the qualified voters, the county, city or town is destitute of the power to do so until legislation authorizing such election and action thereupon is had.

The prohibition of the gift or loan of credit or the subscription to stock without a three-fourths vote, is not an affirmative grant of authority to give or loan credit or to become a stockholder upon a three-fourths vote.

Prior to the Constitution of 1870, the Legislature could have conferred on a a municipal corporation the power to give or loan its credit, or to subscribe for stock, on such terms and conditions as the Legislature chose to impose; [490] but after that Constitution went into effect, the municipality was deprived of any power previously conferred, and could thereafter do none of these things save by an Act of the Legislature imparting the power as limited by the Constitution.

In *Aspinwall* v. *Daviess County*, 63 U. S. 22 How. 364 [16: 296], the provision in the State Constitution of Indiana, forbidding counties from loaning their credit to any incorporated company, or loaning money for the purpose of taking stock in any such company, and from subscribing for stock, unless paid for when subscribed, was held to have withdrawn all authority to make subscriptions to the stock of incorporated companies, except in the manner and under the conditions prescribed by that instrument, and that consequently a subscription made and bonds issued after the Constitution took effect, under an Act of the Legislature previously passed, were without authority and void. See *Wadsworth* v. *Eau Claire County*, 102 U. S. 534, 537 [26: 221, 222].

The same view was held in *Concord* v. *Portsmouth Savings Bank*, 92 U. S. 625 [23: 628], as to a similar provision in the Constitution of Illinois, which went into effect July 2, 1870; and in *Falconer* v. *Buffalo & J. R. Co.* 69 N. Y. 491, arising under the Amendments of 1874-'5 to the Constitution of New York. *Buffalo & J. R. Co.* v. *Falconer*, 103 U. S. 821 [26: 471].

These cases sufficiently illustrate the distinction between the operation of a constitutional limitation upon the power of the Legislature, and of a constitutional inhibition upon the municipality itself. In the former case, past legislative action is not necessarily affected, while in the latter it is annulled. Of course, if an entirely new organic law is adopted, provision in the schedule or some other part of the instrument must be made for keeping in force all laws not inconsistent therewith, and this was furnished in this instance by the first section of article XI; but such a provision does rot perpetuate any [previous law enabling a municipality to do that which it is subsequently forbidden to do by the Constitution.

The inhibition being self executing and operating directly upon the municipality, and not in itself enabling the latter to proceed in accordance with the prescribed limitation, further legislation is necessary before the municipality can act.

[491] Thus, in *Jarrolt* v. *Moberly*, 108 U. S. 580 [26: 492], an Act of the General Assembly of Missouri, approved March 18, 1870, which provided that it should be lawful for the council of any city, or the trustees of any incorporated town, to purchase lands, and to donate, lease or sell the same to any railroad company, and, for the purposes of assisting and inducing such railroad company to locate and build machine shops on such lands, and, for such purposes, to levy taxes, borrow money, and issue bonds, upon the assent of a majority of the qualified voters, was held void as in conflict with a provision of the State Constitution of 1865, declaring that the General Assembly should not authorize any county, city, or town to become a stockholder in, or loan its credit to, any company, association, or corporation, unless two thirds of the qualified voters of such county, city, or town, at a regular or special election, should assent thereto. On the 16th of February, 1872, another Act was passed providing that "No county court of any county, city council of any city, nor any board of trustees of any incorporated town, shall hereafter have the right to donate, take, or subscribe stock for such county, city, or incorporated town in, or loan the credit thereof to, any railroad company, or other company, corporation, or association, unless authorized to do so by a vote of two thirds of the qualified voters of such county, city, or incorporated town." The election authorizing the issue of bonds was held on the 26th day of March, 1872. On the 29th of March, 1872, the Legislature passed another Act, so amending the 6th section of the Act of March 18, 1870, as to provide for the assent of two thirds of the qualified voters of such town or city, at a regular or special election to be held therein. And this court further held that the Act of the Legislature of February 16, 1872, was merely prohibitory in its character, forbidding the officers of counties, cities, and towns to loan the credit thereof or donate to or subscribe stock in any railroad or other company, without the previous assent of two thirds of their qualified voters, and in itself conferred no authority on those officers when such assent was given; and *Mr. Justice* Field, delivering the opinion, says: "Further legislation was needed. Such was the evident opinion of the Legisla- [492] ture of the State, for, by an additional Act, passed on the 29th of March, 1872, the authority was given in terms."

The rule thus laid down is decisive of the case at bar. The constitutional provision prohibited all municipal gifts, loans, or subscriptions, except when authorized upon certain conditions, but it did not, in itself, operate to confer authority. Further legislation was needed, and such was the evident opinion of the Legislature of the State, for, on the 16th of January, 1871, it passed an Act entitled "An Act to Enforce Article II, Section 29, of the Constitution, to Authorize the Several Counties and Incorporated Towns in this State to Impose Taxes for County and Corporation Purposes," thus giving a practical construction immediately after the adoption of the Constitution.

"This Act," says the court in *Kelley* v. *Milan*, 127 U. S. 139, 154 [*ante*, 77, 83], "was manifestly passed for the object stated in its title, to carry into effect the provisions of section 29 of article II of the Constitution of 1870, and to prescribe the manner and the conditions, in conformity with the provisions of that section, in and upon which the several counties and incorporated towns in the State should have the right to impose taxes for county and corporation purposes;" and as to the second clause of the first section of the Act, which repeats the language of the Constitution, it is remarked: "The enactments in that clause are entirely inhibitory and negative in their character. They do not confer any authority for the giving or loaning of credit upon any municipality, nor confer the right upon any municipality to become a stockholder with others in any corporation; but they only prescribe the condition that no credit shall be given or loaned, and no ownership of stock be created, unless the prescribed election be first held and the assent of three fourths of the votes cast at it be first given. But the authority to give or loan credit, and to become a stockholder, under the conditions prescribed in the Act of 1871, must be found in an independent grant of authority, in some other statutory provision, either general or special." *Pulaski* v. *Gilmore*, 21 Fed. Rep. 870; *Milan* v. *Tenn. Cent. R. Co.* 11 Lea, 330.

It will be perceived that we do not assent to [493] the view that when the state government commenced under the new Constitution, the Act of February 8, 1870, was amended by section 29 of article II, so as to substitute a vote of three fourths for that of a majority, and re-enacted, so to speak, by the first section of article XI, above quoted.

The power of ordinary legislation is vested, under all our Constitutions, in the Legislatures, and the Constitutional Convention of Tennessee did not assume to exercise such power. The amendment of a law is usually accomplished according to a prescribed course, and there is nothing here to justify the conclusion that section 29 of article II was designed to op-

erate by way of amendment to prior laws; nor can it so operate, nor the Act of 1870 be held to have been kept in force, for the reasons already indicated.

The proceedings resulting in the issue of the bonds whose validity is under consideration were initiated May 11, 1870, five days after the Constitution went into effect, and the election was held on the 11th day of June following.

In our opinion there was no authority to hold the election and to issue the bonds, and their holders consequently cannot recover,

The judgment of the Circuit Court will therefore be affirmed.

---

[493] THE COMMISSIONERS OF THE TAXING DISTRICT OF THE CITY OF BROWNSVILLE, TENNESSEE, *Plffs. in Err.*,

v.

JOHN LOAGUE, Admr.

(See S. C. Reporter's ed. 493-505.)

Mandamus—City of Brownsville—power to tax to pay railroad bonds—repeal of statute—judgments upon coupons of void bonds—mandamus when denied—duty of court—res judicata.

1. Mandamus lies to compel a party to do that which it is his duty to do without it. It confers no new authority, and the party to be coerced must have the power to perform the act.

2. The City of Brownsville possesses no inherent power to tax. The power vested in it by its Act of incorporation is confined in its exercise to taxation for ordinary municipal purposes and the payment of debts contracted in the ordinary administration of municipal affairs.

3. Debt created by the issue of bonds in aid of railroad construction was not within the purview of the charter power of said city; but by the Act of February 8, 1870, the power to tax to pay the interest on and create a sinking fund for the redemption of the bonds authorized to be issued thereunder was expressly given.

4. This express grant of power fell with the abrogation of the Act by the taking effect, on May 5, 1870, of the new State Constitution.

5. Where application was made for a mandamus to compel the commissioners of said city to levy a tax to pay judgments upon coupons of bonds issued by the city, and this court has held that the bonds were void, and the power to levy taxes by the city to pay debts of the character represented by these judgments did not exist in March, 1886, when the mandamus was applied for, so that the plaintiff was remitted, in the assertion of a right to that remedy, to the time when the bonds were issued, and it appeared from the judgment record and the petitions that the bonds were issued under an abrogated statute, and were void, *held*, that the respondents possessed no power to tax to pay them, as the statute giving that power ceased to exist.

6. Where application is made to collect judgments by process not contained in themselves, and requiring, to be sustained, reference to the alleged cause of action upon which they are founded, the aid of the court should not be granted when, upon the face of the record, it appears, not that mere error intervened in the rendition of such judgments, but that they rest upon no cause of action whatever.

7. When the relator is obliged to go behind his judgment to obtain the remedy pertaining to the bonds, the court will take cognizance of the facts that the bonds are utterly void and that no such remedy exists.

8. The doctrine of *res judicata* does not aid the relator in such a case.

[No. 1445.]

Submitted Jan. 4, 1889. Decided March 5, 1889.

IN ERROR to the Circuit Court of the United States for the Western District of Tennessee, to review a judgment awarding a peremptory writ of mandamus to collect a tax to pay judgments. *Reversed.*

See *S. C.* below, 36 Fed. Rep. 149.

[494] Statement by *Mr. Chief Justice* **Fuller:**

This is a writ of error to the Circuit Court of the United States for the Western District of Tennessee, bringing under review the judgment of that court awarding a peremptory mandamus in favor of John Loague, administrator of R. D. Baker, deceased, against the Board of Commissioners of the Taxing District of the City of Brownsville, Tennessee, to proceed "to levy and collect and pay over to petitioner a tax sufficient to pay each and all" of certain judgments described in the petition for such mandamus.

The petition was filed March 19, 1886, and set forth that Baker was in his lifetime the owner and holder for value of certain coupons representing interest on certain bonds issued by the City of Brownsville, Tennessee, under an Act of the General Assembly of that State, passed February 8, 1870 (being the Act referred to in the foregoing cause of *Norton* v. *Brownsville*, *ante*, 785), upon which he obtained four judgments against said city, in said court, namely: one March 1, 1876, for $2,628 and costs of suit; another December 20, 1876, for the sum of $822.50 and costs; another December 21, 1877, for the sum of $822.66 and costs; another on the 14th day of December, 1878, for the sum of $821.60 and costs; that executions were issued on all of said judgments, upon which returns of *nulla bona* were made, and thereupon said Baker instituted proceedings on three of said judgments to compel by mandamus the levy and collection of a tax to satisfy said judgments and costs; which resulted in the collection of $1,200 on the first judgment, and an unavailing assessment and levy on the second, and [495] perhaps on the third; but that, except as to the amount aforesaid, all of said judgments remained unpaid; that on the 24th of February, 1879, the General Assembly of Tennessee repealed the Charter of the City of Brownsville, but provided in the repealing Act that it should "not be so construed as to impair the obligation of existing contracts into which said corporation has heretofore entered." That by an Act of the General Assembly of Tennessee, approved March 14, 1879, it was provided that the Governor of the State should appoint an officer for the corporations whose charters had been repealed, to be known as a receiver and back-tax collector, whose duty it should be to collect all back taxes of such municipalities remaining uncollected at the repeal of their charters; that such officer was appointed for Brownsville but did not qualify, and it was impossible for petitioner's intestate to receive any benefit intended to be secured by the appointment and qualification of such officer; and that on the first day of April, 1881, the people and territory of the City of Brownsville were again incorporated and organized into a municipal corporation known as the Taxing District of Brownsville, under an Act entitled "An Act to Establish Taxing Districts

of the Second Class, and to Provide the Means of Local Government Therefor," which is given in substance in said petition, together with certain provisions of an Act amendatory thereof, passed April 4, 1885.

Reference is also made to an Act of January 31, 1879, applicable to "the several communities embraced in the territorial limits of all such municipal corporations in this State, as have had, or may have, their charters abolished," and which provides, as to the commissioners and trustee constituting governing agencies, that "No writ of mandamus or other process shall lie to compel them to levy any taxes; nor shall the commissioners or said trustee, nor the local government created by this Act, pay or be liable for any debt created by said extinct corporation, nor shall any of the taxes collected under this Act ever be used for the payment of any of said debts," which prohibition in that Act and Acts amendatory thereof petitioner insists is null and void.

[496] Petitioner avers that defendants have, under the Act of April 1, 1881, and the Act of April 4, 1885, power to levy and collect taxes to pay said judgments, and then says: "That the defendant corporation, the Taxing District of Brownsville, and its predecessor, the City of Brownsville, have no assets or means of payment of petitioner's judgments aforesaid, and petitioner's only remedy to enforce the collection of his judgments is that awarded by the Act authorizing the issue of the bonds from which the coupons were detached upon which said judgments were obtained; and petitioner is advised that said remedy remains in full force against the defendants as the municipal authorities of the Taxing District of Brownsville, and can be invoked against them as effectually as it could have been against the corporate authorities of the City of Brownsville before its charter was repealed."

Petitioner prays in conclusion, together with other relief not material to be mentioned here, for an alternative writ, on hearing to be made peremptory, "commanding defendants to levy and collect a tax sufficient to pay petitioner's judgments aforesaid, and all costs on same, and all costs incurred in his mandamus proceedings heretofore had by his intestate to collect the same."

On the 27th of March, 1886, a rule to show cause was entered, to which defendants appeared and moved to quash, which motion was treated by agreement as a demurrer, and subsequently the court delivered its opinion in decision of the questions thus raised (29 Fed. Rep. 742), a portion of which is as follows:

"Following a public policy reviewed in its application to the City of Memphis in *Meriwether* v. *Garrett*, 102 U. S. 472 [26: 197], the Legislature of Tennessee, in 1879, inaugurated a plan of relief for insolvent municipal corporations, whereby it was expected they could escape the payment of their debts, unless the creditors would accept the 'settlements' tendered them under the provisions of the legislation. The general plan was to repeal the charters, so that there should be no officials or agencies liable to judicial compulsion by mandamus; then to supply other agencies of local [497] government invested with all the powers of the old municipalities, except the taxing power, which was not only withheld, but conspicuously prohibited to those new organizations called 'taxing districts.' The taxes for carrying on the new contrivances were to be levied directly by the Legislature itself upon the taxables within their boundaries, and, that body not being amenable to any judicial coercion by mandamus, it was believed that the creditors were wholly without remedy. The Legislature then provided for a settlement with creditors upon the general basis of refunding the old indebtedness at the half, the amount at which the State 'settles' or 'compromises' its own indebtedness. The taxes to pay the interest and principal of the new bonds, like other taxes for municipal purposes, were to be levied directly by the Legislature; but provision is made that in default of such levy the 'taxing districts' may themselves levy the necessary tax. Acts 1883, c. 170, p. 224. This Act applies to all 'taxing districts' of whatever class, and by its twentieth section 'repeals all laws or parts of laws in conflict herewith.'" . . . "The Legislature repealed the defendant's charter in 1879, the judgments here involved being at that time unsatisfied in this court. Acts 1879, c. 27, p. 41. In 1881 the formation of 'taxing districts of the second class' was authorized, and under that Act such a 'taxing district' was organized for Brownsville in 1883. Acts 1881, c. 127, p. 174. By these two Acts 'commissioners' were substituted for the formerly existing 'mayor and aldermen,' with all the usual authority, legislative, executive and judicial, except the power to levy taxes, which was prohibited; but the Act of 1879 especially enacted that nothing contained in it should impair the obligation of then existing contracts, and the Act of 1881 'hereby levied' a tax of one dollar per hundred, one half of which was to be applied to the current expenses and the other to the old debts. Specific power was also given to one of the 'commissioners,' called the 'secretary and financial agent,' to assess and collect this tax. The general Act of 1883, already noticed, relating to all taxing districts had been passed, but by an Act of 1885 the Act of 1881, relating to 'taxing districts of the second class,' was amended, and section 2 gives the commissioners the most ample power to levy taxes and ap- [498] propriate money to provide for the payment of 'all the debts and current expenses of the districts.' Acts 1885, c. 82, p. 162. It is apparent that, notwithstanding the general Act of 1883, and its broad repealing clause, the Legislature (or rather the authors of this legislation relating to Brownsville) considered the Act of 1881 as wholly unaffected by it. But by a subsequent Act of 1885, at the extra session, the full powers given under the former Act of that year were taken away, or rather limited to the payment of the 'compromise' bonds only, the evident object of the last Act being to correct this careless blunder of a departure from the general plan of relief already fully commented upon. Acts extra Sess. 1885, c. 10, p. 75."

The Act of the extraordinary session referred to was approved June 10, 1885, and reads thus:

"SECTION 1. *Be it enacted*, by the General Assembly of the State of Tennessee, That section 2 of an Act entitled 'An Act to Establish

Taxing Districts of the Second Class, and to Provide the Means of Local Government Therefor,' passed March 30, 1885, be so amended as to read as follows: That section 8 of said Act, passed April 1, 1881, be so amended as that the board of commissioners, after the debts of the taxing districts shall have first been compounded between said taxing districts and creditors, shall have power by ordinance within the district to levy taxes upon all property taxable by law for state purposes, and upon all privileges and polls taxable by law for state purposes, and may appropriate the money arising from the collection of taxes so levied, after defraying the current expenses of the taxing district, to the payment of the debts of said taxing district that have been compromised; and anything in said section 2, or in the Act passed March 30, 1885, in conflict with this Act is hereby repealed.

"SEC. 2. *And be it farther enacted*, That this Act take effect from and after its passage, the public welfare requiring it."

The following were among the conclusions reached and announced by the court:

If a municipal charter be repealed and the same inhabitants and territory be reorganized [499] into another corporation, the latter is the successor of the former, both in the corporate obligation to pay the existing debts and those corporate powers of taxation conferred as a part of the remedy of the creditors; and any statutory prohibition of its exercise is void, under the inhibition of the Federal Constitution against impairing the obligation of contracts.

Those agencies existing for the local government of a municipality are bound to perform such duties as are necessary to enforce the taxing power, although not especially designated for that purpose, if there be a general grant of the power of taxation to the municipality itself. This duty is implied from the general grant, whether it be conferred directly by statute upon the particular municipality or devolved upon it as the successor in corporate obligation through a grant to its predecessor; therefore a mandamus will lie to enforce, by taxation, the payment of judgments against the original corporation, to be directed to the governmental agencies of the new corporation, they to proceed according to the general laws of the State governing the exercise of the taxing power by municipalities possessing the authority.

Under the legislation of Tennessee repealing municipal charters and reorganizing the inhabitants into taxing districts, contrived to compel creditors to accept a compromise of their debts at reduced amounts, the prohibitions of the exercise of the taxing power by the new local governments are void, so far as relates to those grants of that power to the old corporations, which enter into contracts as a part of the remedy of creditors; and the "taxing districts" may be compelled to exercise the power given by these original grants, by proceeding, according to the general tax laws of the State, to certify to the county court clerk the necessary rate to pay the judgment, to be extended upon the tax books and collected as other taxes are collected. It is not necessary that the particular officials to perform this duty shall be designated in the statute; but the general grant to the corporation implies that the officials governing the municipality shall perform it, and it will be enforced by mandamus against the new commissioners who take the place of the former mayor and aldermen.

Any taxes levied by the Legislature for mu- [500] nicipal purposes, or grants of power to a municipality to make such levies, may be repealed, if they be subsequent to the contract involved, as there is no protection under the Federal Constitution, except for such powers of taxation as enter into and become a part of the contract itself and belong as a remedy to the creditor.

The demurrer having been overruled, the respondents answered, denying the possession of any power or authority to levy any tax whatever to pay judgments and indebtedness such as represented by the petitioner; and averring that the old corporation had no power or authority in law to levy a tax for such purposes, and consequently no such power or authority devolved upon the taxing district; and that the power and authority to issue the bonds and levy a tax to pay interest thereon, upon which plaintiff's suits were founded, "was given to Brownsville by the Act of February 8, 1870, by the Legislature of Tennessee, but before the contract was completed or the election under said Act of 1870 held by Brownsville, or the bonds issued, the said Act of 1870 was repealed and abrogated by the Constitution of the State of Tennessee, which went into effect May 5, 1870." Respondents further alleged that the judgments were obtained by default, and that on the previous mandamus proceedings the question of want of power because of the abrogation of the Act of February 8, 1870, was not raised. Motion to quash this answer or return was then made by petitioner, and the cause submitted upon such motion, together with an agreed statement of facts to the same effect as the statement in the preceeding case, No. 1442, it being also stipulated that the judgments had been obtained by default and that the question of power in the corporation to levy a tax because the Act of 1870 had been abrogated by the Constitution was not raised in defense to the previous applications for writs of mandamus.

The circuit court held (36 Fed. Rep. 149) that "No defense can be made to a writ of mandamus issued upon a judgment by default against a municipal corporation which might have been made to the original suit upon the coupons," and "therefore, where bonds issued [501] without legislative authority were invalid, that the defendant corporation was bound by a judgment by default upon the coupons, and could not set up as a defense to the mandamus that there was no Act commanding the tax to be levied, this being the same defense as the other, when it depends upon want of authority to issue the bonds, as in this case."

In the opinion of the court, although the Act of February 8, 1870, was abrogated by the State Constitution and the bonds were therefore void, yet judgment upon the coupons conclusively established the validity of the bonds, and so also the validity of the legislation giving the remedy by a levy of taxes for their payment.

The return of the respondent was accordingly quashed, and judgment entered awarding the peremptory writ as prayed.

Messrs. **W. W. Rutledge** and **Wm. M. Smith**, for plaintiffs in error:

Where the petition or writ shows the bar, a demurrer or motion to quash is proper.

Cannon v. *Laman*, 7 Lea, 518.

When the holder took the bonds, he was chargeable with knowledge that the election and issuance were both after the Constitution, and also with notice that the Constitution annulled the Act under which the bonds purport to be issued.

Concord v. *Robinson*, 121 U. S. 165, 170 (30: 885, 888).

The corporation must have the authority to levy and collect taxes for the particular debt reduced to a judgment before a mandamus can issue.

Burroughs, Public Securities, 539-546; *Heine* v. *Leves Comrs.* 86 U. S. 19 Wall. 655 (22: 223).

We have no power by mandamus to compel a municipal corporation to levy a tax which the law does not authorize.

U. S. v. *Macon Co.* 99 U. S. 582 (25: 331).

The remedies given by the original contract are carried with it when merged into a judgment, and these remedies are all the creditor has.

Harshman v. *Knox Co.* 122 U. S. 306 (30: 1152); *Ralls Co. Ct.* v. *U. S.* 105 U. S. 733 (26: 1220); *Jeffries* v. *Lawrence*, 42 Iowa, 498.

The power to subscribe for stock in a railroad does not include the power to tax to pay for the stock.

Dillon, Taxn. 678; Dillon, Mun. Corp. § 605; Cooley, Const. Lim. 518; 2 Desty, Taxn. 1053-1076.

The writ of mandamus is nothing more than an action at law between the parties.

Ky. v. *Dennison*, 65 U. S. 24 How. 66 (16: 717).

It does not issue as a matter of right. It is in the nature of an action.

Moody v. *Fleming*, 4 Ga. 115, 48 Am. Dec. 210.

It is not grantable as of absolute right.

High, Extr. Rem. §§ 5-8; Moses, Mandamus, 18 *et seq.*; *Judd* v. *Driver*, 1 Kan. 455; *McBane* v. *People*, 50 Ill. 503.

Messrs. **Sparrel Hill, Henry Craft** and **L. P. Cooper** for defendant in error.

Mr. Chief Justice **Fuller** delivered the opinion of the court:

Mandamus lies to compel a party to do that which it is his duty to without it. It confers no new authority, and the party to be coerced must have the power to perform the act.

On the 19th of March, 1886, when this petition was filed, had the board of commissioners the power to levy and collect taxes to pay the judgments in question?

The circuit court, in deciding that it had, proceeded upon the ground that the source of power was the Act of February 8, 1870, and we concur in the view that there was no other. The City of Brownsville possessed no inherent power to tax; and while under an Act of February 24, 1870, its inhabitants were constituted a corporation and body politic by the name and style of the "Mayor and Aldermen of the City [502] of Brownsville," with power by ordinance "to levy and collect taxes upon all property, privileges, and polls taxable by the laws of this State, to appropriate money, and to provide for the payment of the debt and expenses of the city," the power so vested was confined in its exercise to taxation for ordinary municipal purposes, and the payment of debts contracted in the ordinary administration of municipal affairs. Debt created by the issue of bonds in aid of railroad construction was not within the purview of the charter power; but by the Act of February 8, 1870, the power to tax to pay the interest on and create a sinking fund for the redemption of the bonds authorized to be issued thereunder was expressly given.

This express grant fell with the abrogation of the Act by the taking effect on the 5th of May, 1870, of the new State Constitution, and in *Norton* v. *Brownsville, ante*, 785, we have held that the bonds, upon coupons detached from which the judgments sought to be collected here were rendered, were void, not because of a defective exercise of the power to issue them, but because of a total absence of such power.

It is, however, contended that the coupons having passed into judgments, not only is all inquiry into their validity precluded, but also any denial of the power to tax to pay them granted by the Act of February 8, 1870.

As already remarked, the circuit court did not hold that the peremptory writ should go to command a levy to pay judgments as debts in that form, but based its order upon the inability of the respondents by reason of the judgments to assert the abrogation of the Act in question.

Under the legislation between the issue of the bonds in 1870 and this application in March, 1886, authority to levy taxes to pay debts of the character represented by these judgments, when uncompromised, did not exist at the latter date, so that plaintiff was remitted, in the assertion of a right to that remedy, to the time when the bonds were issued, and as the city had then no power to tax to pay them other than that derived from the Act of February 8, 1870, the relator by his pleadings opened the facts which attended the judgments for the pur- [503] pose of counting upon that Act as furnishing the remedy which he sought. In this he in effect asked the court to order the levy of a tax to pay the coupons, and relied on the judgments principally as creating an estoppel upon a denial of the power to do so.

Thus invited to look through the judgments to the alleged contracts on which they are founded, and finding them invalid for want of power, must we nevertheless concede to the judgments themselves such effect, by way of estoppel, as to entitle the plaintiff *ex debito justitiæ* to a writ commanding the levy of taxes under a statute which was not in existence when these bonds were issued?

The case of *Harshman* v. *Knox County*, 122 U.S. 306 [30: 1152], is referred to by the learned Judge holding the circuit court as in principle identical with this.

In that case, under section 17 of the General Railroad Law of Missouri, the county court of a county was authorized to subscribe to the stock of railroad companies, though created by special charter, provided the requisite assent of the qualified voters was duly obtained; and section 18 of the law provided that a special tax might be levied for the purpose of paying such

bonds *without limit as to its amount.* Under section 13 of the Act incorporating the Missouri and Mississippi Railroad Company, taxes might be levied to pay bonds issued thereunder, but not to exceed one twentieth of one per cent upon the assessed value for each year. Harshman recovered judgment upon bonds and coupons issued by Knox County in part payment of a subscription made by said county to the capital stock of the Missouri and Mississippi Railroad Company, upon a petition setting forth that the subscription was authorized under the 17th section of the General Railroad Law. The judgment not being paid, he brought his proceedings by mandamus for the levy of a special tax to pay it, without limit as to the percentage, again alleging that the subscription, in part payment of which the bonds were issued, was authorized by vote under said 17th section.

Upon the trial the circuit court required the relator to put in, with the record of the proceedings and judgment, the bonds; and it appeared that the latter recited that they were issued for a subscription authorized by the Act incorporating "the Missouri and Mississippi Railroad Company;" and as the jury found that the relator had not proved that, despite the recitals in the bonds, they were issued under the general law, the court rendered judgment in favor of the respondents. But this court reversed that judgment upon the ground that, as "It was part of the plaintiff's case to show, not merely the execution of the bonds by the county authorities, but that they were issued in pursuance of a law making them the valid obligations of the county," and it having been averred that they were issued under section 17 of the General Railroad Law (c. 68, Stat. at L. 1866), that fact was confessed by the default, and its truth stood admitted on the record, and as mandamus in such cases was a remedy in the nature of an execution, it could in that case be limited in its mandate "only by that which the judgment itself declares." And the court says, *Mr. Justice* Matthews delivering the opinion: "It may well be that in a case where the record of the judgment is silent on the point, the original contract may be shown, notwithstanding the merger, to determine the extent of the remedy provided by the law for its enforcement; but that is not admissible where, as in this case, the matter has been adjudged in the original action. . . By the terms of the judgment in favor of the relator, it was determined that the bonds sued on were issued under the authority of a statute which prescribed no limit to the rate of taxation for their payment. In such cases, the law which authorizes the issue of the bonds gives also the means of payment by taxation. The findings in the judgment on that point are conclusive."

[504]

But there the power to issue the bonds was not questioned. The controversy was as to the rate of taxation, depending upon which Act they were issued under. If the original contract could have been resorted to, the decision might have been otherwise as to the rate; but it was held that that could not be done, because, from the averments which formed part of the complete judgment record, it appeared that the bonds were issued under one Act rather than the other, while each of the Acts fully authorized the issue and gave the power to tax to pay. But in the case at bar it appeared from the judgment records, or if not, from relator's petition, that the bonds were issued under an abrogated statute, and were consequently void, and that the respondents possessed no power to tax to pay them, because that power was given only by the statute which had so ceased to exist.

[505]

The power invoked is not the power to tax to pay judgments, but the power to tax to pay bonds, considered as distinct and independent, and therefore, when the relator is obliged to go behind his judgments as money judgments merely, to obtain the remedy pertaining to the bonds, the court cannot decline to take cognizance of the fact that the bonds are utterly void and that no such remedy exists. *Res judicata* may render straight that which is crooked, and black that which is white, *Facit excurvo rectum, ex albo nigrum; Jeter* v. *Hewitt*, 63 U. S. 22 How. 352, 364 [16:345, 348]; but where application is made to collect judgments by process not contained in themselves, and requiring, to be sustained, reference to the alleged cause of action upon which they are founded, the aid of the court should not be granted when upon the face of the record it appears, not that mere error supervened in the rendition of such judgments, but that they rest upon no cause of action whatever.

The judgment is reversed and the cause remanded with a direction to dismiss the petition.

G. W. NORTON ET AL., *Plffs. in Err.*, [505]
v.
THE BOARD OF COMMISSIONERS OF THE TAXING DISTRICT OF THE CITY OF BROWNSVILLE.

(See S. C. Reporter's ed. 505, 506.)

Want of jurisdiction—filing of record.

Where the writ of error was brought December 28, 1886, and the citation was returnable to the October Term 1887 and served in January and March of the latter year, but the record was not filed until December 20, 1888, this court has no jurisdiction of the case.

[No. 1455.]

Submitted Jan. 4, 1889. Decided March 5, 1889.

IN ERROR to the Circuit Court of the United States for the Western District of Tennessee, to review a judgment against plaintiffs in error. *Dismissed.*

Messrs. **Sparrel Hill, Henry Craft** and **L. P. Cooper** for plaintiffs in error.

Messrs. **W. W. Rutledge** and **Wm. M. Smith** for defendant in error.

Mr. Chief Justice **Fuller** delivered the opinion of the court: [506]

Judgment was rendered against the plaintiffs in error in the Circuit Court of the United States for the Western District of Tennessee on the 29th of November, 1886, and writ of error brought December 28, 1886, accompanied by a citation to the adverse party, duly returnable to the October Term, 1887, and served in January and March of the latter year. But the record was not filed herein until December 20, 1888,

and the rule is settled that under such circumstances we do not entertain jurisdiction. *Grigsby* v. *Purcell*, 99 U. S. 505 [25:354]; *Credit Co.* v. *Ark. Cent. R. Co.* 128 U. S. 258 [*ante*, 448]; *Hill* v. *Chicago & E. R. Co.* January 21, 1889 [*ante*, 651]; *Edmonson* v. *Bloomshire*, 74 U. S. 7 Wall. 306 [19:91].

The writ of error is dismissed.

---

[470]

UNITED STATES, *ex rel.* MARY ELIZABETH LEVEY, *Plff. in Err.*,

v.

STROTHER M. STOCKSLAGER, Commissioner of the General Land Office.

(See S. C. Reporters' ed. 470-478.)

Act for relief of heirs of John Bouligny—vested right—joint resolution—deprivation of property without due process—jurisdiction of Supreme Court of District of Columbia.

1. The Joint Resolution of Congress, approved March 30, 1867, directing the suspension of the execution of the law for the relief of the heirs of John Bouligny suspended the execution of such Act until the further Act of the Congress of the United States.

2. The Act of March 2, 1867, for the relief of said heirs, did not give the widow and children of Bouligny a vested right in the certificates of new location which were to be issued.

3. Inasmuch as nothing had been done by the officers of the land department under the Act of March 2, 1867, and no certificates had been made out, and the whole matter still remained executory, no vested right had attached at the time of the approval of the joint resolution.

4. Therefore, that resolution did not deprive the widow and children of any property or right of property in violation of the Constitution.

5. No jurisdiction is given to the Supreme Court of the District of Columbia of a suit against the United States or a public officer for the specific performance of a contract made by the United States.

[No. 1481.]

Argued Jan. 24, 25, 1889. Decided Mar. 5, 1889.

IN ERROR to the Supreme Court of the District of Columbia, to reveiw a judgment dismissing a petition for a writ of mandamus to require the Commissioner of the General Land Office to execute and deliver certificates of location of land. *Affirmed.*

The facts are stated in the opinion.

Messrs. **Walter H. Smith**, *A. T. Britton*, **A. B. Browne** and *S. W. Johnston*, for plaintiff in error:

The Act gave the widow and minor children a vested right in the scrip.

Fletcher v. *Peck*, 10 U. S. 6 Cranch, 87 (3: 162); *Dartmouth College* v. *Woodward*, 17 U. S. 4 Wheat. 518 (4: 629); *McGee* v. *Mathis*, 71 U. S. 4 Wall. 143 (18: 314); Cooley, Const. Lim. 332; 2 Pars. Cont. 527; *U. S.* v. *Schurz*, 102 U. S. 399 (26: 172).

The right thus secured was property and could not be abridged without due process of law.

Sinking Fund Cases, 99 U. S. 733 (25: 506); *Smith* v. *U. S.* 35 U. S. 10 Pet. 329 (9: 442); *Bryan* v. *Kennett*, 113 U. S. 192 (28: 913); *Murray* v. *Hoboken Land & I. Co.* 59 U. S. 18 How. 276 (15: 374); *Walker* v. *Sauvinet*, 92 U. S. 92 (23: 679); *Kennard* v. *La.* 92 U. S. 481 (23:479); *Davidson* v. *N. O.* 96 U. S. 105 (24: 620); *Hurtado* v. *Cal.* 110 U. S. 535 (28: 238); *Hagar* v. *Reclamation Dist.* 111 U. S. 708 (28: 572).

Due process of law includes a trial or hearing according to some settled course of judicial proceedings.

Hoke v. *Henderson*, 4 Dev. (N. C.) 15; *Taylor* v. *Porter*, 4 Hill, 146; *Vanzant* v. *Waddel*, 2 Yerg. 260; *State Bank* v. *Cooper*, 2 Yerg. 599; *Jones* v. *Perry*, 10 Yerg. 59; *Wynehamer* v. *People*, 13 N. Y. 378; *Norman* v. *Heist*, 5 Watts & S. 171; *Bates* v. *Dist. of Columbia*, 1 MacArth. 433.

The joint resolution was unconstitutional and void.

Hamilton's Works, Vol. 3, 518; *Com.* v. *New Bedford Bridge*, 2 Gray, 350; *Calder* v. *Bull*, 3 U. S. 3 Dall. 388 (1: 648); *Ogden* v. *Saunders*, 25 U. S. 12 Wheat. 213 (6: 606); *Wilkinson* v. *Leland*, 27 U. S. 2 Pet. 657 (7: 542); *Sinking Fund Cases*, 99 U. S. 718 (25: 501; *Green* v. *Biddle*, 21 U. S. 8 Wheat. 92 (5: 547); *Bronson* v. *Kinzie*, 42 U. S. 1 How. 311 (11: 143); *McCracken* v. *Hayward*, 43 U. S. 2 How. 608 (11: 397); *Planters Bank* v. *Sharp*, 47 U. S. 6 How. 327 (12: 447); *Von Hoffman* v. *Quincy*, 71 U. S. 4 Wall. 535 (18: 403); *Walker* v. *Whitehead*, 83 U. S. 16 Wall. 314 (21: 357); *Terry* v. *Anderson*, 95 U. S. 628 (24:365); *Tenn.* v. *Sneed*, 96 U. S. 69 (24: 610); *La.* v. *Pilsbury*, 105 U. S. 301 (26: 1098); *Fisk* v. *Jefferson Police Jury*, 116 U. S. 131 (29: 587); *Seibert* v. *Lewis*, 122 U. S. 284 (30: 1161); *Terrett* v. *Taylor*, 13 U. S. 9 Cranch, 43 (3: 650); *Rice* v. *Minnesota & N. W. R. Co.* 66 U. S. 1 Black, 358 (17: 147); *Osborn* v. *Bank of U. S.* 22 U. S. 9 Wheat. 738 (6:204); *Board of Liquidation* v. *McComb*, 92 U. S. 541 (23: 628); *Va. Coupon Cases*, 114 U. S. 293 (29: 193); *Norton* v. *Shelby Co.* 118 U. S. 442 (30: 186).

Messrs. A. H. Garland, Atty-Gen., and **Heber J. May**, *Assist. Atty.*, for defendant in error.

Mr. Justice **Blatchford** delivered the opinion of the court: [471]

This is a writ of error to review a judgment of the Supreme Court of the District of Columbia, in general term. The writ is brought by the United States, on the relation of Mary Elizabeth Levey, intermarried with George Collins Levey, against Strother M. Stockslager, Commissioner of the General Land Office.

Mary Elizabeth Levey filed a petition in the Supreme Court of the District of Columbia, praying for a writ of mandamus. The petition set forth that the petitioner was formerly Mary Elizabeth Bouligny, the widow of John E. Bouligny, deceased, and the person named in the Act of Congress of March 2, 1867, hereinafter set forth; and that she is now the wife of George Collins Levey, and was such on the 29th of March, 1888. The Act of Congress referred to (c. 208, 14 Stat. at. L. 635) was set forth in the petition, and is in these words: [472]

"*An Act for the relief of the heirs of John E. Bouligny.*

"*Be it enacted, by the Senate and House of Representatives of the United States of America in Congress assembled*, That there be, and hereby is, confirmed to Mary Elizabeth Bouligny, Corrinne Bouligny, and Felice Bouligny, widow and children of John E. Bouligny, deceased, the one sixth part of the land claim of Jean

Antoine Bernard D'Autrive, in the State of Louisiana, said one sixth part amounting to seventy-five thousand eight hundred and forty acres; and that, inasmuch as the said land embraced in said claim *have* [has] been already appropriated by the United States to other purposes, certificates of new location, in eighty-acre lots, be issued to the said Mary Elizabeth Bouligny, for her own benefit and that of her said minor children, in lieu of said lands, to be located at any land office in the United States, upon any public lands subject to private entry at a price not exceeding one dollar and twenty-five cents per acre. The Commissioner of the General Land Office is hereby directed to issue said certificates of new location, in accordance with existing regulations in such cases.

"APPROVED, March 2, 1867."

The petition set forth, that, on the 6th of March, 1867, the petitioner's attorney filed with the Commissioner of the General Land Office a certified copy of said Act, and requested that the certificates of new location named in the Act be issued; that the Act was passed by the Thirty-Ninth Congress, which adjourned on the 3d of March, 1867; that, at the next session of Congress, being the Fortieth Congress, the latter Congress, on the 30th of March 1867, passed the following joint resolution (No. 35, 15 Stat. at. L. 353):

"*Joint Resolution, directing, the Secretary of the Interior to suspend the execution of a Law passed by the Thirty-Ninth Congress for the Relief of the Heirs of John E. Bouligny.*

"*Be it resolved, by the Senate and House of Representatives of the United States of America in Congress assembled,* That the Secretary of the Interior be directed to suspend the execution of the Act entitled 'An Act for the Relief of the Heirs of John E. Bouligny,' approved March second, eighteen hundred and sixty-seven, until the further order of Congress.

"APPROVED, March 30, 1867;"

that Congress had made no "further order" in the matter; that the defendant was, on the 29th of March, 1888, and since had been, and now is, Commissioner of the General Land Office of the United States; that the petitioner, on that day, demanded of him, as such commissioner, that he issue to her, for her own benefit and that of her minor children named in the Act, certificates of new location for 75,840 acres, in eighty-acre lots, locatable at any land office in the United States, upon any public lands subject to private entry at a price not exceeding $1.25 per acre; that such demand was made in writing, at the office of the said commissioner, in Washington; that he, on the 12th of April, 1888, refused to grant that request; that on the 13th of April, 1888, she duly appealed from the decision and refusal of the commissioner to the Secretary of the Interior; that the said secretary, on the 3d of May, 1888, approved the decision of the commissioner; and that she had theretofore repeatedly made application to the Commissioners of the General Land Office to issue said certificates of new location, and always met with a refusal to issue them.

The petition prayed that a writ of mandamus might issue to the said commissioner, directing him to execute and deliver such certificates to her.

On an order to show cause, returnable in the general term of the court, the respondent put in an answer, setting forth that no action had been taken by the General Land Office for the purpose of carrying out and giving effect to the provisions of the Act of March 2, 1867, prior to the passage of the Joint Resolution of March 30, 1867, that, by the passage of such joint resolution, the power of the respondent to issue the certificates was suspended until the further order of Congress; that Congress had made no further order; that the Act of March 2, 1867, did not give to the relator or to the heirs of John E. Bouligny a vested right to the certificates; that, as the Act of March 2, 1867, directed the Commissioner to issue the certificates "in accordance with existing regulations in such cases," it would have imposed upon the respondent the exercise of an official duty, within his discretion, and not reviewable by the court; that such official duty is not a ministerial duty; that, if the relator had acquired a vested right to the certificates under the Act, a remedy was afforded in the Court of Claims, under section 1059, to recover their value, provided the petition setting forth the claim had been presented to the court within six years after the claim first accrued; and that the petition ought to be dismissed.

The relator put in a demurrer to the answer, on the ground that it did not set up any legal defense; that the remedy in the Court of Claims, suggested by the answer, did not exist in law; that the right in the certificates, given by the Act of Congress, was a vested right, which could not be and was not taken away by the joint resolution; and that the joint resolution was unconstitutional and void.

The court in general term overruled the demurrer, and, the relator electing to stand upon it, a judgment was entered, discharging the rule to show cause and dismissing the petition.

An opinion was delivered by the court in general term. It held that the Act of March 2, 1867, was not a grant, and nothing passed by it; that the Louisiana lands named in it were never possessed by the confirmees, and were not to be possessed by them; that under such circumstances there could be no confirmation in regard to them; that the provision for certificates in lieu of them was not a grant, and nothing passed by it, because it was wholly executory; that, the certificates never having been prepared or come into existence, the effect of the joint resolution could, at most, only be to impair the obligation of a contract, and was not the taking of private property; that the contract supposed to exist by virtue of the Act of March 2, 1867, could not be enforced either by the Executive or the courts, until the United States should grant permission for such enforcement, nor after such permission had been withdrawn; that the power to perform the contract, and the right to insist upon its performance, existed only while such permission existed; that the relief sought by the relator amounted to a specific performance of the alleged contract of the United States, by one of its officers; that this could not be enforced when the United States had withdrawn its consent; that a writ of mandamus to compel the performance of an official act by a public officer could not be employed to enforce the specific performance by the

United States of a contract; and that the respondent had no official duty or power in the premises since the passage of the joint resolution.

The principal question argued at the bar was as to the effect of the joint resolution in suspending the execution of the prior Act. There is nothing in the suggestion of the relator that the joint resolution intended only a suspension of the execution of the Act during the existence of the Fortieth Congress, and until that Congress should further order. We do not think that such is the proper construction of the joint resolution. It suspends the execution of the Act "until the further order of Congress," that is, until the further order of the legislative body called, in section 1 of article 1 of the Constitution, "a Congress of the United States," consisting of a Senate and House of Representatives, in which are declared to be vested all legislative powers granted by the Constitution. The joint resolution was one of the character mentioned in section 7 of article 1 of the Constitution, to which the concurrence of the Senate and House of Representatives was necessary, and which was approved by the President, and took effect only on such approval. It had all the characteristics and effects of the Act of March 2, 1867, which became a law by the approval of the President. Until Congress should further order, the operation of the Act of March 2, 1867, was by the joint resolution effectually suspended.

The present case is not at all like the cases of which *Morrow* v. *Whitney*, 95 U. S. 551 [24: 456], and *Whitney* v. *Morrow*, 112 U. S. 693 [28: 871], are a type. The statute involved in that case was the Act of February 21, 1823 (c. 10, 3 Stat. at L. 724), in reference to land claims in the Territory of Michigan. The third section of that Act directed that patents should be issued to persons whose claims to land had been [476] regularly filed with the commissioners appointed under the Act of May 11, 1820 (c. 85, 3 Stat. L. 572), and whose claims had been favorably reported on by said commissioners; and the statute confirmed such persons in their claims. That was a statute confirming to persons claims to specific lands, and the patents were to issue for those very lands. The principle established by the decisions of this court in regard to such cases is one always to be adhered to. We do not depart from it in the present case, but only hold that it is not applicable here. The principle thus applied in *Morrow* v. *Whitney*, *supra*, is, that an Act of Congress recognizing the validity of the claim of an individual to specific land, as against the United States, operates to transfer to him the interest of the United States, as effectually as a grant could have done; and, where such individual has the possession of the land, or some estate in it, and the United States still hold the legal title to it, confirmation is substantially a conveyance of an estate or right in the land by the United States to such individual; and, where the land has boundaries which are clearly defined, or are capable of identification, such confirmation perfects the claimant's title to the very land, without the issuing of any patent therefor. But this doctrine necessarily applies only to a case where the United States intend, by the statute, to transfer to, and vest in, the beneficiary, a title to specific land. The present is not such a case. What is stated by the Act of March 2, 1867, to be confirmed is "the one sixth part of the land claim" mentioned, said one sixth amounting to 75,840 acres; but the statute states that the land embraced in the claim has "been already appropriated by the United States to other purposes." Therefore, the beneficiaries could acquire no title to it from the United States. The Act then proceeds to provide for the issuing of certificates of new location, not covering any part of the 75,840 acres which had been already appropriated by the United States to other purposes, nor covering any specific public lands. The new lands were to be "in lieu" of the lands lost, and were to be selected and located at some land office and upon public lands which were subject to private entry, and were so subject at a price not exceeding $1.25 per acre; [477] and the certificates were to be issued by the Commissioner of the General Land Office "in accordance with existing regulations in such cases."

Nor did the Act of March 2, 1867, give to the widow and children of Bouligny a vested right in the certificates of new location which were to be issued. No certificates were prepared for issue; no step was taken by the Commissioner of the General Land Office towards issuing them; no new lands were selected or located; and the whole thing remained *in fieri*, and subject to the control of Congress.

The cases cited by the counsel for the relator, of *Fletcher* v. *Peck*, 10 U. S. 6 Cranch, 87 [3: 162]; *Dartmouth College* v. *Woodward*, 17 U. S. 4 Wheat. 518 [4: 629]; *McGee* v. *Mathis*, 71 U. S. 4 Wall. 143 [18: 314]; and *United States* v. *Schurz*, 102 U. S. 378 [26: 167], do not apply to the present case. There was here no contract between the United States and the widow and children of Bouligny, in the sense of the cases referred to. In *Fletcher* v. *Peck*, a tract of land had been sold by the Governor of Georgia under the authority of an Act of the Legislature, to persons who had conveyed it to purchasers for a valuable consideration without notice. It was held that a subsequent Legislature could not afterwards repeal the Act on the ground that it had been passed through bribery. In *Dartmouth College* v. *Woodward*, it was held that a charter granted to a private corporation was a contract. In *McGee* v. *Mathis*, it was held that a direct grant of land by the United States to a State was a contract; and in that case the scrip had been issued by the State, and was in the hands of the person entitled to receive it, and for that reason it was held that it represented land, and that the Act under which it had been issued could not be repealed by the State. In *United States* v. *Schurz*, a patent for land had been signed, sealed, perfected, and recorded, and the power of the land department over it had ceased, so that a writ of mandamus to the Secretary of the Interior, to deliver it to the person in whose favor it had been made out, would lie.

It is also contended for the relator, that she acquired under the Act of March 2, 1867, a right which amounted to property, and of which she could not be deprived by the United States under the joint resolution, because that [478]

was not due process of law. But we are of opinion that the cases cited on that subject by the relator are not applicable. Inasmuch as nothing had been done by the officers of the land department under the Act of March 2, 1867, and no certificates had been made out, and the whole matter still remained executory, no vested right had attached at the time of the approval of the joint resolution. Therefore, that resolution did not deprive the widow and children of any property, or right of property, in violation of the Constitution. The transaction was merely the ordinary one of a direction by statute to a public officer to perform a certain duty, and a subsequent direction to him by statute, before he had performed that duty or had entered upon its performance, not to perform it. *Williams* v. *Lincoln Co.* 35 Maine, 345; *Butler* v. *Palmer*, 1 Hill, 324; *Hampton* v. *Com.* 19 Pa. 329; Sedgwick, Stat. & Const. Law, Pomeroy's notes, 2d ed. 112.

But if the contention of the relator, that the provisions of the Act of March 2, 1867, amounted to a contract between the United States and the widow and children, were correct, that very fact would show that the relief here sought could not be granted to the relator. She prays for a writ of mandamus against the Commissioner of the General Land Office, to issue and deliver to her the certificates of new location; but in case her claim were in fact founded on contract, her demand for relief would substantially amount to a prayer that the United States be decreed specifically to perform the contract. No jurisdiction is given by any statute to the Supreme Court of the District of Columbia of a suit against the United States or a public officer for the specific performance of a contract made by the United States.

On the whole case, we are of opinion that *the judgment of the Court below, in general term, must be affirmed.*

---

[397] THE LIVERPOOL AND GREAT WESTERN STEAM COMPANY (Limited), *Appt.*,

v.

THE PHENIX INSURANCE COMPANY.

(See S. C., *The Montana*, Reporter's ed. 397-464.)

*Jurisdiction—owner of ship is common carrier—loss by stranding—exception in bill of lading—does not exempt carrier from liability for negligence of master or crew—stipulation against responsibility for negligence of servants is void—when this court not bound by state decisions—maritime law—foreign law—*lex loci*—contract of affreightment—place of delivery—American contract—right of insurer to be subrogated on paying loss—stipulation that carrier may have benefit of insurance.*

1. The jurisdiction of this court to review the decree of the circuit court is limited to questions of law, and does not extend to questions of fact.
2. The owner of a general ship, carrying goods for hire in internal, coasting or foreign commerce, is a common carrier with the liability of an insurer against losses, except from irresistible causes—as the act of God and public enemies.
3. Collision or stranding is a peril of the seas; and a policy of insurance against perils of the seas covers a loss by stranding or collision, although arising from the negligence of the master or crew.
4. An exception in the bill of lading of perils of the sea or other specified perils, does not exempt the carrier from liability for loss or damage from one of those perils, to which the negligence of himself or his servants has contributed.
5. The clause in a bill of lading that appellant should not be responsible for loss or damage by the perils of the sea, arising from negligence of the master and crew of the ship, did not relieve him from such responsibility.
6. An express stipulation by any common carrier for hire, in a contract of carriage, that he shall be exempt from liability for losses caused by the negligence of himself or his servants, is unreasonable and contrary to public policy, and consequently void.
7. On this subject, as on any question depending upon mercantile law and not upon local statute or usage, the Courts of the United States are not bound by decisions of the courts of the State.
8. The general maritime law is in force in this country so far only as it has been adopted by the laws or usages thereof; and no rule of the general maritime law (if any exists) concerning the validity of such a stipulation as that mentioned, has ever been adopted in the United States or in England.
9. The courts of one country cannot take cognizance of the law of another without plea and proof.
10. The nature, the obligation and the interpretation of a contract are to be governed by the law of the place where it is made, unless the parties at the time of making it have some other law in view.
11. A contract of affreightment, made in one country between citizens or residents thereof, and the performance of which begins there, must be governed by the law of that country unless the parties, when entering into the contract, clearly manifest a mutual intention that it shall be governed by the law of some other country.
12. That the goods were to be delivered at Liverpool, and the freight and primage were payable there in sterling currency, do not make the contract an English contract, or refer to the English law the question of the liability of the carrier for the negligence of the master and crew in the course of the voyage.
13. Each of the bills of lading in this case is an American and not an English contract, and, so far as concerns the obligation to carry the goods in safety, is to be governed by the American law, and not by the law, municipal or maritime, of any other country. That the vessel was stranded on the coast of Great Britain is immaterial.
14. The insurer, upon paying to the assured the amount of a loss, total or partial, of the goods insured, becomes, without any formal assignment or any express stipulation to that effect in the policy, subrogated in a corresponding amount to the assured's right of action against the carrier, or other person responsible for the loss, and in a court of admiralty may assert in his own name that right of the shipper.
15. A stipulation in a bill of lading that a carrier, when liable for a loss of the goods, shall have the benefit of any insurance that may have been effected upon them, is valid and limits the right of an insurer of the goods, upon paying the loss, to recover over against the carrier; but a carrier setting up such a defense must show clearly that the insurance on the goods is one to the benefit of which by the terms of his contract he is entitled.

[No. 5.]

Argued Nov. 8, 9, 1887. Decided March 5, 1889.

APPEAL from a decree of the Circuit Court of the United States for the Eastern District of New York, against the appellant, a steamship company, upon a libel in admiralty by an insurance company to be subrogated to the rights of owners of goods shipped on appellant's steamship and lost or damaged by stranding by reason of the negligence of her master and officers. *Affirmed.*

See *S. C.* below, 22 Blatchf. 372.

The facts are stated in the opinion.

Messrs. **Franklin A. Wilcox** and **Stephen P. Nash**, for appellant:

The steamship owner had the right to limit or exempt himself from liability by contract for loss or damage to cargo caused by error of judgment or neglect of the master or mariners of the vessel on a foreign voyage.

Mynard v. *Syracuse B. & N. Y. R. Co.* 71 N. Y. 184; *Spinetti* v. *Atlas Steamship Co.* 80 N. Y. 71; *Maving* v. *Todd*, 1 Stark. 72; *Leeson* v. *Holt*, 1 Stark. 186; *York, N. & B. R. Co.* v. *Crisp*, 14 C. B. 527; *Taubman* v. *Pacific Steam Nav. Co.* 26 L. T. N. S. 704; *The Duero*, L. R. 2 Adm. & Eccl. 396.

The principle decided by *New York Central Railroad Company* v. *Lockwood*, 84 U. S. 17 Wall. 357 (21: 627), has never been applied to transportation by vessels or steamboats.

Perkins v. *New York Cent. R. Co.* 24 N. Y. 196, 203, 216; *N. J. Steam Nav. Co.* v. *Merchants Bank*, 47 U. S. 6 How. 344 (12: 465); *Copeland* v. *New Eng. M. Ins. Co.* 2 Met. 440; *Dixon* v. *Sadler*, 5 Mees. & W. 405; *Mercantile Mut. Ins. Co.* v. *Calebs*, 20 N. Y. 173; *Phœnix Ins. Co.* v. *Erie & W. Transp. Co.* 117 U. S. 312 (29: 873); *Dorr* v. *N. J. Steam Nav. Co.* 4 Sandf. 136-146, 11 N. Y. 492; *Smith* v. *N. Y. Cent. R. Co.* 24 N. Y. 222; *Carr* v. *Lancashire & Y. R. Co.* 14 Eng. L. & Eq. 340; *Bissell* v. *New York Cent. R. Co.* 25 N. Y. 461; *Moore* v. *Evans*, 14 Barb. 524; *Gould* v. *Hill*, 2 Hill, 623.

The ship carrier, in respect to cargo, cannot be properly classed with a railway carrier so as to preclude him from making a valid contract relieving him from risk of loss by neglect of the master and mariners.

Perkins v. *New York Cent. R. Co.* 24 N. Y. 196, 216.

The libelants, being presumed to have knowledge of the clauses in the bills of lading, are equitably estopped.

Phœnix Ins. Co. v. *Erie & W. Transp. Co.* 117 U. S. 312 (29: 873); *Copeland* v. *New Eng. M. Ins. Co.* 2 Met. 442; Pars. Marine Ins. 14, 18.

It appearing that, by the provisions of certain bills of lading of the cargo in question, the carrier should have the benefit of any insurance that might have been effected upon or for account of said goods, the libelants cannot recover for such loss.

Lamb v. *Camden & A. R. & T. Co.* 46 N. Y. 290; *Ætna Ins. Co.* v. *Wheeler*, 49 N. Y. 616; *Babcock* v. *Lake Shore & M. S. R. Co.* 49 N. Y. 491; *Whitworth* v. *Erie R. Co.* 87 N. Y. 413.

A common carrier can limit his liability by contract, even for gross negligence.

Mynard v. *Syracuse, B. & N. Y. R. Co.* 7 Hun, 399; *Cragin* v. *N. Y. Cent. R. Co.* 51 N. Y. 61; *Lyon* v. *Mells*, 5 East, 428; *Nicholson* v. *Willan*, 5 East, 507; *Coggs* v. *Bernard*, 2 Ld. Raym. 909, 919; *Hart* v. *Pennsylvania R. Co.* 112 U. S. 331 (28: 717).

The decisions of France, Germany and Holland fully support our contention.

The rights of the parties under the bills of lading are to be governed by the law of Great Britain and the general maritime law.

Pope v. *Nickerson*, 3 Story, 465; *Lloyd* v. *Guibert*, 33 L. J. N. S. Q. B. 241, 10 Jur. N. S. 949; *The M. Moxham*, L. R. 1 Prob. Div. 43; *Pritchard* v. *Norton*, 106 U. S. 124 (27: 104); 5 Mor. Tr. 116; *Ky.* v. *Bassford*, 6 Hill, 526; *Wayman* v. *Southard*, 23 U. S. 10 Wheat. 48 (6: 253); Phillimore, International Law, 469; *The Scotland*, 105 U. S. 24 (26: 1001); Story, Confl. Laws, 386.

Mr. **William Allen Butler,** for appellee:

The facts, as found, sustain the conclusion of law that the stranding and the resulting loss and damage were due to the negligence of the master and officers.

The Abbotsford, 98 U. S. 440 (25: 168); *The Benefactor*, 102 U. S. 214 (26: 157); *The Adriatic*, 103 U. S. 730 (26: 605); *The Annie Lindsley*, 104 U. S. 187 (26: 717); *Merchants Ins. Co.* v. *Allen*, 121 U. S. 67 (30: 858).

The respondent below, a foreign corporation, chose voluntarily to appear, and could not object to the jurisdiction.

Shields v. *Thomas*, 59 U. S. 18 How. 253 (15: 368); *McCormick* v. *Pa. Cent. R. Co.* 49 N. Y. 303; *Pennoyer* v. *Neff*, 95 U. S. 714 (24: 565); *Nat. Furnace Co.* v. *Moline M. Iron Works*, 18 Fed. Rep. 863; *New Orleans* v. *Houston*, 119 U. S. 265 (30: 411).

Unless duly pleaded and proved, the law of a foreign country cannot be availed of as a defense.

Monroe v. *Douglass*, 5 N. Y. 447; *Hull* v. *Mitcheson*, 64 N. Y. 639; *Chapin* v. *Dobson*, 78 N. Y. 74, 79; *The Scotland*, 105 U. S. 24, 29 (26: 1001, 1003).

The law of a foreign country must be proved.

Ennis v. *Smith*, 55 U. S. 14 How. 400 (14:472); *Pierce* v. *Indseth*, 106 U. S. 546 (27:254).

The *lex fori* must govern.

Pope v. *Nickerson*, 3 Story, 465; *Lloyd* v. *Guibert*, 6 Best & S. 100; *The Woodland*, 14 Blatchf. 499; Story, Confl. Laws, 242, 280.

Where the negligence of a carrier or his servants is the direct cause of loss or damage to the goods in his charge for transportation, he is liable in damages, notwithstanding any stipulation in the contract of affreightment exempting him from such liability. Such a stipulation is unreasonable and contrary to public policy, and therefore void.

N. J. Steam Nav. Co. v. *Merchants Bank*, 47 U. S. 6 How. 344, 383 (12:465); *Mich. Cent. R. Co.* v. *Mineral Springs Mfg. Co.* 83 U. S. 16 Wall. 318 (21:297); *New York Cent. R. Co.* v. *Lockwood*, 84 U. S. 17 Wall. 357 (21:627); *Ogdensburgh & L. C. R. Co.* v. *Pratt*, 89 U. S. 22 Wall. 123, 134 (22:827, 831); *Bank of Ky.* v. *Adams Exp. Co.* 93 U. S. 174 (23:872); *Grand Trunk R. Co.* v. *Stevens*, 95 U. S. 655 (24:535); *Phœnix Ins. Co.* v. *Erie & W. Transp. Co.* 117 U. S. 312, 322 (29:873, 878); *York Mfg. Co.* v. *Ill. Cent. R. Co.* 70 U. S. 3 Wall. 107 (18:170); *Southern Exp. Co.* v. *Caldwell*, 88 U. S. 21 Wall. 264 (22:556).

The distinction attempted to be made between the liability of land carriers and ocean carriers is untenable.

1 Pars. Maritime Law, 173; Angell, Carriers, § 89; *Nugent* v. *Smith*, L. R. 1 C. P. Div. 423.

The rule as established by this court has been repeatedly applied in the circuit and district courts to contracts of affreightment by owners of vessels.

The City of Norwich, 3 Ben. 575; *Nelson* v. *Nat. Steamship Co.* 7 Ben. 341; *The Colon*, 9 Ben. 354; *Unnevehr* v. *The Hindoo*, 1 Fed. Rep. 627; *May* v. *The Powhatan*, 5 Fed. Rep. 376; *S. C.* 12 Fed. Rep. 876; *Sun Mut. Ins. Co.* v. *Miss. Valley Transp. Co.* 14 Fed. Rep. 699;

The Hadji, 22 Blatchf. 235; *The Brantford City*, 29 Fed. Rep. 373.

Stipulations in the bill of lading are subject to the provisions of the statutes governing the contracting parties and to the rules of commercial law applicable to the contract.

Walker v. *Western Transp. Co.* 70 U. S. 3 Wall. 150, 152 (18:172, 173); *Moore* v. *Am. Transp. Co.* 65 U. S. 24 How. 1 (16:674); *Norwich & N. Y. Transp. Co.* v. *Wright*, 80 U. S. 13 Wall. 104 (20:585); *The Benefactor*, 103 U. S. 239 (26:351); *Phœnix Ins. Co.* v. *Erie & W. Transp. Co.* 117 U. S. 312 (20:873).

What constitutes a contract of carriage is not a question of local law. It is a matter of general law, upon which this court will exercise its own judgment.

Chicago v. *Robbins*, 67 U. S. 2 Black, 418 (17:298); *Brooklyn City & N. R. Co.* v. *Nat. Bank of the Republic*, 102 U. S. 14 (26:61); *Hough* v. *Texas & P. R. Co.* 100 U. S. 213 (25:612); *Myrick* v. *Mich. Cent. R. Co.* 107 U. S. 102 (27:325).

The libelants were subrogated to the rights of the insured against the carrier for the loss and damage to the cargo insured by them.

Phillips, Ins. § 1723; *Home Ins. Co.* v. *West. Transp. Co.* 4 Robt. 257; *Hall* v. *Nashville & C. R. Co.* 80 U. S. 13 Wall. 367, 370, 373 (20: 594-597); *The Potomac*, 105 U. S. 630 (26:1194); *Mobile & M. R. Co.* v. *Jurey*, 111 U. S. 584 (28: 527); *Phœnix Ins. Co.* v. *Erie & W. Transp. Co.* 117 U. S. 312, 320 (29:873, 878).

And in admiralty the suit is properly maintained by the underwriter in his own name.

The Monticello v. *Mollison*, 58 U. S. 17 How. 152 (15:68); *Garrison* v. *Memphis Ins. Co.* 60 U. S. 19 How. 312, 317 (15:656, 658); *The Frank G. Fowler*, 8 Fed. Rep. 360; *Dunham* v. *New Eng. Mut. Ins. Co.* 1 Lowell, 253.

[435] *Mr. Justice* **Gray** delivered the opinion of the court:

This is an appeal by a steamship company from a decree rendered against it upon a libel in admiralty, "in a cause of action arising from breach of contract," brought by an insurance company, claiming to be subrogated to the rights of the owners of goods shipped on board The Montana, one of the appellant's steamships, at New York, to be carried to Liverpool, and lost or damaged by her stranding, because of the negligence of her master and officers, in Holyhead Bay on the coast of Wales, before reaching her destination.

In behalf of the appellant, it was contended that the loss was caused by perils of the sea, without any negligence on the part of the master and officers; that the appellant was not a common carrier; that it was exempt from liability by the terms of the bills of lading; and that the libelant had not been subrogated to the rights of the owners of the goods.

It is to be remembered that the jurisdiction of this court to review the decree below is limited to questions of law, and does not extend to questions of fact. Act of February 16, 1875, c. 77, § 1; 18 Stat. at L. 315; *The Gazelle*, 128 U. S. 474, 484 [*ante*, 496, 499], and cases there cited.

In the findings of fact, the circuit court after stating, in much detail, the course of the ship's [436] voyage, the conduct of her master and officers, the position and character of the various lighthouses and other safeguards which she passed, and other attendant circumstances immediately preceding the stranding, distinctly finds as facts: "Those in charge of the navigation of The Montana were negligent, in that, without having taken cross bearings of the light at South Stack, and so determined their distance from the light, they took an east three-quarters south course before passing the Skerries, and without seeing the Skerries light; and in that they continued at full speed after hearing the fog-gun at North Stack; and in that they took a northeast by east magnetic course on hearing said fog-gun, instead of stopping and backing and taking a westerly course out of Holyhead Bay; and in that they did not ascertain their position in Holyhead Bay by means of the lights and fog-signals, or by the use of the lead, or by stopping until they should, by those means or otherwise, learn where their ship was."

"On the foregoing facts," the only conclusion of law stated by the circuit court (except those affecting the right of subrogation and the amount to be recovered) is in these words: "The stranding of The Montana and the consequent damage to her cargo having been the direct result of the negligence of the master and officers of the steamer, the respondent is liable therefor." Negligence is not here stated as a conclusion of law, but assumed as a fact already found. The conclusion of law is, in effect, that, such being the fact, the respondent is liable, notwithstanding any clause in the bills of lading.

The question of negligence is fully and satisfactorily discussed in the opinion of the district court, reported in 17 Fed. Rep. 377, and in that of the circuit court, reported in 22 Blatchford, 372. It is largely, if not wholly, a question of fact, the decision of which by the circuit court cannot be reviewed here; and so far as it can possibly be held to be or to involve a question of law, it is sufficient to say that the circumstances of the case, as found by the circuit court, clearly warrant, if they do not require, a court or jury, charged with the duty of determining issues of fact, to find that the stranding was owing to the negligence of the [437] officers of the ship.

The contention that the appellant is not a common carrier may also be shortly disposed of.

By the settled law, in the absence of some valid agreement to the contrary, the owner of a general ship, carrying goods for hire, whether employed in internal, in coasting, or in foreign commerce, is a common carrier, with the liability of an insurer against all losses, except only from such irresistible causes as the act of God and public enemies. Molloy, bk. 2, c. 2, § 2; Bac. Abr. *Carrier*. A; *Barclay* v. *Cucullay Gana*, 3 Doug. 389; 2 Kent, Com. 598, 599; Story, Bailm. § 501; *The Niagara* v. *Cordes*, 62 U. S. 21 How. 7, 23 [16: 41, 46]; *The Lady Pike*, 88 U. S. 21 Wall. 1, 14 [22:499, 503].

In the present case, the circuit court has found as facts: "The Montana was an ocean steamer, built of iron, and performed regular service as a common carrier of merchandise and passengers between the Ports of Liverpool, England, and New York, in the line commonly known as the Guion Line. By her, and by other ships in that line, the respondent was

such common carrier. On March 2, 1880, The Montana left the Port of New York, on one of her regular voyages, bound for Liverpool, England, with a full cargo, consisting of about twenty-four hundred tons of merchandise, and with passengers." The bills of lading, annexed to the answer and to the findings of fact, show that the four shipments in question amounted to less than one hundred and thirty tons, or hardly more than one twentieth part of the whole cargo. It is clear, therefore, upon this record, that the appellant is a common carrier, and liable as such, unless exempted by some clause in the bills of lading.

In each of the bills of lading, the excepted perils, for loss of damage from which it is stipulated that the appellant shall not be responsible, include "barratry of master or mariners," and all perils of the seas, rivers or navigation, described more particularly in one of the bills of lading as "collision, stranding or other peril of the seas, rivers or navigation, of whatever nature or kind soever, and howsoever such collision, stranding or other peril may be caused," and in the other three bills of lading described [438] more generally as any "accidents of the seas, rivers and steam navigation, of whatever nature or kind soever;" and each bill of lading adds, in the following words in the one, and in equivalent words in the others, "whether arising from the negligence, default, or error in judgment of the master, mariners, engineers or others of the crew, or otherwise howsoever."

If the bills of lading had not contained the clause last quoted, it is quite clear that the other clauses would not have relieved the appellant from liability for the damage to the goods from the stranding of the ship through the negligence of her officers. Collision or stranding is, doubtless, a peril of the seas; and a policy of insurance against perils of the seas covers a loss by stranding or collision, although arising from the negligence of the master or crew, because the insurer assumes to indemnify the assured against losses from particular perils, and the assured does not warrant that his servants shall use due care to avoid them. *General Mut. Ins. Co.* v. *Sherwood*, 55 U. S. 14 How. 351, 364, 365 [14:452]; *Orient Ins. Co.* v. *Adams*, 123 U. S. 67, 73 [31:63, 66]; *Copeland* v. *New Eng. M. Ins. Co.* 2 Met. 432, 448-450. But the ordinary contract of a carrier does involve an obligation on his part to use due care and skill in navigating the vessel and carrying the goods; and, as is everywhere held, an exception, in the bill of lading, of perils of the sea or other specified perils, does not excuse him from that obligation, or exempt him from liability for loss or damage from one of those perils, to which the negligence of himself or his servants has contributed. *N. J. Steam Nav. Co.* v. *Merchants Bank*, 47 U. S. 6 How. 344 [12:465]; *U. S. Exp. Co.* v. *Kountze*, 75 U. S. 8 Wall. 342 [19:457]; *Western Transp. Co.* v. *Downer*, 78 U. S. 11 Wall. 129 [20:160]; *Grill* v. *General Iron Screw Collier Co.* L. R. 1 C. P. 600, and L. R. 3 C. P. 476; *The Xantho*, L. R. 12 App. Cas. 503, 510, 515.

We are then brought to the consideration of the principal question in the case, namely: the validity and effect of that clause in each bill of lading by which the appellant undertook to exempt itself from all responsibility for loss or damage by perils of the sea, arising from negligence of the master and crew of the ship.

This question appears to us to be substantially determined by the judgment of this court in [439 *New York Cent. R. Co.* v. *Lockwood*, 84 U. S. 17 Wall. 357 [21:627].

That case, indeed, differed in its facts from the case at bar. It was an action brought against a railroad corporation by a drover who, while being carried with his cattle on one of its trains under an agreement which it had required him to sign, and by which he was to pay certain rates for the carriage of the cattle, to pass free himself, and to take the risks of all injuries to himself or to them, was injured by the negligence of the defendant or its servants.

The judgment for the plaintiff, however, was not rested upon the form of the agreement, or upon any difference between railroad corporations and other carriers, or between carriers by land and carriers by sea, or between carriers of passengers and carriers of goods, but upon the broad ground that no public carrier is permitted by law to stipulate for an exemption from the consequences of the negligence of himself or his servants.

The very question there at issue, defined at the beginning of the opinion as "whether a railroad company, carrying passengers for hire, can lawfully stipulate not to be answerable for their own or their servants' negligence in reference to such carriage," was stated a little further on in more general terms as "the question before propounded, namely: whether common carriers may excuse themselves from liability for negligence;" and a negative answer to the question thus stated was a necessary link in the logical chain of conclusions announced at the end of the opinion as constituting the *ratio decidendi*. 84 U. S. 17 Wall. 359, 363, 384 [21:634, 635, 642].

The course of reasoning, supported by elaborate argument and illustration, and by copious references to authorities, by which those conclusions were reached, may be summed up as follows:

By the common law of England and America before the Declaration of Independence, recognized by the weight of English authority for half a century afterwards, and upheld by decisions of the highest courts of many States of the Union, common carriers could not stip- [440 ulate for immunity for their own or their servants' negligence. The English Railway and Canal Traffic Act of 1854,* declaring void all notices and conditions made by those classes of common carriers, except such as should be held by the court or judge before whom the case should be tried to be just and reasonable, was substantially a return to the rule of the common law.

The only important modification by the Congress of the United States of the previously existing law on this subject is the Act of 1851 to limit the liability of ship owners (Act of March 3, 1851, c. 43; 9 Stat. at L. 635; R. S. §§ 4282-4289), and that Act leaves them liable without limit for their own negligence, and liable to the extent of the ship and freight for the negligence or misconduct of the master and crew.

The employment of a common carrier is a public one, charging him with the duty of ac-

*See 1 Inters. Com. Rep. 845, ¶ 7.

commodating the public in the line of his employment. A common carrier is such by virtue of his occupation, not by virtue of the responsibilities under which he rests. Even if the extent of those responsibilities is restricted by law or by contract, the nature of his occupation makes him a common carrier still. A common carrier may become a private carrier, or a bailee for hire, when, as a matter of accommodation or special engagement, he undertakes to carry something which it is not his business to carry. But when a carrier has a regularly established business for carrying all or certain articles, and especially if that carrier is a corporation created for the purpose of the carrying trade, and the carriage of the articles is embraced within the scope of its chartered powers, it is a common carrier; and a special contract about its responsibility does not devest it of that character.

The fundamental principle, upon which the law of common carriers was established, was to secure the utmost care and diligence in the performance of their duties. That end was effected in regard to goods, by charging the common carrier as an insurer, and in regard to passengers, by exacting the highest degree of carefulness and diligence. A carrier who stipulates not to be bound to the exercise of care and diligence seeks to put off the essential duties of his employment.

[441] Nor can those duties be waived in respect to his agents or servants, especially where the carrier is an artificial being, incapable of acting except by agents and servants. The law demands of the carrier carefulness and diligence in performing the service; not merely an abstract carefulness and diligence in proprietors and stockholders who take no active part in the business. To admit such a distinction in the law of common carriers, as the business is now carried on, would be subversive of the very object of the law.

The carrier and his customer do not stand upon a footing of equality. The individual customer has no real freedom of choice. He cannot afford to higgle or stand out, and seek redress in the courts. He prefers rather to accept any bill of lading, or to sign any paper, that the carrier presents; and in most cases he has no alternative but to do this, or to abandon his business.

Special contracts between the carrier and the customer, the terms of which are just and reasonable and not contrary to public policy, are upheld—such as those exempting the carrier from responsibility for losses happening from accident, or from dangers of navigation that no human skill or diligence can guard against; or for money or other valuable articles, liable to be stolen or damaged—unless informed of their character or value; or for perishable articles or live animals, when injured without default or negligence of the carrier. But the law does not allow a public carrier to abandon altogether his obligations to the public, and to stipulate for exemptions which are unreasonable and improper, amounting to an abnegation of the essential duties of his employment.

It being against the policy of the law to allow stipulations which will relieve the railroad company from the exercise of care or diligence, or which, in other words, will excuse it for negligence in the performance of its duty, the company remains liable for such negligence.

This analysis of the opinion in *Railroad Co.* v. *Lockwood* shows that it affirms and rests upon the doctrine that an express stipulation by any common carrier for hire, in a contract of carriage, that he shall be exempt from liability for losses caused by the negligence of himself or [442] his servants, is unreasonable and contrary to public policy, and consequently void. And such has always been the understanding of this court, expressed in several later cases. *Southern Exp. Co.* v. *Caldwell*, 88 U. S. 21 Wall. 264, 268 [22:556, 558]; *Ogdensburg & L. C. R. Co.* v. *Pratt*, 89 U. S. 22 Wall. 123, 134 [22:827, 831]; *Bank of Ky.* v. *Adams Exp. Co.* 93 U. S. 174, 188 [23:872, 876]; *Grand Trunk R. Co.* v. *Stevens*, 95 U. S. 655 [24:535]; *Hart* v. *Pa. R. Co.* 112 U. S. 331, 338 [28:717, 720]; *Phœnix Ins. Co.* v. *Erie & W. Transp. Co.* 117 U. S. 312, 322 [29:873, 878]; *Inman* v. *S. C. R. Co.* 129 U. S. 128 [*ante*, 612].

The general doctrine is nowhere stated more explicitly than in *Hart* v. *Pennsylvania R. Co.* and *Phœnix Ins. Co.* v. *Erie & W. Transp. Co.*, just cited; and there does not appear to us to be anything in the decision or opinion in either of those cases which supports the appellant's position.

In the one case, a contract fairly made between a railroad company and the owner of the goods, and signed by the latter, by which he was to pay a rate of freight based on the condition that the company assumed liability only to the extent of an agreed valuation of the goods, even in case of loss or damage by its negligence, was upheld as just and reasonable, because a proper and lawful mode of securing a due proportion between the amount for which the carrier might be responsible and the compensation which he received, and of protecting himself against extravagant or fanciful valuations —which is quite different from exempting himself from all responsibility whatever for the negligence of himself and his servants.

In the other, the decision was that, as a common carrier might lawfully obtain from a third person insurance on the goods carried against loss by the usual perils, though occasioned by negligence of the carrier's servants, a stipulation in a bill of lading that the carrier, when liable for the loss, should have the benefit of any insurance effected on the goods, was valid as between the carrier and the shipper, even when the negligence of the carrier's servants was the cause of the loss. Upholding an agreement by which the carrier receives the benefit of any insurance obtained by the shipper from a third person is quite different from permitting the carrier to compel the shipper to ob- [443] tain insurance, or to stand his own insurer, against negligence on the part of the carrier.

It was argued for the appellant that the law of New York, the *lex loci contractus*, was settled by recent decisions of the Court of Appeals of that State in favor of the right of a carrier of goods or passengers, by land or water, to stipulate for exemption from all liability for his own negligence. *Mynard* v. *Syracuse, B. & N. Y. R. Co.* 71 N. Y. 180; *Spinetti* v. *Atlas Steamship Co.* 80 N. Y. 71.

But on this subject, as on any question de-

pending upon mercantile law and not upon local statute or usage, it is well settled that the Courts of the United States are not bound by decisions of the courts of the State, but will exercise their own judgment, even when their jurisdiction attaches only by reason of the citizenship of the parties, in an action at law of which the courts of the State have concurrent jurisdiction, and upon a contract made and to be performed within the State. *New York Cent. R. Co.* v. *Lockwood*, 84 U. S. 17 Wall. 357, 368 [21:627, 636]; *Myrick* v. *Mich. Cent. R. Co.* 107 U. S. 102 [27:325]; *Carpenter* v. *Providence Washington Ins. Co.* 41 U. S. 16 Pet. 495, 511 [10:1044]; *Swift* v. *Tyson*, 41 U. S. 16 Pet. 1 [10:865]; *Brooklyn City & N. R. Co.* v. *Nat. Bank of the Republic*, 102 U. S. 14 [26:61]; *Burgess* v. *Seligman*, 107 U. S. 20, 33 [27:359, 365]; *Smith* v. *Alabama*, 124 U. S. 465, 478 [31:508, 512]; *Bucher* v. *Cheshire R. Co.* 125 U. S. 555, 583 [31:795, 798]. The decisions of the state courts certainly cannot be allowed any greater weight in the federal courts when exercising the admiralty and maritime jurisdiction exclusively vested in them by the Constitution of the United States.

It was also argued in behalf of the appellant, that the validity and effect of this contract, to be performed principally upon the high seas, should be governed by the general maritime law, and that by that law such stipulations are valid. To this argument there are two answers:

First. There is not shown to be any such general maritime law. The industry of the learned counsel for the appellant has collected articles of codes, decisions of courts and opinions of commentators in France, Italy, Germany and Holland, tending to show that, by the law administered in those countries, such a stipulation [444] would be valid. But those decisions and opinions do not appear to have been based on general maritime law, but largely, if not wholly, upon provisions or omissions in the codes of the particular country; and it has been said by many jurists that the law of France, at least, was otherwise. See 2 Pardessus, Droit Commercial, no. 542; 4 Goujet & Meyer, Dict. Droit Commercial, 2d ed. Voiturier, nos. 1, 81; 2 Troplong, Droit Civil, nos. 894, 910, 942, and other books cited in *Peninsular & O. Steam Nav. Co.* v. *Shand*, 3 Moore, P. C. N. S. 272, 278, 285, 286; 25 Laurent, Droit Civil Francais, no. 532; Mellish, *L. J.*, in *Cohen* v. *Southeastern R. Co.* L. R. 2 Exch. Div. 253, 257.

Second. The general maritime law is in force in this country, or in any other, so far only as it has been adopted by the laws or usages thereof; and no rule of the general maritime law (if any exists) concerning the validity of such a stipulation as that now before us has ever been adopted in the United States or in England, or recognized in the admiralty courts of either. *The Lottawanna*, 88 U. S. 21 Wall. 558 [22: 654]; *The Scotland*, 105 U. S. 24, 29, 33 [26: 1001, 1003, 1004]; *The Belgenland*, 114 U. S. 355, 369 [29: 152, 157]; *The Harrisburg*, 119 U. S. 199 [30: 358]; *The Hamburg*, 2 Moore, P. C. N. S. 289, 319; *S. C.* Brown & Lush. 253, 272; *Lloyd* v. *Guibert*, L. R. 1 Q. B. 115, 123, 124; *S. C.* 6 Best & S. 100, 134, 136; *The Gaetano & Maria*, L. R. 7 Prob. Div. 137, 143.

It was argued in this court, as it had been below, that as the contract was to be chiefly performed on board of a British vessel and to be finally completed in Great Britain, and the damage occurred in Great Britain, the case should be determined by the British law, and that by that law the clause exempting the appellant from liability for losses occasioned by the negligence of its servants was valid.

The circuit court declined to yield to this argument, upon two grounds: 1st. That as the answer expressly admitted the jurisdiction of the circuit court asserted in the libel, and the law of Great Britain had not been set up in the answer nor proved as a fact, the case must be decided according to the law of the federal courts as a question of general commercial law. 2d. That there was nothing in the contracts of affreightment to indicate a contracting in view of any other law than the recognized law of such [445] forum in the United States as should have cognizance of suits on the contracts. 22 Blatchf. 397.

The law of Great Britain since the Declaration of Independence is the law of a foreign country, and, like any other foreign law, is matter of fact, which the courts of this country cannot be presumed to be acquainted with, or to have judicial knowledge of, unless it is pleaded and proved.

The rule that the courts of one country cannot take cognizance of the law of another without plea and proof has been constantly maintained at law and in equity, in England and America. *Church* v. *Hubbart*, 6 U. S. 2 Cranch, 187, 236 [2: 249]; *Ennis* v. *Smith*, 55 U. S. 14 How. 400, 426, 427 [14: 472]; *Dainese* v. *Hale*, 91 U. S. 13, 20, 21 [23: 190, 193]; *Pierce* v. *Indseth*, 106 U. S. 546 [27: 254]; *Ex parte Oridland*, 3 Ves. & B. 94, 99; *Lloyd* v. *Guibert*, L. R. 1 Q. B. 115, 129; *S. C.* 6 Best & S. 100, 142. In the case last cited, *Mr. Justice* Willes, delivering judgment in the Exchequer Chamber, said: "In order to preclude all misapprehension, it may be well to add, that a party who relies upon a right or an exemption by foreign law is bound to bring such law properly before the court, and to establish it in proof. Otherwise the court, not being entitled to notice such law without judicial proof, must proceed according to the law of England."

The decision in *Lamar* v. *Micou*, 112 U. S. 452 [28:751], and 114 U. S. 218 [29:94], did not in the least qualify this rule, but only applied the settled doctrine that the Circuit Courts of the United States, and this court on appeal from their decisions, take judicial notice of the laws of the several States of the Union as domestic laws; and it has since been adjudged, in accordance with the general rule as to foreign law, that this court, upon writ of error to the highest court of a State, does not take judicial notice of the law of another State, not proved in that court and made part of the record sent up, unless by the local law that court takes judicial notice of it. *Hanley* v. *Donoghue*, 116 U. S. 1 [29: 535]; *Renaud* v. *Abbott*, 116 U. S. 277, 285 [29: 629, 631].

The rule is as well established in courts of admiralty as in courts of common law or courts of equity. *Chief Justice* Marshall, delivering judgment in the earliest admiralty appeal in which he took part, said: "That the laws of a foreign nation, designed only for the direc- [446] tion of its own affairs, are not to be noticed by the courts of other countries, unless proved as

facts, and that this court, with respect to facts, is limited to the statement made in the court below, cannot be questioned." *Talbot* v. *Seeman*, 5 U. S. 1 Cranch, 1, 38 [2: 15]. And in a recent case in admiralty, *Mr. Justice* Bradley said: "If a collision should occur in British waters, at least between British ships, and the injured party should seek relief in our courts, we would administer justice according to the British law, so far as the rights and liabilities of the parties were concerned, provided it were shown what that law was. If not shown, we would apply our own law to the case. In the French or Dutch tribunals they would do the same." *The Scotland*, 105 U. S. 24, 29 [26: 1001, 1003].

So *Sir* William Scott, in the High Court of Admiralty, said: "Upon all principles of common jurisprudence, foreign law is always to be proved as a fact." *The Louis*, 2 Dodson, 210, 241. To the same effect are the judgments of the Judicial Committee of the Privy Council in *The Prince George*, 4 Moore, P. C. 21, and *The Peerless*, 13 Moore, P. C. 484. And in a more recent case, cited by the appellant, *Sir* Robert Phillimore said: "I have no doubt whatever that those who rely upon the difference between the foreign law and the law of the forum in which the case is brought are bound to establish that difference by competent evidence." *The Duero*, L. R. 2 Adm. & Eccl. 393, 397.

It was, therefore, rightly held by the circuit court, upon the pleadings and proofs upon which the case had been argued, that the question whether the British law differed from our own was not open.

But it appears by the supplemental record, certified to this court in obedience to a writ of *certiorari*, that after the circuit court had delivered its opinion and filed its findings of fact and conclusions of law, and before the entry of a final decree, the appellant moved for leave to amend the answer by averring the existence of the British law and its applicability to this case, and to prove that law; and that the motion was denied by the circuit court, because the proposed allegation did not set up any fact [447] unknown to the appellant at the time of filing the original answer, and could not be allowed under the rules of that court. 22 Blatchf. 402-404.

On such a question we should be slow to overrule a decision of the circuit court. But we are not prepared to say that if, upon full consideration, justice should appear to require it, we might not do so, and order the case to be remanded to that court with directions to allow the answer to be amended and proof of the foreign law to be introduced. *The Adeline*, 13 U. S. 9 Cranch, 244, 284 [3:719]; *The Marianna Flora*, 24 U. S. 11 Wheat. 1, 38 [6:405]; *The Charles Morgan*, 115 U. S. 69 [29:316]; *Merchants Ins. Co.* v. *Allen*, 121 U. S. 67 [30: 858]; *The Gazelle*, 128 U. S. 474 [*ante*, 496]. And the question of the effect which the law of Great Britain, if duly alleged and proved, should have upon this case has been fully and ably argued.

Under these circumstances, we prefer not to rest our judgment upon technical grounds of pleading or evidence, but, taking the same course as in *Merchants Ins. Co.* v. *Allen*, just cited, proceed to consider the question of the effect of the proof offered, if admitted.

It appears by the cases cited in behalf of the appellant, and is hardly denied by the appellee, that under the existing law of Great Britain, as declared by the latest decisions of her courts, common carriers, by land or sea, except so far as they are controlled by the provisions of the Railway and Canal Traffic Act of 1854,* are permitted to exempt themselves by express contract from responsibility for losses occasioned by negligence of their servants. *The Duero*, L. R. 2 Adm. & Eccl. 393; *Taubman* v. *Pac. Steam Nav. Co.* 26 L. T. N. S. 704; *Steel* v. *State Line Steamship Co.* L. R. 3 App. Cas. 72; *Manchester, S. & L. R. Co.* v. *Brown*, L. R. 8 App. Cas. 703. It may therefore be assumed that the stipulation now in question, though invalid by our law, would be valid according to the law of Great Britain.

The general rule as to what law should prevail, in case of a conflict of laws concerning a private contract, was concisely and exactly stated before the Declaration of Independence by *Lord* Mansfield (as reported by *Sir* William Blackstone, who had been of counsel in the case) as follows: "The general rule, established [448] *ex comitate et jure gentium*, is that the place where the contract is made, and not where the action is brought, is to be considered in expounding and enforcing the contract. But this rule admits of an exception, when the parties (at the time of making the contract) had a view to a different kingdom. *Robinson* v. *Bland*, 1 W. Bl. 234, 256, 258; *S. C.* 2 Burr. 1077, 1078.

The recent decisions by eminent English judges, cited at the bar, so clearly affirm and so strikingly illustrate the rule, as applied to cases more or less resembling the case before us, that a full statement of them will not be inappropriate.

In *Peninsular & O. Steam Nav. Co.* v. *Shand*, 3 Moore, P. C. N. S. 272, 290, *Lord Justice* Turner, delivering judgment in the Privy Council, reversing a decision of the Supreme Court of Mauritius, said: "The general rule is that the law of the country where a contract is made governs as to the nature, the obligation and the interpretation of it. The parties to a contract are either the subjects of the power there ruling, or as temporary residents owe it a temporary allegiance; in either case equally, they must be understood to submit to the law there prevailing, and to agree to its action upon their contract. It is, of course, immaterial that such agreement is not expressed in terms; it is equally an agreement in fact, presumed *de jure;* and a foreign court interpreting or enforcing it on any contrary rule defeats the intention of the parties, as well as neglects to observe the recognized comity of nations."

It was accordingly held that the law of England, and not the French law in force at Mauritius, governed the validity and construction of a contract made in an English port between an English company and an English subject to carry him thence by way of Alexandria and Suez to Mauritius, and containing a stipulation that the company should not be liable for loss of passengers' baggage, which

*1 Inters. Com. Rep. 844.

the court in Mauritius had held to be invalid by the French law. 3 Moore, P. C. N. S. 278.

Lord Justice Turner observed, that it was a satisfaction to find that the Court of Cassation in France had pronounced a judgment to the same effect, under precisely similar circum-
[449] stances, in the case of a French officer taking passage at Hong Kong, an English possession for Marseilles in France, under a like contract, on a ship of the same company, which was wrecked in the Red Sea, owing to the negligence of her master and crew. *Julien* v. *Peninsular & O. Steam Nav. Co.* imperfectly stated in 3 Moore P. C. N. S. 282, note, and fully reported in 75 Journal du Palais (1864) 225.

The case of *Lloyd* v. *Guibert*, 6 Best & S. 100; *S. C.* L. R. 1 Q. B. 115, decided in the Queen's Bench before, and the Exchequer Chamber after, the decision in the Privy Council just referred to, presented this peculiar state of facts: A French ship owned by Frenchmen was chartered by the master, in pursuance of his general authority as such, in a Danish West India island, to a British subject, who knew her to be French, for a voyage from St. Marc in Hayti to Havre, London or Liverpool at the charterer's option, and he shipped a cargo from St. Marc to Liverpool. On the voyage, the ship sustained damage from a storm which compelled her to put into a Portuguese port. There the master lawfully borrowed money on bottomry, and repaired the ship and she carried her cargo safe to Liverpool. The bondholder proceeded in an English Court of Admiralty against the ship, freight and cargo, which being insufficient to satisfy the bond, he brought an action at law to recover the deficiency against the owners of the ship; and they abandoned the ship and freight in such manner as by the French law absolved them from liability. It was held that the French law governed the case, and therefore the plaintiff could not recover.

It thus appears that in that case the question of the intent of the parties was complicated with that of the lawful authority of the master; and the decision in the Queen's Bench was put wholly upon the ground that the extent of his authority to bind the ship, the freight or the owners was limited by the law of the home port of the ship, of which her flag was sufficient notice. 6 Best & S. 100. That decision was in accordance with an earlier one of *Mr. Justice* Story, in *Pope* v. *Nickerson*, 3 Story, 465; as well as with later ones in the Privy Council, on appeal from the High Court of
[450] Admiralty, in which the validity of a bottomry bond has been determined by the law prevailing at the home port of the ship, and not by the law of the port where the bond was given. *The Karnak*, L. R. 2 Priv. C. 505, 512; *The Gaetano & Maria*, L. R. 7 Prob. Div. 137. See also *The Woodland*, 7 Ben. 110, 118, 14 Blatchf. 499, 503, and 104 U. S. 180 [26:705].

The judgment in the Exchequer Chamber in *Lloyd* v. *Guibert* was put upon somewhat broader ground. *Mr. Justice* Willes, in delivering that judgment, said: "It is generally agreed that the law of the place where the contract is made is *prima facie* that which the parties intended, or ought to be presumed to have adopted as the footing upon which they dealt, and that such law ought therefore to prevail in the absence of circumstances indicating a different intention, as, for instance, that the contract is to be entirely performed elsewhere, or that the subject matter is immovable property situated in another country, and so forth; which latter, though sometimes treated as distinct rules, appear more properly to be classed as exceptions to the more general one, by reason of the circumstances indicating an intention to be bound by a law different from that of the place where the contract is made; which intention is inferred from the subject matter and from the surrounding circumstances, so far as they are relevant to construe and determine the character of the contract." L. R. 1 Q. B. 122, 123; 6 Best & S. 133.

It was accordingly held, conformably to the judgment in *Peninsular & O. Steam Nav. Co.* v. *Shand*, above cited, that the law of England, as the law of the place of final performance or port of discharge, did not govern the case, because it was "manifest that what was to be done at Liverpool was but a small portion of the entire service to be rendered, and that the character of the contract cannot be determined thereby," although as to the mode of delivery the usages of Liverpool would govern. L. R. 1 Q. B. 125, 126; 6 Best & S. 137. It was then observed that the law of Portugal, in force where the bottomry bond was given, could not affect the case; that the law of Hayti had not been mentioned or relied upon in argument; and that "in favor of the law of Denmark, there is the [451] cardinal fact that the contract was made in Danish territory, and further, that the first act done towards performance was weighing anchor in a Danish port;" and it was finally, upon a view of all the circumstances of the case, decided that the law of France, to which the ship and her owners belonged, must govern the question at issue.

The decision was, in substance, that the presumption that the contract should be governed by the law of Denmark, in force where it was made, was not overcome in favor of the law of England by the fact that the voyage was to an English port and the charterer an Englishman, nor in favor of the law of Portugal by the fact that the bottomry bond was given in a Portuguese port; but that the ordinary presumption was overcome by the consideration that French owners and an English charterer, making a charter-party in the French language of a French ship, in a port where both were foreigners, to be performed partly there by weighing anchor for the port of loading (a place where both parties would also be foreigners), partly at that port by taking the cargo on board, principally on the high seas, and partly by final delivery in the port of discharge, must have intended to look to the law of France as governing the question of the liability of the owner beyond the value of the ship and freight.

In two later cases, in each of which the judgment of the Queen's Bench Division was affirmed by the Court of Appeal, the law of the place where the contract was made was held to govern, notwithstanding some of the facts strongly pointed toward the application of another law; in the one case, to the law of the ship's flag; and in the other, to the law of the port where that part of the contract was to be

performed, for the nonperformance of which the suit was brought.

In the first case, a bill of lading, issued in England in the English language to an English subject, by a company described therein as an English company and in fact registered both in England and in Holland, for goods shipped at Singapore, an English port, to be carried to a port in Java, a Dutch possession, in a vessel with a Dutch name, registered in Holland, commanded by a Dutch master and carrying the Dutch flag, in order to obtain the privilege [452] of trading with Java, was held to be governed by the law of England, and not by that of Holland, in determining the validity and construction of a clause exempting the company from liability for negligence of master and crew; and *Lords Justices* Brett and Lindley both considered it immaterial whether the ship was regarded as English or Dutch. *Chartered Mercantile Bank* v. *Netherlands India Steam Nav. Co.* L. R. 9 Q. B. Div. 118, and L. R. 10 Q. B. Div. 521, 529, 536, 540, 544.

As *Lord Justice* Lindley observed: "This conclusion is not at all at variance with *Lloyd* v. *Guibert*, but rather in accordance with it. It is true that in that case the law of the flag prevailed; but the intention of the parties was admitted to be the crucial test; and the law of the ship's flag was considered as the law intended by the parties to govern their contract, as there really was no other law which they could reasonably be supposed to have contemplated. The plaintiff there was English, the defendant French; the *lex loci contractus* was Danish; the ship was French; her master was French, and the contract was in the French language. The voyage was from Hayti to Liverpool. The facts here are entirely different, and so is the inference to be deduced from them. The *lex loci contractus* was here English, and ought to prevail unless there is some good ground to the contrary. So far from there being such ground, the inference is very strong that the parties really intended to contract with reference to English law." L. R. 10 Q. B. Div. 540.

In the remaining English case, a contract made in London between two English mercantile houses, by which one agreed to sell to the other 20,000 tons of Algerian *esparto*, to be shipped by a French company at an Algerian port on board vessels furnished by the purchasers at London, and to be paid for by them in London on arrival, was held to be an English contract, governed by English law; notwithstanding that the shipment of the goods in Algiers had been prevented by *vis major*, which, by the law of France in force there, excused the sellers from performing the contract. *Jacobs* v. *Crédit Lyonnais*, L. R. 12 Q. B. Div. 589.

That result was reached by applying the gen- [453] eral rule, expressed by Denman, *J.*, in these words: "The general rule is, that where a contract is made in England between merchants carrying on business here, as this is but to be performed elsewhere, the construction of the contract, and all its incidents, are to be governed by the law of the country where the contract is made, unless there is something to show that the intention of the parties was that the law of the country where the contract is to be performed should prevail;" and summed up by the Court of Appeal, consisting of Brett, *M. R.*, and Bowen, *L. J.*, as follows: "The broad rule is that the law of a country where a contract is made presumably governs the nature, the obligation and the interpretation of it, unless the contrary appears to be the expressed intention of the parties." L. R. 12 Q. B. Div. 596, 597, 600.

This court has not heretofore had occasion to consider by what law contracts like those now before us should be expounded. But it has often affirmed and acted on the general rule that contracts are to be governed, as to their nature, their validity and their interpretation, by the law of the place where they were made, unless the contracting parties clearly appear to have had some other law in view. *Cox* v. *U. S.* 31 U. S. 6 Pet. 172 [8: 359]; *Scudder* v. *Union Nat. Bank*, 91 U. S. 406 [23: 245] *Pritchard* v. *Norton*, 106 U. S. 124 [27: 104]; *Lamar* v. *Micou*, 114 U. S. 218 [29: 94]; *Watts* v. *Camors*, 115 U. S. 353, 362 [29: 406, 409].

The opinion in *Watts* v. *Camors*, just cited, may require a word or two of explanation. It was there contested whether, in a charter-party made at New Orleans between an English owner and an American charterer of an English ship for a voyage from New Orleans to a port on the Continent of Europe, a clause regulating the amount payable in case of any breach of the contract was to be considered as liquidating the damages, or as a penalty only. Such was the question of which the court said that if it depended upon the intent of the parties, and consequently upon the law which they must be presumed to have had in view, they "must be presumed to look to the general maritime law of the two countries, and not to the local law of the State in which the contract is signed." The choice there was not [454] between the American law and the English law, but between the statutes and the decisions of the State of Louisiana, and a rule of the maritime law common to the United States and England.

Some reliance was placed by the appellant upon the following observations of *Mr. Justice* Story, sitting in the circuit court:

"If a contract is to be performed, partly in one country and partly in another country, it admits of a double aspect, nay, it has a double operation, and is, as to the particular parts, to be interpreted distinctively; that is, according to the laws of the country where the particular parts are to be performed or executed. This would be clearly seen in the case of a bill of lading of goods, deliverable in portions or parts at ports in different countries. Indeed, in cases of contracts of affreightment and shipment, it must often happen that the contract looks to different portions of it to be performed in different countries; some portions at the home port, some at the foreign port and some at the return port." "The goods here were deliverable in Philadelphia; and what would be an effectual delivery thereof, in the sense of the law (which is sometimes a nice question), would, beyond question, be settled by the law of Pennsylvania. But to what extent the owners of the schooner are liable to the shippers for a nonfulfillment of a contract of shipment of the master—whether they incur an absolute or a limited liability,

must depend upon the nature and extent of the authority which the owners gave him, and this is to be measured by the law of Massachusetts," where the ship and her owners belonged. *Pope* v. *Nickerson*, 3 Story, 465, 484, 485.

But in that case the last point stated was the only one in judgment; and the previous remarks evidently had regard to such distinct obligations included in the contract of affreightment as are to be performed in a particular port—for instance, what would be an effectual delivery, so as to terminate the liability of the carrier, which, in the absence of express stipulation on that subject, is ordinarily governed by the law or usage of the port of discharge. [455] *Robertson* v. *Jackson*, 2 C. B. 412; *Lloyd* v. *Guibert*, L. R. 1 Q. B. 115, 126; *S. C.* 6 Best & S. 100, 137.

In *Morgan* v. *New Orleans, M. & T. R. Co.* 2 Woods, 244, a contract made in New York, by a person residing there, with a railroad corporation having its principal office there but deriving its powers from the laws of other States, for the conveyance of interests in railroads and steamboat lines, the delivery of property and the building of a railroad in those States, and which, therefore, might be performed partly in New York and must be performed partly in the other States, was held by *Mr. Justice* Bradley, so far as concerned the right of one party to have the contract rescinded on account of nonperformance by the other party, to be governed by the law of New York, and not by either of the diverse laws of the other States in which parts of the contract were to be performed.

In *Hale* v. *New Jersey Steam Nav. Co.* 15 Conn. 538, 546, goods were shipped at New York for Providence in Rhode Island or Boston in Massachusetts, on a steamboat employed in the business of transportation between New York and Providence; and an exemption, claimed by the carrier under a public notice, was disallowed by the Supreme Court of Connecticut, because by the then law of New York the liability of a common carrier could not be limited by such a notice. *Chief Justice* Williams, delivering judgment, said: "The question is, by what law is this contract to be governed? The rule upon that subject is well settled, and has been often recognized by this court, that contracts are to be construed according to the laws of the State where made, unless it is presumed from their tenor that they were entered into with a view to the laws of some other State. There is nothing in this case, either from the location of the parties or the nature of the contract, which shows that they could have had any other law in view than that of the place where it was made. Indeed, as the goods were shipped to be transported to Boston or Providence, there would be the most entire uncertainty what was to be the law of the case if any other rule was to prevail. We have, therefore, no doubt that the law of New [456] York, as to the duties and obligations of common carriers, is to be the law of the case."

In *Dyke* v. *Erie R. Co.* 45 N. Y. 113, 117, a passenger, traveling upon a ticket by which a railroad corporation, established in New York, and whose road extended from one place to another in that State, passing through the States of Pennsylvania and New Jersey by their permission, agreed to carry him from one to another place in New York, was injured in Pennsylvania, by the law of which the damages in actions against railroads for personal jury were limited to $3,000. The Court of Appeals of New York held that the law of Pennsylvania had no application to the case; and *Mr. Justice* Allen, delivering the opinion, referred to the case of *Peninsular & O. Steam Nav. Co.* v. *Shand*, before cited, as analogous in principle, and said: "The contract was single and the performance one continuous act. The defendant did not undertake for one specific act, in part performance, in one State, and another specific and distinct act in another of the States named, as to which the parties could be presumed to have had in view the laws and usages of distinct places. Whatever was done in Pennsylvania was a part of the single act of transportation from Attica or Waverly in the State of New York to the City of New York, and in performance of an obligation assumed and undertaken in this State, and which was indivisible. The obligation was created here, and by force of the laws of this State, and force and effect must be given to it in conformity to the laws of New York. The performance was to commence in New York, and to be fully completed in the same State, but liable to breach, partial or entire, in the States of Pennsylvania and New Jersey, through which the road of the defendant passed; but whether the contract was broken, and if broken the consequences of the breach, should be determined by the laws of this State. It cannot be assumed that the parties intended to subject the contract to the laws of the other States, or that their rights and liabilities should be qualified or varied by any diversities that might exist between the laws of those States and the *lex loci contractus*."

In *McDaniel* v. *Chicago & Northwestern Railway Company*, 24 Iowa, 412, 417, cattle trans- [457] ported by a railroad company from a place in Iowa to a place in Illinois, under a special contract made in Iowa, containing a stipulation that the company should be exempt from liability for any damage, unless resulting from collision or derailing of trains, were injured in Illinois by the negligence of the company's servants; and the Supreme Court of Iowa, *Chief Justice* Dillon presiding, held the case to be governed by the law of Iowa, which permitted no common carrier to exempt himself from the liability which would exist in the absence of contract. The court said: "The contract being entire and indivisible, made in Iowa, and to be partly performed here, it must, as to its validity, nature, obligation and interpretation, be governed by our law. And by our law, so far as it seeks to change the common law, it is wholly nugatory and inoperative. The rights of the parties, then, are to be determined, under the common law, the same as if no such contract had been made."

So in *Pennsylvania Co.* v. *Fairchild*, 69 Ill. 260, where a railroad company received in Indiana goods consigned to Leavenworth, in Kansas, and carried them to Chicago in Illinois, and there delivered them to another railroad company, in whose custody they were destroyed by fire, the Supreme Court of Illinois held that the case must be governed by the law of Indi-

ana, by which the first company was not liable for the loss of the goods after they had passed into the custody of the next carrier in the line of transit.

The other cases in the courts of the several States, cited at the bar, afford no certain or satisfactory guide. Two cases, held not to be governed by a statute of Pennsylvania providing that no railroad corporation should be liable for a loss of passenger's baggage beyond $300, unless the excess in value was disclosed and paid for, were decided (whether rightly or not we need not consider) without much reference to authority, and upon their peculiar circumstances—the one case, on the ground that a contract by a New Jersey corporation to carry a passenger and his baggage from a wharf in Philadelphia across the Delaware River, in in which the States of Pennsylvania and New Jersey had equal rights of navigation and pas-
[458] sage, and thence through the State of New Jersey to Atlantic City, was a contract to be performed in New Jersey and governed by the law of that State; *Brown* v. *Camden & A. R. Co.* 83 Pa. 316; and the other case, on the ground that the baggage, received at a town in Pennsylvania to be carried to New York City, having been lost after its arrival by negligence on the part of the railroad company, the contract, so far as concerned the delivery, was to be governed by the law of New York. *Curtis* v. *Delaware, L. & W. R. Co.* 74 N. Y. 116. The suggestion in *Barter* v. *Wheeler*, 49 N. H. 9, 29, that the question, whether the liability of a railroad corporation for goods transported through parts of two States was that of a common carrier or of a forwarder only, should be governed by the law of the State in which the loss happened, was not necessary to the decision, and appears to be based on a strained inference from the observations of *Mr. Justice* Story in *Pope* v. *Nickerson*, above cited. In a later case, the Supreme Court of New Hampshire reserved any expression of opinion upon a like question. *Gray* v. *Jackson*, 51 N.H. 9,39.

This review of the principal cases demonstrates that according to the great preponderance, if not the uniform concurrence, of authority, the general rule, that the nature, the obligation and the interpretation of a contract are to be governed by the law of the place where it is made, unless the parties at the time of making it have some other law in view, requires a contract of affreightment, made in one country between citizens or residents thereof, and the performance of which begins there, to be governed by the law of that country, unless the parties, when entering into the contract, clearly manifest a mutual intention that it shall be governed by the law of some other country.

There does not appear to us to be anything in either of the bills of lading in the present case, tending to show that the contracting parties looked to the law of England, or to any other law than that of the place where the contract was made.

The bill of lading for the bacon and hams was made and dated at New York, and signed by
[459] the ship's agent there. It acknowledges that the goods have been shipped "in and upon the steamship called Montana, now lying in the Port of New York and bound for the Port of Liverpool," and are to be delivered at Liverpool. It contains no indication that the owners of the steamship are English, or that their principal place of business is in England, rather than in this country. On the contrary, the only description of the line of steamships, or of the place of business of their owners, is in a memorandum in the margin, as follows: "Guion Line. United States Mail Steamers. New York: 29 Broadway. Liverpool: 11 Rumford St." No distinction is made between the places of business at New York and at Liverpool, except that the former is named first. The reservation of liberty, in case of an interruption of the voyage, "to tranship the goods by any other steamer," would permit transhipment into a vessel of any other line, English or American. And general average is to be computed, not by any local law or usage, but "according to York-Antwerp rules," which are the rules drawn up in 1864 at York in England, and adopted in 1877 at Antwerp in Belgium, at international conferences of representatives of the more important mercantile associations of the United States, as well as of the maritime countries of Europe. Lowndes, General Average, 3d ed. Appendix Q.

The contract being made at New York, the ship owner having a place of business there, and the shipper being an American, both parties must be presumed to have submitted themselves to the law there prevailing, and to have agreed to its action upon their contract. The contract is a single one, and its principal object, the transportation of the goods, is one continuous act, to begin in the Port of New York, to be chiefly performed on the high seas, and to end at the Port of Liverpool. The facts that the goods are to be delivered at Liverpool, and the freight and primage therefor payable there in sterling currency, do not make the contract an English contract, or refer to the English law the question of the liability of the carrier for the negligence of the master and crew in the course of the voyage. *Peninsular & O. Steam Nav. Co.* v. *Shand, Lloyd* v. *Guibert* and *Chartered Mercantile Bank* v. *Netherlands India Steam Nav. Co.*, before cited

There is even less ground for holding the [460]
three bills of lading of the cotton to be English contracts. Each of them is made and dated at Nashville, an inland city, and is a through bill of lading, over the Louisville and Nashville Railroad and its connections, and by the Williams and Guion Steamship Company, from Nashville to Liverpool; and the whole freight from Nashville to Liverpool is to be "at the rate of fifty-four pence sterling per 100 lbs. gross weight." It is stipulated that the liability of the Louisville and Nashville Railroad and its connections as common carriers "terminates on delivery of the property to the steamship company at New York, when the liability of the steamship commences, and not before;" and that "The property shall be transported from the Port of New York to the Port of Liverpool by the said steamship company, with liberty to ship by any other steamship or steamship line." And in the margin is this significant reference to a provision of the statutes of the United States, applicable to the ocean transportation only: "ATTENTION OF SHIPPERS IS CALLED TO THE ACT OF CONGRESS OF 1851: 'Any person or persons shipping oil of vitriol,

unslacked lime, inflammable matches [or] gunpowder in a ship or vessel taking cargo for divers persons on freight, without delivering *at the time of shipment* a note in writing, expressing the nature and character of such merchandise, to the master, mate or officer, or person in charge of the loading of the ship or vessel, shall forfeit to the *United States one thousand dollars.*' " Act of March 3, 1851, c. 43, § 7; 9 Stat. at L. 636; R. S. § 4288.

It was argued that as each bill of lading, drawn up and signed by the carrier and assented to by the shipper, contained a stipulation that the carrier should not be liable for losses by perils of the sea arising from the negligence of its servants, both parties must be presumed to have intended to be bound by that stipulation, and must therefore, the stipulation being void by our law and valid by the law of England, have intended that their contract should be governed by the English law; and one passage in the judgment in *Peninsular & O. Steam Nav. Co.* v. *Shand* gives some color to the argument. 3 Moore, P. C. N. S. 291. But the facts of the [461] two cases are quite different in this respect. In that case, effect was given to the law of England, where the contract was made; and both parties were English, and must be held to have known the law of their own country. In this case, the contract was made in this country, between parties one residing and the other doing business here; and the law of England is a foreign law, which the American shipper is not presumed to know. Both parties or either of them may have supposed the stipulation to be valid; or both or either may have known that by our law, as declared by this court, it was void. In either aspect, there is no ground for inferring that the shipper, at least, had any intention, for the purpose of securing its validity, to be governed by a foreign law, which he is not shown, and cannot be presumed, to have had any knowledge of.

Our conclusion on the principal question in the case may be summed up thus: Each of the bills of lading is an American and not an English contract, and, so far as concerns the obligation to carry the goods in safety, is to be governed by the American law, and not by the law, municipal or maritime, of any other country. By our law, as declared by this court, the stipulation by which the appellant undertook to exempt itself from liability for the negligence of its servants is contrary to public policy and therefore void; and the loss of the goods was a breach of the contract, for which the shipper might maintain a suit against the carrier. This being so, the fact that the place where the vessel went ashore, in consequence of the negligence of the master and officers in the prosecution of the voyage, was upon the coast of Great Britain, is quite immaterial.

This conclusion is in accordance with the decision of *Judge* Brown in the District Court of the United States for the Southern District of New York in *The Brantford City*, 29 Fed. Rep. 373, which appears to us to proceed upon more satisfactory grounds than the opposing decision of *Mr. Justice* Chitty, sitting alone in the Chancery Division, made since this case was argued, and, so far as we are informed, not reported in the Law Reports, nor affirmed or considered by any of the higher courts of Great Britain. *Re Missouri Steamship Co.* 58 L. T. N. S. 377.

The present case does not require us to de- [46
termine what effect the courts of the United States should give to this contract, if it had expressly provided that any question arising under it should be governed by the law of England.

The question of the subrogation of the libelant to the rights of the shippers against the carrier presents no serious difficulty.

From the very nature of the contract of insurance as a contract of indemnity, the insurer, upon paying to the assured the amount of a loss, total or partial, of the goods insured, becomes, without any formal assignment, or any express stipulation to that effect in the policy, subrogated in a corresponding amount to the assured's right of action against the carrier or other person responsible for the loss; and in a court of admiralty may assert in his own name that right of the shipper. *The Potomac*, 105 U. S. 630, 634 [26: 1194, 1195]; *Phœnix Ins. Co.* v. *Erie & W. Transp. Co.* 117 U. S. 312, 321 [29: 873, 878].

In the present case, the libelant, before the filing of the libel, paid to each of the shippers the greater part of his insurance, and thereby became entitled to recover so much, at least, from the carrier. The rest of the insurance money was paid by the libelant before the argument in the district court, and that amount might have been claimed by amendment, if not under the original libel. *The Charles Morgan*, 115 U. S. 69, 75 [29: 316, 318]; *The Gazelle*, 128 U. S. 474 [*ante*, 496]. The question of the right of the libelant to recover to the whole extent of the insurance so paid was litigated and included in the decree in the district court, and in the circuit court on appeal; and no objection was made in either of those courts, or at the argument in this court, to any insufficiency of the libel in this particular.

The appellant does, however, object that the decree should not include the amount of the loss on the cotton shipped under through bills of lading from Nashville to Liverpool. This objection is grounded on a clause in those bills of lading, which is not found in the bill of lading of the bacon and hams shipped at New York; and on the adjudication in *Phœnix Ins. Co.* v. *Erie & W. Transp. Co.* 117 U. S. 312 [29: 873], that a stipulation in a bill of lading, that a carrier, when liable for a loss of the goods, shall have the benefit of any insurance that may have been effected upon them, [46
is valid as between the carrier and the shipper, and therefore limits the right of an insurer of the goods, upon paying to the shipper the amount of a loss by stranding, occasioned by the negligence of the carrier's servants, to recover over against the carrier.

But it behooves a carrier setting up such a defense to show clearly that the insurance on the goods is one which by the terms of his contract he is entitled to the benefit of. *Inman* v. *S. C. R. Co.* 129 U. S. 128 [*ante*, 612]. The through bills of lading of the cotton are signed by an agent of the railroad companies and the steamship company, "severally, but not jointly," and contain, in separate columns, two entirely distinct sets of "terms and conditions," the first relating exclusively to the land carriage by the railroads and their connections, and the second

to the ocean transportation by the steamship. The clause relied on, providing that in case of any loss or damage of the goods, whereby any legal liability shall be incurred, that company only shall be held answerable in whose actual custody the goods are at the time, "and the carrier so liable shall have the full benefit of any insurance that may have been effected upon or on account of said goods," is inserted in the midst of the terms and conditions defining the liability of the railroad companies, and is omitted in those defining the liability of the steamship company, plainly signifying an intention that this clause should not apply to the latter. It is quite clear, therefore, that the appellant has no right to claim the benefit of any insurance on the goods. See *Evansville & C. R. Co.* v. *Androscoggin Mills*, 89 U. S. 22 Wall. 594, 602 [22: 724, 726].

The result of these considerations is that *the decree of the Circuit Court is in all respects correct and must be affirmed.*

Mr. Chief Justice **Fuller** and *Mr. Justice* **Lamar** were not members of the Court when this case was argued, and took no part in its decision.

[464] LIVERPOOL AND GREAT WESTERN STEAM COMPANY *v.* INSURANCE COMPANY OF NORTH AMERICA. [No. 6.]

Appeal from the Circuit Court of the United States for the Eastern District of New York. This case was argued and decided with that of *Liverpool & Great Western Steam Co.* v. *Phenix Ins. Co., supra*, and was substantially like it, except that the through bills of lading were for transportation by the New York Central and Hudson River Railroad Company and the Guion Line Steamship Company from Buffalo in the State of New York to Liverpool *via* New York. The Circuit Court's findings of fact, conclusions of law and opinion are printed in 22 Blatchf. 372, and in 22 Fed. Rep. 715.

Decree affirmed.

---

[677] HEMAN B. CHAPMAN, *Plff. in Err.*,

v.

ASHBEL H. BARNEY, President of the UNITED STATES EXPRESS COMPANY.

(See S. C. Reporter's ed. 677-682.)

Amendments discretionary—practice where no answer—amended declaration must be served—jurisdiction—citizenship—express company.

1. Amendments to the declaration in an action of assumpsit are discretionary with the court below, and its action is not reviewable by this court.
2. Where, on account of an amendment of the declaration, it remains without an answer, the plaintiff may move for a judgment for want of an answer, but a jury cannot be called and verdict entered where no issue is joined, unless for assessment of damages merely.
3. Where leave is given to file an amended declaration and the court ordered defendant to plead thereto within ten days after a service of a copy thereof, the plaintiff is not entitled to judgment without conforming to the conditions imposed by serving a copy on the defendant, and giving him the time stated in the order to plead thereto.
4. The question whether this court has jurisdiction in a case, when presented by the record, although not raised by either party, must be considered.
5. Where jurisdiction depends upon citizenship of the parties, such citizenship, or the facts which, in legal intendment, constitute it, should be distinctly and positively averred in the pleading, or should appear in the record.
6. An express company is not a citizen of a State within the meaning of the statutes regulating jurisdiction, unless it is a corporation.

[No. 150.]

Submitted Jan. 8, 1889. Decided March 5, 1889.

IN ERROR to the Circuit Court of the United States for the Northern District of Illinois, to review a judgment for plaintiff in an action to recover money. *Reversed.*

The facts are stated in the opinion.

Mr. **Robert T. McNeal** for plaintiff in error.

No counsel appeared for defendant in error.

Mr. Justice **Lamar** delivered the opinion of [678] the court:

In its original form, this was an action of assumpsit, brought in the court below, by the United States Express Company, alleged to have been organized under and by virtue of the Laws of the State of New York, and a citizen of that State, against Heman B. Chapman, a citizen of Illinois, to recover the sum of $14,000, in money, alleged to have been intrusted to him for delivery to a certain company at La Salle, Illinois, and converted by him to his own use.

At the same term of the court in which the declaration was filed, Chapman answered, setting up two defenses, viz.: (1) *nonassumpsit;* and (2) *nul tiel* corporation. On the 8th of August, 1879, upon statutory affidavit filed on behalf of the company, a writ of attachment was issued, under which writ the marshal of the [679] district levied upon certain personal property and effects of the plaintiff in error.

At the succeeding term of the court, upon motions made by the company for that purpose, leave was given it to file an amended declaration, and to change its action from assumpsit to trover; and the plaintiff in error was ruled to plead to the amended declaration within ten days after service of a copy thereof upon his attorneys. In conformity with such order, at the December Term, 1879, of the court, the plaintiff amended the declaration so as to make it, in lieu of the original, read as follows:

"Ashbel H. Barney, President of the United States Express Company, a joint stock company organized under and by virtue of a Law of the State of New York, and which said company is authorized by the Laws of the State of New York to maintain and bring suits, in the name of its president, for or on account of any right of action accruing to said company, and a citizen of the State of New York, the plaintiff in this suit, by E. F. Bull and James W. Duncan, its attorneys, complains of Heman B. Chapman, a citizen of the State of Illinois," etc.

After the leave to amend the declaration was given, but before the amended declaration was filed, the plaintiff in error was convicted of perjury in the Circuit Court of La Salle County, Illinois, and sentenced to imprisonment in the Joliet Penitentiary, for the term of seven years, under which sentence he was, on January 2, 1880, removed to said penitentiary, and there imprisoned until October, 1884.

Without any proof of service of a copy of the amendment, or any order for the default of the plaintiff in error for want of plea to the amended declaration, and without any plea thereto having been filed by him, the case was called for trial, and the record shows the following proceedings to have been had:

Said cause having been called for trial, plaintiff appeared, and defendant and his attorney failing to appear, thereupon, upon issue joined, comes a jury (naming them), who were sworn well and truly to try said issue, and who, after hearing the evidence, returned the following verdict: "We, the jury, find the issue for the plaintiff, and assess his damages at $14,000;" and then follows judgment, on March 27, 1880, in usual form, on the verdict, for $14,000, and costs.

[680]

On the 8th of October, 1885, plaintiff in error filed in the court below his bond for the prosecution of a writ in error to reverse said judgment, and the same was duly approved by the Circuit Judge. The *mittimus* under the sentence above referred to, the certificate of the warden of the penitentiary, and the affidavit of plaintiff in error, were all filed in the case and made part of the record; and they show that plaintiff in error was imprisoned in the Joliet Penitentiary from January 2, 1880, to October 4, 1884; and another affidavit of the plaintiff in error, also filed in the case and made part of the record, shows that on his discharge from the penitentiary, October, 1884, he was at once arrested on a *capias ad satisfaciendum*, issued upon the judgment above mentioned, and from that time until the issue of the writ he had been imprisoned in the county jail of Cook County, Illinois, upon such *capias*. His case is thus brought within the provision of section 1008 R. S. which provides that, in case a party entitled to a writ of error is imprisoned he may prosecute such writ within two years after judgment, exclusive of the term of such imprisonment.

The assignments of error relied upon are three in number, and are substantially as follows:

(1.) The court erred in permitting a new sole plaintiff to be substituted for, and in the place of, the sole original plaintiff.

(2.) The court erred in submitting to the jury the cause as it stood after the amendments aforesaid, as upon issue joined between said parties, in entering the verdict of the jury in said cause, and in rendering judgment thereon in favor of the defendant in error, when there was no issue joined between said parties.

(3.) The court erred in proceeding to trial and entering a verdict and rendering judgment against plaintiff in error when he had no notice of the order giving leave to amend, or of such amendment, and had had no time or opportunity to plead to the amended declaration, nor any day in court to answer to, or defend against, the suit of the new plaintiff.

[681]

We do not think the first assignment of error well taken. Amendments are discretionary with the court below, and not reviewable by this court. *Mandeville* v. *Wilson*, 9 U. S. 5 Cranch, 15 [3: 23]; *Sheehy* v. *Mandeville*, 10 U. S. 6 Cranch, 253 [3: 215]; *Walden* v. *Craig*, 22 U. S. 9 Wheat. 576 [6: 164]; *Chirac* v. *Reinicker*, 24 U. S. 11 Wheat. 280 [6: 474]; *Wright* v. *Hollingsworth*, 26 U. S. 1 Pet. 165 [7: 96]; *United States* v. *Buford*, 28 U. S. 3 Pet. 12 [7: 585]; *Matheson* v. *Grant*, 43 U. S. 2 How. 263 [11: 261]; *Ex parte Bradstreet*, 32 U. S. 7 Pet. 634 [8: 810].

We think the second point for plaintiff in error is well taken. Where there has been an appearance and no plea, or where, on account of amendments and changes of pleadings, the declaration remains without an answer, the plaintiff may move for a judgment for the want of a plea, as upon *nil dicit*. But no such motion was made. Certainly a jury should not be called, and a verdict entered where no issue is joined, unless for assessment of damages, merely. The court erred in rendering judgment thereon. In addition to the authorities cited by counsel for plaintiff in error, see *Hogan* v. *Ross*, 54 U. S. 13 How. 173 [14: 100].

We also think the third point well taken. The plaintiff was not entitled to judgment without conforming to the conditions imposed by the court in the very order giving leave to amend the declaration; and under such circumstances, the court erred in rendering judgment against defendant.

But aside from all this, we are confronted with the question of jurisdiction, which, although not raised by either party in the court below or in this court, is presented by the record, and under repeated decisions of this court must be considered. *Sullivan* v. *Fulton Steamboat Co.* 19 U. S. 6 Wheat. 450 [5: 302]; *Jackson* v. *Ashton*, 33 U. S. 8 Pet. 148 [8: 898]; *Grace* v. *American Central Ins. Co.* 109 U. S. 278 [27: 932]; *Continental Ins. Co.* v. *Rhoads*, 119 U. S. 237 [30: 380]; *Cameron* v. *Hodges*, 127 U. S. 322 [32: 132], and authorities there cited. The ground upon which the jurisdiction of the federal court is invoked is that of diverse citizenship of the parties. In *Robertson* v. *Cease*, 97 U. S. 646, 649 [24: 1057, 1058], it was said that "Where jurisdiction depends upon the citizenship of the parties, such citizenship, or the facts which in legal intendment constitute it should be distinctly and positively averred in the pleadings, or they should appear affirmatively, and with equal distinctness, in other parts of the record," citing *Pittsburgh, C. & St. L. R. Co.* v. *Ramsey*, 89 U. S. 22 Wall. 322 [22: 823]; *Briggs* v. *Sperry*, 95 U. S. 401 [24: 390]; and *Brown* v. *Keene*, 33 U. S. 8 Pet. 115 [8: 885]. See also *Menard* v. *Goggan*, 121 U. S. 253 [30: 914]; *Halsted* v. *Buster*, 119 U. S. 341 [30: 462]; *Everhart* v. *Huntsville College*, 120 U. S. 223 [30: 623].

[682]

On looking into the record we find no satisfactory showing as to the citizenship of the plaintiff. The allegation of the amended petition is, that the United States Express Company is a joint stock company organized under a law of the State of New York, and is a citizen of that State. But the express company cannot be a *citizen* of New York, within the meaning of the statutes regulating jurisdiction, unless it be a corporation. The allegation that the company was *organized* under the laws of New York is not an allegation that it is a corporation. In fact the allegation is, that the company is *not* a corporation, but a joint stock company—that is, a mere partnership. And, although it may be authorized by the laws of the State of New York to bring suit

in the name of its president, that fact cannot give the company power, by that name, to sue in a federal court.

The company may have been organized under the laws of the State of New York, and may be doing business in that State, and yet all the members of it may not be citizens of that State. The record does not show the citizenship of Barney or of any of the members of the company. They are not shown to be citizens of some State other than Illinois. *Grace* v. *American Central Ins. Co. supra*, and authorities there cited.

For these reasons we are of the opinion that the record does not show a case of which the circuit court could take jurisdiction. The judgment of that court must therefore be reversed at the costs, in this court, of the defendant in error. *Hancock* v. *Holbrook*, 112 U. S. 229 [28: 714]; *Halsted* v. *Buster, supra; Menard* v. *Goggan, supra.*

The judgment is reversed and the cause remanded with directions to set aside the judgment, and for such further proceedings as may not be inconsistent with this opinion.

---

[642] THE INSURANCE COMPANY OF NORTH AMERICA, *Plff. in Err.*,
v.
JAMIE S. GUARDIOLA ET AL.

(See S. C. Reporter's ed. 642, 643.)

Agents' letters, when not evidence—objections to depositions, how taken.

1. Letters written to the plaintiffs by their own agents are incompetent either in themselves, or in corroboration of the testimony of the agents, to prove the facts recited in the letters, against third persons.

2. Objections to copies of documents or memoranda, embodied in or annexed to depositions, may more properly be made by motion to suppress them before the trial, so as to afford opportunity to produce the originals, when those would be competent evidence.

[No. 159.]

Argued Jan. 9, 1889. Decided March 5, 1889.

IN ERROR to the Circuit Court of the United States for the Southern District of New York, to review a judgment for plaintiffs, in an action on a policy of insurance. *Reversed.*

The facts are stated in the opinion.

Mr. **John L. Cadwalader,** for plaintiff in error:

The court erred in admitting in evidence the memorandum of weights. Each was a copy; the originals were not produced.

Flood v. *Mitchell*, 68 N. Y. 507; *Sackett* v. *Spencer*, 29 Barb. 188; *Wightman* v. *Overhiser*, 8 Daly, 282.

To cure the error of admitting illegal evidence upon a trial the evidence should be stricken out and the jury distinctly instructed to disregard it.

Alexander v. *Osborn*, 21 N. Y. W. Dig. 299; *Hinckley* v. *N. Y. Cent. & H. R. R. Co.* 56 N. Y. 434; *First Unitarian Society* v. *Faulkner*, 91 U. S. 415–418 (23:283).

It is the exclusive province of the jury to pass upon questions of fact.

Vicksburg & M. R. Co. v. *Putnam*, 118 U. S. 545 (30:257); *U. S.* v. *Phila. & Reading R. Co.* 123 U. S. 113 (31:138); *Rucker* v. *Wheeler*, 127 U. S. 93 (31:105); *Lovejoy* v. *U. S.* 128 U. S. 173 (*ante*, 390.)

The assessment of damages rests with the jury only.

Graham, Pr. 290, 323; 3 Wait, Pr. 175; Thornton, Juries and Instructions, 116.

The amount to which a plaintiff may be entitled under the law and the facts must be found by the jury.

Field, Damages, 25; 2 Whittaker, Pr. 392–3; Sedgwick, Damages, 1, p. 22; 2, pp. 650–653; *Sioux City & Pac. R. Co.* v. *Stout*, 84 U. S. 17 Wall. 657 (21:745).

The court cannot take from the jury the right of weighing the evidence and determining what effect it shall have.

Tracy v. *Swartwout*, 35 U. S. 10 Pet. 80 (9:354); *Greenleaf* v. *Birth*, 34 U. S. 9 Pet. 299 (9:135); *Jewell* v. *Jewell*, 42 U. S. 1 How. 219 (11:108); *Hazewell* v. *Coursen*, 81 N. Y. 630.

Messrs. **George F. Edmunds** and **William W. Goodrich,** for defendants in error:

The plaintiff in error did not object on the specific ground that the original books should have been produced, nor was any notice given to produce the original books.

U. S. v. *McMasters*, 71 U. S. 4 Wall. 680 (18: 311); *Burton* v. *Driggs*, 87 U. S. 20 Wall. 125 (22:299); *Wood* v. *Weimar*, 104 U. S. 795 (26:782); *Noonan* v. *Caledonia Gold. Min. Co.* 121 U. S. 400 (30:1062).

Where it is necessary to prove particular facts, and an examination cannot be conveniently made in court, the results may be proved by a person who made the examination, the books being out of the State and beyond the jurisdiction of the court.

Burton v. *Driggs, supra; Bailey* v. *Johnson*, 9 Cow. 115; *Forrest* v. *Forrest*, 6 Duer, 137.

Mr. Justice **Gray** delivered the opinion of the court:

This was an action on a policy of insurance upon a cargo of sugar shipped at Sagua in Cuba for New York. After verdict and judgment for the plaintiffs, the defendant sued out this writ of error.

The principal controversy at the trial was whether the cargo shipped consisted of 531 hogsheads or of 368 hogsheads only.

Upon this question there was much conflicting evidence, and the plaintiffs introduced a number of depositions, taken under commission at Sagua, including those of the plaintiffs themselves as to what took place at their warehouse, and those of their shipping agents as to what took place at the port some twenty miles below. Annexed to the deposition of one of the plaintiffs were letters written to them by their shipping agents, at the time of the successive shipments, stating the number of hogsheads shipped. Upon these letters being offered in evidence by the plaintiffs, the defendant objected that they were irrelevant and incompetent; and duly excepted to the ruling of the court admitting them.

It is too clear for discussion, that these letters, written to the plaintiffs by their own agents, [643] were no part of the transaction of shipping the

sugar, but were mere reports by the agents to their principals, and were incompetent, either in themselves, or in corroboration of the testimony of the agents, to prove the facts recited in the letters, against third persons. *Freeborn* v. *Smith*, 69 U. S. 2 Wall. 160, 176 [17:922]; *Dwyer* v. *Dunbar*, 72 U. S. 5 Wall. 318 [18: 489]; *U. S.* v. *Corwin*, 129 U. S. 381 [*ante*, 710.]

Upon the exceptions to other rulings we give no opinion, because they may be presented in a different aspect upon another trial. To avoid misapprehension, it may be added that, according to the rule heretofore laid down by this court, objections to copies of documents or memoranda, embodied in or annexed to the depositions, might perhaps more properly have been made by motion to suppress them before the trial, so as to afford opportunity to produce the originals, when those would be competent evidence. *York Co.* v. *Cent. R. Co.* 70 U. S. 3 Wall. 107 [18:170]; *Blackburn* v. *Crawfords*, 70 U. S. 3 Wall. 175, 191 [18:186-192].

But the letters to the plaintiffs from their own agents were absolutely incompetent, and their admission in evidence clearly tended to prejudice the defendant with the jury. Upon this ground

The judgment of the Circuit Court must be reversed and the case remanded with directions to set aside the verdict and to order a new trial.

---

[683] JOHN BÉNÉ ET AL., *Appts.*,

v.

EMILE JEANTET.

(See S. C. Reporter's ed. 683-688.)

Letters patent — specification — pioneer invention — infringement.

1. Under section 4888, R. S., the specification must describe the invention and the manner and process of making, constructing, compounding and using it in such full, clear, concise and exact terms as to enable any person skilled in the art or science to which it appertains to make, construct, compound and use the same.

2. The broad construction claimed in this case for the patent as a pioneer and foundation invention in the art of refining hair cannot extend the rights of the patentee beyond the compositions of matter and processes which, as stated in the patent, embody his real invention.

3. To make out a case of infringement, there must be a preponderance of evidence in favor of complainants.

[No. 167]

Argued Jan. 18, 1889. Decided March 5, 1889.

APPEAL from a decree of the Circuit Court of the United States for the Southern District of New York, dismissing a suit for infringement of reissued letters patent for an improvement in the process of refining and bleaching hair. *Affirmed.*

The facts are stated in the opinion.

Mr. **Sam. Tro. Smith,** for appellants:

Béné, the pioneer inventor in the art of refining hair, is entitled to a broad claim and liberal construction.

Am. Bell Teleph. Co. v. *Spencer*, 8 Fed. Rep. 509; 126 U. S. 538 (31: 990); *Vogler* v. *Semple*, 7 Biss. 382; *Worswick Mfg. Co.* v. *Buffalo*, 20 Fed. Rep. 126; *Pickhardt* v. *Packard*, 22 Fed. Rep. 530; *Hammerschlag* v. *Seamoni*, 7 Fed. Rep. 584; *Rapp* v. *Bard*, 1 Fish. Pat. Cas. 196; *Standard Measuring Machine Co.* v. *Teague*, 15 Fed. Rep. 390; *Knapp* v. *Joubert*, 19 Blatchf. 148; *Stow* v. *Chicago*, 104 U. S. 547 (26: 816); *Webster Loom Co.* v. *Higgins*, 105 U. S. 580 (26: 1177).

It is enough if he describes his method with sufficient clearness and precision to enable those skilled in the matter to understand what the process is, and if he points out some practicable way of putting it in operation.

Mowry v. *Whitney*, 81 U. S. 14 Wall. 620 (20: 858:) *Klein* v. *Russell*, 86 U. S. 19 Wall. 433 (22: 116); *Goodyear Dental V. Co.* v. *Gardiner*, 3 Cliff. 408; *Union Sugar Refinery* v. *Matthiesson*, 3 Cliff. 639; *Corning* v. *Burden*, 56 U. S. 15 How. 252 (14: 683).

The specification is to be used as an aid in interpreting the claim.

Brooks v. *Fiske*, 56 U. S. 15 How. 212 (14: 665); *Hogg* v. *Emerson*, 52 U. S. 11 How. 587 (13: 824); *Turrill* v. *Mich. Southern etc. R. Co.* 68 U. S. 1 Wall. 491 (17: 668); *Seymour* v. *Osborne*, 78 U. S. 11 Wall. 516 (20: 33).

The term *equivalent* when used in regard to the chemical action of such fluids as can be discovered only by experiment, means equally good.

Hyndman v. *Roots*, 97 U. S. 224 (24: 975); *Clough* v. *Gilbert & B. Mfg. Co.* 106 U. S. 166 (27: 134).

Mr. **William P. S. Melvin,** for respondent:

The burden of proof is on the complainants to show an infringment.

Brooks v. *Jenkins*, 3 McLean, 453; *Chicago & N. W. R. Co.* v. *Sayles*, 97 U. S. 554 (24: 1053).

In deciding between contradictory expert testimony, the respective reasons, ability, knowledge and fairness of the experts are to be considered.

Waterbury Brass Co. v. *New York & B. Brass Co.* 3 Fish. Pat. Cas. 43; *Conover* v. *Rapp*, 4 Fish. Pat. Cas. 57; *Whipple* v. *Baldwin Mfg. Co.* 4 Fish. Pat. Cas. 29.

Mr. Justice **Lamar** delivered the opinion of the court:

This is a suit in equity brought in the Circuit Court of the United States for the Southern District of New York, by John Béné and Adolph Grünberg against Émile Jeantet, praying an injunction, accounting, and damages for an alleged infringement of reissued letters patent No. 8637, granted to Béné, March 25, 1879, on an application filed March 4, 1879, for an improvement in the process of refining and bleaching hair.

Counsel for complainant stated in the record that no claim is made in this suit for the bleaching of hair, except so far as the bleaching may [684] result incidentally from the process of refining; and the only issue presented by the pleadings, therefore, relates to the question of infringement so far as the process of refining hair is concerned, there being no issue raised as to the validity of the patent in any respect.

The nature and object of the invention are set forth in the specification as follows:

"This invention relates to the treatment of all kinds of coarse hair, which, in its natural

state, has little commercial value, and is entirely unfit for toilet uses and purposes. The said treatment serves, mainly, to refine the hair or reduce the diameter of the hairs and to render them more pliable and glossy; but it also serves to partially bleach the hair or lighten its color or tint and fit it to pass through any of the ordinary dyeing processes, whereby it may be given any shade or color desired or possible. In carrying out my invention, for the purpose of producing from the coarse, harsh hair above mentioned, a soft pliable hair of fine texture, I treat the said coarse hair to a bath composed of such chemicals or chemical substances as will dissolve away a portion of the surface of each hair, and thus reduce its diameter. I find that a solution of a chlorine salt dissolved in an excess of muriatic acid serves my purposes as a bath for this refining treatment. I claim as my invention—

"(1). The method of refining all grades of coarse hair, which consists in subjecting it to the action of chemicals, whereby the surface of each hair is corroded or dissolved away and its diameter reduced, substantially as set forth.

"(2). The method of refining coarse hair, which consists in subjecting it to the action of a bath composed of muriatic acid, in which is dissolved a chlorine salt, substantially as set forth.

"(3). The method of refining and bleaching all kinds and grades of coarse hair, which consists, first, in bathing and manipulating the same in a chemical bath, composed of acid and a chlorine salt, and then in a bleaching bath, composed of acids and bichromate of potash, substantially as and for the purpose set forth.

[685] "(4). The method of refining and bleaching all kinds and grades of coarse hair, which consists: *first*, in bathing and manipulating the same in a bath composed of acid and a chlorine salt, which refines the hair; *second*, subjecting the refined hair to a bath composed of acids and bichromate of potash; and *third*, subjecting the hair thus refined and bleached to the proper shade to a fixing bath composed of warm water, solution of muriate of tin, bisulphate of soda, and muriatic acid, which sets the color, substantially as set forth.

"(5). The method of refining and treating hair, which consists in first passing it through a refining bath composed of an acid and a chlorine salt; then, if desired or necessary, through bleaching and fixing baths, as above described; and, finally treating the hair so refined to a bath composed of water and ammonia, to remove all of its impurities, substantially as specified.

"(6). As a new article of commerce and manufacture, hair of fine texture produced from any grade of coarse hair, either animal or human, by the method of refining, substantially, as herein described."

The court below held that were it not for the latter part of this description the specification would fail to comply with the statute, and would be void for uncertainty. It therefore limited the patentee to his second claim, and accordingly ruled that under this specification "The patent is to be construed as one for a process of refining hair by treating it in a bath composed of a solution of chlorine salt dissolved in an excess of muriatic acid, and the claims are to be limited accordingly."

The court further found from the evidence produced in the case that the alleged infringement, the sole issue presented by the pleadings, had not been proven, and therefore dismissed the bill without prejudice to the right of the complainants to bring an action at law if they were so advised. An appeal from this decree brings the case here.

Under section 4888, R. S., the specification must describe the invention and the manner and process of "making, constructing, compounding, and using it in such full, clear, concise, and exact terms as to enable any person skilled in the art or science to which it appertains . . . to make, construct, compound, and use the same." [686] Tested by this requirement, the patent in suit cannot receive the broad construction for which complainants contend. Except as applicable to the second claim, the specification is not full and clear enough to give one skilled in chemistry such an idea of the particular kinds and character of the chemicals, or combination of chemicals, with the relative proportions of each, as would enable him to use the invention without having to resort to experiments of his own to discover those ingredients. The broad construction claimed for this patent as a pioneer and foundation invention in the art of refining hair cannot extend the rights of the patentee beyond the compositions of matter and processes which, as stated in the patent, embody his real invention. It is true, as appears upon the pleadings, that the appellant Bené was the first discoverer of a process of refining hair, and his patent, therefore, is entitled, within the limits just indicated, to a liberal construction. If therefore it was proved that the hair dealt in by the defendant was refined by substantially the same chemical action as that set forth in the second claim, the fact of infringement was established, and the complainants were entitled to the decree prayed for.

Upon the trial no direct testimony was offered by plaintiffs to show that the articles dealt in by the defendant were treated or refined by the patented process. The only fact upon which the plaintiffs relied was the correspondence of the articles proved to have been sold by defendant, in respect of smoothness, luster, and pliability, with the hair produced according to the patented process; which correspondence, it was contended, showed that both products resulted from the same method or equivalent method of preparation; and it was further insisted that the court was bound from that fact to conclude that refined hair, like that in question, could not be produced except by treating it in a bath composed of a solution of chlorine salt dissolved in an excess of muriatic acid, or a solution of their (chemical) equivalents.

To support this contention the plaintiff introduced an expert, Nathaniel S. Keith, who states that, whilst he had never attended any lectures [687] on the subject of chemistry, he had pursued his studies in the chemical laboratory of his father, a practicing physician and a manufacturing chemist. He had given hair special consideration during three or four years past, and had made experiments upon the processes of refining and bleaching hair with reference to this suit and another legal controversy. In his

testimony he asserts, substantially, that the defendant's article cannot be produced, except by a treatment in a solution of chlorine salt and muriatic acid, or their (chemical) equivalents. In response to the question, "What other substance is there, if any, except chlorine and its compounds, which will corrode or dissolve away the surface of the hair so as to reduce the size or diameter without essentially destroying the hair?" he answers: "I have no knowledge of any other." Again: "My opinion is, that any method under which, by the action of chemicals, the surface of hair is dissolved or corroded away so as to reduce its diameter comes within the province, or falls within one or more of the claims, of the said patent."

To repel this contention the defendant called as an expert witness one Charles Marchand, who stated that he had been engaged in chemical studies for twenty-four years, having graduated at a school of arts and manufactures in Paris in 1871, from which time his business had been that of a manufacturing chemist, to which, after he came to this country in 1878, he added the occupation of analytical chemist. He testifies that in his studies and business he has had much to do with bleaching and refining human hair, and other hair; has known for many years oxidizing agencies for bleaching or refining hair; first saw hair reduced in diameter by the use of chemicals twelve years ago in Paris by a chemist; and that he had made a number of experiments in the treatment of hair by subjecting it to a refining process entirely different from that described in the patent; and in corroboration of his testimony he produced several samples of refined hair, which he stated he had refined by the use of different chemicals from those mentioned in the patent.

The first was treated by a chlorine gas solution in pure water, and then by a solution of peroxide of hydrogen.

[688] The second was a solution of permanganate of potash in water with sulphuric acid and muriatic acid in proper proportions.

The third was a solution of sulphurous acid in water, and also a solution of permanganate of potash.

The fourth was treated by one of the same methods. Another specimen was treated by a concentration of peroxide of hydrogen.

To break the force of this testimony, Keith was recalled, and, upon many points, contradicted Marchand's statements. He testified that he had made experiments according to the methods described by Marchand, and found them failures, and the hair subjected to them worthless and unrefined.

The testimony of these two witnesses is conflicting. But the testimony of Marchand relates to facts declared to be within his knowledge and experience; whilst that of Keith is largely the assertion of a theory and a presentation of arguments to show that the facts testified to by Marchand cannot exist. The experiments which Keith said he had made according to Marchand's formula, and which failed to produce refined hair, were, as he admitted, his first experiments for that purpose; whilst those made by Marchand were the results of twelve years of practice, and attested themselves by the specimens produced.

We think the complainants did not make out a case of infringement. There is not a preponderance of evidence in their favor.

The decree of the Circuit Court is therefore affirmed.

KATE W. GOODWIN ET AL., *Appts.*, [601
v.
ELEANOR FOX ET AL.

(See S. C. Reporter's ed. 601-641.)

Exception—competency of witnesses—settlement—appeal—interest.

1. The exception that the master refused to suppress depositions will be overruled, where it nowhere appears by the record that any objection was made before the master to the testimony.
2. In section 858 of the Revised Statutes of the United States, in regard to the competency of witnesses, the words "in all other respects" mean "in all other respects" than those provided for in so much of the section as precedes the word "*Provided*," and does not qualify the clause which forms the proviso.
3. Under the circumstances of this case, *held* that the parties could not go behind a settlement made between them as to the amount due from one to the other.
4. Where the parties interested in the allowance of an amount made by the master have not appealed from the decree, the allowance must stand.
5. Under the Statute of Illinois, creditors should be allowed interest at 6 per cent per annum, for moneys after they become due.

[No. 168.]

Argued Jan. 18, 21, 1889. Decided March 5, 1889.

APPEAL from a decree of the Circuit Court of the United States for the Northern District of Illinois, in favor of plaintiffs in an action for an accounting and foreclosure and sale. *Reversed.*

The facts are stated in the opinion.

Messrs. **Chas. H. Wood** and *John N. Jewett*, for appellants:

The testimony of defendant, I. Willard Fox, was incompetent as against the complainant in the cause.

Stein v. *Bowman*, 38 U. S. 13 Pet. 219 (10: 134); *Bridges* v. *Armour*, 46 U. S. 5 How. 94 (12; 65); R. S. U. S. § 858; *Eslava* v. *Mazange*, 1 Woods, 625; *Merrill* v. *Atkin*, 59 Ill. 20; *Stevens* v. *Hay*, 61 Ill. 399; *Langley* v. *Dodsworth*, 81 Ill. 86; *Crane* v. *Crane*, 81 Ill. 169; *Marshall* v. *Peck*, 91 Ill. 187; *Bragg* v. *Geddes*, 93 Ill. 51; *Potter* v. *Third Nat. Bank*, 102 U. S. 163 (26: 111); *King* v. *Worthington*, 104 U. S. 44 (26: 652).

The settlement embraced in the agreement is conclusive upon the defendants; and no set-offs or discounts that may have existed previous to that date can be allowed.

Casey v. *Galli*, 94 U. S. 680 (24: 170); *Lainson* v. *Tremere*, 1 Ad. & El. 792, 28 Eng. C. L. 214; Bigelow, Estoppel, 3d ed. 802; *Nevett* v. *Berry*, 5 Cranch, C. C. 291; *Bowman* v. *Taylor*, 2 Ad. & El. 290; *Horton* v. *Westminster Improvement Comrs.* 7 Exch. 780.

A party to the record in the federal court was not a competent witness in his own behalf, before the enactment of the statute.

Stein v. *Bowman*, and *Bridges* v. *Armour*, *supra*.

In Illinois a party is incompetent as a witness in his own behalf, where the adverse

party is suing or defending as executor, guardian, devisee or heir, as to any matter occurring before the death of the testator or intestate.

Merrill v. *Atkin*, *Stevens* v. *Hay*, *Langley* v. *Dodsworth*, *Crane* v. *Crane*, *Marshall* v. *Peck* and *Bragg* v. *Geddes*, *supra*.

Parties are estopped to deny the reality of the state of things which they have made appear to exist, and upon which others have been led to rely.

Casey v. *Galli*, *Lainson* v. *Tremere*, Bigelow, Estoppel, *Nevett* v. *Berry*, and *Bowman* v. *Taylor*, *supra*.

Where an account is settled by the parties themselves, and where there is no unfairness and where all the facts are equally known to both sides, their adjustment is final and conclusive.

Hager v. *Thompson*, 66 U. S. 1 Black, 80 (17: 41); *Bennett* v. *Walker*, 100 Ill. 525.

Mr. **William C. Goudy**, for appellees:

There is no estoppel as to the amount due, because a sum is stated in the agreement.

Jones, Mortg. § 613; *Farnum* v. *Burnett*, 21 N. J. Eq. 87; *Calkins* v. *Long*, 22 Barb. 97; *Parker* v. *Parmele*, 20 Johns. 130; *Feldman* v. *Gamble*, 26 N. J. Eq. 494; *Craver* v. *Wilson*, 14 Abb. Pr. N. S. 374; Herman, Mort. § 298; *McCrea* v. *Purmort*, 16 Wend. 460; *McKinster* v. *Babcock*, 26 N. Y. 378; *Esterly* v. *Purdy*, 50 How. Pr. 350; Jones, Mortg. § 384; *Price* v. *Gover*, 40 Md. 102; *Athol Sav. Bank* v. *Pomroy*, 115 Mass. 573; *Jones* v. *Jones*, 20 Iowa, 388; *Conwell* v. *Clifford*, 45 Ind. 392; *White* v. *Lucas*, 46 Iowa, 319.

The reason why a good title cannot be obtained *pendente lite* is that the court having acquired jurisdiction will retain its power over the subject matter of litigation, without regard to the action of the parties to the suit, and third persons dealing with them.

Bellamy v. *Sabine*, 1 DeG. & J. 578; *Dovey's App.* 97 Pa. 153; *Center* v. *Planters & M. Bank*, 22 Ala. 757.

As to questions of notice see *Doyle* v. *Teas*, 5 Ill. 202; *Chicago, R. I. & P. R. Co.* v. *Kennedy*, 70 Ill. 350, and *Merrick* v. *Wallace*, 19 Ill. 489.

The proviso to section 858 of the Revised Statutes does not incapacitate a witness where the suit is against codefendants, of whom only one is dead, when the contract was made either with the living codefendant or with the living and the dead concurrently.

French v. *Hayward*, 16 Gray, 512; *Doody* v. *Pierce*, 9 Allen, 144; *Hubbell* v. *Hubbell*, 22 Ohio St. 208; *Hall* v. *State*, 39 Ind. 301; *Gavin* v. *Buckles*, 41 Ind. 528; *Isenhour* v. *Isenhour*, 64 N. C. 640; *Leaptrot* v. *Robertson*, 37 Ga. 586; *North Ga. Min. Co.* v. *Latimer*, 51 Ga. 47.

So, when the deceased contracting party was represented in the bargain by an agent who is capable of testifying, then the other contracting party, unless expressly excluded by the statute, may be a witness.

Brown v. *Brightman*, 11 Allen, 227; *Hildebrant* v. *Crawford*, 6 Lans. 502; *Payne* v. *Elyea*, 50 Ga. 395; *Jacquin* v. *Davidson*, 49 Ill. 82.

In Vermont and Massachusetts it is held the statute does not exclude, in any cases against surviving partners or contractors.

Read v. *Sturtevant*, 40 Vt. 521; *Hayward* v. *French*, 12 Gray, 453; *Goss* v. *Austin*, 11 Allen, 525.

Mr. Justice **Blatchford** delivered the opinion of the court: [602]

On the 20th of February, 1869, a written agreement was executed by Samuel H. Fox and I. Willard Fox, to which was appended a memorandum signed by Samuel H. Fox, the papers being as follows:

"Whereas, I. Willard Fox is indebted to Samuel H. Fox and Henry W. Fox, partners doing business under the firm name and style of Fox & Co., in the sum of seventy thousand dollars ($70,000), over and above all discounts and set-offs of every name and nature; and whereas, said Fox & Co., at the request of said I. Willard Fox, have taken up and satisfied, or [are] about to take up and satisfy, certain other [603] of the indebtedness of said I. Willard Fox, some of such indebtedness, and to the amount of about sixteen thousand dollars ($16,000), more or less, being satisfied by payment thereof, and to the amount of about thirty thousand dollars ($30,000), more or less, being so satisfied by payment at the rate of fifty cents on the dollar, whereby the said I. Willard Fox has become further indebted to said Fox & Co.; and whereas, the said I. Willard Fox has sold and conveyed to the said Samuel H. Fox all and singular the stock of goods, wares and merchandise, with the store fixtures, in the City of Chicago, including therewith his notes, books and accounts of every name, nature and description, and also the premises known as No. 376 North La Salle Street, being lot two (2), in block twenty (20), in Bushnell's Addition to Chicago, Illinois, in said City of Chicago, with power forthwith, at such times and in such manner as he, said Samuel H. Fox, shall deem best, to sell and collect and convert the said goods, wares, merchandise, fixtures, notes, accounts and premises into money, and apply the proceeds to the payment of said indebtedness to said Fox & Co., both said original indebtedness and that so taken up by them, at the rate paid therefor, with such interest added thereto as the said Samuel H. Fox or Fox & Co., shall have to pay thereon, or on any portion thereof, and has also conveyed to said Samuel H. Fox his farm in Lake County, Illinois, known as the Lake Zurich farm; Now, therefore, the said Samuel H. Fox agrees, that if the said I. Willard Fox shall and will, within six months from the date hereof, pay the entire amount of each name and kind of said indebtedness, or such portion thereof as remains at that time unpaid, then he, said Samuel H. Fox, shall and will reconvey the said Lake Zurich farm to said I. Willard Fox, but in default of such payment it is hereby agreed by the parties hereto that the said Samuel H. Fox may immediately foreclose the certain mortgage comprised in said conveyance of said Lake Zurich farm and this agreement.

"And the said I. Willard Fox hereby agrees, that, in case proceedings for such foreclosure be commenced, that he will interpose no default thereto, nor attempt, by injunction, bill in equity, or in any other way, to hinder or defeat the same.

"Witness the hands and seals of the said [604]

Samuel H. Fox and I. Willard Fox, this twentieth day of February, A. D. 1869.

"Samuel H. Fox. [Seal.]
"I. Willard Fox. [Seal.]

"And the said Samuel H. Fox hereby agrees to release a certain mortgage which he has on a portion of said Lake Zurich farm, the indebtedness secured by said mortgage having become merged in said debt of seventy thousand dollars. "SAMUEL H. FOX."

By deeds in fee simple, I. Willard Fox and his wife conveyed to Samuel H. Fox the North La Salle Street lot and the Lake Zurich farm, mentioned in the above agreement, simultaneously with its execution.

On the 17th of February, 1877, Kate W. Fox brought a suit in equity, in the Circuit Court of the United States for the Northern District of Illinois, against I. Willard Fox and his wife. Kate W. Fox was the widow of Henry W. Fox, who, with Samuel H. Fox, composed the firm of Fox & Co. Henry W. Fox had died in 1876, and by his will Kate W. Fox was made his sole executrix and sole devisee. In her bill she set forth the contents of the above agreement, without stating that it was in writing. The bill averred that, in pursuance of the agreement, Fox & Co. paid the $16,000 and the $30,000 of the indebtedness of I. Willard Fox, named in it; that I. Willard Fox and his wife executed and delivered to Samuel H. Fox deeds in fee simple of the Lake Zurich farm and the La Salle Street lot; and that I. Willard Fox assigned to Samuel H. Fox the goods, wares and merchandise, store fixtures, notes and accounts, mentioned in the agreement.

The bill also alleged that it was then further agreed between I. Willard Fox and Fox & Co. that the former should carry on his business, which was at Chicago, Illinois, in connection with the said stock of goods, wares and merchandise, notes and accounts, as though no such assignment thereof had been made to Samuel H. Fox; that Fox & Co., who were manufacturerers of glass, in the State of New York, [605] should advance and furnish to I. Willard Fox goods in the way of his business, from time to time, as he should need and they should be able; that the price or value of the goods so furnished should be added to the indebtedness so due from I. Willard Fox to Fox & Co., and the former should apply the proceeds and avails of the business, as he should realize the same, to the payment of such indebtedness, until such future time as should be agreed upon by the parties, at which time he should turn over and deliver to Samuel H. Fox the merchandise which should then be on hand, the store fixtures, and the notes and accounts then uncollected, the proceeds and avails of which should then be applied by Samuel H. Fox towards the payment of the indebtedness which should then be due from I. Willard Fox to Fox & Co.; and that the original agreement should in all other respects remain binding.

The bill further averred that, in pursuance of the last mentioned agreement, I. Willard Fox continued to carry on his business until about February 20, 1870, that is, for about one year, in connection with the said stock of goods, store fixtures, and notes and accounts; that, during that period, Fox & Co. furnished to him merchandise, in the way of his business, to the amount of about $24,000; that, at the expiration of that period, he, in pursuance of that agreement, turned over and delivered to Samuel H. Fox the stock of goods, store fixtures, notes and accounts, then on hand, of the value of $27,843.07, which amount was then credited to him and applied on his indebtedness then due to Fox & Co.; that, after the making of the last mentioned agreement, and while I. Willard Fox was so carrying on business, he paid out of its avails, upon his indebtedness to Fox & Co., the sum of about $10,000; that Samuel H. Fox, some time before September 1, 1875, sold the La Salle Street lot and realized from it about $14,000, which amount was credited upon the indebtedness of I. Willard Fox to Fox & Co.; that the said sums of $27,843.07, $10,000, and $14,000, was all that had ever been paid on said indebtedness; and that there was due to the plaintiff, at the time of filing the bill, on account of said indebtedness, about $70,657, besides interest.

The bill further alleged that, on or about [606] September 1, 1875, Samuel H. Fox and Henry W. Fox dissolved their partnership, and it was agreed that the debt due from I. Willard Fox to Fox & Co., and all securities therefor, should thereafter belong to Henry W. Fox; that Samuel H. Fox executed and delivered to Henry W. Fox a deed in fee simple of the Lake Zurich farm, a description of which by metes and bounds was given in the bill; and that there was due to the plaintiff, as such executrix and devisee, from I. Willard Fox, $108,600, principal and interest.

The bill waived an answer on oath, and prayed for an account of the amount due to the plaintiff for principal and interest on the security of the Lake Zurich farm; that the defendants be decreed to pay that amount, the plaintiff offering to reconvey the premises to them on such payment; and that, in default of such payment, the defendants be barred and foreclosed of all equity of redemption in and to such mortgaged premises. The bill contained a prayer for general relief, although it did not pray specifically for the sale of the Lake Zurich farm; nor did it treat the La Salle Street lot as being subject to a like mortgage with the Lake Zurich farm, but only as being subject to be sold by the grantee under the power contained in the agreement, the proceeds of sale to be applied upon the indebtedness.

On the 21st of April, 1877, I. Willard Fox and his wife put in an answer to the bill. It denies the indebtedness of $70,000, but admits that a paper drawn up at the instance of Samuel H. Fox stated the indebtedness at that amount. It also avers that, prior to February 20, 1869, I. Willard Fox had been engaged at Chicago for several years in selling paints, oils and window glass; that during that time he had sold for Fox & Co. large quantities of window glass made by them, such sale being upon commission; that he never regarded himself as purchasing the glass in the ordinary way; that a short time prior to February 20, 1869, he became embarrassed; that then Fox & Co., under the pretense of making a favorable settlement with some of his creditors, forced him to enter into an agreement, wherein he was

607] apparently made to say that he owed Fox & Co. the $70,000, but which did not state truly such indebtedness, the amount being made up for a specific purpose on the part of Fox & Co., without his consent; that, in making up the $70,000, interest was, without his consent, calculated for several years back on all pretended balances apparently due to Fox & Co., every three months during each year, thereby compounding interest; that the amount of such interest was $20,000 or $30,000; that after the agreement was signed, Fox & Co. allowed him to go on in business, using his own name, for about the period of one year, but the business was really theirs, and he turned over to them his store and its contents, and all the debts due to him, on or about February 20, 1869, the contents of the store being then of the value of over $60,000; that, in equity, under such arrangement, that property ought to go to the cancellation of the indebtedness stated in the agreement, and Fox & Co. ought to be charged in the accounting with the property so delivered to them, at its fair value; that Fox & Co. pretend that the business was conducted by him after February, 1869, and, because there were losses in it to the amount of $15,000, he ought to suffer that loss, when the business was really that of Fox & Co., and the adjustment ought to be made at the time of the turning over of the store and its contents, and of his property, to Fox & Co., and he ought to be allowed to set off against any indebtedness of his to Fox & Co. the amount of property so turned over to them; that he was the owner in fee simple absolute of the land described in the bill; that whatever debt is due to Fox & Co. is a lien upon the same, including the La Salle Street lot, in the nature of a mortgage, and the land ought in equity to be subjected to such lien, if any indebtedness is proved to exist in favor of Fox & Co.; and that the plaintiff stands in no different relation to him, in regard to such indebtedness, from that occupied by Fox & Co., and has only the same rights and interest in and to such security which Henry W. Fox or Fox & Co. had.

The answer asks that an accounting may be had between the parties before a master, and avers that all indebtedness from I. Willard Fox to Fox & Co. has been paid; and that both the 608] Lake Zurich farm and the La Salle Street lot are free from any lien in favor of Fox & Co. or of the plaintiff. It avers that the goods furnished by Fox & Co. to I. Willard Fox, after the 20th of February, 1869, were the goods of Fox & Co., and he conducted the business for them; that the indebtedness held against him by other persons, and which was settled by Fox & Co., amounted to $24,000, and was settled for about $12,000 by Fox & Co.; that he also owed the First National Bank about $15,000, which was paid out of the proceeds of a loan of $6,000 made on the La Salle Street lot, and the rest of it out of the collections, etc., due to I. Willard Fox; and that such indebtedness having been so settled out of the La Salle Street lot and a portion of the property turned over by him to Fox & Co., he ought to have the Lake Zurich farm free from incumbrance, because of the large surplus which was left in the hands of Fox & Co. after paying such outstanding debts. The answer also avers that he will rely upon the Statute of Illinois in regard to usury.

A replication was filed to this answer.

On the 26th of October, 1877, the plaintiff filed an amended bill, under an order made on that day, giving her leave to do so, and requiring the defendants to answer within thirty days. The amended bill is a full and complete bill in itself. It contains mainly the same averments as the original bill, but has some variations and additions. One addition is a statement of the contents of the memorandum signed by Samuel H. Fox, appended to the agreement, which was not contained in the original bill. There is also added a statement that Samuel H. Fox did, on the 5th of October, 1869, release and discharge of record the mortgage so held by him on a portion of the Lake Zurich farm. It states the amount of goods furnished by Fox & Co. to I. Willard Fox, during the time from February 20, 1869, until some time in December, 1869, at $12,999.64, instead of $24,000; and that the property, amounting to $27,343.07, was turned over and delivered to Fox & Co. in December, 1869, instead of in February, 1870. It also states that the indebtedness mentioned in the agreement as $16,000 was in fact only $15,000, and was due to the First National Bank of Chicago; that, after the making of the agreement and the [609] conveyance of the La Salle Street lot to Samuel H. Fox, he, with the knowledge of I. Willard Fox, raised, by mortgage on that lot, about $6,000, which was handed over to I. Willard Fox and paid by him on the indebtedness to the bank, and that afterwards, and during the time that he carried on the business after February 20, 1869, he paid to the bank the remainder of the debt due to it, out of the avails of the business and of collections of the notes and accounts; that the indebtedness estimated in the agreement at about $30,000, due to other parties, was only about $24,000 or less, and Fox & Co. compromised and paid it in full by paying altogether the sum of about $10,971.39; that, about the time that Samuel H. Fox mortgaged the La Salle Street lot for $6,000, he effected an insurance upon the improvements upon it for the same amount, and afterwards the improvements were destroyed by fire, and the insurance was applied in discharge of the mortgage; that, on the 25th of September, 1875, Samuel H. Fox conveyed the La Salle Street lot to Henry W. Fox for the sum of $8,000, which amount was then credited upon the indebtedness of I. Willard Fox to Fox & Co.; that the $27,343.07, which was the value of the stock of goods, store fixtures, notes and accounts, turned over to Samuel H. Fox in December, 1869, and the $8,000 realized from the sale of the La Salle Street lot, is all that has ever been received by Fox & Co. on the debt from I. Willard Fox to them; and that there was due to the plaintiff at the time of the filing of the amended bill, on account of such debt, about $60,000, besides interest.

The amended bill states the amount due to the plaintiff, as executrix and devisee, from I. Willard Fox, at about $100,000, principal and interest, instead of $103,600. It waives an answer on oath, and its prayer is the same as that of the original bill, and it does not treat the La Salle Street lot as subject to a lien in favor of the plaintiff.

No answer to such amended bill appears in the record, nor is there any stipulation that the answer to the original bill shall stand as the answer to the amended bill.

On the 10th of September, 1878, an order was [610] made referring the cause to Mr. Henry W. Bishop as a master, to take proofs and report the same to the court, together with the amount due to the plaintiff.

On the 11th of February, 1880, an order was made, modifying such order of reference, by directing the master to report the testimony taken by him, and not his conclusions thereon.

Plenary proofs were taken in the cause, in July, 1877, November, 1878, September, 1879, November, 1879, December, 1879, and February, 1880. Samuel H. Fox gave a deposition in July, 1877, a second in September, 1879, and a third in December, 1879. I. Willard Fox gave a deposition in November, 1878, a second in November, 1879, and a third in February, 1880. Robert B. Merritt, who had been the book keeper and cashier of I. Willard Fox from May, 1867, till the summer of 1869, gave a deposition in September, 1879, and a second in December, 1879.

In July, 1880, the cause was heard on pleadings and proofs; but before any decision was made, and on November 13, 1880, the plaintiff, by leave of the court, amended her bill by inserting an averment to the effect that the agreement of February 20, 1869, contained a recital that I. Willard Fox had sold and conveyed to Samuel H. Fox the La Salle Street lot, the proceeds thereof to be applied towards payment of the indebtedness from I. Willard Fox to Fox & Co.; that by such agreement that lot was not in any event to be reconveyed to I. Willard Fox; that the plaintiff had sold and conveyed the lot; and that, being willing to do what was just and equitable, she offered to credit and allow to I. Willard Fox the amount for which she had sold the lot, or otherwise its value, in reduction of the sum due to her from I. Willard Fox.

On the 23d of November, 1880, the defendants filed an answer to the amended bill as amended on November 13, 1880. This appears to be a full answer, not only to the amendments of November 13, 1880, but to the amended bill filed October 26, 1877. This answer avers that, on February 20, 1869, I. Willard Fox and his wife executed to Samuel H. Fox a deed conveying the Lake Zurich farm, and another [611] deed conveying the La Salle Street lot; and that at the same time the agreement of February 20, 1869, was executed by Samuel H. Fox and I. Willard Fox, and the memorandum appended was executed by Samuel H. Fox. The answer also avers, that prior to 1857, Samuel H. Fox and I. Willard Fox were partners in business in the manufacture of glass, in the State of New York; that I. Willard Fox sold out his interest in the business to Henry W. Fox and retired; that, thereupon, Samuel H. Fox and Henry W. Fox, who were brothers of I. Willard Fox, became partners and conducted the business under the name of Fox & Co., and I. Willard Fox removed to Illinois; that the affairs of the firm in which I. Willard Fox was such partner, and his business transactions with the new firm, had never been settled; that in the year 1865, I. Willard Fox, at the request of Fox & Co., undertook to act as their agent for the sale of glass in Chicago, and was to receive as compensation a certain commission; that he received from them large amounts of glass and remitted the proceeds to them from time to time, and the business was thus conducted until about the first of January, 1869, when he became embarrassed, and, under a judgment and execution against him in favor of the First National Bank of Chicago, his goods, and the glass then on hand, belonging to Fox & Co., for sale on commission, were seized, and the store was closed; that Samuel H. Fox then came to Chicago and acted for Fox & Co.; that, by agreement with I. Willard Fox, Fox & Co. assumed the payment of the debt to the First National Bank, and the goods were released, and Samuel H. Fox, for Fox & Co., took possession of the goods belonging to I. Willard Fox, and of those belonging to Fox & Co.; that Samuel H. Fox also undertook to satisfy the other creditors of I. Willard Fox; that the latter was unable to pay more than fifty cents on the dollar, and, for the purpose of doing so, and also of placing Fox & Co. in a situtaion whereby they could make it appear to their creditors that they had large assets in Illinois, Samuel H. Fox prepared a statement of the account of Fox & Co. against I. Willard Fox, showing an apparent indebtedness of about $68,000, besides an apparent mortgage of $15,000 from him to them, and demanded of him that [612] he should make an absolute conveyance of the Lake Zurich farm and the La Salle Street lot; that he denied the correctness of such account and at first refused to make the conveyances, but was induced to execute them, provided Samuel H. Fox would execute the instrument of February 20, 1869, as a condition of defeasance, and upon the verbal assurance of Samuel H. Fox that Fox & Co. would not insist upon the payment of the $70,000 named in it, or of any sum other than that which should be found to be due from I. Willard Fox to Fox & Co., on a just, fair and equitable settlement; that the defendants asserted at the time that there was nothing due on the transactions covered by the account; that, after the deeds and the agreement were made, Samuel H. Fox, for Fox & Co., retained possession of the goods, store fixtures, notes and accounts, and conducted the business in the name of I. Willard Fox until December, 1869, and during that time received the proceeds arising from the collections of the notes and accounts, as well as the goods; that, at the time of such transfer to Fox & Co., there was in the store glass belonging to them, of the value of over $30,000, besides other goods of over the value of $30,000, and notes and accounts, good and collectible, to the amount of about $15,000, belonging to I. Willard Fox; that, during the time the business was so being conducted by Fox & Co., in 1869, they paid the debt to the First National Bank, partly from the proceeds arising from the conduct of the business and partly from money borrowed upon the La Salle Street lot, which was afterwards refunded to them by insurance money collected upon the building standing upon the lot, and which had been destroyed by fire; that they also paid to the other creditors of I. Willard Fox, in full satisfaction of the debts due to them, $10,971.40; that there had been no settlement of the matters between Fox & Co.

and I. Willard Fox since February 20, 1869; that there is nothing due from him to Fox & Co.; that the La Salle Street lot was conveyed, like the Lake Zurich farm, as security; that, if such lot has been sold pending the suit, its purchaser has taken it with notice of the equitable rights of the defendants; that they claim a reconveyance of the Lake Zurich farm and the
[313] La Salle Street lot upon the payment of the amount, if any, due to Fox & Co. from I. Willard Fox; and that Samuel H. Fox is a necessary party to the litigation.

On the 8th of December, 1880, the defendants, by leave of the court, filed a cross bill against the plaintiff, who had then become Kate W. Goodwin by her intermarriage with Charles S. Goodwin, and against her husband, and against Sarah E. R. Smith, who had become the purchaser of the La Salle Street lot, and her husband, Charles M. Smith. The cross bill sets forth the prior proceedings in the original suit, and prays that the original bill and the answer to it, and the amended bill filed October 26, 1877, and the amendment to it, filed November 13, 1880, and the answer filed November 23, 1880, may be taken as a part of such cross bill.

The cross bill contains, in substance, the material averments of the answers before filed, with the further statement that, in December, 1869, the remainder of the stock on hand in the store of I. Willard Fox was sold for the sum of about $28,000, and the money received by Fox & Co.; that the money received during the time the store was conducted by Fox & Co., from the time they took possession to the time it was closed in December, 1869, amounted to more than $50,000; that Fox & Co. were liable to I. Willard Fox for the amount of the glass returned to Fox & Co. at the time they took possession of the store, and also for the money received from the notes and accounts and the sale of glass during the time the business was conducted by Fox & Co.; that such amounts would more than pay any charges of Fox & Co. against I. Willard Fox; that, about the first of September, 1875, Samuel H. Fox and Henry W. Fox dissolved partnership, and the former conveyed to Henry W. Fox the said real estate, but the latter had full notice of the rights and equities of the cross plaintiffs in the premises, and was not a *bona fide* purchaser thereof; that Kate W. Goodwin and her husband, on the 7th of April, 1880, conveyed the La Salle Street lot to Sarah E. R. Smith; and that she received the conveyance of it with notice of the rights and equities of the cross plaintiffs to the premises, and pending the suit.

[314] The cross bill waives an answer on oath, and prays for an account of all matters between Fox & Co. and I. Willard Fox, and between Samuel H. Fox as surviving partner of Fox & Co. and I. Willard Fox, and for a decree against Samuel H. Fox as the surviving partner of Fox & Co., for the amount that may be due from him as such surviving partner to I. Willard Fox, and also for a decree against Kate W. Goodwin, requiring her and her husband to reconvey the Lake Zurich farm, and for a decree against Sarah E. R. Smith requiring her and her husband to reconvey the La Salle Street lot, and that, if it shall appear that there is any sum due from I. Willard Fox to Samuel H. Fox as surviving partner of Fox & Co., or to Kate W. Goodwin, a decree be entered requiring a reconveyance of such real estate on the payment of the amounts found to be due from I. Willard Fox; and for general relief.

On the 20th of December, 1880, Kate W. Goodwin and her husband answered the cross bill. Their answer contains the material averments found in the original bill and the amended bills, and in addition alleges, that the defendants in the cross suit were not parties to the agreement of February 20, 1869, or to the transactions out of which the same arose; that it is incompetent for I. Willard Fox to show either a want of consideration or a failure of the consideration upon which such agreement was founded; that, as I. Willard Fox wholly failed to comply with the terms of such agreement, by making payment within the six months therein limited, and the property was thereafter conveyed to Henry W. Fox in consideration of his interest in the assets of Fox & Co., and the same was thereafter devised to Kate W. Goodwin, I. Willard Fox is estopped from denying that the $70,000 recited in the agreement was due at its date; that when I. Willard Fox retired from his partnership with Samuel H. Fox, in August, 1857, he left the concern largely in debt, and left Samuel H. Fox to close up the old business, collecting what he could and paying the debts; that, in the mean time, the new firm advanced money to I. Willard Fox, until April, 1862, when the old matters were settled up, and I. Willard Fox acknowledged in writing an indebtedness to Fox & Co. of $5,584.82, on his personal account, besides between $7,000 [615]
and $8,000, which that firm had then advanced or were to advance to him, on security to be given on the Lake Zurich farm; that the glass shipped to I. Willard Fox by Fox & Co., in 1865, and for several years afterward, was sold to him, and was not shipped to him on commission; that in 1869, I. Willard Fox was indebted to Fox & Co. in nearly $100,000 for glass sold to him by them, from 1865 to 1869; that there was no dispute about the amount due to Fox & Co. by I. Willard Fox, which was stated at $70,000 in the agreement of February 20, 1869; that, in fact, $20,000 more was due from him to them at that time, but which was given up to him; that he did not then dispute the amount due Fox & Co., and was not coerced into making the deeds and agreement; that Samuel H. Fox did not give at the time the reasons for making them alleged in the cross bill; that the accounts of Fox & Co. were examined, and the amount agreed upon, and the deeds and agreement made, and six months allowed for I. Willard Fox to redeem, because he represented that he could do thenceforth a prosperous business by regaining his stock and store; that, between January and December, 1869, Fox & Co. shipped to him more than $12,000 worth of glass; that it was amicably agreed, in December, 1869, that the business should be closed; that $50,000 was not received from the sale of the stock of I. Willard Fox, between January and December, 1869, and whatever sum was received was received and used by him; that the stock of goods was turned over to and taken possession of by Fox & Co., in December, 1869, and not before; that the best was done with it that could be done, and they realized from it only $27,343.07, which

had been fully accounted for by glass furnished to and debts paid for I. Willard Fox by Fox & Co. between January and December, 1869; that such transaction did not materially reduce the amount due on the agreement; that when the store was finally closed no part of the glass was returned to Fox & Co., but the whole was sold and the total amount received is included in the sum before named; that I. Willard Fox is not entitled to be credited with any more money than the credit he has already received; that Sarah E. R. Smith paid full value for the [616] La Salle Street lot, and is entitled to be protected as a *bona fide* purchaser for value without notice; that, as Kate W. Goodwin has offered, by her amended bill, to allow to I. Willard Fox, upon her claim against him, the amount she received from the sale of the lot, the title should not be drawn in question in the suit; and that the lot was not involved in the pleadings at the time Sarah E. R. Smith purchased it, and therefore she was not a purchaser of it *pendente lite*.

On the 23d of December, 1880, a replication was filed to the answer to the amended bill.

On the third of January, 1881, Sarah E. R. Smith and her husband filed their answer to the cross bill, averring that Sarah E. R. Smith took the conveyance of the La Salle Street lot, on her purchase of it from Kate W. Goodwin and her husband, without any notice of any rights or equities of the plaintiffs in the cross bill, and paid therefor $6,625 in cash, which was its reasonable value, and paid it before the cross bill was filed, and before any notice that anyone else than Kate W. Goodwin claimed any interest in it; that the title to the lot was in no way involved in the pleadings in the cause at the time of such purchase, nor was the agreement of February 20, 1869, set forth in the cross bill, nor did she or her husband have any notice thereof; and that they cannot be compelled to reconvey the lot, nor can they be in any manner affected by the state of accounts between I. Willard Fox and Fox & Co.

Replications to the two answers to the cross bill were filed on the 5th of January, 1881.

On the 7th of January, 1881, an order was made in the original and cross suits, referring the cause to Mr. Henry W. Bishop, as a master, to take evidence, and to make and state an account between Fox & Co. and I. Willard Fox, and to report the same, with his findings, to the court.

Under this order of reference, the master took proofs in February, 1881, May, 1881, and July, 1881, a third deposition of Robert B. Merritt being taken in May, 1881, and a fourth deposition of I. Willard Fox in July, 1881.

On the 30th of November, 1881, the master filed his report as follows:

[617] "This proceeding is brought for the foreclosure of a mortgage executed by I. Willard Fox upon certain real estate known as the Lake Zurich farm, in the County of Lake and State of Illinois, and lot two (2), in block twenty (20), in Bushnell's Addition to Chicago, which was given for the purpose of securing the payment of sums of moneys therein mentioned, which, it is alleged had become due the firm of Samuel H. Fox & Co. as the result of certain business relations between them extending through a number of years, and which are set forth in detail in the bill.

"The answer of the defendant admits the execution of the mortgage and the agreement supplemental to it, but undertakes to explain the circumstances under which they were made, and denies that at the time of their execution any such sum as is therein claimed was due and owing from him, and that, by reason of what has since occurred, any such indebtedness whatever exists against him, and avers that, upon a proper settlement of account, there will be shown to be a balance in his favor.

"It is for the purpose of examining and stating this account that a reference was made to me by the court.

"It is not necessary for me to review the earlier relations between the parties, culminating in the establishment of the separate business of I. Willard Fox in Chicago, or to examine their accounts prior to their attempted adjustment in February, 1869, showing the sum of nineteen hundred and twenty-three and fifty-three hundredths dollars due upon the individual account of I. Willard Fox, and the sum of sixty-eight thousand two hundred and seventy-seven and fifty-eight hundredths dollars due upon the glass account.

"These debit sums are conceded to be correct, as well as the payment by Fox & Co. to the creditors of I. Willard Fox of the sum of ten thousand nine hundred and seventy-one dollars and thirty cents, making at that date a total sum of eighty-one thousand one hundred and seventy-two and forty-one hundredths dollars ($81,172.41) due from I. Willard Fox to Fox & Co.

"This was the state of the account in February, 1869, when I. Willard Fox became em- [618] barrassed in business. The First National Bank, his largest creditor, having obtained a judgment against him, levied upon his stock of goods and closed his store, an arrangement was made between him and Fox & Co., resulting in the settlement by them of all the claims against him, except their own, at a compromise rate, and the business was resumed, with Ethan Allen Fox, the uncle of the defendant, and I. Willard Fox, in charge. After the settlement made with the creditors of I. Willard Fox, and the restoration of the property from the seizure of the First National Bank, and the resumption of the business, and between March 23 and November 5, 1869, additional shipments of glass were made, amounting in the aggregate to the sum of twelve thousand nine hundred and ninety-nine dollars and sixty-three cents ($12,999.63); and it is insisted that these consignments were also made to I. Willard Fox, and that this amount should be added as a further indebtedness against him.

"Upon the other hand, it is contended that in February, 1869, and before the receipt of these shipments, all the business and property was turned over to Fox & Co., and I. Willard Fox and Ethan Allen Fox placed in its management, under the direction of Fox & Co. and their control. Samuel H. Fox swears that these shipments were made to I. Willard Fox and formed part of his stock, the remnant of which was turned over to him in December following, at which time he insists that the final adjustment was made, while Ethan Allen Fox and I.

Willard Fox, who were in charge and remained there until the stock was all disposed of, swear that the goods received after February were not billed to I. Willard Fox and not purchased by him; and I can find no entries in the books of Fox & Co. showing that they were ever charged to him, but they do show they were consigned to Samuel H. Fox.

"A. St. John Campbell and Robert B. Merritt, book keepers and clerks at and after the change of possession, swear that it occurred in February, Samuel H. Fox assuming general charge and conduct of the business from that time; and there is no testimony contradicting it except that of Samuel H. Fox himself, who swears that the change did not take place until December following.

[619] "The fact that an inventory was made of the stock in January preceding, and that none was made afterwards, seems to me to be a strong circumstance tending to show, in connection with the conduct of the parties and the testimony of Ethan Allen Fox and Merritt, that it was in February and not in December that the property was turned over.

"I can find nothing in the record, outside of the testimony of Samuel H. Fox, to justify any other conclusion; and I therefore disallow that item of complainant's claim leaving due from I. Willard Fox at this date—February 1, 1869—the sum of eighty-one thousand one hundred and seventy-two and forty-one hundredths dollars ($81,172.41), subject to such deductions as shall hereafter appear as proper to be made.

"In this amount is included the sum of seven thousand seven hundred and eighty dollars and eighty cents ($7,780.80) interest, which it is claimed was erroneously charged, and which I deduct from the amount stated, for the reason that the testimony does not, in my estimation, justify its allowance. It does not appear that there was any arrangement by which interest was to be charged; and the four entries of interest which appear upon the books of Fox & Co. are shown to have been made after the accounts were closed, and do not harmonize with the statements of S. H. Fox in respect to this matter.

"This charge seems to me also not to have been in contemplation with the parties, in view of their personal relations and the history and general character of their business, which, although not appearing to me to have been strictly of a commission character, seemed to partake somewhat of that nature,—Fox & Co. all along making use of I. Willard Fox to dispose of the goods sent him, without such regard to the orders sent them as would prevail with persons dealing together under different circumstances and relieved of their peculiar relations.

"Throughout all this time, also, the business of I. Willard Fox seemed to be limited to the supply furnished him from this firm; and I can refer to but one or two instances where he resorted to other sources to enable him to meet the demands of his trade.

"During the entire period of this account I find no evidence of any settlements having [620] been made or anything done between the parties out of which any claim for interest could have arisen; and it does appear to me that, in view of the fact of I. Willard Fox having been limited, in the supply sent him by Fox & Co., to such kind and sizes of glass as they chose from time to time to ship, it could not have been expected of him to pay interest upon the necessary delay and vexation to which he is shown to have been subjected in disposing of goods selected to suit the convenience of Fox & Co., and not necessarily demanded by this trade; and there is no evidence tending to show that this was expected of him.

"In addition to this credit I have allowed one of 10 per cent for breakage of glass, and for stained glass, and cutting down glass into smaller sizes. While the testimony very clearly establishes an allowance in favor of this item, the witnesses are not united upon the amount proper to be deducted under this head. It is, however, clear to me that the consignors having sent glass to the defendant all along without reference to the kind ordered, making it necessary for him to constantly cut down to suit his trade, a credit should be made to this extent in his favor, and this is the smallest amount justified by the evidence. Upon this item of account a credit of seven hundred and fifty-five dollars and eighty-two cents ($755.82) appears upon the books of Fox & Co. to have been made, leaving the sum of eighty-four hundred and forty-three dollars and thirty cents ($8,443.30) to be deducted from the amount already reported.

"In addition to this an allowance should be made for the property turned over to Fox & Co. by I. Willard Fox when the latter is shown to have entered into possession of the store, with Ethan Allen Fox and I. Willard Fox in charge.

"This property consisted of glass, evidences of indebtedness, paints, oils, etc., and fixtures, together with what is known as the Merritt mortgage, amounting to a complete transfer of the entire stock and business of I. W. Fox.

"Samuel H. Fox conducted the negotiations for Fox & Co., and says that it was a 'mutual' arrangement between the parties, and there is no evidence tending to show that it was not [621] one entirely satisfactory. No inventory, however, was then taken of the goods and no appraisement of the bills receivable.

"The fact that none was made inclines me to believe that the one taken in January previous was relied upon as all that was necessary for this purpose, and the testimony of the witnesses in charge of the store at that time, and by whom the only inventory was taken, tends to establish that as the basis upon which the parties must have proceeded. It is hardly possible that I. Willard Fox, having at last been relieved from all the pressing demands upon him aside from the claim of Fox & Co., should have finally surrendered this large amount of goods and securities to be credited in return for whatever it might bring in other hands.

"There is nothing in the testimony of Samuel H. Fox to show the value of this property, and all the information which we have upon this point is the testimony of the defendant himself, supported by the evidence of Ethan Allen Fox, Robert B. Merritt, the book keeper, A. St. John Campbell, and other witnesses having relations to the business, and to a greater or less extent of the same import.

"All of these witnesses concur in fixing the amount of the inventory of goods and accounts at between sixty and seventy thousand dollars, no one of them placing it less than the former sum, and it is shown that the accounts were all collectible.

"The division made by the witnesses, taking the lowest respective amounts, shows the glass to have been worth thirty thousand dollars ($30,000); the paints, oil, etc., fifteen thousand dollars ($15,000); notes collectible, fifteen thousand dollars ($15,000); the fixtures, fifteen hundred dollars ($1,500) (at which they were sold); and the Merritt mortgage, twenty-one hundred and one and sixty-one hundreths dollars ($2,101.61).

"If this testimony is to be relied upon, and assuming that the stock was taken possession of, as all the defendant's witnesses agree in stating, on the first day of February, 1869, then, in the absence of other preponderating evidence, these figures must be adopted in estimating these credits, except in the single item [622] of paints and oils, where I think a reduction from fifteen to twelve thousand dollars should be made.

"It is contended that the books of I. Willard Fox and the inventory made by him would exhibit still larger credits than these even, and their destruction by fire is a misfortune which must always be felt in determining the exact relations between these parties, but it is a fortunate circumstance that the witnesses and parties to these transactions still survive, furnishing, as far as they do, the information upon which this account must be stated.

"On the other hand there is absolutely no testimony whatever offered as to the value of the property when it is claimed to have been turned over. Samuel H. Fox swears that he had no knowledge whatever as to it, and the only information coming from the complainant upon this subject is derived from the account upon the books of Fox & Co., with I. Willard Fox, showing that from the stock, fixtures, and notes and accounts there was realized the gross sum of twenty-seven thousand three hundred and forty-three and no hundredths dollars.

"An examination of this account, however, shows that it is but a partial one, and does not fully account for all that was turned over to Fox & Co., and is essentially wanting in the specific information to which the defendant would be entitled if he was bound by such independent disposition of the property as Fox & Co. chose to make of it.

"It is contended upon the part of the defendant that he is not so bound, and that the complainant must account for all the property he received, at the prices which they were then shown to be worth.

"It seems to me that this is peculiarly a case where that rule should be applied, and the careless and incomplete manner in which the accounts were kept by Fox & Co., after their receipt of the property, renders such application absolutely necessary in stating this account. I can see no other course left to adopt, and have therefore credited the defendant with those five items modified in the way stated, which leaves a balance due the complainant of [623] four thousand three hundred and forty-six and seventy one-hundredths dollars ($4,346.70), ending with December, 1869.

"I append hereto a statement, marked Exhibit 'A.' which shows the account stated:

"Exhibit 'A.'

"I. Willard Fox to Fox and Company.

"Dr.

To due on personal account		$1,923 53
" " " glass account		68,277 58
" paid in settlement with creditors		10,971 30
		$81,172 41

"Cr.

By interest included in glass account improperly	$7,780 80	
Damages from breakage, stained glass, and cutting down (less $755.82, already allowed), and estimated at 10 per cent	8,443 30	
Notes shown to have been collectible	15,000 00	
Paints, oils, etc.	12,000 00	
Fixtures sold	1,500 00	
Merritt mortgage	2,101 61	
Glass returned at date of settlement	30,000 00	
		76,825 71
"Leaving a balance due complainant		$4,346 70

"I further find, from the evidence, that, on the 5th day of November, A. D. 1875, Henry W. Fox, his wife joining, executed a mortgage upon the 532 acres of the land included in the mortgage sought to be foreclosed in this proceeding, and known as the Lake Zurich farm, to secure the payment to one Loring Monroe, of the State of New York, in six years, with interest semi-annually, and at the rate of 7 per cent, and which is a subsisting lien upon said property.

"It is agreed between the counsel that the full amount of said loan is due from Henry W. [624] Fox, with interest from the 5th day of May last, leaving due at this date, as a charge upon said property, the sum of twelve thousand dollars for the principal, and four hundred and sixty-nine dollars for interest thereon, or a total sum of twelve thousand four hundred and sixty-nine dollars ($12,469)."

That report was made in the original suit.

On the 21st of December, 1881, the plaintiff in the original suit filed the following exceptions to the report of the master:

"*First exception.* For that the said master refused to suppress the depositions of the defendants, I. Willard Fox and Eleanor Fox, but, on the contrary, treated their testimony as competent and relied upon it in making his findings in this case.

"*Second exception.* For that the said master refused to allow in favor of complainant, and against I. Willard Fox, the sum of $12,999.63, being the amount of glass shipped by Fox & Co. to I. Willard Fox, and received by him, between March 26 and November 5, 1869.

"*Third exception.* For that the said master improperly disallowed the sum of $7,780.80 in interest which had accrued before February, 1869, and failed to allow to complainant any interest since that time.

"*Fourth exception.* For that the said master disregarded the contemporary documentary writings and agreements made by the parties, and the oral testimony confirmatory thereof, and upon the mere opinions of witnesses im-

properly allowed to defendant, I. Willard Fox, credit for the following amounts, to wit:

"(1.) The sum of $8,448.30, damages from breakage, stained glass, and cutting down, estimated at 10 per centum.

"(2.) The sum of $15,000 for notes shown to have been collectible.

"(3.) The sum of $12,000 for paints, oils, etc., turned over to Fox & Co.

"(4.) The sum of $1,500 for fixtures sold.

"(5.) The sum of $2,101.61 for the Merritt mortgage.

"(6.) For $30,000 for glass returned at the date of settlement.

"*Fifth exception.* For that the said master, [625] while charging the firm of Fox & Co with the whole value of the stock in the store of I. Willard Fox, makes no allowance of any part of the sum of $23,970.99, being the amount of the account of Fox & Co. against I. Willard Fox between February and December, A. D. 1869."

On the third of January, 1884, the cause was heard on such exceptions, and on the pleadings and proofs. Before any decision was made, and on the 9th of June, 1884, the cause was referred to the same master, to take proof and ascertain and report "the present value of the La Salle Street lot," and also to take evidence as to the amount due on the mortgage for $12,000, executed by Henry W. Fox to Loring Monroe.

In June, 1884, the master took testimony as to the matters so referred to him, and on the 11th of July, 1884, he filed his report, finding the then value of the La Salle Street lot to be $250 per front foot, and the value of the entire property, of fifty feet front, to be $12,500. The report says:

"The testimony of the witnesses upon this point varies from $225 to $300 per foot. The average value as established by the defendants' witnesses would be $285 per foot, and the average value as established by all the witnesses would be $230 per foot; but in estimating this value I have taken more into consideration the opinions of witnesses who have shown a larger familiarity with this property and that adjacent to it, and whose dealings in connection with the property have been more extensive and of a more recent date; and as a result of this I have come to the conclusion stated."

The report also found that there was due, June 9, 1884, on the mortgage of May 5, 1881, executed by Henry W. Fox and his wife to Loring Monroe, on the Lake Zurich farm, $15,059, being for principal $12,000, and for interest $3,059.

The plaintiff in the original suit filed exceptions to the last named report, as follows:

"*First exception.* And now comes the said complainant, Kate W. Fox, by Charles H. Wood, her solicitor, and excepts to the finding of the said master that the said La Salle Street lot is of the value of $12,500, and for cause of [626] exception showeth that the said finding is wholly insufficient upon which to found a decree for the reasons:

"(1.) That the agreement between the defendant, I. Willard Fox, and Fox & Co., of February, 1869, and the deed of this lot made by the former in pursuance thereof, were absolute and unconditional, and no right of redemption attached to that property;

"(2.) That I. Willard Fox having conclusively admitted that he owed at the time of said agreement the sum of seventy thousand dollars, as the court has found, the lot was fully paid for at that time, and to charge the complainant with the present value of the lot is to cause her to lose the interest on its value from that time to the present, as well as all taxes that she has paid.

"*Second exception.* For that the master should have found the value of the lot in February, 1869, when the deed to it was made, or at least in February, 1875, when the complainant acquired it, for otherwise, although fully paid for, the complainant would have the burden of carrying the property, while the defendant, I. Willard Fox, would get the whole benefit of it.

"*Third exception.* For that the said master should not have found the present value of the lot without also having found the interest on its value since February, 1869, and the taxes thereon since paid by the complainant, and deducted the same from its present value.

"*Fourth exception.* For that the master erred in finding the amount due upon the Monroe mortgage, because that mortgage cannot in any form be made a basis of any decree under the issues in this case, and because it does not appear who is the owner of said mortgage, nor is the owner a party to this proceeding, and because, if paid by this decree, the court cannot prevent the owner from foreclosing it in any proper form, since he is in no manner bound by this decree."

On the 29th of July, 1884, a decree was made, entitled in the original and cross suits, and which found as follows: (1) That I. Willard Fox is indebted to Kate W. Goodwin, as the legatee and devisee of Henry W. Fox, deceased, in the sum of $15,971.30; (2) that, on [627] the 20th of February, 1869, I. Willard Fox and his wife conveyed to Samuel H. Fox, by deed, the Lake Zurich farm and the La Salle Street lot; (3) that both of said deeds were made to secure said indebtedness, and are in the nature of a mortgage; (4) that on the 25th of September, 1875, Samuel H. Fox conveyed the farm and the lot to Henry W. Fox, who took the same with full knowledge of all the rights and equities of I. Willard Fox in the premises, and to whom the debt was at the same time transferred; (5) that, on the 5th of November, 1875, Henry W. Fox executed a deed of trust or mortgage on the Lake Zurich farm, to secure the payment of $12,000 which had been borrowed by him from Loring Monroe; (6) that there is now due on that loan $15,059; (7) that on the first of June, 1876, Henry W. Fox died testate, and by his will bequeathed and devised the indebtedness and the farm and the lot to his wife, Kate W., who, since the commencement of the suit, has married Charles S. Goodwin; (8) that on the 7th of April, 1881 [1880], Kate W. Goodwin and her husband conveyed the La Salle Street lot to Sarah E. R. Smith, wife of Charles W. Smith, who acquired no better title or right, as against I. Willard Fox, than Kate W. Goodwin had; and (9) that there had been paid on the La Salle Street lot, for

taxes, $565.33, which is chargeable to I. Willard Fox.

The decree then provided as follows: (1) That I. Willard Fox should pay into the registry of the court, for Kate W. Goodwin, by the first of September, 1884, $16,536.63, with interest thereon at the rate of 6 per cent per annum, provided Kate W. Goodwin, or some one for her, should procure the release of the premises described in the deed of trust or mortgage to secure the debt of Loring Monroe, from all incumbrance created thereby; (2) that, in default of such payment, I. Willard Fox and his wife should be barred and foreclosed of all right and equity of redemption "in said premises," and the master should sell the same; that, in case a release of the lands described in the trust deed or mortgage should not be procured by the first of September, 1884, then I. Willard Fox should pay into the registry of the court, for Kate W. Goodwin, $1,477.63, by the first [628] of November, 1884, with interest thereon at the rate of 6 per cent per annum, and in default of such payment, the master should sell "the said lands," and I. Willard Fox and his wife should be barred and foreclosed of all equity of redemption "in said lands and lot;" and, in case I. Willard Fox should pay the $1,477.63, he should also save and keep harmless the estate of Henry W. Fox from all liability on the debt to Loring Monroe, and should assume the payment of the indebtedness secured by the Monroe mortgage; (3) that in case either the $16,536.63 or the $1,477.63 should be paid, Kate W. Goodwin and her husband should convey, on or before November 1, 1884, to I. Willard Fox "the lands first hereinbefore described," subject to the Loring [Monroe] incumbrance, and Sarah E. R. Smith and her husband should convey to I. Willard Fox the La Salle Street lot; (4) that, in case of a failure to make such conveyances or either of them, the master should make them on behalf of Kate W. Goodwin and her husband, and of Sarah E. R. Smith and her husband respectively; (5) that Sarah E. R. Smith might, if she elected, pay into court or to I. Willard Fox, $11,500 with interest at the rate of 6 per cent from July 29, 1884, by or before October 15, 1884, the sum of $11,500 being found by the court "to be the present cash value" of the La Salle Street lot; and that, in case of such payment, Sarah E. R. Smith should be decreed to hold the lot thenceforward discharged from all equity of redemption of I. Willard Fox and all persons claiming under him. The decree charged I. Willard Fox with the costs of the cause.

On the 29th of September, 1884, an order was entered amending the decree by inserting provisions (1) that the first exception to the master's report be sustained, so far as it relates to the testimony of Eleanor Fox, and be overruled so far as it relates to the testimony of I. Willard Fox; (2) that the second exception be overruled; (3) that the third exception be sustained; (4) that the fourth exception be sustained so far as it relates to the item of $8,443.30, damages for breakage of glass; (5) that the finding of the master as to the value of the glass, paints, oils, store, fixtures, and notes and accounts, turned over to Fox & Co. by I. Willard [629] Fox, be modified and changed, so that the value of the same be fixed at the sum of $65,000, instead of $60,601.60, as found by the master; (6) that the fifth exception be overruled; and (7) that the reports and findings of the master, except as so overruled or modified, be confirmed.

It appears by the record that I. Willard Fox died on the 29th of August, 1884, leaving a widow and six children as his heirs at law, and a will by which he devised all his real estate to his widow for life, with remainder to his children; that, on February 26, 1883, he and his wife conveyed to William C. Goudy and Louie P. McDaid the La Salle Street lot; that no release was procured by Kate W. Goodwin, or anyone for her, of the Lake Zurich farm from the mortgage to Loring Monroe; that Sarah E. R. Smith had not paid the $11,500 with interest; that there had been paid into court, by and before November 1, 1884, the $1,477.63, for Kate W. Goodwin; that all the costs of the suit had been paid on behalf of the estate of I. Willard Fox; and that deeds had not been made by Kate W. Goodwin and her husband, and by Sarah E. R. Smith and her husband, as required by this decree.

On these facts, the court, by an order made January 13, 1885, substituted the widow and children of I. Willard Fox as parties in his place, and ordered that the master execute a deed, on behalf of Kate W. Goodwin and her husband, of the Lake Zurich farm, and also a deed to Goudy and McDaid of the La Salle Street lot. The master, on the 26th of January, 1885, reported that he had executed those deeds, the deed of the Lake Zurich farm being a deed to the widow of I. Willard Fox for her life, and a deed to his children in remainder; and the court, by orders made the same day, approved and confirmed those deeds. It also appears that, on the 4th of March, 1885, the court made an order granting a writ of assistance to put Goudy and McDaid in possession of the La Salle Street lot.

On the 20th of June, 1885, Kate W. Goodwin and her husband, and Sarah E. R. Smith and her husband, perfected an appeal to this court from the decree in the original suit and the cross suit.

It is assigned here, by the appellants, for [630] error, that the circuit court erred in overruling the first exception to the report of the master, of November 26, 1881, in so far as it relates to the competency of I. Willard Fox as a witness; in overruling the second exception to that report; in refusing to sustain the fourth exception to that report, as to the amount of assets of I. Willard Fox properly chargeable to Fox & Co., and in increasing the amount of the same as found by the master; in failing and neglecting to allow interest upon the sum due to the plaintiff in the original bill, subsequently to February 20, 1869; in overruling the first, second and third exceptions to the master's report of July 11, 1884, and in confirming that report; in overruling the fourth exception to that report; and in deducting by its decree the amount of the Monroe mortgage from the amount due to the plaintiff in the original bill.

As to the exception that the master refused to suppress the depositions of I. Willard Fox and treated his testimony as competent, and relied upon it in making his findings, it

nowhere appears by the record that any objection was made before the master to that testimony, or that any motion was made before him to suppress such depositions, or that any motion was made before the court to suppress them; and, as the only ruling of the court in regard to them was that the first exception should be overruled, so far as it related to the testimony of I. Willard Fox, it may very well be that the court overruled such exception because, it being an exception that the master refused to suppress the depositions, the court could not find as a fact that the master had refused to suppress them.

Irrespective of this, section 858 of the Revised Statutes of the United States does not apply to the present case. It reads as follows: "In the Courts of the United States, no witness shall be excluded in any action on account of color, or in any civil action because he is a party to or interested in the issue tried: *Provided*, That in actions by or against executors, administrators, or guardians, in which judgment may be rendered for or against them, neither party shall be allowed to testify against the other, as to any [631] transaction with, or statement by, the testator, intestate, or ward, unless called to testify thereto by the opposite party, or required to testify thereto by the court. In all other respects, the laws of the State in which the court is held shall be the rules of decision as to the competency of witnesses in the Courts of the United States in trials at common law, and in equity and admiralty." This section only provides that in actions by or against executors, in which judgment may be rendered for or against them, neither party shall be allowed to testify against the other as to any transaction with, or statement by, the testator, unless called to testify thereto by the opposite party, or required to testify thereto by the court. Subject to this restriction, the section provides that, in the Courts of the United States, no witness shall be excluded, in any civil action, because he is a party to, or interested in, the issue tried. I. Willard Fox, although a party to, and interested in, the issues tried in these suits, cannot be excluded as a witness on that account, unless the case is covered by the proviso. The last clause of the section, which makes the laws of the State the rules of decision as to the competency of witnesses in the Courts of the United States, in trials in equity, "in all other respects" means "in all other respects" than those provided for in so much of the section as precedes the word "*Provided*," and does not qualify the clause which forms the proviso. *Potter* v. *Third Nat. Bank*, 102 U. S. 163 [26:111].

In the present case, although Kate W. Goodwin was executrix of the will of her deceased husband, Henry W. Fox, she did not ask for a decree in her favor as executrix, but she claimed an interest in the Lake Zurich farm and in the La Salle Street lot only as devisee of that real estate under her husband's will; and the final decree finds that I. Willard Fox is indebted to her, "as the legatee and devisee" of her husband, in the sum of $15,971.30. Moreover, the material transactions about which I. Willard Fox testified, namely, those relating to the instrument of February 20, 1869, and what took place after that date, were transactions between himself and Samuel H. Fox, and not between himself and Henry W. Fox.

Before considering any of the other questions [632] raised in the case, it is proper to determine whether either party can go behind the statement of existing indebtedness set forth in the agreement of February 20, 1869. That agreement was made between I. Willard Fox and Fox & Co., and is signed by Samuel H. Fox in behalf of Fox & Co. In it both parties state that I. Willard Fox is indebted to Fox & Co. in the sum of $70,000, "over and above all discounts and set-offs of every name and nature." It leaves uncertain the amounts paid or to be paid by Fox & Co., to cancel the other debts of I. Willard Fox, but it agrees upon the sum of $70,000 as the then existing indebtedness of I. Willard Fox to Fox & Co. It goes on to speak of that indebtedness as "said original indebtedness," and the supplemental paper signed by Samel H. Fox speaks of "said debt of seventy thousand dollars." It must be held that the parties to the agreement deliberately fixed upon that sum of $70,000, because the agreement states that, in making it up, the parties took into consideration "all discounts and set-offs of every name and nature." There is no sufficient or satisfactory evidence to impeach the agreement, as respects I. Willard Fox, on the ground that his signature to it was obtained by fraud or duress or without his full knowledge of its provisions and consent to its terms.

There is a great deal of testimony in the record bearing upon the question of the damages claimed by I. Willard Fox for the breakage of glass, and for "stained" glass, and for cutting down glass into smaller sizes, prior to February 20, 1869. The master allowed against Kate W. Goodwin the sum of $8,443.30 for such damages, and also added to the credit side of the account of I. Willard Fox $7,780.80, for interest which he found had been improperly included in the glass account, as a charge for interest accruing against I. Willard Fox prior to February 20, 1869. Kate W. Goodwin excepted to the allowance to I. Willard Fox of the $8,443.30, and the court sustained the exception and excluded that item. She also excepted to the disallowance to herself of the $7,780.80, and the court sustained that exception also. This was, in effect, a ruling by the court that the parties could not go behind the settlement of February 20, 1869, as to the [633] $70,000. As the heirs and representatives of I. Willard Fox have not appealed from the decree, the action of the court in sustaining the exceptions as to those two items must, of course, stand. But it is rendered immaterial by the general view we take of the case.

It is contended by the appellants that the circuit court erred in overruling the second exception to the master's report, which was, that the master refused to allow, in favor of Kate W. Goodwin and against I. Willard Fox, the sum of $12,999.68 [$12,999.69], the same being for the amount of glass shipped to I. Willard Fox by Fox & Co. and received by him, between March 26, 1869, and November 5, 1869. The date of March 26, 1869, is stated by the master in his report to be March 23, 1869. The master disallowed that claim of Kate W. Goodwin, on the view that, in February, 1869,

and before any of such glass was shipped, all the business and property were turned over to Fox & Co., and they afterwards managed and controlled it; that the glass was not charged by Fox & Co. to I. Willard Fox as sold to him; but that the books of Fox & Co. show that it was consigned to Samuel H. Fox.

There is nothing inconsistent with the agreement of February 20, 1869, in the fact that the stock of goods in Chicago was turned over by I. Willard Fox to Samuel H. Fox, representing Fox & Co., in February, 1869, and that Fox & Co., from that time until December, 1869, carried on the business of the store at Chicago, I. Willard Fox representing them in the business as their agent. The agreement of February, 1869, states that I. Willard Fox "has sold and conveyed" to Samuel H. Fox the stock of goods and the store fixtures, notes, books, and accounts, "with power forthwith, at such times and in such manner" as Samuel H. Fox should deem best, to sell and collect and convert into money, the goods, fixtures, notes, and accounts, and apply the proceeds to the payment of the indebtedness to Fox & Co. This transfer being then made, and the business being afterwards carried on by Fox & Co. for themselves until December, 1869, it would have been entirely inconsistent with this arrangement that Fox & Co. should sell to I. Willard Fox the glass they sent him after- [634] wards, prior to the final discontinuance of the business in December, 1869. The weight of the evidence is also to the same effect. The master, therefore, on his view of the case, properly refused to allow in favor of Kate W. Goodwin the $12,999.69; and the exception to such disallowance, being the second exception to the master's report, was properly overruled by the court. But as this $12,999.69 of glass was represented by notes and accounts finally turned over by I. Willard Fox to Fox & Co., and the proceeds of which form part of the $27,343.07 credited to I. Willard Fox in the account hereinafter contained, it is proper to put the $12,999.69 on the debit side of that account.

The master disallowed the $7,780.80 of interest which accrued before February, 1869, as having been improperly included in the glass account for the reason that, in his judgment, the testimony did not justify its allowance, it not appearing that there was any arrangement by which interest was to be charged, and the four entries of interest which appeared upon the books of Fox & Co. being shown to have been made after the accounts were closed, and not harmonizing with the statements of Samuel H. Fox in respect to the matter; that the business between I. Willard Fox and Fox & Co., prior to February 20, 1869, partook somewhat of a commission character; that such business was mainly and substantially limited to the supply of glass furnished to I. Willard Fox by Fox & Co.; that during that time no settlements were made, nor was anything done, between the parties, out of which a claim for interest could have arisen; that the glass sent to I. Willard Fox by Fox & Co. was limited, as to kinds and sizes, to such as Fox & Co. chose from time to time to send; that, under such circumstances, it could not have been expected that he would pay interest for the time occupied in disposing of the glass; and that there was no evidence tending to show that Fox & Co. expected he would pay interest. As Kate W. Goodwin, by her third exception to the master's report, objected to his disallowance of the $7,780.80 of interest, and the court sustained that exception and allowed that item of interest to her, and the heirs and representatives of I. Willard Fox have not appealed from the decree, the sustaining of that exception must [635] stand; but it is made of no importance by the disposition we make generally of the case. If interest were properly chargeable against I. Willard Fox on the items of his account prior to February 20, 1869, it must be regarded as having been included in the $70,000.

The third exception also objects that the master failed to allow to Kate W. Goodwin any interest since February, 1869. The court sustained the third exception as to that branch of it also; and it is assigned here by Kate W. Goodwin for error, that the circuit court erred in failing to allow such interest. The effect of the ruling of the court, in sustaining the third exception, was to hold that the master improperly failed to allow to Kate W. Goodwin any interest after February, 1869. The court, however, in its decree allowed nothing to her as interest for the time after February, 1869, or on any amount, or for any time. The master says nothing in his report about the question of interest afterFebruary, 1869. It is now contended, on the part of Kate W. Goodwin, that, as the agreement of February 20, 1869, admitted the sum of $70,000 to be due, and it was a liquidated demand at that time, it should draw interest either from that time or from the 20th of August, 1869, the expiration of the six months named in that agreement.

The Statute of Illinois (§ 2, chap. 74, Revised Statutes of Illinois of 1874), which has been the Law of Illinois since 1845, provides as follows: "Creditors shall be allowed to receive at the rate of 6 per centum per annum, for all moneys after they become due on any bond, bill, promissory note, or other instrument of writing; on money lent or advanced for the use of another; on money due on the settlement of account from the day of liquidating accounts between the parties and ascertaining the balance; on money received to the use of another, and retained without the owner's knowledge; and on money withheld by an unreasonable and vexatious delay of payment."

We think that, under this statute, Kate W. Goodwin is entitled to be allowed the legal Illinois rate of interest from August 20, 1869, on the $70,000 named in the agreement of that date, and like interest, from the proper dates, on the amounts paid by Fox & Co. to take up [636] and satisfy the other indebtedness of I. Willard Fox, from the time they paid such several amounts, and on the other debit items in the skeleton account hereinafter set forth; and that I. Willard Fox is entitled to be allowed like interest from the proper dates on the credit items in that account.

It is also assigned by Kate W. Goodwin for error, that the circuit court erred in refusing to sustain her fourth exception to the master's report as to the amount of assets of I. Willard Fox, properly chargeable to Fox & Co., and in increasing the amount of the same as found

by the master. The master found such amount to be $60,601.61, consisting of the items of $15,000 for notes shown to have been collectible, $12,000 for paints, oils, etc., turned over to Fox & Co., $1,500 for fixtures sold, $2,101.61 for the Merritt mortgage, and $30,000 for glass returned at the date of settlement. The court, in disposing of the fourth exception, modified the finding of the master, and fixed the value of the above named five items, amounting to $60,601.61, at the gross sum of $65,000. It arrived at the amount of $15,971.30, stated in its decree as the indebtedness of I. Willard Fox to Kate W. Goodwin, by the following calculation:

Indebtedness fixed by the agreement of February 20, 1869	$70,000 00
Add the amount found by the master as paid by Fox & Co. to the creditors of I. Willard Fox	10,971 30
	$80,971 30
Deduct the value of the assets of I. Willard Fox	65,000 00
Balance	$15,971 30

To this sum of $15,971.30 the court added the $565.33 found by the master as having been paid by Kate W. Goodwin for taxes on the La Salle Street lot, making a total of $16,536.63, with which sum, and interest thereon at the rate of 6 per cent per annum from the date of the decree, July 29, 1884, it charged I. Willard Fox. The court did not charge to I. [637] Willard Fox the $1,923.53 found by the master to have been due on his individual and personal account; nor did it credit him with the $7,780.80 item of interest, or the $8,443.30 for damages for breakage of glass, and for "stained" glass, and cutting down glass into smaller sizes. The debit items against I. Willard Fox, which the court put at $80,971.30, the master had put at $81,172.41.

We think it clear that the circuit court erred in giving credit to I. Willard Fox for the value of his assets as having been turned over to Fox & Co. in February, 1869, at the gross sum of $65,000. The terms of the agreement of February 20, 1869, were only that the goods, wares, merchandise, fixtures, notes, accounts, and La Salle Street lot should be sold, collected, and converted into money, and the proceeds be applied to the payment of the $70,000 and of the amount which Fox & Co. had paid or should pay to the creditors of I. Willard Fox. Therefore, I. Willard Fox is entitled to be credited only with the proceeds of the property mentioned in the agreement as having been sold and conveyed to Samuel H. Fox. The business of the store in Chicago, after February 20, 1869, must be considered as having been carried on by, and on behalf of, and for the benefit of, Fox & Co., through I. Willard Fox as their agent, with the stock of goods turned over to Fox & Co. at that date, and the goods which thereafter, and prior to December, 1869, they sent to I. Willard Fox for sale on their behalf. The credit by the master to I. Willard Fox of the $60,601.61, and the credit by the court to him of the $65,000, both of them proceed upon the erroneous view, that the value of the collectible notes, paints, oils, etc., fixtures, Merritt mortgage, and glass were to be deducted as of the date of February 20, 1869, the date of the settlement, without regard to the sale or collection of them, or their conversion into money, or their proceeds. Fox & Co. were not chargeable with the value of the property turned over in February, 1869, but its proceeds were to be credited by Fox & Co. when they should be realized, the property to be disposed of at such times and in such manner as Samuel H. Fox should deem best. They did not agree to take the property at a fixed price, in February, 1869, or at any other [638] time, aside from its proceeds. Therefore, all the testimony as to the value of the property in February, 1869, must be rejected. There is no evidence to show that Fox & Co. received any proceeds which they did not credit.

No specific error is assigned in regard to the overruling of the fifth exception to the report.

It is also assigned for error, that the circuit court erred in overruling the fourth exception to the report of July 11, 1884, and in confirming that report. The master, in his report of July 11, 1884, found that there was due, on the 9th of June, 1884, upon the mortgage made by Henry W. Fox and his wife to Loring Monroe, covering the Lake Zurich farm, for principal and interest, $15,059. The decree of the court was that the $16,536.63 should be paid by I. Willard Fox, provided Kate W. Goodwin should procure a release of such mortgage; but in case the release should not be obtained, then I. Willard Fox might pay into court, for Kate W. Goodwin, $1,477.63, being the difference between $15,059 and $16,536.63. Kate W. Goodwin excepted to such report, as to the finding of the amount due upon the Monroe mortgage, because that mortgage could not, in any form, be made the basis of any decree under the issues in the case; and because it did not appear who owned the mortgage, nor was its owner a party to the suit; and because, if it were paid under the decree, the court could not prevent its owner from foreclosing it. It is assigned by Kate W. Goodwin for error that the circuit court erred in overruling such exception, and in deducting, by its decree, the amount of the Monroe mortgage from the amount due to Kate W. Goodwin. We think this assignment of error is not well taken, and that the exception to the report in that particular was properly overruled.

It is further assigned for error, that the circuit court erred in overruling the first, second, and third exceptions to the master's report filed July 11, 1884, and in confirming that report. Those exceptions relate to the La Salle Street lot, and to the fixing of its value at $12,500, as of the 9th of June, 1884.

We think that the circuit court, in charging Kate W. Goodwin and Sarah E. R. Smith, [639] with $11,500, as "the present cash value" of the La Salle Street lot, committed an error. By the agreement of February 20, 1869, the conveyance of the lot to Samuel H. Fox, for Fox & Co., was absolute and unconditional, with no right of redemption attached to it, and it was in the same category with the personal property, and not merely subject to a lien, as was the Lake Zurich farm. It was conveyed to Samuel H. Fox, in February, 1869, by an absolute deed, and he and his wife conveyed it to Henry W. Fox on the 25th of September, 1875, for $8,000. Under the agreement, Fox & Co. were not bound to apply the value of

the lot, or its proceeds, until it was sold. By the amendment made to the bill November 13, 1880, Kate W. Goodwin offered to credit to I. Willard Fox the amount for which she had sold the lot. She had sold it on the 27th of April, 1880, to Sarah E. R. Smith, for $6,625. But I. Willard Fox was entitled to a credit, as of the 25th of September, 1875, of the $8,000 for which it was then sold to Henry W. Fox, and which the evidence shows was the full value of the lot at that time; and that credit must be allowed. That being done, of course Sarah E. R. Smith will retain the lot; and thus the appeal of herself and her husband in this case is disposed of. The decree provided that she might pay into the court $11,500, with interest, as "the present cash value" of the lot, and that, in case she should do so, she should hold the lot free from all equity of redemption by I. Willard Fox and all persons claiming under him; but that, otherwise, she and her husband should convey the lot to I. Willard Fox, or, on their failure to do so, the master should execute the conveyance instead. All the provisions of the decree in regard to Sarah E. R. Smith and her husband were erroneous, and her title to the La Salle Street lot must be confirmed.

On the foregoing views, we are of opinion that the proper mode of stating the account between the parties is as follows:

[640] I. WILLARD FOX in account with FOX & CO.

Dr.

Amount found due by the agreement of February 20, 1869		$70,000 00
Glass furnished by Fox & Co. to I. Willard Fox, between March 23, 1869, and November 5, 1869, and represented by notes and accounts turned over to Fox & Co.		12,999 69
Amount paid the First National Bank of Chicago, out of the proceeds of the property turned over to Fox & Co.		10,000 00
Amount paid the same bank, raised by a mortgage given on the La Salle Street lot		6,000 00
Amount paid by Fox & Co. in settlement of other debts of I. Willard Fox		10,971 30
		$109,970 99

Cr.

Amount of proceeds received, and debited above as paid to First National Bank of Chicago	$10,000 00	
Amount received as insurance money on the building on the La Salle Street lot, which amount was applied to pay off the mortgage, above mentioned, on the lot	6,000 00	
Proceeds of the sale of the La Salle Street lot, to Henry W. Fox	8,000 00	
Proceeds of sales of goods and other property by Fox & Co., and collection of notes and accounts turned over to Fox & Co.	27,343 07	
		51,343 07
Balance due by I. Willard Fox to Fox & Co.		$58,627 92

Proper provision must be made to carry out our decision that the fourth exception to the [641] report of July 11, 1884, was properly overruled. To this end the amount of $12,000, as the principal of the mortgage to Monroe on the Lake Zurich farm, with the interest due upon it, must be deducted from the balance found due to Fox & Co., on the principle of the above account. In that event the Lake Zurich farm will be charged with, and will pay, the amount due on such mortgage.

The above items of debit and credit are principal sums, and interest must be calculated and added, at the proper rate, from the proper dates, as before stated. It may be, also, that there will be some items of taxes paid, to be adjusted.

It is manifest that the circuit court credited I. Willard Fox with the gross sum of $65,000, as representing the collectible notes, the paints, oils, etc., the fixtures, the Merritt mortgage, and the glass in the store, February 20, 1869, instead of crediting him merely with the proceeds of those assets, when realized. The $10,000 paid to the First National Bank by Fox & Co. was paid out of such proceeds. The $12,999.69 of glass furnished by Fox & Co., after February 20, 1869, was represented by some of the $15,000 of collectible notes credited to I. Willard Fox by the master, and forming part of the $65,000 credited to him by the court; and yet no allowance was made to Fox & Co. for the $12,999.69 of glass so furnished.

It was proper that I. Willard Fox should pay the costs of the circuit court.

The decree of the Circuit Court is reversed, and the case is remanded to that Court, with a direction to take such further proceedings as may be in accordance with law, and not inconsistent with this opinion.

THE WOODSTOCK IRON COMPANY, [643]
Plff. in Errr.,

v.

THE RICHMOND AND DANVILLE EXTENSION COMPANY.

(See S. C. Reporter's ed. 643-663.)

Contract to construct route of railroad, when void—threats—corporations disregarding public duty—contract by director.

1. A contract by an extension company, an employé of a railroad company, with a third party, for a consideration to be received from that third party, to violate its engagement with its employer in locating and constructing a railroad and, instead of selecting the shortest, cheapest and most suitable route, to locate the road by a longer route, and thus impose an unnecessary and heavy burden upon its employer, is a void contract, immoral in its conception and corrupting in its tendency.

2. The transaction on the part of such third party was none the less offensive, because of the threats of the extension company, that if the consideration was not received by such company, it would cause the road to be located on a different route.

3. All arrangements by which directors or stockholders or other persons may acquire gain by inducing corporations to disregard their duties to the public, are illegal and lead to unfair dealing; and, being against public policy, will not be enforced by the court.

4. Where the contract was with an employé of the railroad company to induce such employé to disregard its obligations, and the principal person making that contract on the part of the employé was a director and stockholder of the railroad company to be affected thereby, the contract is void.

[No. 180.]

Argued Feb. 1, 1889. Decided March 5, 1889.

IN ERROR to the Circuit Court of the United States for the Northern District of Alabama, to review a judgment in favor of plaintiff in an action to recover for the breach of an agreement to pay the plaintiff moneys for constructing a railway on a certain route. *Reversed.*

[644] Statement by *Mr. Justice* **Field:**

This case comes from the Circuit Court of the United States for the Northern District of Alabama. The complaint, which was filed in June, 1884, is as follows:

"The plaintiff, which is a corporation created by and under the Laws of the State of New Jersey, claims of the defendant, a corporation created by and under the Laws of the State of Alabama, and located and having its principal place of business in the County of Calhoun, in the State of Alabama, thirty thousand dollars [645] for the breach of an agreement entered into by it on, to wit, the 18th day of November, 1881, whereby and wherein said defendant agreed and promised that if said plaintiff would locate and construct, or cause to be located and constructed, the railroad of the Georgia Pacific Railroad Company (or of the new consolidated company then being formed and to be known as the Georgia Pacific Railroad Company) by way of the Town of Anniston, it, the said defendant, would donate and pay to the said plaintiff, or as it might direct, the cash sum of thirty thousand dollars, to be paid in money as to one half—that is, fifteen thousand dollars—when the said Georgia Pacific Railroad Company connected its line with the line of the Alabama Great Southern Railroad Company at or above Birmingham, Alabama, and the other half—that is, fifteen thousand dollars—when said line was connected with the line of the Louisville and Nashville Railroad Company (the North and South Alabama Railroad Company) at or above said City of Birmingham, provided said connections be made within three years from date of said contract. And plaintiff avers that it did cause to be located and constructed the railroad of the said Georgia Pacific Railway Company by way of the Town of Anniston; that the said Georgia Pacific Railroad Company connected its line with the line of the Alabama Great Southern Railroad Company at or above said Birmingham on, to wit, the 1st day of June, 1883, and with the line of the Louisville and Nashville Railroad Company at or above said city on, to wit, the 1st day of July, 1883; yet, although the said plaintiff has complied with all the provisions of said contract on its part, the said defendant has failed to comply with the following provisions thereof, viz.: It has failed and refused and still fails and refuses to pay, though often requested so to do, any part of said sum of thirty thousand dollars, except the sum of six thousand three hundred and twenty-five dollars, whereby it has become and is indebted to said plaintiff as aforesaid; wherefore this suit.

"The said plaintiff claims of the said defendant the further sum of thirty thousand dollars for the breach of an agreement entered into by him on, to wit, the 18th day of November, 1881, in words and figures in substance as follows:

"ANNISTON, CALHOUN CO., ALABAMA, [646]
"*November*, 18*th*, 1881.

"The Woodstock Iron Company makes to the Richmond and Danville Extension Company the proposition following—that is to say:

"*First.* If the Richmond and Danville Extension Company will locate and construct, or cause to be located and constructed, the railroad of the Georgia Pacific Railroad Company (or of the new consolidated company now being formed, to be known as the Georgia Pacific Railway Company) by way of the Town of Anniston, the Woodstock Iron Company will donate and convey, or cause to be donated and conveyed, by good and sufficient deeds, to the Richmond and Danville Extension Company, or as it may direct: 1. Strips or parcels of land each one hundred feet wide—that is to say, fifty feet on each side of the center line of the location to be fixed for said railroad in, over, and through all and sundry the tracts and lots of lands now owned and to be owned by the Woodstock Iron Company, wheresoever situated, on and along the line of said location outside of the corporate limits of the Town of Anniston, and the Woodstock Iron Company will, upon request of said Extension Company, at any time, proceed to clear the said strips or parcels of land from timber thereon, allowing, however, the said Extension Company to have and take therefrom all that part of timber useful to it for the purpose of construction and for cross ties.

"2. A strip or parcel of land in, over and through the entire corporate limits of the Town of Anniston, so far as owned by the Woodstock Iron Company, as follows—that is to say, on the left or west side of the center line of the location to be fixed for said railroad, from the point of entering to the point of leaving said corporate limits, a width of fifty feet, measuring from said center line, and on the right or east side of the center line of the location to be fixed for said railroad a width of fifty feet, measuring from said center line from the point of entering said corporate limits to a point nineteen hundred and six and eight tenths feet short of a point agreed, at or about the near foot of a hillock situated in a field in a westerly direction from the depot of the Selma, Rome [647] and Dalton Road; thence for a length of thirteen hundred six and eight tenths feet to said point agreed a width of one hundred and fifty feet measuring from said center line, and thence to a point of leaving said corporate limits a width of fifty feet, measuring from said center line. Appended hereto is a tracing showing said strip or parcel of land.

"3. All such additional strips or parcels of land within and adjoining the Town of Anniston as the experimental location about to be made may show to be reasonably necessary for sidings and other tracks for the advantageous and convenient transaction of the business of the Georgia Pacific Railroad or Railway Company, and especially for siding or spare track along and to the right or east of the Selma, Rome and Dalton line, for convenient approach to the furnaces and for sidings or spare tracks from the main line, at or above the place of greatest width, for convenient approach to the cotton factory and to the presently-to-be-established car-wheel and car works.

"The Woodstock Iron Company will aid the work of construction, and especially so of the sidings or spare tracks for the furnace, by the judicious wasting of the furnace cinder and other material; and the said company will in a general way do all it can to facilitate the work and advance the business of the railroad company whose location it invites; and the Woodstock Iron Company will donate and pay to the Richmond and Danville Extension Company, or as it may direct, the cash sum of thirty thousand dollars, paying the same in money as to one half—that is, fifteen thousand dollars—when the Georgia Pacific Railroad or Railway Company connects its line with the line of the Alabama Great Southern Railroad Company at or above Birmingham, Alabama; and as to the other half—that is to say, fifteen thousand dollars—when the Georgia Pacific Railroad or Railway Company connects its line with the line of [the] Louisville and Nashville Railroad Company (the North and South Alabama Railroad Company) at or above Birmingham, Alabama, the above to be paid only provided the Georgia Pacific Railroad or Railway Company is so far completed as to make the connections above within three years from this date.

[648] "In case the Richmond and Danville Extension Company accepts the terms proposed above, this instrument shall have the effect of a binding contract upon the Woodstock Iron Company; but such acceptance must be in writing and addressed to the president and secretary and treasurer of the Woodstock Iron Company in Anniston, Alabama, within four months from the date thereof; and, if the Richmond and Danville Extension Company shall desire hereafter to build machine shops for the Georgia Pacific Railroad or Railway Company at the Town of Anniston, will donate and convey to said Extension Company, or as it may direct, by good and sufficient deeds for that purpose, at least five acres of land at a convenient distance from the crossing of the Selma, Rome and Dalton Road. If, however, this land is accepted for shops, the land shall be appropriated and the shops built within four years from this date.

"In testimony whereof witness the signature of the president and secretary and treasurer and the corporate seal of the Woodstock Iron Company, this 18th day of November, 1881.

"[SEAL.] "ALFRED L. TYLER, *President.*
"SAMUEL NOBLE, *Sec'y and Treas.*

"And the plaintiff avers that it did accept the terms proposed by said instrument above set out, in a writing, addressed to the president and secretary and treasurer of said Woodstock Iron Company, at Anniston, within four months from the date of said agreement and instrument, which said writing was delivered to said president and secretary and treasurer on, to wit, the 18th day of January, 1882, and is in words and figures in substance as follows:

"ATLANTA, GA., *Jan'y 17th*, 1882.

"Messrs. Alfred L. Tyler, President, and Samuel Noble, Secretary and Treasurer of Woodstock Iron Company, Anniston, Ala.

"GENTLEMEN: The Richmond and Danville Extension Company hereby notifies you that it accepts the proposition in writing made by you on behalf of the Woodstock Iron Company to said Extension Company regarding the location and construction of the Georgia Pacific Railway by the Town of Anniston, the date whereof is Anniston, Calhoun County, Alabama, November 18th, 1881, and a copy of which is hereto appended, Respectfully, [649]

"JOHN W. JOHNSTON,
"*Vice-President Richmond and Danville Extension Company.*

"And plaintiff avers that said defendant was at that time engaged, among other things, in the business of making pig-metal and other products from iron ores, and making sales of the same; that its works were located in said Town of Anniston, and that it owned large quantities of valuable property therein, and that the said railroad referred to in said contract was a road then in the process of construction, to be run from Atlanta, Georgia, through the State of Alabama to Columbus, in the State of Mississippi; and plaintiff avers that it did locate and construct the railroad of the said Georgia Pacific Railway Company by way of the Town of Anniston, by, to wit, the 1st day of January, 1883; that it did connect the line of said railway company with the line of the Alabama Great Southern Railroad Company, at or above said City of Birmingham, by, to wit, the 1st day of June, 1883; and that it did connect the line of said railway company with the line of the Louisville and Nashville Railroad Company, at or above the said City of Birmingham, by, to wit, the 1st day of July, 1883; and has in all things fully complied with all the terms and stipulations of said agreement undertaken upon its part. Plaintiff further avers that said defendant has complied with the terms and stipulations of said agreement to this extent, and no further. It has donated and conveyed by good and sufficient deeds to the Georgia Pacific Railway Company, as directed and requested by the plaintiff, the several strips and parcels of land for right of way and sidings of the railroad of said company, as stipulated and agreed in said agreement, and has paid to the said plaintiff on account of said cash payment of thirty thousand dollars agreed and undertaken to be made by said agreement the sum [650] of six thousand three hundred and twenty-five dollars, paid in cars furnished and advanced by defendant to the Georgia Pacific Railroad Company, on account of said cash payment, at the request of plaintiff. But plaintiff further avers that although it has fully complied with all the terms and stipulations of said agreement to be done and performed on its part, that although it located and constructed said railroad of the Georgia Pacific Railway Company by the way of the Town of Anniston and connected the line of said railroad with the respective lines of the Alabama Great Southern Railroad Company and the Louisville and Nashville Railroad Company within the time and at the points agreed on, as is hereinabove fully set out and shown, the defendant has wholly failed and refused, and still fails and refuses, although often requested to do so, to pay to said plaintiff said sum of twenty-three thousand six hundred and seventy-five dollars, the balance due and unpaid upon said cash sum of thirty thousand dollars donated and agreed to be paid to plaint-

iff by said defendant upon the making of said connections as aforesaid, and by reason of the several matters and things set out and alleged herein the said defendant became, and is, indebted to the plaintiff in said sum of twenty-three thousand six hundred and seventy-five dollars, with interest thereon from date of the making of such connections, but has failed and refused, and still fails and refuses, to pay the same: wherefore this suit."

To the complaint the defendant filed a demurrer and also several pleas. The demurrer was to the effect that the contract set forth as the foundation of the action was without consideration and was contrary to public policy and void. The demurrer was overruled, and leave given to the defendent to file additional pleas. The original pleas were five in number, and to these six more were added. Of the original pleas one amounted to the general issue, denying the promise and undertaking in the manner and form alleged in the complaint; and one amounted to a plea of *ultra vires*, setting forth the charter of the defendant, showing the object of its incorporation to be the manufacture of pig metal and other products of iron ore, and their sale, connecting with that [651] business all such operations as are usual and incidental thereto, and denying authority, under the charter, to make the agreement mentioned in the complaint. A demurrer to this last plea was sustained by the court.

Of the additional pleas two only require notice—the 10th and 11th. The 10th plea is given in full below, and so much of the 11th plea as is necessary to its comprehension.

"Plea 10. And the said defendant, for further answer to the complaint, says that at the time of the making of the alleged agreement stated and set forth in the complaint, plaintiff was engaged in locating and constructing the Georgia Pacific Railroad under a contract with the Georgia Pacific Railroad Company, under and by which plaintiff agreed with said Georgia Pacific Railroad Company to locate and construct said railroad by the nearest, cheapest, and most suitable route, from Atlanta, Georgia, through Alabama to Columbus, in the State of Mississippi, for a consideration, to wit: twenty thousand dollars per mile for each and every mile of said road so located and constructed.

"That John W. Johnson, who negotiated and executed said contract with the defendant for plaintiff as vice-president, was, at the time said agreement was made, a stockholder and director of the Richmond and Danville Extension Company, and was also a stockholder and director and officer of the Georgia Pacific Railroad Company; that the Georgia Pacific Railroad Company was at said time, and is now, a separate and distinct company, and in no wise connected with plaintiff, except that some of the stockholders of said Georgia Pacific Railway Company were also stockholders in said Richmond and Danville Extension Company, and plaintiff was locating and constructing said road under its contract with said company as aforesaid

"That in causing said road to be built *via* Anniston it was necessary to deflect the same from its nearest, cheapest, and most natural route from Atlanta to Columbus a great number of miles, to wit, five miles, at a great additional cost to said Georgia Pacific Railroad Company, to wit, one hundred thousand dollars; and defendant avers that said alleged agreement on defendant's part to influence the [652] location of said railroad and to donate and pay to said plaintiff, among other things, the cash sum of thirty thousand dollars if plaintiff would locate and construct, or cause to be located and constructed, the railroad of the Georgia Pacific Railroad Company by way of the Town of Anniston, was and is contrary to public policy and void, and ought not to be enforced against defendant or in favor of plaintiff."

Plea No. 11, after repeating the first paragraph of plea No. 10, alleges "that John W. Johnston, who negotiated and executed said contract with defendant for plaintiff as vice-president, was at the time a stockholder, director, and officer of the Georgia Pacific Railway Company; and that he went to Anniston where defendant resided and did business, and represented to defendant that he was a director and officer of the Georgia Pacific Railway Company, and also a stockholder, director, and officer of the Richmond and Danville Extension Company, and could control and induce the location and construction of said Georgia Pacific Railroad *via* the Town of Anniston, and would do so if the defendant would donate and pay to plaintiff the said sum of thirty thousand dollars in cash, and deed to plaintiff, or as it might direct, the large quantity of real estate described in the complaint, which defendant avers was of value, to wit: twenty thousand dollars, and that said Johnston then and there informed the defendant that unless defendant acceded to his said demand to pay plaintiff said sum of money, and convey to plaintiff, or as it might direct, the large quantity of valuable real estate aforesaid, said road would not be constructed by the Town of Anniston, but would be constructed by way of the Town of Oxford, which said town is within three miles of the Town of Anniston, and is a rival market to said Town of Anniston, and thence direct to Birmingham, along the line of a preliminary survey already made; and to secure the location and construction of said road *via* the said town of Anniston, and to prevent the locating and building of said road by way of the rival Town of Oxford, to the exclusion of the Town of Anniston, defendant was forced to agree, and did agree, to pay the said sum of thirty thousand dollars in cash, and to [653] convey to plaintiff, or as it might direct, the large quantity of valuable lands described in the complaint, as aforesaid."

To these pleas a demurrer was filed by the plaintiff and sustained by the court. The case was then tried upon the general issue by a jury, which rendered a verdict in favor of the plaintiff, assessing its damages at $27,067.42, upon which judgment was entered with costs, to review which the case is brought here on writ of error.

Mr. **John B. Knox**, for plaintiff in error: The courts have uniformly held such contracts illegal.

Fuller v. *Dame*, 18 Pick. 472; *Holladay* v.

Patterson, 5 Oreg. 177; *Pac. R. Co.* v. *Seely*, 45 Mo. 212; *Bestor* v. *Wathen*, 60 Ill. 138; *Linder* v. *Carpenter*, 62 Ill. 309; *Marsh* v. *Fairbury, P. & N. W. R. Co.* 64 Ill. 414; *St. Louis, J. & C. R. Co.* v. *Mathers*, 71 Ill. 592; *Dudley* v. *Cilley*, 5 N. H. 558; *Dudley* v. *Butler*, 10 N. H. 281; *Cook* v. *Sherman*, 16 Am. & Eng. R. R. Cas. 561; *Davison* v. *Seymour*, 1 Bosw. 88; *Union Pac. R. Co.* v. *Durant*, 3 Dill. 343, 1 Cent. L. J. 581; *Western U. Teleg. Co.* v. *Union Pac. R. Co.* 3 Fed. Rep. 1; *Elkhart Co. Lodge* v. *Crary*, 98 Ind. 238; *Noel* v. *Drake*, 28 Kan. 265; *Byrd* v. *Hughes*, 84 Ill. 174; *Smith* v. *Applegate*, 23 N. J. L. 352; *Callagan* v. *Hallett*, 1 Caines, 104; *Wardell* v. *Union Pac. R. Co.* 103 U. S. 651 (26:509); *Koehler* v. *Black River Falls Iron Co.* 67 U. S. 2 Black, 715 (17:339).

The contract is *ultra vires*.

Pa. R. Co. v. *Canal Comrs.* 21 Pa. 22; *Rice* v. *Minn. & N. W. R. Co.* 66 U. S. 1 Black, 380 (17:153); *MacGregor* v. *Deal & D. R. Co.* 16 Eng. Law & Eq. 180; *Madison W. & M. Pl. Road Co.* v. *Watertown & P. Pl. Road Co.* 7 Wis. 59; *Cent. R. & Bkg. Co.* v. *Smith*, 76 Ala. 572; *Pearce* v. *Madison & I. R. Co.* 62 U. S. 21 How. 441 (16:184); *Morris & E. R. Co.* v. *Sussex R. Co.* 20 N. J. Eq. 542.

The doctrine of estoppel cannot be held to apply.

Marion Sav. Bank v. *Dunkin*, 54 Ala. 478; *Chambers* v. *Falkner*, 65 Ala. 448; *Grand Lodge of Ala.* v. *Waddill*, 36 Ala. 318; *Ex parte Burnett*, 30 Ala. 461; *Montgomery* v. *Montgomery & W. Pl. Road Co.* 31 Ala. 76; *Eufaula* v. *McNab*, 67 Ala. 588; *Cent. R. & Bkg. Co.* v. *Smith*, 76 Ala. 572; *State* v. *Stebbins*, 1 Stew. Ala. 308.

Mr. **H. C. Tompkins**, for defendant in error:

The demurrers raise every question that could be raised.

Chambers Co. v. *Clews*, 88 U. S. 21 Wall. 317 (22:517); *Junction R. Co.* v. *Bank of Ashland*, 79 U. S. 12 Wall. 226 (20:385); *Hanrick* v. *Andrews*, 9 Port. 9; *Pitman* v. *Kintner*, 5 Blackf. 250; *Rodgers* v. *Brazeale*, 34 Ala. 515; *Craig* v. *Missouri*, 29 U. S. 4 Pet. 410 (7:903); *Mason* v. *Eldred*, 73 U. S. 6 Wall. 231 (18:783); *Mut. L. Ins. Co.* v. *Harris*, 97 U. S. 331 (24:959).

The contract was *ultra vires*.

Ala. Gold L. Ins. Co. v. *Cent. A. & M. Asso.* 54 Ala. 77; Green's Brice, Ultra Vires 89; *Callaway Min. & Mfg. Co.* v. *Clark*, 32 Mo. 305; *Moss* v. *Averell*, 10 N. Y. 455.

Corporations are bound by contracts duly entered into by their directors, for purposes which they have treated as within the objects of their acts and which cannot be clearly shown not to fall within them.

Shrewsbury & B. R. Co. v. *North Western R. Co.* 6 H. L. Cas. 113, 124; Green's Brice, Ultra Vires, 38 and n. *a*; *Watts' App.* 78 Pa. 370, 392; 1 Waterman, Corp. 598-600; *Whitman Gold & S. Min. Co.* v. *Baker*, 3 Nev. 386; 1 Morawetz, Corp. § 362-4; *Merchants Nat. Bank* v. *Pomeroy Flour Co.* 41 Ohio St. 552; *Bradley* v. *Ballard*, 55 Ill. 413; *Madison, W. & M. Pl. Road Co.* v. *Watertown & P. Pl. Road Co.* 5 Wis. 173; *Wheeler* v. *San Francisco & A. R. Co.* 31 Cal. 46; *South Wales R. Co.* v. *Redmond*, 10 C. B. N. S. 674; *Hill* v. *Nisbet*, 100 Ind. 341; *Ellis* v. *Howe Machine Co.* 9 Daly, 78; 1 Morawetz, Corp. § 320; *Clarke* v. *Imperial Gas Light & C. Co.* 4 Barn. & Ad. 315.

The Sovereign alone can object.

Thomas v. *West Jersey R. Co.* 101 U. S. 85-86 (25:953); *Union Nat. Bank* v. *Matthews*, 98 U. S. 621 (25:188); *Rider L. Raft Co.* v. *Roach*, 97 N. Y. 378; *Chicago & A. R. Co.* v. *Derkes*, 1 West. Rep. 553, 103 Ind. 520; *Ward* v. *Johnson*, 95 Ill. 215; *Darst* v. *Gale*, 83 Ill. 136; *Oil Creek & A. R. R. Co.* v. *Pa. Transp. Co.* 83 Pa. 160; *Camden & A. R. Co.* v. *May's Landing & E. H. C. R. Co.* 4 Cent. Rep. 801, 48 N. J. L. 530; *Wright* v. *Pipe Line Co.* 101 Pa. 204; *Memphis & L. R. R. Co.* v. *Dow*, 19 Fed. Rep. 388; *Bissell* v. *Michigan Southern & N. I. R. Co.* 22 N. Y. 258; *Parish* v. *Wheeler*, 22 N. Y. 494; *Sturgeon* v. *Daviess Co.* 65 Ind. 302; Green's Brice, Ultra Vires, 729, note a; 2 Morawetz, Corp. § 689-696.

The stockholders cannot, after a third party has carried out in good faith his part of the contract, repudiate the liability of the corporation thereon.

Sheldon Hat Blocking Co v. *Eickemeyer Hat Blocking Mach. Co.* 90 N. Y. 607; *Stewart* v. *Erie & W. Transp. Co.* 17 Minn. 372; *Watts' App.* 78 Pa. 370; 2 Morawetz, Corp. § 625; *Chicago, R. I. & P. R. Co.* v. *Howard*, 74 U. S. 7 Wall. 392 (19:117); *Olcott* v. *Fond du Lac Co.* 83 U. S. 16 Wall. 678 (21:382); *Oates* v. *First Nat. Bank*, 100 U. S. 239 (25:580).

This court will not be bound by the decisions of the state courts on questions of general law.

Russell v. *Southard*, 53 U. S. 12 How. 147-8 (13:930, 931); *Neves* v. *Scott*, 54 U. S. 13 How. 268 (14:140); *Boyce* v. *Tabb*, 85 U. S. 18 Wall. 546 (21:757); *Burgess* v. *Seligman*, 107 U. S. 20 (27:359).

A company has the right to locate its line where it will and take advantage of such right to obtain such premises.

Cedar Rapids & St. P. R. Co. v. *Spafford*, 41 Iowa, 292; *McClure* v. *Mo. River, Ft. S. & G. R. Co.* 9 Kan. 373; *Chicago & A. R. Co.* v. *Derkes*, 1 West. Rep. 553, 103 Ind. 520; *Spartanburg & U. R. Co.* v. *DeGraffenreid*, 12 Rich. L. 675; *McMillan* v. *Maysville & L. R. Co.* 15 B. Mon. 218; *Rhey* v. *Ebensburg & S. Pl. Road Co.* 27 Pa. 261; *Jevett* v. *Lawrenceburgh & U. M. R. Co.* 10 Ind. 539; *Martin* v. *Pensacola & G. R. Co.* 8 Fla. 370; *Taggart* v. *Western Md. R. Co.* 24 Md. 563, 581-2; *Des Moines Valley R. Co.* v. *Graff*, 27 Iowa, 99; *First Nat. Bank* v. *Hurford*, 29 Iowa, 579; *Detroit, L. & L. M. R. Co.* v. *Starnes*, 38 Mich. 698; *Bucksport & B. R. Co.* v. *Brewer*, 67 Maine, 295; *Cumberland Valley R. Co* v. *Baab*, 9 Watts, 458, 2 Am. R. Cas. 187; *International & G. N. R. Co.* v. *Dawson*, 62 Tex. 260; *Chapman* v. *Mad River & L. E. R. Co.* 6 Ohio St. 120; *Pixley* v. *Gould*, 13 Bradw. 565; 2 Wood, R. Law, § 267.

The contract, even if voidable, is not so at the instance of the third party.

Twin-Lick Oil Co. v. *Marbury*, 91 U. S. 587 (23:328); *Thomas* v. *Brownville, Ft. K. & P. R. Co.* 109 U. S. 522 (27:1018); *Pneumatic Gas Co.* v. *Berry*, 113 U. S. 322 (28:1003).

There is no pretense of any actual fraud, and no facts are alleged from which it could be inferred.

Union Pac. R. Co. v. *Credit Mobilier*, 135 Mass. 367; *Alexander* v. *Williams*, 14 Mo. App. 13; *Kitchen* v. *St. Louis, K. C. & N. R. Co.* 69 Mo. 224; *Ashhurst's App.* 60 Pa. 291; *Euro-*

pean & N. A. R. Co. v. *Poor*, 59 Maine, 277.

A plea is not good which did not answer the whole complaint.

Smalley v. *Anderson*, 2 T. B. Mon. 56; *Logan* v. *Moulder*, 1 Ark. 313; *Goodrich* v. *Reynolds*, 31 Ill. 490.

[654] *Mr. Justice* **Field** delivered the opinion of the court:

As appears from the pleadings, which are set forth in the above statement, some time previous to November, 1881, the plaintiff below, the Richmond and Danville Extension Company, a corporation created under the Laws of New Jersey, entered into a contract with the Georgia Pacific Railway Company, a corporation created under the laws of Georgia, to locate and construct for the latter company, by the nearest, cheapest, and most suitable route, a railroad from Atlanta in Georgia through Alabama to Columbus in Mississippi, at the rate of $20,000 a mile, to be paid in whole or part in the bonds of the railroad company; and in November, 1881, it was engaged in locating and constructing the road under the contract. At that time the defendant below, the Woodstock Iron Company, a corporation created under the laws of Alabama for the manufacture and sale of products of iron ore, was doing business at the Town of Anniston in that State; and it then made a formal proposition in writing to the Extension Company that if it would locate and construct, or cause to be located and constructed, the railroad by way of the Town of Anniston, then the Iron Company would donate and convey, or cause to be donated and conveyed, to the Extension Company sundry parcels of land both within and without the corporate limits of [655] the town, for the location of the road, and which might be necessary for sidings or spare tracks; and would also donate and pay to the Extension Company $30,000, one half when the road made a connection with the line of the Alabama Great Southern Railroad Company at Birmingham, Alabama, and the other half when the road made a connection with the line of the Louisville and Nashville Railroad Company at that place; the payments to be made provided the road should be so far completed as to make the connections designated within three years. The proposition was formally accepted in writing by the Extension Company, through its vice-president, John W. Johnston.

Pursuant to this contract the Extension Company located and constructed the railroad by way of the Town of Anniston by the first of January, 1883, and made the connections specified, within the period designated, and complied in every respect with its terms.

The Woodstock Iron Company complied with the contract only in part. At the request of the Extension Company it conveyed to the railroad company the several parcels of land mentioned, and also upon like request furnished it with cars to the value of $6,325. For the balance, amounting to $23,675, the present suit was brought, and the principal question presented to the court below, and to this court, is whether the contract is obligatory upon the defendant, or whether it is void as being against public policy.

In determining this question, it must be borne in mind that the contract of the Extension Company with the Georgia Pacific Railway Company was to locate and construct the road "by the nearest, cheapest and most suitable route from Atlanta, Georgia, through Alabama to Columbus in Mississippi," for the consideration of $20,000 a mile, and that it is averred in the pleadings and admitted by the demurrer, that in causing the road to be located by way of Anniston, it was necessary to deflect the same from the nearest and cheapest and most natural route between the designated termini, a distance of five miles, at an additional cost of $100,000. In the light of these facts there can be but one answer given to the question pre- [656] sented respecting the contract between the Iron Company and the Extension Company, namely: that it was a void contract, immoral in its conception and corrupting in its tendency. It was a contract by an employé of a railroad company with a third party, for a consideration to be received from that third party, to violate its engagement with its employer in the important business of locating and constructing a railroad, and instead of selecting the shortest, cheapest, and most suitable route, to locate the road by a longer route, and thus impose an unnecessary and heavy burden upon its employer. The proposition of the Iron Company, which was accepted, was to pay the Extension Company for a breach of its duty. In plain language, it was nothing less than the offer of a bribe to the latter company to be faithless to its engagements, and to do with reference to the business in which it was engaged what would amount to little less than robbery of its employer. The transaction on the part of the Iron Company was none the less offensive, because of the threats of the Extension Company, made by its vice-president, who was also a director and stockholder of the railroad company, that, if the land and money mentioned were not donated, it would cause the road to be located away from Anniston by the rival Town of Oxford. The threats did not excuse, much less justify, the offer.

We have thus far considered the case as one only between private parties, where an employé has agreed, for a money consideration, to violate his obligation to his employer; but there are other circumstances which add to the offensiveness of the transaction. The business of the Extension Company was one in which the public was interested. Railroads are for many purposes public highways. They are constructed for the convenience of the public in the transportation of persons and property. In their construction without unnecessary length between designated points, in their having proper accommodations, and in their charges for transportation, the public is directly interested. Corporations, it is true, formed for their construction are private corporations; but whilst their directors are required to look to the interests of their stockholders, they must [657] do so in subordination to and in connection with the public interests, which they are equally bound to respect and subserve. All arrangements, therefore, by which directors or stockholders or other persons may acquire gain, by inducing those corporations to disregard their duties to the public, are illegal and lead to unfair dealing, and thus being against public policy will not be enforced by the courts. In

this case the Extension Company, to which the duty of locating and constructing the railroad between its termini was intrusted, in agreeing, for a consideration offered by a third party, to disregard that duty and locate and construct the road by a longer route than was required, not only committed a wrong upon the railroad company by thus imposing unnecessary burdens upon it, to meet which larger charges for transportation might be called for, but also a wrong upon the public.

The case of *Fuller* v. *Dame* is instructive on this head. (18 Pick. 472.) It there appeared that Dame, the defendant, was the owner of a large tract of land and flats situated on Sea Street, and between it and Front Street, on the south side of Boston, which would be greatly enhanced in value if the Boston and Worcester Railroad Company would locate one of its depots between those streets and easterly of Front Street. To induce the company to make such location it was supposed to be necessary to form an association, which would pay to it a large sum of money and furnish a large tract of land for the depot, besides making other donations; and to provide the money and land, also to form a Company to purchase the flats and land between the streets named, to be held as joint stock and laid out in due form and shape for sale. Fuller agreed to aid Dame in getting up such company, and in inducing the railroad company to fix its termination and principal depot between those streets, Fuller being himself of opinion that the railroad ought, from a view of the public good and the good of its stockholders, to enter the city on the southerly side and have its principal depot there. In consideration of such agreement Dame gave his note for $9,600, payable to Fuller in three years, the note being deposited with [658] third parties, to be delivered to him when the principal depot of the railroad company for merchandise was constructed between the streets mentioned. Fuller was at the time of the agreement a stockholder in the railroad company. The road having been completed, and the principal depot located between the streets mentioned, and the note not being paid, suit was brought upon it. It was adjudged that the contract was contrary to public policy, and that the note given in consideration of it was therefore void. In coming to this conclusion the court considered somewhat at large the ground upon which contracts of this character were avoided, and held that it was because they tended to place one under wrong influences, by offering him a temptation to do that which might injuriously affect the rights and interests of third persons, and that the case before it was within the operation of this principle, the contract tending injuriously to affect the public interest in establishing the fittest and most suitable location for the termination of the Boston and Worcester Railroad for the accommodation of the public travel. It is true the road was constructed and located by the corporation at the expense of private parties under the sanction of the Legislature, incorporated for that purpose, who were to be remunerated by a toll levied and regulated by law; and it was left to its directors to fix the termination and place of deposit. But the court added: "In doing this a confidence was reposed in them, acting as agents for the public, a confidence which, it seems, could be safely so reposed, when it is considered that the interests of the corporation as a company of passenger and freight carriers for profit was identical with the interests of those who were to be carried, and had goods to be carried, that is, with the public interest. This confidence, however, could only be safely so reposed under the belief that all the directors and members of the company should exercise their best and their unbiased judgment upon the question of such fitness, without being influenced by distinct and extraneous interests, having no connection with the accommodation of the public or the interests of the company. Any attempt therefore, to create and bring into efficient operation such undue influence has all the injurious effects of a fraud upon the public, by causing a question [659] which ought to be decided with a sole and single regard to public interests, to be affected and controlled by considerations having no regard to such interests. It is no answer to say that, by the Act of incorporation, the executive authority was vested in a board of directors, and Mr. Fuller was not a director. He was a member of the company and might be chosen a director. He was an elector of the directors, and they were directly responsible to the stockholders. The immediate act of location was with directors, but the efficient authority was with the members and stockholders of the corporation, who elect the directors. The election may depend upon the known views and opinions of candidates upon this very question of location. They had a right to his disinterested judgment and advice upon the question of location; and this could not be exercised whilst he held and relied on a promise for a large sum of money, the payment of which depended upon this decision of the question by the directors."

The case before us is much stronger than the one thus decided by the Supreme Judicial Court of Massachusetts. There the contract was held invalid because made with a stockholder of the company, by which he promised, for a pecuniary consideration, to endeavor to procure the company to locate one of its depots at a particular place in the city. Here the contract was with an employé of the company, to induce it to disregard its obligations; and the principal person making that contract on the part of the employé was a director and stockholder of the company which was to be thus seriously affected.

The principle, which is so clearly and forcibly stated in *Fuller* v. *Dame*, has been applied in numerous instances by the highest courts of different States, to avoid contracts made to influence railroad companies in selecting their routes and locating their depots and stations, by donations of land and money to some of its directors or stockholders or agents. Thus in *Bestor* v. *Wathen*, 60 Ill. 138, it appeared that in 1849 the Legislature of Illinois incorporated a company to build a railroad from a point on the Mississippi River to Peoria, and that in 1852 the charter was amended so as to authorize the extension of the road from Peoria eastward to the state [660] line. In 1855 the company made a contract with the firm of Cruger, Secor and Company, by which the latter undertook the construction and

equipment of the road. In 1856, whilst engaged upon this work, the members of the firm, together with Bestor, the president of the railroad company, Sweat, one of its directors, and Smith, its construction agent, entered into a contract with Wathen and Gibson, the defendants, by which the latter, being the owners of 160 acres of land, agreed, in consideration that the road then in process of construction should cross the Illinois Central Railroad where their land was situated, the land would be laid out into town lots and sold, and after proceeds amounting to $4,800 had been received, which were to be retained by Wathen and Gibson, a conveyance of an undivided half of the residue should be made to the other parties. The only consideration for this agreement, aside from the location of the road, was that the other parties should assist and contribute to the building up of the town on the land. The road was constructed across the Illinois Central, and Wathen and Gibson laid out the land into lots and proceeded to sell the same, and the Town of El Paso was built on the land and an adjoining tract. In 1863 the plaintiffs filed their bill against Wathen and Gibson for an account of the sales and a conveyance of the undivided half of the lots unsold. The court held the contract void as against public policy, and dismissed the suit, and the decree in this respect was affirmed by the supreme court of the State, that court observing that when the people through their Legislature grants to a company the right of eminent domain for the purpose of constructing a railroad it is upon the supposition that the road will bring certain benefits to the public, and that when subscriptions are made to its stock, the money is subscribed upon the understanding that the officers intrusted with the construction of the road will so locate its line and establish its depots as to bring the highest pecuniary profit to the stockholders compatible with a proper regard for the public convenience; that these alone are the considerations which should control officers of the road; and so far as they permit their official action to [661] be swayed by their private interests, they are guilty of a breach of trust towards the stockholders, and a breach of duty to the public at large; and it added: "A court of equity will not enforce a contract resting upon such official delinquency, or even tending to produce it. Such is the character of the contract before us. If we enforce it we lend the sanction of the court to a class of contracts, the inevitable tendency of which is to make the officers of these powerful corporations pervert their trust to their private gain, at the price of injury at once to the stockholders and to the public. Rendered into plain English, the contract in this case was a bribe on the part of Wathen and Gibson to the president and other officers of the railway company, and to the contractors who were building the road, of an undivided half of one hundred and sixty acres of land, in consideration of which the road was to be constructed on a certain line and a depot built at a certain point. Now if this was the best line for crossing the Illinois Central considered with reference to the interest of the stockholders and of the public, then it was the duty of the officers of the company to establish it there; and if they intended so to do because it was the proper line, but professed to be hesitating between this and another line in order to secure to themselves the contract under consideration, as is somewhat indicated by the evidence, then they were practicing a species of fraud upon the defendants, and the use of a false pretext in order to acquire defendant's property without consideration. If on the other hand this line was not the best, but was adopted because of this contract, the case is still stronger against the complainants. If such was the fact they are asking the court to enforce the payment of a bribe, the promise of which induced them to sacrifice their official duty to their private gain. If, as a third contingency, the choice lay between this line and another equally good, but not better, and they were influenced by this contract to adopt this line, then, although neither the company nor the public has been injured, yet the defendants have made their official power an instrument of private emolument in a manner which no court of equity can sanction. In this particular case no wrong may have been done, and yet public policy plainly forbids the sanction of such contracts, [662] because of the great temptation they would offer to official faithlessness and corruption." The doctrine of this case was approved by the Supreme Court of Illinois in *Linder* v. *Carpenter*, 62 Ill. 309; and in *St. Louis, J. & C. R. Co.* v. *Mathers*, 71 Ill. 592.

Holladay v. *Patterson*, decided by the Supreme Court of Oregon (5 Oreg. 177), is also in harmony with *Fuller* v. *Dame*, and *Bestor* v. *Wathen*, the court following a similar course of reasoning to that adopted in those cases. That doctrine and reasoning are also often applied where the reward or money consideration for taking a particular route or establishing a station or depot at a particular place is offered directly to the railroad conpany instead of to its directors, stockholders, or agents. But we do not refer to them, because there are exceptions or qualifications in the application of the doctrine in such cases requiring explanation, as where a subscription is conditioned upon the adoption of a particular route, or the construction of a station or depot at a particular place. *Pacific R. Co.* v. *Seely*, 45 Mo. 212; *Racine Co. Bank* v. *Ayers*, 12 Wis. 512; *Fort Edward & F. M. Pl. Road Co.* v. *Payne*, 15 N.Y. 583. There is no exception in any decision called to our attention as to the character of a contract when for a pecuniary consideration directors, stockholders, or agents of a company undertake to influence its conduct in these matters. Indeed, the law is general that agreements upon pecuniary considerations, or the promise of them, to influence the conduct of officers charged with duties affecting the public interest, or with duties of a fiduciary character to private parties, are against the true policy of the State, which is to secure fidelity in the discharge of all such duties. Agreements of that character introduce mercenary considerations to control the conduct of parties, instead of considerations arising from the nature of their duties and the most efficient way of discharging them. They are, therefore, necessarily corrupt in their tendencies. As we said in *Providence Tool Co.* v. *Norris*, 69 U. S. 2 Wall. 48, 56 [17: 868, 871], "that all agreements for pecuniary considerations to control the business operations of the [663]

Government, or the regular administration of justice, or the appointments to public offices, or the ordinary course of legislation, are void as against public policy, without reference to the question whether improper means are contemplated or used in their execution," so we say of agreements like the one in this case: they are against public policy because of their corrupt tendency, whether lawful or unlawful means are contemplated or used in carrying them into execution. "The law," as said in that case, "looks to the general tendency of such agreements; and it closes the door to temptation by refusing them recognition in any of the courts of the country." *Oscanyan* v. *Arms Co.* 103 U. S. 261, 274 [26: 539, 545].

From the views expressed it follows that the Court below erred in sustaining the demurrers to the special pleas above mentioned; and it is not necessary, therefore, to consider the other pleas. The judgment must be reversed and the cause remanded with instructions to overrule the demurrers to the above pleas, and take further proceedings not inconsistent with this opinion; and it is so ordered.

---

[590] STEWART B. SHOTWELL, *Plff. in Err.*,

v.

SAMUEL A. MOORE, as Treasurer of HARRISON COUNTY, OHIO.

(See S. C. Reporter's ed. 590-601.)

Evasion of taxation—Statute of Ohio.

1. Where a person has in bank, on general deposit subject to his order, moneys, and a day or two previous to the day fixed by the statute of the State for the assessment of property for taxation, draws out such moneys on a check, receiving the amount thereof in legal tender notes of the United States, which he incloses in an envelope, and places with the bank as a special deposit, writing his name thereon, and requesting the bank to put it in its safe for him, and within a week after the assessment, he takes the same greenbacks which he had placed on special deposit and immediately restored them to the bank as a general deposit, subject to his order; and all this was done for the purpose of avoiding payment of taxes on the moneys,—*held*, that this was an attempted evasion of the taxing laws of the State.

2. The Statute of Ohio which provides for the ascertainment of the monthly average amount or value of the property or goods held by persons during the preceding year, and for the assessment for taxation on that basis, is valid.

[No. 1030.]

Argued Jan. 30, 1889. Decided March 5, 1889.

IN ERROR to the Supreme Court of the State of Ohio, to review a judgment of that Court affirming the judgment of the Circuit Court of the State for the amount of a tax. *Affirmed.*

Reported below; 14 West. Rep. 167, 45 Ohio St. ——.

The facts are stated in the opinion.

Messrs. **Richard A. Harrison** and **T. D. Lincoln**, for plaintiff in error:

The yearly levy for the tax exhausts the power for the year.

Cooley, Taxn. 256; *Otis* v. *Boston*, 12 Cush. 44, 48.

It is immaterial whether the tax is directly upon the obligations *eo nomine*, or is indirectly upon the obligations by levying it upon the means put into the obligations.

McCulloch v. *Md.* 17 U. S. 4 Wheat. 316 (4:579); *Bank of Commerce* v. *N. Y.* 67 U. S. 2 Black, 620 (17:451); *Bank Tax Case*, 69 U. S. 2 Wall. 200 (17:793); *Banks* v. *N. Y.* 74 U. S. 7 Wall. 16 (19:57); *Weston* v. *Charleston*, 27 U. S. 2 Pet. 449 (7:481); *People* v. *New York Co.* 74 U. S. 7 Wall. 26 (19:60); *Ogden* v. *Walker*, 59 Ind. 460.

The assessment against the shareholders was void because the assessors failed to observe a condition precedent to their right to assess.

Albany City Nat. Bank v. *Maher*, 19 Blatchf. 182.

If the tax was illegal, the party had a remedy at law.

Greene v. *Mumford*, 5 R. I. 472; *Kellogg* v. *Ely*, 15 Ohio St. 64.

The Constitution permits no deduction of liabilities from moneys and credits.

Latimer v. *Morgan*, 6 Ohio St. 279; *Champaign Co. Bank* v. *Smith*, 7 Ohio St. 42, 57; *Payne* v. *Watterson*, 37 Ohio St. 121, 125.

Messrs. **D. A. Hollingsworth**, *John M. Garven, County Solicitor*, Harrison County, and **David K. Watson**, *Atty-Gen.* of Ohio, for defendant in error.

Mr. Justice **Miller** delivered the opinion of the court: [591]

This writ of error to the Supreme Court of the State of Ohio brings up for review a judgment of that court concerning the taxation by the state authorities imposed upon the plaintiff in error, Stewart B. Shotwell, as the owner of a certain amount of United States legal-tender treasury notes, commonly called "Greenbacks." The case was tried in the Court of Common Pleas of Harrison County, Ohio, by the court; without a jury, by consent of parties; and that court found the following conclusions of fact and law, under the provision of the state statute, upon which all the subsequent proceedings have been based:

"The parties to this cause having waived a jury, the same came on for trial to the court, and the parties, with a view of excepting to the decision of the court upon the questions of the law involved in the trial, having requested the court to state in writing the conclusions of fact found separately from the conclusions of law, and the testimony having been heard, the court finds as conclusions of fact as follows: [592]

"That the defendant is and for many years has been a resident of Harrison County, Ohio; that on the Saturday preceding the second Monday of April, in the years 1881, '82, '83, '84, and '85, the defendant had on deposit in bank, at the Town of Cadiz, in said county, to his credit as a general depositor, the following sums: In 1881, $30,900; in '82, $26,900; in '83, $29,550; in '84, $18,560; in '85, $4,700; that on said Saturday in each of said years he checked out the said balance so standing to his credit, and at his request the same was paid to him in United States securities commonly called 'greenbacks:' that on each occasion after counting the money so paid to him he inclosed the same in a package, wrote his name thereon, and returned the same to the officer of the bank, requesting him to place the same in the bank's safe for him, which

was done. On no occasion did the defendant carry the money out of the bank building; and in the early part of the next week in each of said years he returned to the bank and demanded his package, which was given him, and he opened the same and delivered it to an officer of the bank, asking that the amount should be placed to his credit as a general depositor, which was done; that on each occasion the defendant drew out the balance due him with intent to obtain nontaxable securities, and thereby evade taxation on such balance; but that on each occasion during the time which intervened between the withdrawal and the subsequent deposit as a general depositor he was *bona fide* the absolute owner of the money so withdrawn, and the same was subject to his disposal; that he did not in either of said years list for taxation any part of the money so paid to him, nor did he list the monthly average amount of value, for the time he held or controlled the same within the preceding year, of [593] any moneys, credits, or other effects within that time invested in or converted into the said securities so by him drawn out of bank, and that said monthly average amount so invested by the defendant in such securities within the years, respectively, preceding the drawing out of said moneys was the amount so drawn out at the end of the year; that the auditor of said county placed said several sums upon the duplicate of said county for the year 1885, except for the year '85 he erroneously placed $4,949, with fifty per cent added thereto, making $7,420; whereas, the data before him and by which he should have been controlled authorized only $4,700, which with fifty per cent added would make $7,050; and the court further finds that the amount of taxes chargeable upon the agregate of said several sums, if the same are subject to taxation, is $2,317.05, and that said duplicate was delivered to the treasurer of said county for collection.

"And the court being of opinion that, upon the facts so found, the law of this case is with the defendant, it is thereupon considered that the defendant recover of the plaintiff his costs herein expended, taxed at $20.60; to which ruling of the court as to the law of the case and to the judgment so rendered the plaintiff excepts."

The case was taken by appeal to the circuit court of the State, where the decision of the court of common pleas was reversed, and judgment rendered for the amount of the tax sued for against Shotwell. This was carried to the Supreme Court of the State, in which the decision of the circuit court was affirmed. To review that judgment this writ of error is prosecuted.

The error assigned is that the tax levied and enforced by this judgment was upon notes of the United States, which is forbidden by the Revised Statutes of the United States in the following language:

"SEC. 3701. All stocks, bonds, treasury notes, and other obligations of the United States shall be exempt from taxation by or under State or municipal or local authority."

And that the Supreme Court of Ohio erred in holding that section 2787 of the Revised [594] Statutes of the State, passed June 20, 1879, to take effect January 1, 1880, is not in violation of, nor repugnant to, the section above quoted.

It is not controverted by counsel for defendant in error that under the United States Law the greenbacks were not subject to taxation, or that if the Ohio Statute, when properly construed, authorizes such taxation it is to that extent invalid. But the question presented to [595] us for consideration is whether the tax levied in this case by the authorities of the State was a tax upon the legal-tender notes issued by the Government in the hands of Shotwell.

It is conclusively shown by the finding of facts that prior to the day to which the assessment of property for taxation relates by the Laws of Ohio, Shotwell had in his bank, on general deposit, subject to his order at the Town of Cadiz, in the County of Harrison, in the previous years of 1881, 1882, 1883, 1884, and 1885, the sums of money on which the taxes here in controversy were assessed; but it is claimed by him that, a day or two previous to that fixed by statute, he had, in each of those years, drawn out the balance of his general deposit account on a check, and, in each case receiving the amount of it in legal-tender notes, had put them into a package, which he inclosed in an envelope, and placed with the bank as a special deposit, writing his name thereon, and requesting the bank to put it in its safe for him, which was done.

Arguing from the proposition that the assessment for an entire year, under the Laws of Ohio, must be made on the particular day mentioned in the statute, and that these greenbacks were his property on that day, it is insisted, with great earnestness by counsel, that the amount of the package thus on special deposit on that day could not be taxed by the state authorities. To this general proposition there does not appear to be any valid objection if the thing done had been in the ordinary course of business, and the conversion of his general deposit in the bank into a private package of greenbacks, exempt from taxation, were free from illegal purpose or fraudulent motive. But since it is found as a matter of fact that the whole transaction was made for the purpose of evading taxation on the amount of his general deposit on the day it was exchanged for greenbacks, and that there was no purpose of permanently changing the amount of the deposit in the bank subject to his order, and, as such, liable to taxation, it is argued by counsel that it was a fraud upon the Revenue Laws of the State of Ohio.

For all of the years mentioned the same process was gone through with, and in every in- [596] stance, within a week after the assessment, the plaintiff in error took the same greenbacks which he had placed on special deposit and immediately restored them to the bank as a general deposit, subject to his order; in other words; he remanded the amount to the condition in which it would have been liable to taxation if the period of assessment were not limited to the particular day mentioned in the statute.

It does not need the finding of the court below as a fact to show that this was an evasion, and a discreditable one, of the taxing laws of the State, if it could be made successful. It is, therefore, urged that on this ground alone—the illegal purpose for which the transactions were

made in the bank—the court should hold the plaintiff in error liable to taxation for the amount thus converted. Several decisions on this subject by state courts, holding this view, are cited in the brief of counsel. They are directly in point, and relate to attempts of precisely the same character to effect a similar evasion of taxation on property otherwise liable thereto. Among these are *Holly Springs Sav. & Ins. Co.* v. *Marshall Co.* 52 Miss. 281; *Jones* v. *Seward Co.* 10 Neb. 154; and *Poppleton* v. *Yamhill Co.* 8 Oreg. 337. From the latter case we quote the following language:

"If a taxpayer, having a large amount of notes and mortgages, in order to escape the payment of taxes on the same, borrows a sum of money of a person residing out of the county, and deposits with his creditor such notes and mortgages, for the purpose of avoiding the payment of taxes on the same, such notes are taxable in the county where such taxpayer resides; and such deposit or transfer is a fraud on the revenues of the county."

And this court in *Mitchell* v. *Leavenworth County*, 91 U. S. 206 [28:302], denounces conduct precisely similar to that of the plaintiff in error in this case, in the following language:

"United States notes are exempt from taxation by or under state or municipal authority; but a court of equity will not knowingly use its extraordinary powers to promote any such [597] scheme as this plaintiff devised to escape his proportionate share of the burdens of taxation. His remedy, if he has any, is in a court of law."

The circumstances of that case are precisely like those in the case before us. The taxpayer converted, in the same manner as Shotwell did, about nineteen thousand dollars in current funds on general deposit in his bank into the same value in greenbacks, and placed them in a package which he put in the vault of the bank for safe keeping. This was on February 28. On March 8, following, he withdrew this package, and deposited the notes to his general credit. This was done for the sole purpose of escaping taxation upon his money on deposit in the bank. That case only differs from the one at bar in the fact that the revenue officer proceeded to collect the tax assessed by distress, which compelled the defendant to resort to a court of equity to enjoin the proceedings; but this court held that the transaction was so inequitable that it would not be sustained in a court of chancery.

Instead of pursuing that method of collecting the tax in the present case, as the treasurer of the county had a right to do under the Laws of Ohio, he brought an action at law against the taxpayer. It is now asserted that although the opinion of this court in *Mitchell* v. *Leavenworth County* holds that the party assessed can have no relief in a court of equity, still he might have, when sued at law, or in any manner where the issue could be heard in a court of law as distinguished from a court of equity.

All these decisions show that the courts look upon this transaction as indefensible, and consider it an improper evasion of the duty of the citizen to pay his share of the taxes necessary to support the Government which is justly due on his property.

Waiving the question whether these equitable considerations would constitute a defense in an action at law to collect the tax in suit, we proceed to inquire whether the Statute of Ohio made all assessment for taxes relate by an iron rule to the day preceding the second Monday in April, and to property possessed on that particular day, and that only. Is such a construction of the Law of the State of Ohio a proper one?

It is to be conceded that a State may make [598] the ownership of property subject to taxation relate to any day, or days, or period of the year, it may think proper, and that the selection of a particular day on which returns are to be made by taxpayers of their property for the purposes of assessment does not necessarily preclude the making of assessments as of other periods of the year. The State of Ohio, like many, and perhaps most of the other States, collects from the business and property subject to taxation for the year preceding the specified date, the elements of an assessment of a tax to be paid by the taxpayer for the year succeeding that date, and it has in several instances recognized the fact that an assessment which assumed that all property should only be assessed to those who were the owners of it on the precise date named was not a just apportionment. Assessments of land are made once in ten years, with such additions every year as the value of improvements justifies. So in the case of merchants engaged in buying and selling goods, the stock on hand on that day might be either the largest or the smallest of any period during the year preceding. If it were either, a tax intended to be governed by the amount of property owned or held by them during such year would be evidently unjust either to them or to the State.

To avoid this evil the statute in Ohio provides for the ascertainment of the monthly average amount or value of the property or goods in which such parties were dealing, and for the assessment for taxation on that basis. Many kinds of business must be of this character.

The Legislature, perceiving the facility with which negotiable securities and other rights and credits which were liable to taxation might be exchanged for greenbacks at the time the assessment for taxation was made, and after the assessment was over replaced in the form in which they had been, applied this principle, by special provision of the statute, to that form of property. In this they showed a wise forecast. So far as we can see, the statute which does this does not tax the citizen for the greenbacks which he may have held at any time during the year, but taxes him upon the money, credits, or other capital which he has had and used, ac- [599] cording to the average monthly amount he has so held.

Such we understand to be the purpose and effect of the section complained of by counsel, to wit: subdivision sixteen of section 2737 of the Revised Statutes of Ohio. We do not see any objection to that State endeavoring to arrive at the average monthly amount or value of the moneys, credits, or other effects of the citizen subject to taxation within the preceding year, and ascertaining in a similar manner the average amount of his securities, either state or national, for the same period, not subject to taxation, in order to fix a basis for assessment. It is certainly a much more equitable mode of

determining how much of his property for the year preceding the assessment is liable to taxation, and how much is exempt, and more nearly effects the purpose of the federal statute as well as that of the State of Ohio, to exempt the one and to tax the other, than a rule which assumes that the condition of the means and property of the taxpayer at a certain hour of a particular day in the year shall constitute the basis of his taxation for the entire year.

It needs no other evidence that the rule adopted by the State of Ohio is the better one than the case before us, by which a possessor of large means subject to taxation during every day in the year but one may escape the payment of any tax on all of his property if the trick resorted to in the present case be successful; and the cases which we have cited from the other state courts, as well as the opinion referred to of this court, clearly show the wisdom of the Legislature of Ohio in protecting itself against the effects of the rule here contended for.

Section 2737 of the Ohio Statutes, which prescribes the character of the statement to be made by persons holding moneys, credits, or investments, such as are described, and which are subject to taxation, declares that such statement shall truly and distinctly set forth, among other things, "moneys on hand or on deposit subject to order," and "the amount of credits as hereinbefore defined." Subdivision sixteen requires a statement of "the monthly average amount or value, for the time he held or controlled the same, within the preceding year, of all moneys, credits, or other effects within that time invested in, or converted into, bonds or other securities of the United States or of this State not taxed, to the extent he may hold or control such bonds or securities, on said day preceding the second Monday of April; and any indebtedness created in the purchase of such bonds or securities shall not be deducted from the credits under the fourteenth item of this section."

[600]

Of the right of the State of Ohio to make this provision we have no doubt. Its purpose is, not to enable that State to tax the securities of the United States, but to permit it to tax other investments, moneys on hand and on deposit subject to order, while it combines in the same exemption the securities of the General Government and those of the State. We know of no principle which forbids that State from taking the whole period of a business year already past as the best means of ascertaining how much the taxpayer shall be required to pay on property which is admitted to be taxable, and how much he shall deduct for the nontaxable securities of the State and of the United States.

As this was the method under which the plaintiff in error in this case was taxed, and as he was charged with no more than he was liable to pay under a wise and equitable law, we do not see any error in the judgment of the Supreme Court of Ohio and it is accordingly affirmed.

Mr. Justice **Bradley** dissenting:

I dissent from the judgment. I do not defend Mr. Shotwell; but it is a question of law, and the law of Ohio seems to me repugnant to the Act of Congress which exempts the securities of the United States from taxation.

The law is this: the property that a man has on the second Monday in April is the amount of property which he is to return for taxation that year. Now, if a man chooses to buy United States securities one month or one day before that time, he has a perfect right to do it, and as the Act of Congress declares that United States securities shall not be taxed, the State has no right to tax him for them. But the Legislature of the State of Ohio undertook to get around that law in this way: they say that a man shall not be exempted from taxation for United States securities owned by him on the second Monday in April, only in proportion to the time that he has held them, so that if he has held them only one day he would be exempted only one 365th part of the amount; whilst, if the man of whom the taxpayer bought them, held them 364 days, he would get no exemption at all; he would be taxable for the consideration which he received for the securities and which he held on the second Monday in April. Therefore, in Ohio United States securities are only exempted from taxation in a limited manner, that is, in proportion to the time they have been held. All other property is treated differently. If anything is unconstitutional, it seems to me that this is.

[601]

END OF VOL. 129.

CASES

ARGUED AND DECIDED

IN THE

SUPREME COURT

OF THE

UNITED STATES

IN

OCTOBER TERM, 1888.

Vol. 130.

REFERENCE TABLE

OF SUCH CASES

DECIDED IN U. S. SUPREME COURT,

OCTOBER TERM, 1888,

AND REPORTED HEREIN,

VOL. 130,

AS ALSO APPEAR IN

OFFICIAL REPORTER'S EDITION.

Off. Rep. 130 U. S.	Title.	Here in.
1	Oregon Railway & Nav. Co. v. Oregonian R. Co.	837
2- 4	" " " "	838
4-20	" " " "	839
20-22	" " " "	840
22-25	" " " "	841
25-28	" " " "	842
28-31	" " " "	843
31-34	" " " "	844
34-37	" " " "	845
37-39	" " " "	846
39-41	Badger v. Cusimano	851
41-43	" "	852
43	Parker v. Dacres	848
44-46	" "	849
46-49	" "	850
49-50	" "	851
50	Ballard v. Searls	846
51-54	" "	847
54-56	" "	848
56	Collins Company v. Coes	858
66-68	" " "	862
68-69	" " "	863
69	Arkansas Valley Land & Cattle Co. v. Mann	854
70-73	" " " "	855
73-76	" " " "	856
76-79	" " " "	857
79	" " " "	858
80	United States v. Watson	852
80-83	" "	853
83	" "	854
83	Calton v. Utah	870
84-87	" "	871
87	" "	872
87	Brown v. District of Columbia	863
99-100	" " "	868
100-103	" " "	869
103	" " "	870
104-106	Richardson v. Green; Nelson v. Green; Sickles v. Green	872
106-109	Richardson v. Green	873
109-112	" "	874
112-115	" "	875
115-116	" "	876
117-118	Thompson v. Hall	876
118-121	" "	877
121-122	" "	878
122	Moore v. Crawford	878
128-129	" "	880
129-132	" "	881
132-135	" "	882
135-138	" "	883
138-141	" "	884
141-142	" "	885
142-143	Bullitt County v. Washer	885
143-146	" " "	886
146-149	" " "	887
149-152	" " "	888
152	Rude v. Westcott	888
162-163	" "	893
163-166	" "	894
166-167	" "	895
167	Smith v. Adams	895
173	" "	897
174-176	" "	898
176-177	" "	899
177	Lyon v. Alley	899
183	" "	901
183-186	" "	902
186-189	" "	903
189	" "	904
189	Williamson v. New Jersey	915
190-192	" "	916
192-196	" "	917
196-197	" "	918
197-200	" "	919
200	" "	920
201	The Alaska	923
201-203	"	924
203-209	"	925
210	Baltimore & Potomac R. R. Co. v. Hopkins	903

Off. Rep. 130 U. S.	Title.	Here in.
221–222	Baltimore & Potomac R. R. Co. v. Hopkins	912
222–225	" " "	913
225–226	" " "	914
227–228	District of Columbia v. Gannon	922
228–229	" " "	923
229–230	District of Columbia v. Emerson	923
230	Stevens v. Nichols	914
231–232	" "	915
232–234	Buxton v. Traver	920
234–237	" "	921
237	" "	922
238	Botiller v. Dominguez	926
238–244	" "	927
244–247	" "	928
247–250	" "	929
250–253	" "	930
253–256	" "	931
256	" "	932
256–257	Parley's Park Silver Mining Co. v. Kerr	906
257–260	" " "	907
260–262	" " "	908
263–264	United States v. Insley	968
264–266	" "	969
267	Manhattan Bank of Memphis v. Walker; Walker v. Manhattan Bank of Memphis	959
268–269	" "	960
269–272	" "	961
272–275	" "	962
275–278	" "	963
278–280	" "	964
280–282	United States v. Pile	904
282–283	" "	905
284–286	Davies v. Miller	932
286–289	" "	933
289–291	" "	934
291	Hammer v. Garfield Mining & Milling Co.	964
292–294	" " "	965
294–296	" " "	966
296–300	" " "	967
300–301	" " "	968
301	Amy v. Watertown (No. 1.)	946
302–305	" "	947
305–308	" "	948
308–311	" "	949
311–314	" "	950
314–317	" "	951
317–319	" "	952
319–320	" "	953
320	Amy v. Watertown (No. 2.)	953
320–322	" " "	954
322–325	" " "	955
325–327	" " "	956
327	Spalding v. Watertown	956
327–328	Knowlton v. Watertown	956
328–331	" "	957
331–334	" "	958
334	" "	959
334	Knowlton v. Watertown; Spalding v. Watertown	959
335–337	United States v. Averill	977
337–339	" "	978
339–341	" "	979
341	Brock v. Northwestern Fuel Co.	905
342–343	" " "	906

Off. Rep. 130 U. S.	Title.	Here in.
343–345	Gon-shay-ee, Petitioner	973
345–348	" "	974
348–351	" "	975
351–353	" "	976
353	Captain Jack, Petitioner	976
354	" "	977
354	Reynes v. Dumont; Dumont v. Fry	934
381–383	" "	941
383–386	" "	942
386–389	" "	943
389–392	" "	944
392–395	" "	945
395	" "	946
396	Gibbs v. Consolidated Gas Co.	979
403–404	" " "	982
404–407	" " "	983
407–410	" " "	984
410–412	" " "	985
412–413	Robertson v. Salomon	995
413–416	" "	996
416	Friedlander v. Texas & Pacific R. Co.	991
423–425	" " "	994
425–426	" " "	995
426	Shepherd v. Baltimore & Ohio R. R. Co.	970
430–431	" " "	971
431–434	" " "	972
434	" " "	973
435	Andes v. Slauson	989
438–439	" "	991
439	Badeau v. United States; United States v. Badeau	997
447–450	" "	1000
450–452	" "	1001
452	United States v. Cumming; Cumming v. United States	1029
453–454	" "	1030
454–455	" "	1031
456	Hurlbut v. Schillinger	1011
457–461	" "	1012
461–463	" "	1013
463–466	" "	1014
466–469	" "	1015
469–472	" "	1016
472	" "	1017
472	Wilson v. Edmonds	1025
474–475	" "	1026
475–478	" "	1027
478–480	" "	1028
480–482	" "	1029
482	Central Trust Co. v. Seasongood	985
491–492	" "	988
492–493	" "	989
493	Hassall v. Wilcox	1001
494–496	" "	1002
496–500	" "	1003
500–502	" "	1004
502–505	" "	1005
505	Kilbourn v. Sunderland; Sunderland v. Kilbourn	1005
513–514	" "	1008
514–517	" "	1009
517–520	" "	1010
520	Stillwell & Bierce Mfg. Co. v. Phelps	1066
526–527	" " " "	1067

Off. Rep. 120 U. S.	Title.	Here in.
527	Butler v. Boston & Savannah Steamship Co.	1017
528–530	" " "	1018
530–533	" " "	1019
533–536	" " "	1020
536–548	" " "	1021
549–552	" " "	1022
552–555	" " "	1023
555–558	" " "	1024
558	" " "	1025
559	Huling v. Kan. Valley Railway & Improvement Co.	1045
559–560	" " " "	1046
560–563	" " " "	1047
563–565	" " " "	1048
565–568	Union Trust Co. v. Southern Inland Nav. & Improvement Co.	1043
568–570	" " "	1044
570–572	" " "	1045
572–575	Synnott v. Shaughnessy	1038
575–578	" "	1039
578–580	" "	1040
581	Chinese Exclusion Case Chae Chan Ping v. United States	1068
581–582	" " "	1069
582–592	" " "	1070
592–595	" " "	1071
595–597	" " "	1072
597–600	" " "	1073
600–603	" " "	1074
603–606	" " "	1075
606–609	" " "	1076
609–611	" " "	1077
611	New York & Colorado Mining Syndicate and Co. v. Fraser	1081
619–621	" " " "	1034
621–623	" " " "	1035
623–624	Redfield v. Parks	1053
624–625	" "	1054

Off. Rep. 120 U. S.	Title.	Here in.
626–628	Peters v. Active Mfg. Co.	1057
628–629	" "	1058
630	McKinley v. Wheeler	1048
630–633	" "	1049
633–636	" "	1050
636–637	" "	1051
637	Picard v. East Tenn. Va. & Ga. R. R. Co.	1051
638–641	" " "	1052
641–642	" " "	1053
643	Andrus v. St Louis Smelting & Refining Co.	1054
646–648	" " "	1056
648–649	" " "	1057
649	Dunlap v. Northeastern R. R. Co.	1058
652–653	" " "	1059
653	" " "	1060
653–654	United States v. Haynes	1060
655	District of Columbia v. Cornell	1041
658–661	" "	1042
661	" "	1043
662	Lake County v. Rollins	1060
662–663	" "	1062
663–671	" "	1063
671–674	" "	1064
674	" "	1065
674–676	Lake County v. Graham	1065
676–679	" "	1066
679–682	" "	1067
682–684	" "	1068
684	Jones v. Van Doren	1077
690–691	" "	1079
691–693	" "	1080
693	Michigan Insurance Bank v. Eldred	1080
695–696	" " "	1081
696–699	" " "	1082
699	Hill v Harding	1083
702–704	" "	1084

THE DECISIONS

OF THE

Supreme Court of the United States,

AT

OCTOBER TERM, 1888.

[Authenticated copy of opinion record strictly followed, except as to such reference words and figures as are inclosed in brackets.]

[1] THE OREGON RAILWAY AND NAVIGATION COMPANY, *Plff. in Err.*,
v.
THE OREGONIAN RAILWAY COMPANY (Limited).

(See S. C. Reporter's ed. 1-39.)

Powers of corporations—railroad company, when cannot lease its road—power not presumed—articles of association—public grants—Oregon company—power to lease road—estoppel.

1. The powers of corporations are such, and such only, as are conferred on them by the Acts of the Legislature of the several States under which they are organized.
2. Unless specially authorized by its charter or by Act of the Legislature, a railroad company cannot, by lease or contract, turn over to another company, for a long time, its road and all its appurtenances, the use of its franchises and the exercise of its powers; nor can another railroad company, without similar authority, contract to receive and operate such road, franchises and property of such corporation.
3. Such a contract is not among the ordinary powers of a railroad company and is not to be presumed from the usual grant of powers in a railroad charter.
4. A corporation, formed under the Laws of Oregon, cannot assume to itself powers of action by the mere declaration in its articles of association that it possesses them.
5. In grants by the public, nothing passes by implication. In doubtful points the construction of the grant must be against the grantee.
6. The plaintiff, the Oregonian Railway Company (Limited), organized under the Laws of Great Britain, with such aid as the Statute of Oregon gives to it in reference to business done in that State, had no power to execute the lease of its railroad to the defendant company, mentioned in the opinion.
7. The Oregon Railway and Navigation Company, the defendant in this action, organized under the Laws of the State of Oregon, had not the legal capacity and lawful power to make said lease on its part.
8. A contract by which the plaintiff demised its road, privileges and franchises for ninety-six years to the defendant does not, by its performance for three years of the term, become so far an executed contract that a party thereto is estopped to deny its validity and to refuse to continue its performance.

[No. 26.]

Argued April 27, 30, and May 1, 1888. Decided March 5, 1889.

IN ERROR to the Circuit Court of the United States for the District of Oregon, to review a judgment, sustaining a demurrer to the answer and in favor of plaintiff for rent, on a contract for the lease of a railroad, owned by plaintiff, which had been leased to and used by defendant. *Reversed.*

Reported below, 23 Fed. Rep. 232.

The facts are stated in the opinion.

Messrs. **J. N. Dolph** and **James C. Carter**, for plaintiff in error:

The plaintiff was not authorized by its foreign charter or the Laws of Oregon to enter into the contract set up in the complaint.

Pa. R. Co. v. *St. Louis, A. & T. H. R. Co.* 118 U. S. 290 (30: 83); *Green Bay & M. R. Co.* v. *Union Steamboat Co.* 107 U. S. 98 (27: 413); *Thomas* v. *West Jersey R. Co.* 101 U. S. 71 (25: 950); *Pearce* v. *Madison & I. R. Co.* 62 U. S. 21 How. 441 (16: 184); *York & M. L. R. Co.* v. *Winans*, 58 U. S. 17 How. 30 (15: 27); *Lakin* v. *Willamette Valley & C. R. Co.* 13 Oreg. 436; *Davis* v. *Old Colony R. Co.* 131 Mass. 258; *Eastern Counties R. Co.* v. *Hawkes*, 5 H. L. Cas. 331, 371-381; *Ashbury R. C. & Iron Co.* v. *Riche*, L. R. 7 H. L. 653; *Macgregor* v. *Dover & D. R. Co.* 18 Q. B. 618; *East Anglian R. Co.* v. *Eastern Counties R. Co.* 11 C. B. 775; *Morgan* v. *La.* 93 U. S. 217 (23: 860).

The act of the Oregon Railway and Navigation Company, assuming to execute for that company the contract set up in the complaint, does not estop it from showing want of power in the lessor to execute said contract.

Re Comstock, 3 Sawy. 228; *Semple* v. *Bank of British Columbia*, 5 Sawy. 88; *Rochester Ins. Co.* v. *Martin*, 13 Minn. 59; Morawetz, Priv. Corp. §§ 86, 87; Wood's Field, Corp. § 235; Green's Brice, Ultra Vires, 42; *Marion Sav. Bank* v. *Dunkin*, 54 Ala. 478; *Lehman* v. *Warner*, 61 Ala. 467; *Darst* v. *Gale*, 83 Ill. 136; *Farmers & M. Bank* v. *Baldwin*, 23 Minn. 198.

The Oregon Railway and Navigation Company, by assuming to execute the contract set up in the complaint is not estopped to deny that the hiring of said railroad was not within the scope of its corporate powers.

Thomas v. *West Jersey R. Co.* 101 U. S. 71 (25: 950); *Ogdensburgh & L. C. R. Co.* v. *Vermont & C. R. Co.* 4 Hun, 712; *Middlesex R. Co.* v. *Boston & C. R. Co.* 115 Mass. 347; *Bradley* v. *Ballard*, 55 Ill. 417; Bigelow, Estop. 3d ed. 466; Wood's Field, Corp. § 386.

Messrs. Edmund Robertson, **George F.**

Edmunds and **A. H. Garland,** for defendant in error:

The defense of *ultra vires* is in this case an attempt to impeach collaterally the articles of the two corporations, and is, therefore, inadmissible.

Morawetz, Corp. § 148; *Dannebrogs Gold Q. Min. Co.* v. *Allment*, 26 Cal. 286; *Pac. Bank* v. *De Ro*, 37 Cal. 538; *St. Louis* v. *Shields*, 62 Mo. 247; *Cincinnati, La F. & C. R. Co.* v. *Danville & V. R. Co.* 75 Ill. 113; *Farnum* v. *Delaware & H. Canal Co.* 61 Pa. 265; *Grant* v. *Henry Clay Coal Co.* 80 Pa. 208; *Truckee & T. Turnp. Co.* v. *Campbell*, 44 Cal. 89; *Cole Silver Min. Co.* v. *Va. & G. H. Water Co.* 1 Sawy. 470; *Baker* v. *Backus*, 32 Ill. 79; *Hamilton* v. *Carthage*, 24 Ill. 22; *Mendota* v. *Thompson*, 20 Ill. 197.

A contract with a party as a corporation estops the party so contracting to deny the existence of the corporation.

Bigelow, Estop. 2d ed. 424; *Hubbard* v. *Chappel*, 14 Ind. 601; *Dutchess Cotton Manufactory* v. *Davis*, 14 Johns. 244; *Cowell* v. *Colorado Springs Co.* 100 U. S. 55 (25: 547); *St. Louis* v. *Shields*, 62 Mo. 251; *Evansville, I. & C. S. L. R. Co.* v. *Evansville*, 15 Ind. 416; *Heaston* v. *Cincinnati & Ft. W. R. Co.* 16 Ind. 275; *Brownlee* v. *Ohio, I. & I. R. Co.* 18 Ind. 70; *Smelser* v. *Wayne & U. S. L. Turnp. Co.* 82 Ind. 419; *Occidental Ins. Co.* v. *Ganzhorn*, 2 Mo. App. 205; *Douglas Co.* v. *Bolles*, 94 U. S. 104 (24:46); *M. E. U. Church* v. *Pickett*, 19 N. Y. 485; *Swartwout* v. *Michigan A. L. R. Co.* 24 Mich. 396; *Kennedy* v. *Cotton*, 28 Barb. 59; *Phenix Bank* v. *Donnell*, 41 Barb. 572; *Jones* v. *Bank of Tenn.* 8 B. Mon. 123.

Admissions of the plaintiff's corporate character contained in the defendant's first two answers bind the defendant.

Carradine v. *Carradine*, 33 Miss, 698; *Elwood* v. *Lannon*, 27 Md. 200; *Peckham Iron Co.* v. *Harper*, 41 Ohio St. 100.

Mr. Justice **Miller** delivered the opinion of
[2] the court:

This is a writ of error to the Circuit Court of the United States for the District of Oregon.

The Oregonian Railway Company (Limited) recovered a judgment against the Oregon Railway and Navigation Company for the sum of $68,131, on a contract for the lease of a railroad owned by the plaintiff in the suit, which had been leased to and used by the defendant. This sum was for the semi-annual payment of rent, in advance, for the half year beginning May 15, 1884.

The Oregonian Railway Company (Limited) was organized in Scotland, under what are
[3] called "The Companies' Acts," of Parliament of 1862, 1867, and 1877, and in the memorandum of association it is declared that its principal office and place of business is at Dundee. The defendant in the action, the Oregon Railway and Navigation Company, was organized under articles of incorporation, filed June 13, 1879, according to the Statutes of Oregon on that subject, and its principal office is declared in those articles to be at Portland, Oregon.

After many amendments to the original petition and still more numerous amended answers, the case came to a hearing before the court on a demurrer to the answer and a motion to strike it out. This motion was denied, but the demurrer was sustained; and as the pleadings were supposed to present all the issues that could arise in the case a judgment was rendered for the plaintiff, to review which this writ of error is prosecuted. 22 Fed. Rep. 245, and 23 Fed. Rep. 232.

The amended petition of the plaintiff sets out the Acts of Parliament under which it was organized as a corporation, or so much thereof as is necessary to an understanding of the questions presented by this record, and gives in full its "Memorandum of Association," and also what are called its "Articles of Association." This memorandum, after stating the name of the company as above given, and that its registered office will be situated in Scotland, proceeds to give the objects for which it is established, as follows:

"*First.* The building, constructing, reconstructing, equipping, owning, operating, leasing or selling, transferring or disposing of, or purchasing or otherwise acquiring, holding, and operating, or otherwise using, working or dealing in all or any such railway or railways, railroad or railroads, in the State of Oregon and the Territory of Washington, in the United States of America, or in either of them, or between such points in said State or Territory or elsewhere in North America as may from time to time be resolved or determined upon by said company, and the carrying of passengers, goods, and minerals and all other traffic and freight on, and the doing and performing of all other acts, deeds and other operations connected with, railways and railroads in the said State and Territory, or either of them, or elsewhere in North America.

"*Second.* The building, constructing, equipping, owning, and operating, or the leasing, selling, transferring, holding, or acquiring, by purchase or otherwise, and the working and using of one or more lines or portions of lines of railroad or railway, or parts thereof from (first) the City of Portland or the City of Astoria, in the State of Oregon, United States of America, or from either or both of said cities, or from some other point or place on the Willamette or Columbia Rivers, in said State of Oregon, through any part or portion of the said State of Oregon lying west or south of the Cascade range of mountains, in said State, to some point at or near, in or upon said Cascade range of mountains; (second) from thence, or from any part or portion of the western or southwestern part of said State of Oregon, to and across and to the east side of said Cascade range of mountains, through a pass in said mountains at or near that fork or branch of the Willamette River, in said State of Oregon, known as the middle fork or branch of said river, or through some other pass in said mountains, within one hundred miles north or south of said middle fork or branch of said river, where shall be found to be on actual survey the easiest and most practicable route across the Cascade range of mountains; (third) thence through that portion of said State of Oregon lying east of said Cascade range of mountains and on through the Territories of Washington or Idaho, or the States of Nevada and California, in the United States of America, or through all or any one or

more of said States and Territories to a connection with, or without making any connection with, any other railway or railways in either of said States of Oregon, California, or Nevada, or Territories of Washington or Idaho, and with or without one or more branch lines (*a*) running north, south, east, or west from said main line on the east side of said Cascade range of mountains, or (*b*) running from said main line on the west side of said Cascade range, in said State of Oregon, forming a junction, or one or more junctions, with said main line, at one or more points, to a terminus in said portion of the State of Oregon west of said Cascade range of mountains, or to a junction with said main line, or to a terminus or termini at one or more seaports on the shores of the Pacific Ocean, all as may from time to time be determined by actual surveys; as also to purchase, build, construct, own, equip and operate, or to enter into agreements to run over or to lease (1) any line or lines, branch or branches, of railway or railways, railroad or railroads, that may connect with or become attached to, or meet or become a part of the said main line or its main branch or any of its branches hereinbefore designated; or (2) such other main or branch line or lines, or extensions of any railway or railways, railroad or railroads, made in connection with this company's main line, or of any of its branches, or separate and distinct therefrom, all in such manner of way or form and on such terms as said company shall from time to time deem advisable and for its interests, and the doing and performing of all other operations connected with said designated railway or railways, railroad or railroads, or branches thereof, or in connection with other railways of a similar or different nature, the doing and performing of which this said company shall at any time deem advisable and for its interests in the carrying out of its business.

"*Third.* The building, constructing, purchasing, or otherwise acquiring, holding, equipping, owning and operating, or the leasing and operating, or the leasing, equipping, and operating, or the selling, transferring, or otherwise disposing of, and the working and using of any other railway or railroad, or of any wharves, jetties, steamboat, or steamship, stage, or of any canals, locks, bridge, clay road, plank road, turnpike, hack, truck, or express lines, or any other line, lines, or means for the transportation of freight or passengers, or either or both, now constructed or operated in whole or in part, or which may hereafter be constructed or operated in whole or in part, in either of the said States of Oregon, California, or Nevada, or said Territories of Washington or Idaho, and that whether in connection with or separate and distinct from, and as line or means independent of said railway or railways, railroad or railroads, so to be built, constructed, purchased, owned, equipped, or operated as aforesaid by this company."

The petition also avers that the company has complied with the Statute of Oregon, which authorizes corporations of foreign countries to do business in that State upon complying with certain requirements. On this averment no issue is raised.

It also alleges that on August 1, 1881, the plaintiff, by an indenture of lease, demised to the defendant a certain railway or railroad owned by the plaintiff, in the State of Oregon, with its stations, depots, and other property connected therewith, for a term of ninety-six years from the date of the lease; and that the defendant, by the terms of said indenture, covenanted and agreed to pay the plaintiff therefor the yearly rental of twenty-eight thousand pounds sterling, in equal half-yearly payments, on the 15th of May and the 11th of November in each year in advance. It then proceeds to allege "that upon the execution of said indenture of lease, the said defendant entered into possession of said demised property, and has continued in the enjoyment of the same to the present time, but that on the 15th of May, 1884, the defendant, pretending that neither it nor the plaintiff was authorized or empowered by law to enter into said indenture of lease, tendered and offered to restore possession of said demised property to plaintiff in its then condition," and, disavowing the obligation of the lease, refused to pay any further rent; wherefore the plaintiff prays judgment for the sum of $68,131.

The substance of the numerous answers and amended answers is, that the defendant denies that the plaintiff has any corporate existence; avers that it had no power or authority to make the contract or lease as stated in the petition, and that the contract, although signed by the president of the defendant company, with the seal of that company attached, and the signature of the secretary, by order of its board of directors, is also without legal authority, and is not binding upon the defendant. In fact, the essence of the defense and of the whole controversy is, whether these companies had power under their organization as corporations to make the contract of lease which is the foundation of this action.

The defendant avers that it has fully paid [7] the rent due under the lease for the term ending May 15, 1881, from which time it disavowed [8] the obligatory force of the contract, and offered to return and deliver up to the plaintiff all the property it held under the lease.

It appears also by the pleadings, both on the [9] part of the plaintiff and defendant, that they entered into an agreement, by which the de- [10] fendant company was to continue to use the road for the time being, in order to prevent serious [11] loss arising from the disruption of the relations of the two railroads, but that such use was not to be construed as being under the lease, nor as binding either party beyond what the law [12] would imply if this arrangement had not been made. There is also an averment in the petition [13] that the property was not in the same condition when the offer to return it was made as it was when it was received; but this is denied in the [14] answer, and as no proof was taken in regard to that fact it can make no figure in the case as presented to this court.

The two questions presented on this demurrer, and the only ones necessary to be considered, are:

First. Whether the plaintiff, the Oregonian Railway Company (Limited), organized under the Laws of Great Britain, with such aid as the [20] Statute of Oregon gives to it in reference to business done in that State, had the power to lease its railroad to the defendant company; and,

Second. Whether the Oregon Railway and Navigation Company, the defendant in the action, organized under the Laws of the State of Oregon, had the legal capacity and lawful power to make said lease on its part.

Although the lease itself, which is the foundation of this action, is not found in the pleadings, nor in the record, the statements in regard to it made by the petition, amended petition, and answers leave no question as to its nature or character so far as it affects the two questions here suggested.

It may be considered as the established doctrine of this court in regard to the powers of corporations, that they are such and such only as are conferred upon them by the Acts of the Legislatures of the several States under which they are organized. A corporation in this country, whatever it may have been in England at a time when the Crown exercised the right of creating such bodies, can only have an existence under the express law of the State or Sovereignty by which it is created. And these powers, where they do not relate to municipal corporations exercising authority conferred solely for the benefit of the public, and in some sense parts of the body politic of the State, have in this country until within recent years always been conferred by special Acts of the legislative body under which they claim to exist. But the rapid growth of corporations, which have come to take a part in all or nearly all of the business operations of the country, and especially in enterprises requiring large aggregations of capital and individual energy, as well as their success in meeting the needs of a vast number of most important commercial relations, have demanded the serious attention and consideration of law makers. And while valuable services have been rendered to the public by this class of organizations, which have stimulated their formation by numerous special Acts, it came at last to be perceived that they were attended by many evils in their operation as well as much good, and that the hasty manner in which they were created by the Legislatures, sometimes [21] with exclusive privileges, often without due consideration and under the influence of improper motives, frequently led to bad results.

Whether it was this consideration, or mainly the desire to fix some more uniform rule by which the rights and powers of private corporations, or those for pecuniary profit, should come into existence, it is certain that not many years ago State Constitutions which were formed or remodeled came to have in them a provision like that which is now to be found in the Constitution of the State of Oregon, art. XI, § 2:

"Corporations may be formed under general laws, but shall not be created by special laws, except for municipal purposes. All laws passed pursuant to this section may be altered, amended, or repealed, but not so as to impair or destroy any vested corporate rights."

Outside of the powers conferred and the privileges granted to these organizations by the statutes under which they exist, they are in all the States of the Union which, like Oregon, have the common law as the foundation of their jurisprudence, governed by that common law; and it is the established doctrine of this court, and, with some exceptions, of the States in which that common law prevails, as well as of Great Britain, from which it is derived, that such a corporation can exercise no power or authority which is not granted to it by the charter under which it exists, or by some other Act of the Legislature which granted that charter.

This proposition has been before this court more than once in recent years. It was very fully considered in *Thomas* v. *West Jersey Railroad Company*, 101 U. S. 71 [25:950], which resembled the case before us in several important features.

The Millville and Glassboro Railroad Company, incorporated under the Laws of New Jersey, entered into an agreement with Thomas and others for the lease of its railroad for twenty years. It was agreed that the company might at any time terminate the lease and retake possession of the railroad; in which case any loss or damage incurred by the lessees should be equitably adjusted by arbitration, and the amount be paid by the company. This contract was made in 1859, and the lessees took [22] control of the property and used it until 1867, when they were served with a notice by the lessor terminating the lease. A suit was brought to recover the damages mentioned in the contract, which came from the Circuit Court of the United States for the Eastern District of Pennsylvania to this court, where it was very elaborately argued, and received the earnest consideration of the court, as may be perceived from the report of the case. The opinion, which was concurred in by all the judges who sat in the case, contains a full review of the decisions of the English courts on the subject discussed, and also of previous decisions of this court.

The question turned altogether upon the power of the railroad company, under its charter and the Laws of New Jersey, to make the lease by which its road was turned over for twenty years to the absolute control of other parties. The right to do this was asserted under the following language in the charter of the company:

"That it shall be lawful for the said company, at any time during the continuance of its charter, to make contracts and engagements with any other corporation, or with individuals, for the transporting or conveying any kinds of goods, produce, merchandise, freight, or passengers, and to enforce the fulfillment of such contracts."

But the court said that it was impossible under any sound rule of construction to find in this language a permission to sell, lease, or transfer to others the entire railroad and the rights and franchises of the corporation.

The cases of *Ashbury Railway Carriage & Iron Company* v. *Riche*, L. R. 7 H. L. 653, decided in the House of Lords in 1875, and *East Anglian Railway Co.* v. *Eastern Counties Railway Company*, 11 C. B. 775, were also reviewed, with several others of a similar character from the reports of the highest courts of England, in which, as this court said—

"The broad doctrine was established that a contract not within the scope of the powers conferred on the corporation cannot be made

valid by the assent of every one of the shareholders, nor can it by any partial performance become the foundation of a right of action."

[23] Reference was also made in the same opinion to the case of *York & Maryland Line Railroad Company* v. *Winans*, 58 U. S. 17 How. 30 [15: 27], which held that a corporation which has undertaken to construct and operate a railroad cannot, by alienating its right to use and its powers of control and supervision, avoid the responsibility that it assumed in accepting the charter. The court said: "The corporation cannot absolve itself from the performance of its obligations without the consent of the Legislature." To this effect were cited *Beman* v. *Rufford*, 1 Sim. N. S. 550, and *Winch* v. *Birkenhead, L. & C. J. R. Co.* 13 Eng. L. & Eq. 506.

Afterwards, in *Green Bay & M. R. Co.* v. *Union Steamboat Co.* 107 U. S. 98 [27: 413], the case of *Thomas* v. *West Jersey R. Co. supra*, was referred to with approbation.

Still later, in the case of *Pa. R. Co.* v. *St. Louis, A. & T. H. R. Co.* 118 U. S. 290, 309 [30: 83, 92], where the whole question was reconsidered after a full argument, the conclusion was stated in the following language:

"We think it may be stated, as the just result of these cases and on sound principle, that unless specially authorized by its charter, or aided by some other legislative action, a railroad company cannot, by lease or any other contract turn over to another company, for a long period of time, its road and all its appurtenances, the use of its franchises, and the exercise of its powers; nor can any other railroad company without similar authority make a contract to receive and operate such road, franchises, and property of the first corporation, and that such a contract is not among the ordinary powers of a railroad company, and is not to be presumed from the usual grant of powers in a railroad charter."

It may be considered that this is the Law of the State of Oregon, except as it has been altered or modified by its Constitution and statutes.

We are here met with an embarrassment arising out of the circumstance that neither the plaintiff nor the defendant in the present case professes to exercise its powers under any special charter conferred on it by the Legislature of Oregon. That State, in accordance with the principle laid down in its Constitution, to which we have already referred, passed [24] general laws for the formation of private corporations. See Laws of Oregon (Deady's Comp.), chap. VIII. Under title I, section 1 reads as follows:

"Whenever three or more persons shall desire to incorporate themselves for the purpose of engaging in any lawful enterprise, business, pursuit, or occupation, they may do so in the manner provided in this Act."

Provision is then made for the manner in which these persons shall constitute themselves a corporation, by filing articles of association, acknowledged before a proper officer, in the office of the Secretary of State and in that of the clerk of the county where the business is to be carried on. What these articles shall contain is specified with some particularity. But title II of this same chapter is more important in regard to the matter at issue, because it relates, among other things, to corporations which are organized for the construction of railroads. The mode of their formation is the same as that of those coming under title I, but the declaration of the powers which may be exercised by railroad corporations may become important in the consideration of the present case.

By the Act of the Legislature of October 21, 1878, Session Laws, 95, it is provided "that any foreign corporation incorporated for the purpose of constructing and operating, or for the purpose of, or with the power of, acquiring and operating any railway, . . . shall, on compliance with the laws of this State for the regulation of foreign corporations transacting business therein, have the same rights, powers and privileges" as a domestic corporation formed for such purpose, and no more.

When we have found, therefore, what powers were conferred by the Laws of Oregon on the defendant corporation in this case we shall also have determined that the powers of the plaintiff corporation were no greater with regard to the same subject matter, so far as the statutes are concerned, except as it may be shown that other powers are given by some express statute.

It may also be conceded, at the outset of the argument, that the memorandum made under the Companies' Act of 1862 by the plaintiff, [25] and the articles of association made under the Laws of Oregon by the defendant, both contain declarations of the powers of these companies and of each of them to buy or sell or lease railroads. The only question, therefore, to be considered is whether this declaration of power is authorized by the Laws of Oregon.

It is argued that the articles of association, under the Oregon Law, and the memorandum of association, under the Companies' Act of Great Britain, are themselves the equivalent of an Act of incorporation by the Legislature, and that whatever is found as a grant of power, or description of the purpose of the company, set forth in such articles or memorandum, is tantamount to a legislative Act. A phrase in the opinion of the court in *Thomas* v. *West Jersey Railroad Co. supra*, is cited as supporting this proposition, namely: "The memorandum of association, as *Lord* Cairns said stands in place of a legislative charter." But what was meant, both by *Lord* Cairns and by this court, was that anything not claimed, granted or described in such instrument in relation to the powers and business of the corporation could not be held to be a part of them by construction; in other words, that its powers could not exceed those enumerated therein. It was necessarily implied in such a remark that anything in such articles or memorandum not warranted by the statutes in question, authorizing the formation of corporate bodies, was void for want of authority.

Of course any authority for the exercise of corporate powers, derived from the Laws of Oregon, must be in accord with the Constitution of that State and its statutes upon that subject. The constitutional provision, above quoted, that corporations shall not be created by special laws, but may be formed under gen-

eral laws, implies that no private corporation could be created thereafter until such general law had been enacted, and that it thereupon became the fundamental law of the State in regard to all corporations formed under it. It is idle to say, therefore, that any corporation could assume to itself powers of action by the mere declaration in its articles or memorandum that it possessed them.

We have examined with much care the two [26] statutes already referred to concerning incorporations, enacted in accordance with that constitutional provision, and do not find any express authority for a railroad company to lease its road for an indefinite period, or for it to take such a lease; nor are we able to find any general language in those statutes, or either of them, in relation to the powers that may be conferred upon corporations, which justifies a departure from the principles laid down in *Thomas* v. *Railroad Company*.

It is to be remembered that where a statute making a grant of property, or of powers, or of franchises, to a private individual or a private corporation, becomes the subject of construction as regards the extent of the grant, the universal rule is that in doubtful points the construction shall be against the grantee and in favor of the Government or the general public. As was said in the case of *Charles River Bridge* v. *Warren Bridge*, 36 U. S. 11 Pet. 420 [9:773]: "In this court the principle is recognized that in grants by the public nothing passes by implication." See also *Dubuque & P. R. Co.* v. *Litchfield*, 64 U. S. 23 How. 66 [16:500]; *St. Clair Co. Turnpike Co.* v. *Ill.* 96 U. S. 63 [24:651].

Therefore, if the articles of association of these two corporations, instead of being the mere adoption by the corporators themselves of the declaration of their own purposes and powers, had been an Act of the Legislature of Oregon conferring such powers on the corporations, they would be subject to the rule above stated and to rigid construction in regard to the powers granted. How much more, then, should this rule be applied, and with how much more reason should a court called upon to determine the powers granted by these articles of association construe them rigidly, with the stronger leaning in doubtful cases in favor of the public and against the private corporation.

We have to consider, when such articles become the subject of construction, that they are in a sense *ex parte;* their formation and execution—what shall be put into them as well as what shall be left out, do not take place under the supervision of any official authority whatever. They are the production of private citizens, gotten up in the interest of the parties who propose to become corporators, and stim- [27] ulated by their zeal for the personal advantage of the parties concerned rather than the general good.

These articles, when signed by the corporators, acknowledged before any justice of the peace or notary public, and filed in the office of the Secretary of State and the clerk of the proper county, become complete and operative. They are, so far as framed in accordance with law, a substitute for legislation put in the place of the will of the people of the State, formerly expressed by Acts of the Legislature. Neither the officer who takes such acknowledgment, nor those who file the articles, have any power of criticism or rejection. The duty of the first is to certify to the fact, and of the second to simply mark them filed as public documents, in their respective offices.

These articles, which necessarily assume by the sole action of the corporators enormous powers, many of which have been heretofore considered of a public character, sometimes affecting the interests of the public very largely and very seriously, do not commend themselves to the judicial mind as a class of instruments requiring or justifying any very liberal construction. Where the question is whether they conform to the authority given by statute in regard to corporate organizations, it is always to be determined upon just construction of the powers granted therein, with a due regard for all the other laws of the State upon that subject, and the rule stated above.

It is not urged with much apparent confidence that there is anything in the general provisions of the Laws of Oregon, in relation to the formation of private corporations, which are to be found in chapter VIII, titles 1 and 2, Deady's Comp., which by express terms authorizes a corporation to include within the powers enumerated in its articles of association that of making such a lease as the one which is the subject of this action. Arguments based upon these laws are founded upon the implication that building railroads is, within the meaning of section 1 of title I, a "lawful enterprise, business, pursuit or occupation;" and the further inference that the power of leasing a railroad, either as a lessor or a lessee, is one which is incident and proper to the pur- [28] suit of the lawful business of constructing and operating a railroad. The same argument is drawn from the general fact that title II recognizes the authority of corporations organized for the construction of railroads, macadamized roads, plank roads, clay roads, canals, or bridges, to appropriate lands for their necessary uses by the exercise of the right of eminent domain in the manner pointed out.

The language of the Statute of New Jersey (quoted in *Thomas* v. *West Jersey R. Co.*, *supra*), under which it was urged that the railroad company had authority to make the lease in controversy, was quite as general and as liberal in its description of the powers which that corporation was authorized to exercise as anything to be found in the Oregon statutes. In fact, in the authority which was given to that company in regard to making contracts for the transportation of passengers and freight, and the doing of a general railroad business with other corporations and private persons, it approaches nearer the power to make leases than anything which is to be found in the laws of Oregon; yet this court held that although it was a direct authority from the Legislature itself, and not subject to the restrictive criticisms above suggested, the lease made in that case was *ultra vires*, and without authority on the part of the company.

Another important consideration to be observed, peculiarly applicable to the acts of corporations formed by the corporators themselves, declaring what business they are about to pur-

sue, and the powers which they purpose to exercise in carrying it on, is that while the thing to be done may be lawful in a general way, there are and must be limitations upon the means by which it is to be done or the purpose carried out, which the articles of incorporation cannot remove or violate. A company might be authorized by its articles to establish a large manufactory in a particular locality, and might be held to be a valid incorporation with sufficient powers to prosecute the business described; but such articles, although mentioning the particular place, would not empower the company, in the exercise of the power thus conferred, to carry on a business injurious to the health or comfort of those living in that vicinity.

[29] Instances might be multiplied in which powers described in general terms as belonging to the objects of the parties who thus become incorporated would be valid; but the corporation, in carrying out this general purpose, would not be authorized to exercise the powers necessary for so doing in any mode which the law of the State would not justify in any private person or any unincorporated body. The manner in which these powers shall be exercised, and their subjection to the restraint of the general laws of the State and its general principles of public policy, are not in any sense enlarged by inserting in the articles of association the authority to depart therefrom.

In the absence of anything in the general incorporation Act, we are referred to several statutes of the State of Oregon, which, while not specifically granting to railroad companies the right to lease their property or to take other railroads under lease from their owners, are supposed by implication to recognize such right in all railroad companies. We are furnished with a list of statutes of that State in which the word "assigns" is used in regard to corporations, generally in the phrase "successors or assigns," from which it is sought to imply the general proposition that a corporation may assign all its property. A special reference is made to the Act of October 22, 1880, by which the Legislature granted to the "Oregonian Railway Company (Limited), the right of way and station grounds over the state lands, and terminal facilities upon the public grounds at the City of Portland."

The preamble to this statute is quite lengthy, and, taken in connection with the enacting clause, shows very plainly that the principal object aimed at was to give to that company, so far as the Legislature could do so, certain rights, privileges, and easements upon the public grounds, streets, and levee in that city, on and near the banks of the Willamette River, for its depots and wharves and the operations of its railroad. After these are fully specified, a proviso is added, "That the said Oregonian Railway Company (Limited), or its assigns, shall have no power to sell, convey or assign the premises or rights *hereby granted*, or any [30] part or parcel thereof, to any person, persons, firm, or corporation, save only with and as part and parcel of and as appurtenant to the railway now built and owned by said company and now in process of construction by it."

It is strenuously argued, and with some degree of plausibility, that the language of this proviso, and the use of the words "successors" and "assigns" in other statutes, which are referred to, imply that by the law of Oregon railroad companies may make, and must be supposed to be capable of making, assignments. But whatever may have been the intent in the minds of the legislators in using these words, it is not precisely the form in which we would expect to find a grant of the power to sell, to lease, or to transfer the title, ownership, or use of railroad lines, the property belonging thereto, and the franchises necessary to carry them on, by one corporation to another.

One of the most important powers with which a corporation can be invested is the right to sell out its whole property, together with the franchises under which it is operated, or the authority to lease its property for a long term of years. In the case of a railroad company these privileges, next to the right to build and operate its railroad, would be the most important which could be given it, and this idea would impress itself upon the Legislature. Naturally, we would look for the authority to do these things in some express provision of law. We would suppose that if the Legislature saw fit to confer such rights it would do so in terms which could not be misunderstood. To infer, on the contrary, that it either intended to confer them or to recognize that they already existed, by the simple use of the word "assigns," a very loose and indefinite term, is a stretch of the power of the court in making implications which we do not feel to be justified.

The legislators who enacted these statutes may have had an idea that there were certain things which corporations could assign; they may have used the expressions to which we have referred in a very loose instead of a technical sense; or they may have supposed that cases might arise where railroad property going by some operation of law, as bankruptcy or foreclosure, from the hands of its original own- [31] ers into the possession of other persons, would justify the description of the latter by the words "successors or assigns." In using these terms they may have thought that authority might be given by future statutes, either generally to all corporations or to some special organization, to sell or transfer the corporate property or some part of it. But, whatever may have been their purpose, we think the argument is a forced one, which would vest in railroad companies the general power to sell or lease their property or franchises, or to make contracts to buy or take leases of the same from other railroad corporations, from the use which is made of these indefinite terms "successors or assigns."

This question came up in *Thomas* v. *West Jersey Railroad Company*, *supra*, in which, as already stated, a lease by the railroad company of its road and corporate franchises was held to be void. While the lease was in full operation, an Act was passed by the Legislature of New Jersey declaring it unlawful for the directors, lessees, or agents of that railroad company to charge more than 3½ cents per mile for the carrying of passengers. It was insisted that this use of the word "lessees" applied to the then existing lessees of that road, and operated as a ratification by the State Legislature of the lease under which they held it. In discussing this subject the court said:

"It may be fairly inferred that the Legislature knew at the time the statute was passed that the lessees were running the road, and claiming to do so as lessees of the corporation. It was not important for the purpose of the Act to decide whether this was done under a lawful contract or not. No inquiry was probably made as to the terms of that lease, as no information on that subject was needed. The Legislature was determined that whoever did run the road and exercise the franchises conferred on the company, and under whatever claim of right this was done, should be bound by the rates of fare established by the Act. Hence, without undertaking to decide in whom was the right to the control of the road, language was used which included the directors, lessees, [32] and agents of the railroad. The mention of the lessees no more implies a ratification of the contract of lease than the word 'directors' would imply a disapproval of the contract. It is not by such an incidental use of the word 'lessees,' in an effort to make sure that all who collected fares should be bound by the law, that a contract unauthorized by the charter, and forbidden by public policy, is to be made valid and ratified by the State." p. 85 [953].

This language applies with great force to the attempt which is made in this case to deduce from the use of the word "assign" in the Act of October 22, 1880, a recognition of the power of the railroad company to sell or assign its entire property and rights. The object of the Legislature in making the proviso to that statute was to make sure that the grant given to the Oregonian Company of terminal facilities, as they are called, with the right to wharves, depots, and access to the river for the use of the road, should never be separated by sale, assignment, or otherwise from the road itself, and that into whosesoever hands the road went should also go the rights, powers and privileges conveyed by the grant. Without these prohibitory words it is possible the company might have had power to sell or assign the depot or wharves granted, while without the authority to do either in regard to the rights or franchises of which they were already possessed. Hence, they used a term which they supposed in a general way might cover any transfer of the ownership by the railroad company of the grants made to it by the statute, whether by operation of law or otherwise. If the property should be sold out under a mortgage or deed of trust, or any other instrument which the company might possibly have had the power to make to purchasers who might be called "assigns" under such proceedings, there should also go with it the grant made by the statute.

The language used in the statute in question in this case is stronger than that in other cases cited to us by counsel, and we are of opinion that they do not, any of them, nor do they collectively, establish the proposition, that by the Laws of Oregon a railroad company could sell or lease its entire property, franchises and [33] powers to another company, or take a grant or lease of similar property or franchises from any other person or company.

The attempt is made to sustain the proposition here contended for in regard to the power to lease, by another inferential process of reasoning which we think equally untenable.

The following provision is found in chapter VIII, title I:

"Sec. 20. Any corporation formed for the purpose of navigating any stream or other water may, by virtue of such incorporation, construct any railroad, macadamized road, plank road, or clay road, or canal or bridge, necessary and convenient for the purpose of transporting freight or passengers across any portages on the line of such navigation, occasioned by any rapids or other obstructions to the navigation of such stream or other water, in like manner and with like effect as if such corporation had been specially formed for such purpose; but no corporation formed under this Act or heretofore or hereafter incorporated by any special Act of incorporation, passed by the Legislative Assembly of this State or otherwise, for the purpose of navigating any stream or other water in this State, or forming the boundary thereof in whole or in part, nor any stockholder in such corporation, shall ever take or hold stock, or any interest directly or indirectly in the stock of any corporation which may be formed under this Act, for the purpose of building or constructing any road in this Act mentioned; nor shall any such corporation ever purchase, lease, or in any way control such road or the corporate rights of such last named corporation."

It is argued that this prohibition against leasing the railroad is a recognition of the fact that such a power would have existed if it had not been forbidden by this statute; but as the language of the whole section relates to the competition which may exist or arise between corporations organized for the purpose of navigating streams or other waters, when they may find it convenient to construct a road across such portages on the line of their navigation as may be required to carry over goods and property from one navigable water to another, we do not see that it has any effect in establishing such a general principle.

From the simple fact that in the revision of [34] this law all reference to leases was omitted, it is argued that the general power of leasing one road by another wherever situated, without reference to its competition with roads owned by navigation companies, amounts to a restoration of the power to lease or accept leases on the part of any railroad company in the State, of all its road, of all its franchises, of all its property, for an indefinite length of time.

As to this we can only say that the original section, relating solely to a peculiar class of objects, namely, the construction of roads across portages by corporations navigating the waters of the State, and forbidding by its last clause the purchase, lease or control of such portage road or the corporate rights acquired by them, was necessarily limited to that class of roads, and the repeal or modification of so much of the section as related to the power to lease could have no effect to declare that all railroads in the State of Oregon had the power to make contracts of lease, either as lessors or lessees.

One other provision of the laws of Oregon, immediately preceding the section just dis-

cussed, is also relied upon as establishing the right of a corporation to sell all of its property, and therefore its right to the smaller or subsidiary power of leasing it. It is found under chapter VIII, title I, as follows:

"Sec. 19. Any corporation organized under the provisions of this Act may, at any meeting of the stockholders which is called for such purpose, by a vote of the majority of the stock of such corporation, increase or diminish its capital stock or the amount of the shares thereof, or authorize the dissolution of such corporation and the settling of its business and disposing of its property and dividing its capital stock: *Provided, however*, That the capital stock of any corporation formed under this Act, except corporations formed for the purpose of making and constructing a railroad, shall never exceed the sum of two million of dollars, and any corporation that shall violate this provision of this Act shall forfeit its corporate rights."

It is argued that, because a corporation has authority to put an end to its existence by a [35] vote of the majority of its stockholders, in which event it may proceed to settle up its affairs, *dispose of its property*, and divide its capital stock, therefore, a corporation in full operation, with no such purpose of terminating its existence, may, in the ordinary course of its business, sell all of its property, real and personal and, if it be a railroad company, dispose of its road, its franchises, and the powers necessary to properly carry on the business of a carrier. It is insisted that if it can do this, it may therefore make a lease of such property and franchises, transferring all those powers, rights and privileges.

But it does not need argument to show that such provision, made for the dissolution of a corporation by the voluntary act of its incorporators, providing for the disposition of its property when the resolution to that effect has been adopted, whether by distribution of dividends on its profits or the sale of shares of stock, or for any other disposition of its effects compatible with law, is not applicable to and cannot be intended to confer upon corporations continuing in existence, or which, like these companies, contemplate in the very contract entered into a continuance of more than ninety-six years the power to dispose of their corporate powers and franchises, much less the authority to lease them for an indefinite period to others.

In the case before us both corporations continued to exist; they both entered into contracts covering a period of ninety-six years; and if the contract of lease be valid, one of them obtained thereby the right to the control and use of the property and franchises of the other, which on its part became bound for the payment of rent therefor, a supposed profit on the capital, for the entire period of the term. We can see no reason why the powers conferred upon a corporation going out of existence, and disolved by its own act, including the right to wind up its affairs and dispose of its property, can be held to confer any such power on a company which contemplates an existence of a hundred years to come.

Nor does there appear to be any force in the objection that if an Oregon corporation cannot acquire the right to take a lease of a railroad under the existing general laws, it cannot acquire it at all, the Legislature being prohibited [36] by the Constitution from granting special charters of incorporation, and therefore, it is said, it has no authority to grant special privileges to a particular corporation—a proposition we are not prepared to concede to its fullest extent. But assuming, without deciding, that it is true that the Legislature cannot grant the right to a particular railroad company to make or to take a lease of the railroad of another company, it would be clearly within its power to confer by general laws on all railroad corporations within the State the powers to make and to take leases, which powers are claimed by the plaintiff to exist under the general law of Oregon as it now stands.

The reasons for holding that the Oregonian Company had no power to make a lease of its railroad are even stronger than those for holding that the Oregon Railway and Navigation Company had no power to take the lease.

In the first place, even if a domestic railroad corporation established under the general laws of Oregon could be construed as entitled to assume by its articles the power of taking leases of other railroads as incident to and in connection with operating its own road, it would by no means follow that such a corporation could assume the power of leasing its whole railroad for a term of years to another corporation, and thereby substantially abandon and transfer its whole corporate rights and franchises.

The Oregonian Company is a foreign corporation, and the general laws of Oregon do not give a foreign corporation the right to lease, but only to construct or acquire and operate a railroad within the State. The only statute relied on as giving the power to lease (except those already considered) is the General Law of Oregon of 1878, Laws of Oregon, p. 95, which clearly does not include or touch that power. The first section, while it includes, among the classes of foreign corporations therein particularly enumerated, "any foreign incorporation incorporated for the purpose of constructing, or constructing and operating, or for the purpose of or with the power of acquiring and operating, any railway," significantly omits corporations established for the purpose of selling or leasing their roads, instead of operating them them- [37] selves; and this section gives to those classes of foreign corporations therein enumerated only "the same rights, powers and privileges in the exercise of the rights of eminent domain, collection of tolls, and other prerogative franchises as are given by the laws of this State to corporations organized within this State, for the purpose of constructing any railway," or for one of the other purposes already specified, of which the making of leases is not one. And the second section, merely providing that nothing in the Act contained shall be so construed as to give to foreign corporations any other or further rights than may be acquired or exercised by domestic corporations, but only to give them the same as domestic corporations may acquire or exercise, is evidently limited to the classes, both of foreign and domestic corporations, specified in the first section.

Under this statute, in short, foreign coporations created for the purpose of leasing get no

power at all, and no foreign corporation gets any power to sell or lease its road.

Another argument relied upon by counsel for the defendant in error is that, within the principles laid down in certain cases on the subject, the contract here is so far an executed one that the plaintiff in error is estopped to deny its validity and to refuse to continue its performance. As already stated, the contract was one by which the plaintiff demised its road, privileges and franchises, for a period of ninety-six years, from the first of August, 1881, to the defendant who took possession of it, and used and occupied it, under the lease, until the 15th day of May, 1884, a period of less than three years. It then did what was equivalent to returning the property to the plaintiff, and refused to be further bound by the contract.

To say that a contract which runs for ninety-six years, and which requires of both parties to it continual and actual operations and performance under it, becomes an executed contract by such performance for less than three years of the term, is carrying the doctrine much farther than it has ever been carried, and is decidedly a misnomer. This class of cases is not governed by the doctrine of part performance in a suit in equity for specific performance, nor is this a suit for specific performance. [38] This is an action at law to recover money under a contract which is void, where for nearly three years the parties acted under it, but in which one of them refuses longer to be bound by its provisions; and the argument now set up is that because the defendant has paid for all the actual use it made of the road while engaged in the actual performance of the contract between the dates just given, it is thereby bound for more than ninety-three years longer by the contract which was made without lawful authority by its president and board of directors. We consider this proposition as needing no further consideration, except a reference to the discussion of the same subject in *Thomas* v. *West Jersey R. Co* and *Pennsylvania Railroad Company* v. *St. Louis, A. & T. H. R. Co.*, already cited.

The judgment of the Circuit Court of Oregon is reversed, and the case is remanded to that Court, with a direction to overrule the demurrer, and to take such further proceedings as shall be according to law, and not inconsistent with this opinion.

Mr. Chief Justice **Fuller** was not a member of the court when this case was argued, and took no part in this decision.

Mr. Justice **Field**, dissenting:

I am not able to agree with the majority of the court in the decision of this case. It seems to me clear that a railway corporation of Oregon has the right under her laws to lease its road to another corporation of like character. A foreign corporation, as is the plaintiff below, is by the Act of October 21, 1878, placed on the same footing with a domestic corporation, upon complying with the laws passed for the regulation of such corporations transacting business in the State. That Act declares that, upon such compliance, the foreign corporation shall have "the same rights, powers and privileges" as a domestic corporation.

Besides, the Act of October 22, 1880, entitled "An Act to Grant the Oregonian Railway Company, Limited, the Right of Way and Station Grounds over the State Lands, and Terminal Facilities upon the Public Grounds at the City of Portland," recognizes the plaintiff as an existing corporation, lawfully engaged in the construction and operation of a railway in Oregon, [39] "from Portland to the head of the Willamette Valley," and grants to it "and to its assigns" valuable "rights, privileges, easements, and property," accompanied with a proviso that it shall have no power to sell, convey or assign the premises or rights granted, or any part or parcel thereof, to any person or corporation, "save only with, and as a part and parcel of, and as appurtenant to, the railway now built and owned by said company, and now in process of construction by it." As the court below observed, and it seems to me very justly, this implies that the plaintiff had the power to assign its road, and also the premises and rights thus granted to it in connection therewith, but not otherwise.

I cannot perceive what public policy of the State is sustained by denying to a foreign corporation, which has by her permission constructed a railway therein, the right to lease its road to a domestic corporation. It would rather seem, if any considerations of public policy are to control, that such policy would favor a transfer of the road from foreigners to her own citizens. When the transfer is made the State can exercise over the road, its management, and the charges for its use, the same authority which she could have previously exercised. And there is nothing in the articles of association which forbids the directors of the plaintiff from making such a transfer if the laws of Oregon permit it.

HARRISON H. BALLARD, *Appt.*, [50]

v.

ANSON SEARLS.

(See S. C. Reporter's ed. 50-56.)

Bill of review, when proper.

Where the whole basis and foundation of a suit has disappeared by a decree rendered in another suit after the appeal taken to this court, this court will remand the cause to the circuit court with instructions to allow the appellant, defendant below, to file a supplemental bill in the nature of a bill of review, or a bill to suspend or avoid the operation of the decree, upon the new matter arising from the reversal of the decree in the other case.

[No. 144.]

Submitted Nov. 26, 1888. Decided March 5, 1889.

APPEAL from a decree of the Circuit Court of the United States for the Eastern District of Michigan.

On motion of the appellant for a reversal of the decree upon matters outside of the record and shown to the court. *Cause remanded, with instructions.*

The facts are stated in the opinion.

Mr. **Charles J. Hunt** for appellant, in support of motion.

Mr. **A. G. N. Vermilya** for appellee, in opposition.

[51] *Mr. Justice* **Bradley** delivered the opinion of the court:

The appellant has made a motion that the decree appealed from in this case, so far as it affects the said appellant, be reversed, and that the cause may be remanded to the circuit court with direction to dismiss the bill. This motion proposes that the decree be reversed without argument of the cause, in view of extrinsic facts which are made to appear by the records of this court and of the circuit court, and by affidavits. If such a course can be properly taken [52] in any case, we think it would be improper in the present, since the decree may be perfectly correct and free from objection on the facts of the case as they appear upon the record, and it is possible to be correct, notwithstanding the facts alleged by the appellant. These facts, however, are of such a character that the appellant may be subjected to great injustice if the cause should go to hearing on the appeal in the present condition of the record; and, as they have occurred since the appeal was taken, there seems to be no mode of affording relief to the appellant except by sending the cause back to the circuit court for the purpose of allowing supplementary proceedings to be had in that court.

The facts as stated by the appellant, and not denied by the appellee, are as follows:

"On the 12th day of July, 1880, Anson Searls, the appellee in this cause, filed in the Circuit Court of the United States for the Eastern District of Michigan his bill of complaint against Alva Worden and John S. Worden, for the infringement of a patent; and such proceedings were had in the cause that on the 5th day of September, 1883, a decree was entered in said cause in said circuit court, whereby it was decreed that the said Alva Worden and John S. Worden infringed the patent, and should pay over to the said Anson Searls $24,960.31.

"That upon the entry of said decree the defendants appealed the case to this court. But the defendants, Alva Worden and John S. Worden, were unable to give the necessary bond to operate as a supersedeas bond upon said appeal.

"On the 17th of September, 1883, the complainant issued an execution on his decree, and placed it in the hands of the marshal of said district.

"On the 18th day of September, 1883, the marshal, under the execution, levied upon certain lots in the City of Ypsilanti, County of Washtenaw, and upon certain lands in the Town of Sumpter, County of Wayne, all in the State of Michigan, in the Eastern District thereof, the property of the said appellant, Harrison H. Ballard; and on other lands in the said City of Ypsilanti, belonging to the said Alva Worden [53] and John S. Worden, but which were mortgaged to Mary Ann Andrews, Henry M. Curtis, Henry Van Tuyl and Charles King.

"That, on the 10th day of October, 1883, the said Anson Searls, in aid of his execution against the Wordens, filed in the said Circuit Court of the United States of the Eastern District of Michigan, his bill of complaint against Harrison H. Ballard, Mary A. Andrews, Henry M. Curtis, Henry Van Tuyl, Charles King, Alva Worden and John S. Worden, to set aside as fraudulent and void, as to the creditors of the said Alva Worden and John S. Worden, the conveyances under which the said Harrison H. Ballard held the lands so levied upon; and also the mortgages given by the said Alva Worden and John S. Worden on the said lands belonging to them to the said Mary Ann Andrews, Henry M. Curtis, Henry Van Tuyl and Charles King. That such proceedings were had in said last mentioned cause, that the cause was brought to a final hearing, and a decree entered on the 24th day of November, A. D. 1884, in which it was decreed that the mortgages given by the said defendants Alva Worden and John S. Worden to the said defendants Mary A. Andrews, Henry M. Curtis, Henry Van Tuyl and Charles King, were good and valid liens upon the lands mentioned therein, and that the several conveyances to Harrison H. Ballard, were fraudulent and void as against the creditors of the said Alva Worden and John S. Worden.

"Thereupon the said defendant Harrison H. Ballard prayed an appeal to the Supreme Court of the United States to reverse the said decree, as far as it related to him.

"That the said appeal was allowed and the amount of the appeal bond was fixed at the sum of $8,500. That the said bond was duly executed and approved by one of the judges of the said circuit court, and filed in the office of the clerk of said circuit court. That on the 8th day of October, 1885, the clerk of said Circuit Court of the United States for the Eastern District of Michigan transmitted the transcript of the record in the case of *Anson Searls* v. *Harrison H. Ballard et al.* to the clerk of the Supreme Court of the United States, and that the said transcript was filed in the office of the clerk of this court on the 13th day of October, [54] 1885, and now stands on the docket for the October Term, 1888, as No. 144.

"That since the appeal in this case, the appeal in the original case of *Alva Worden and John S. Worden, Appellants,* v. *Anson Searls* has been heard in this court, and a decree entered thereon on the 27th of March, 1887, wherein and whereby it was, among other things, ordered, adjudged and decreed that the final decree of the said circuit court in this cause be, and the same is hereby, reversed with costs, and that the same be remanded to the said circuit court with a direction to dismiss the bill with costs.

"That on the 8th day of August, 1887, this court issued its mandate in the said case of *Alva Worden et al., Appellants,* v. *Anson Searls* to the said circuit court, in which, among other things, the said Circuit Court of the United States for the Eastern District of Michigan was directed to dismiss the bill with costs.

"That said mandate was filed in the said circuit court on the third day of October, 1887.

"That on the third day of September, 1888, a decree was entered in pursuance of said mandate in the case of *Anson Searls* v. *Alva Worden and John S. Worden* (the original case) dismissing the bill of complaint, with costs."

It is apparent from this statement that the whole basis and foundation of the present suit has disappeared by the decree rendered in the former case of *Worden* v. *Searls*, reported in 121 U. S. 14 [30: 853]. Surely there ought to

be some mode of relieving a party in such a case. The appellee is endeavoring to collect the amount recovered by a decree which has been reversed, and in a case in which his bill has been dismissed on the merits. The object of the present suit is to aid the execution of that former decree by having declared void certain conveyances of property by the defendants, which the appellee has caused to be levied on for the satisfaction of the decree. If the former decree had been reversed before the taking of the present appeal, the appellant could have instituted supplementary proceedings in the circuit court for obtaining the benefit of [55] that reversal. The conveyances sought to be set aside were good as between the parties, and only void as to creditors; and as the appellee, by the reversal of his decree, ceased to be a creditor, his bill to have the conveyances set aside had no longer any ground to stand on. A supplemental proceeding of some kind, therefore, would have been the right of the defendant, the present appellant. But as the case had been removed to this court by appeal before that decree of reversal was rendered, such a proceeding was out of his power. Nor could it be taken in this court, where the case was pending on appeal, for this court cannot entertain proceedings that require the exercise of original jurisdiction, except in the few cases pointed out in the Constitution.

The only course which can be properly pursued is to remand the cause to the circuit court, with instructions to allow the appellant to file a supplemental bill, in the nature of a bill of review, or a bill to suspend or avoid the operation of the decree, according to the mode pointed out by Lord Redesdale in his work on Equity Pleading. He says, on page [86]: "But if a case were to arise in which the new matter discovered could not be evidence of any matter in issue in the original cause, and yet clearly demonstrated error in the decree, it should seem that it might be used as ground for a bill of review, if relief could not otherwise be obtained." And on page [95] he says: "5. The operation of a decree signed and enrolled has been suspended in special circumstances, or avoided by matter subsequent to the decree, upon a new bill for that purpose;" and he gives an instance occurring in the time of Charles II. These views are adopted by Mr. Justice Story in his work on Equity Pleading. (See §§ 415 and note, 428). We do not decide what precise form such a proceeding should take; the appellant will be advised by his counsel in this regard.

The appellee, in opposition to the appellant's motion, has produced the certificates of the Marshal of the United States for the Eastern District of Michigan, showing that, on the 10th day of December, 1884, he sold the property in dispute, or some part thereof, to certain persons, under the execution issued upon the decree in the case of *Anson Searls* v. *Alva Worden and John Worden* [13 Fed. Rep. 716] (which [56] was reversed by this court, as before stated), and that the purchasers would be entitled to a deed of said lands, and the sales would become absolute at the expiration of fifteen months, unless previously redeemed as prescribed by the statute of Michigan.

It is possible that these sales may complicate the inquiry to be made by the court upon the supplemental proceedings of the appellant; but we do not see that they can preclude such proceedings. It is not shown that the purchasers have advanced any money on the faith of the purchases; and it is possible that the appellant can show that they were made for the benefit of the appellee; in either case, the sales would be liable to be set aside on the reversal of the decree. Should the circuit court deem it proper to require that the purchasers be made parties to the supplemental proceedings, the facts of the case could be fully elicited, and right could be done without prejudice to any of the parties.

Our decision is that the cause be remanded to the circuit court, with instructions to allow the appellant, defendant below, to file such supplemental bill as he may be advised, in the nature of a bill of review, or for the purpose of suspending or avoiding the decree, upon the new matter arising from the reversal of the decree in the former case of *Anson Searls* v. *Alva Worden and John Worden*, and that such proceedings be had thereon as justice and equity may require,

And it is so ordered.

---

[43]

HOLLON PARKER, *Appt.*,
v.
GEORGE DACRES, *et al.*

(See S. C. Reporter's ed. 43-50.)

Right to redeem after sale under decree of foreclosure—Practice Act of Washington Territory—laches—refusal of relief—subsequent Territorial Act.

1. The right to redeem within a prescribed time after sale under a decree of foreclosure, given in certain States by statute, is a substantial one, to be recognized in the Courts of the United States sitting in equity, because the statute constitutes a rule of property in the State that enacts it.
2. The Civil Practice Act of Washington Territory of 1873 authorizes the mortgagor before the sale occurs to satisfy the judgment by paying the debt with interest and costs. The right to redeem after sale, wherever it exists, is statutory.
3. A court of equity should refuse aid to a party, asserting under the territorial statute, a right of redemption, who has neglected, without sufficient cause, before the expiration of six months from the confirmation of the sale, to invoke the authority of the proper court or judge to compel the recognition of such right by the officer whose duty it was, under the statute, to accept a tender made in conformity with law.
4. Courts of equity uniformly refuse relief to those who unreasonably delay to invoke their aid.
5. The present case is unaffected by the Act of the Territorial Legislature, approved February 3, 1886, permitting the judgment debtor, or his successor in interest, to redeem any real estate sold under execution of judgment or foreclosure of mortgage.

[No. 157.]

Argued Jan. 31 and Feb. 1, 1889. Decided March 5, 1889.

APPEAL from a judgment of the Supreme Court of the Territory of Washington, affirming a judgment of the District Court of that Territory dismissing, on demurrer, a suit in equity for the redemption of lands sold under a decree of that Court. *Affirmed.*

The facts are stated in the opinion.

Mr. **John H. Mitchell**, for appellant:

The law regulating the right of redemption on sales under execution clearly applies to sales under foreclosure.

Kent v. *Laffan*, 2 Cal. 595; *McMillan* v. *Richards*, 9 Cal. 365; *Besser* v. *Hawthorn*, 8 Oreg. 129.

When one State enacts a statute of another State, it is presumed to adopt the construction which that statute has received by a uniform series of judicial expositions in the courts of the State from which it is taken.

Campbell v. *Quinlin*, 4 Ill. 289; *Little* v. *Smith*, 5 Ill. 402; *Rigg* v. *Wilton*, 13 Ill. 15; *Draper* v. *Emerson*, 22 Wis. 150; *State* v. *Macon Co. Ct.* 41 Mo. 453.

This suit was not barred by the Statute of Limitations. The limitation would commence to run at the expiration of six months from the time of sale.

Boone, Mortg. § 162 and notes; *Clark* v. *Reyburn*, 75 U. S. 8 Wall. 318 (19:354); *Knowlton* v. *Walker*, 13 Wis. 264; *Elmendorf* v. *Taylor*, 23 U. S. 10 Wheat. 168 (6: 289); *Locke* v. *Caldwell*, 91 Ill. 417; *Bolles* v. *Duff*, 43 N. Y. 469;

Courts have uniformly held strongly in favor of the right to redeem.

Henry v. *Davis*, 7 Johns. Ch. 40; *Conway* v. *Alexander*, 11 U. S. 7 Cranch, 218 (3: 321); *Holridge* v. *Gillespie*, 2 Johns. Ch. 30; *Bigler* v. *Waller*, 81 U. S. 14 Wall. 297 (20:891); *Shillaber* v. *Robinson*, 97 U. S. 68 (24:967); *Chicago, D. & V. R. Co.* v. *Fosdick*, 106 U. S. 47 (27:47).

Messrs. C. B. Upton, **W. W. Upton** and *B. L. & J. L. Sharpstein*, for appellees:

The right of redemption was barred by the foreclosure and sale of the mortgaged premises under the decree of the district court.

2 Jones, Mortg. § 1047; 3 Pom. Eq. Jur. § 1128; *Stoddard* v. *Forbes*, 13 Iowa, 296; *Kramer* v. *Rebman*, 9 Iowa, 114; *Gargan* v. *Grimes*, 57 Iowa, 180; *Weld* v. *Rees*, 48 Ill. 428; *Weiner* v. *Heintz*, 17 Ill. 259; *Ballinger* v. *Bourland*, 87 Ill. 513; *Weiss* v. *Alling*, 34 Conn. 60; *Frink* v. *Murphy*, 21 Cal. 108.

If a right to redemption of mortgaged premises after a sale under a decree of foreclosure exists in Washington Territory, it must be statutory and the statute must be strictly complied with.

Herman, Executions, §§ 263-265; *Haskell* v. *Manlove*, 14 Cal. 54; *Gilchrist* v. *Comfort*, 34 N. Y. 235; Freeman, Executions, § 314; *People* v. *Sheriff of Broome*, 19 Wend. 87.

[44] *Mr. Justice* **Harlan** delivered the opinion of the court:

The object of this suit in equity is to obtain a decree for the redemption of certain parcels of real estate in the County of Walla-Walla, Washington Territory, which were sold by the [45] sheriff on the second day of January, 1875, at public auction, under a decree rendered in the District Court of the First Judicial District of that Territory, in the case of *Joseph Petrain* against *Edward Sheil, W. B. Thomas, John F. Abbott, and D. Brouker*. The appellees, who were the defendants below, were purchasers of the several parcels. Before the expiration of six months from the confirmation of the sale, namely, on the 19th of November, 1875, the appellant, who was the plaintiff below, tendered to the sheriff, in lawful money, the amount necessary to redeem the entire property, presenting to him at the time papers showing that he had given to the defendants, at least two days prior to November 10, 1875, notice that he would make such tender; a certified copy of the above decree, with papers showing the amount due thereon; and a duly certified copy of the deed from Sheil, transferring to the plaintiff, on December 28, 1874, all the property in controversy. The sheriff refused to receive the money, and the amount was brought into court at the commencement of this action.

The plaintiff bases his right to redeem upon certain sections of the Civil Practice Act of Washington Territory, approved November 13, 1873 (Laws of Washington, 1873, p. 94), relating to "sales under execution," by one of which, § 364, it is declared that a sale of real property, when the estate is less than a leasehold of two years, unexpired term, shall be absolute, but "in all other cases such property shall be subject to redemption as hereinafter provided in this chapter." That chapter directs the sheriff to deliver to the purchaser a certificate of the sale, and gives the right of redemption to a judgment debtor or his successor in interest, in the whole or in part of the property separately sold, and to a creditor having a lien on any portion of the property, separately sold, by judgment, decree, or mortgage, subsequent in time to that for which the property was sold. § 365. The persons last described are designated by the statute *redemptioners*. By another section the judgment debtor or redemptioner is permitted to redeem the property within six months from the date of the order confirming the sale, by paying the amount of [46] the purchase, with interest at the rate of 2 per cent per month from the time of sale, together with any taxes paid by the purchaser; and, if the purchaser be also a creditor having a lien prior to that of the redemptioner, the amount of such lien with interest. § 366. A succeeding section prescribes the mode of redeeming, namely: "1. The person seeking to redeem shall give the purchaser or redemptioner, as the case may be, two days' notice of his intention to apply to the sheriff for that purpose; at the time specified in such notice such person may redeem by paying to the sheriff the sum required. The sheriff shall give the person redeeming a certificate as in the case of sale on execution, adding therein the sum paid on redemption, from whom redeemed, and the date thereof. A party seeking to redeem shall submit to the sheriff the evidence of his right thereto, as follows: 2. Proof that the notice required by this section has been given to the purchaser or redemptioner, or waived. 3. If he be a lien creditor, a copy of the docket of the judgment or decree under which he claims the right to redeem, certified to the clerk of the court where such judgment or decree is docketed, or, if he seeks to redeem upon mortgage, the certificate of the record thereof. 4. A copy of any assignment necessary to establish his claim, verified by the affidavit of himself or agent showing the amount then actually due on the judgment, decree or mortgage. 5. If the redemptioner or purchaser have a lien prior to that of the lien creditor seeking to redeem,

such redemption or purchaser shall submit to the sheriff thelike evidence thereof and of the amount due thereon, or the same may be disregarded."

In the same Act is a separate chapter regulating foreclosure of mortgages. None of the provisions of that chapter, however, give the right of redemption after a sale under a decree of foreclosure. But it is provided that "The payment of the mortgage debt with interest and costs at any time before sale shall satisfy the judgment." Sec. 563.

The contention of the plaintiff is that the provisions of the chapter relating to "sales under execution," so far as they refer to the right of redemption, apply to sales under decrees [47] of foreclosure. In support of this view they cite decisions of the Supreme Court of California construing similar statutory provisions, from which, it is claimed, the Statute of Washington Territory was copied. *Kent* v. *Laffan*, 2 Cal. 595 (1852); *Harlan* v. *Smith*, 6 Cal. 173 (1858); *McMillan* v. *Richards*, 9 Cal. 365 (1858); *Gross* v. *Fowler*, 21 Cal. 395 (1863). On the other hand it is insisted that the Civil Practice Act of 1873, so far as it related to sales under execution and to sales under decrees for the foreclosure of mortgages, was copied substantially from Iowa Statutes, which, it is contended, did not give the right to redeem after sale under a foreclosure decree. *Stoddard* v. *Forbes*, 13 Iowa, 296 (1862); *Kramer* v. *Rebman*, 9 Iowa, 114 (1859).

In the view we take of this case it is unnecessary to express an opinion whether the provision relating to sales under execution, properly interpreted, gave a right of redemption after sale under a decree of foreclosure. If it did not, the decree below must be affirmed, for a right to redeem, after sale, does not exist unless given by statute. Counsel for the plaintiff speaks of a common-law right of redemption after sale that attaches in the absence of any statutory provision on the subject. We are not aware of any such right existing at common law, or in the system of equity as administered in the courts of England previous to the organization of our government. It is a mistake to suppose that the case of *Clark* v. *Reyburn*, 75 U. S. 8 Wall. 319 [19:355], recognizes a right of redemption after a sale under a foreclosure decree, independently of statute. It is there stated that "By the common law, when the condition of the mortgage was broken, the estate of the mortgagee became indefeasible," and that "equity interposed and permitted the mortgagor, within a reasonable time, to redeem upon the payment of the amount due before sale;" also that, according to the settled practice in equity, when proceedings to foreclose were not regulated by statute, this right to redeem before sale is fixed by the primary decree, and that only in the event of final default in paying the amount ascertained to be due is an absolute sale ordered. The decree in that case was one of strict foreclosure, cutting off the right of redemption before or after sale. It did not find the amount due, [48] and allowed no time previous to the sale to redeem by paying the debt. It was final in the first instance. In many of the States the right to redeem within a prescribed time after sale under a decree of foreclosure is given, in certain cases, by statute. This right, when thus given, is a substantial one, to be recognized even in the Courts of the United States sitting in equity, because the statute constitutes a rule of property in the State that enacts it. *Brine* v. *Hartford F. Ins. Co.* 96 U. S. 627 [24:858]; *Hammock* v. *Farmers Loan & T. Co.* 105 U. S. 77, 88 [26:1111, 1115]; *Mason* v. *Northwestern Mut. L. Ins. Co.* 106 U. S. 164 [27:130]; *Conn. Mut. L. Ins. Co.* v. *Cushman*, 108 U.S. 51, 63 [27:648, 652]. "What is indispensable in such a decree," the court said in *Chicago, D. & V. R. Co.* v. *Fosdick*, 106 U. S. 47, 70 [27: 47, 55], "is, that there should be declared the fact, nature and extent of the default which constitutes the breach of the condition of the mortgage, and which justified the complainant in filing his bill to foreclose it, and the amount due on account thereof, which, with any further sums subsequently accruing and having become due, according to the terms of the security, the mortgagor is required to pay, within a reasonable time, to be fixed by the court, and which, if not paid, a sale of the mortgaged premises is directed." In conformity with these principles the Civil Practice Act of Washington Territory of 1873, in the chapter regulating the foreclosure of mortgages, expressly authorizes the mortgagor before the sale occurs to satisfy the judgment by paying the debt with interest and costs. It is clear that the right to redeem after sale, wherever it exists, is statutory.

If it be assumed that the provisions of the chapter relating to "sales under execution" and which, in terms, gave six months after the confirmation of sale to redeem, applies to sales under decrees of foreclosure, it does not follow that the plaintiff is entitled to relief. The territorial statute, like similar statutes in the several States, evidently contemplated that a redemption, if desired, should be made within a fixed, and comparatively short, period after sale. In few, if in any, of the States is more than one year given. The party seeking to redeem under the Act of 1873 was required to assert his right to do so within six months from [49] the confirmation of the sale. If he failed to do so within that time, the right of the purchaser became complete; for it is expressly declared that "If no redemption be made within six months from the confirmation of the sale, the purchaser shall be entitled to a conveyance from the sheriff." Sec. 368. And the mortgagor was not remediless if, without his fault, there was a failure to redeem within the time prescribed; for, by another section, it is expressly provided that "Where a sheriff shall wrongfully refuse to allow any person to redeem, his right thereto shall not be prejudiced thereby, and upon the submission of the evidence and the tender of the money to the sheriff, as herein provided, he may be required, by order of the court or judge thereof to allow such redemption." Of this mode of enforcing his right to redeem, the plaintiff chose not to avail himself. No reason is assigned why he did not do so. The complaint, upon its face, shows that before the tender to the sheriff he had notice that the purchasers would contest his right to redeem. With knowledge of that fact, and notwithstanding the refusal of the sheriff to accept his tender, he made no application to the court or judge thereof for an order

requiring that officer to allow the redemption. After resting in silence from November 10, 1875, until the institution of this suit on the 15th of May, 1884—a period of nearly nine years—he prayed the assistance of a court of equity for the cancellation of the deeds executed to the several purchasers at the sheriff's sale.

We are of opinion that, construing the statute so as to give effect to the object for which it was enacted, a court of equity should refuse aid to a party, asserting under it a right of redemption, who has neglected, at least without sufficient cause, before the expiration of six months from the confirmation of the sale, to invoke the authority of the proper court or judge to compel the recognition of such right by the officer whose duty it was, under the statute, to accept a tender made in conformity with law. If, as suggested, this remedy is cumulative only, that fact only diminishes the right of the plaintiff to relief; for he not only neglected to avail himself of this specific remedy, but failed to invoke, in due time, the gene-
[50] ral authority of a court of equity. The interpretation we give to the statute is supported by the principle upon which courts of equity uniformly proceed, independently of any Statute of Limitations, of refusing relief to those who unreasonably delay to invoke their aid. *Richards* v. *Mackall*, 124 U. S. 183, 187 [31: 396, 399].

To avoid misapprehension, it is proper to observe that what we have said has reference only to cases arising under the Civil Practice Act of 1873. The present case is unaffected by the Act of the Territorial Legislature, approved February 3, 1886, permitting the judgment debtor, or his successor in interest, to redeem any real estate sold under execution of judgment or foreclosure of mortgage, at any time within one year from the date of sale, by paying the amount of the purchase money, with interest at the rate of 1 per centum per month thereon from the date of sale, together with the amount of any taxes the purchaser may have paid.

The decree is affirmed.

---

[39] ALGERNON S. BADGER, Collector of the Port of NEW ORLEANS, *Plff. in Err.*,

v.

A. CUSIMANO & COMPANY, a Commercial Firm, Composed of ANGELO CUSIMANO and CHARLES P. ADONE.

(See S. C. Reporter's ed. 39-43.)

Duties on imports—oranges—illegal exaction.

1. Under section 7 of the Act of March 3, 1883, chap. 121, 22 Stat. at L. 488, 523, the value of the charges specified in sections 2907, 2908, Revised Statutes, including the value of the boxes used in the transportation of goods imported from other countries, is to be excluded from the estimate of the amount of duties collectible upon such goods.

2. The duties payable upon oranges, imported, are to be ascertained with reference only to their true and actual market value.

3. The question whether the collector acted within the power conferred upon him by statute when he required the importers to pay duties, not only upon the actual market value of the goods, but upon an additional value equal to the value of the cases covering the goods, is distinct from any inquiry as to fraud in the appraisement, and may be raised by the importer in an action at law for the recovery of duties illegally exacted from him.

[No. 179.]

Argued Jan. 31, 1889. Decided March 5, 1889.

IN ERROR to the Circuit Court of the United States for the Eastern District of Louisiana, to review a judgment in favor of plaintiff in an action for the recovery of duties illegally exacted. *Affirmed.*

The facts are stated in the opinion.

Mr. **Wm. A. Maury**, *Assist. Atty-Gen.*, for plaintiff in error:

Fraud apart, the appraisement is conclusive. *Hilton* v. *Merritt*, 110 U. S. 97 (28: 83).

Every presumption is in favor of appraisements and liquidations.

Chicago Tyre & Spring Co. v. *Spaulding*, 116 U. S. 547 (29: 722).

Substantial compliance with the law (R. S. § 2930) is all that is necessary.

Oelbermann v. *Merritt*, 123 U. S. 367 (31: 168).

Messrs. Chas. B. Singleton and **Richard H. Browne** for defendants in error.

Mr. Justice **Harlan** delivered the opinion [40]
of the court:

This is an action for the recovery of the sum of $1,400.07, with interest, being the amount of certain duties which, it is alleged, were illegally exacted from the defendants in error. The case was tried by the court pursuant to a stipulation between the parties waiving the intervention of a jury.

The court found "the issues of fact raised by the pleadings in favor of the plaintiffs." We must assume, therefore, that the facts were as alleged by the plaintiffs in their pleadings.

It is alleged in the petition and amended petition that the plaintiffs were importers of and dealers in foreign fruits at New Orleans; that, in December, 1883, and January, 1884, they imported several cargoes of Valencia oranges on the steamships Pontiac, Norfolk, North Anglia, Vindolano, and Ehrenfels, aggregating 21,165 cases, each case being over 2½ cubic feet; that the invoice value of the oranges was 177,310 pesetas, while the invoice value of the charges (composed of value of cases, nails, packing, bands, cost of transportation, etc.) [41
was 120,990 pesetas, making the total invoice value of fruit and charges 298,300 pesetas; that the fruit as it arrived was duly entered in the Customs Department at New Orleans, the fruit at its true invoice value, which was its true market value at the date of the respective importations, and the charges at their true invoice value; that, nevertheless, the collector, without pretending that there was any mistake or fraud in the invoice value of the fruit, caused an appraisement of each importation to be made, despite the protest and remonstrance of petitioners, and thereby increased the invoice value of the fruit, and reduced the invoice value of the charges in each, increasing the value of the fruit by just so many pesetas as the invoice value of the charges was reduced, and making a total increase of 36,271.15 pesetas in the value of the fruit, equal to $7,000.33 in American coin, upon which petitioners were obliged to pay 20 per cent duty, or $1,400,07; that as soon as the liquidations of each and all

of the entries were made by the Customs Department, and within thirty days thereafter, the petitioners appealed from the decision of the collector to the Secretary of the Treasury; that the Secretary, on the 18th of February, 1885, decided that it appeared that the "fruit in question was invoiced at a value which properly represented its market value, but that the value of the boxes, packing, etc., was excessive, and was reduced by the appraiser, and the value of the fruit advanced to the same extent," and affirmed the decision of the collector; that one of the merchant appraisers appointed by the collector knew nothing of the value of Valencia oranges or of the charges thereon, and so admitted; that none of the oranges, nor any samples thereof, were submitted to or examined by the merchant appraisers, which facts were specifically set forth in plaintiffs' protest, filed with the collector, against the appraisement; and that all the subsequent appraisements of shipments, other than the shipment by The Pontiac, were based upon the above merchant appraisement, and an appeal to the Secretary of the Treasury was refused, on the ground that such appraisement was binding.

The effect of section 7 of the Act of March 3, 1883, c. 121, 22 Stat. at L. 488, 523, was to exclude from the estimate of the amount of duties [42] collectible upon goods imported from other countries, the value of the "charges" specified in sections 2907 and 2908 of the Revised Statutes, including the value of the usual and necessary sacks, crates, boxes, or covering of any kind, not composed of materials or made in any form designed to evade duties thereon, but used in the *bona fide* transportation of such goods to the United States. The duties, therefore, for which the plaintiffs were liable in respect to the oranges they imported, were to be ascertained with reference only to their true and actual market value. *Oberteuffer* v. *Robertson*, 116 U. S. 499, 509, 510 [29:706, 709]. That the collector made a reduction of the invoice value of the charges is of no consequence, because such charges were not dutiable items. He did what the law did not authorize him to do, namely: increased the dutiable value of the oranges, although they were invoiced and entered at their true market value. The additional duties exacted from the plaintiffs on this increased value amounted to the sum for which the judgment was rendered.

It is insisted, however, that this question cannot arise upon the present writ of error. The only bill of exceptions taken in the case states, "that on the trial of the cause the plaintiffs offered evidence tending to show that the value fixed on goods imported by them was excessive, and that the appraisement of said goods was erroneous; to the reception of which evidence defendant objected, on the ground that said goods were duly appraised, and that the appraisement is final and conclusive in the absence of fraud, which is not alleged, and on the further ground that such evidence is not admissible under the allegations of plaintiffs' petition, which objections were overruled by the court, and said evidence received, to wit: on ground, because, in the opinion of the court, it is not necessary to allege fraud."

The contention of the Government is that as fraud was not specifically alleged in respect to the appraisement, the court erred in admitting and considering evidence to impeach it. This position is supposed to be sustained by the case of *Hilton* v. *Merritt*, 110 U. S. 97, 106 [28:83, 86]. In that case it was said: "Considering the Acts of Congress as establishing a system, and giving force to all the sections, its plain and [43] obvious meaning is that the appraisement of the customs officers shall be final; but all other questions relating to the rate and amount of duties may, after the importer has taken the prescribed steps, be reviewed in an action at law to recover duties unlawfully exacted." Again: "The valuation made by the customs officers was not open to question in an action at law as long as the officers acted without fraud and within the power conferred on them by the statute." In the case before us there is no impeachment of the appraisement, so far as it states the value of the charges or the value of the goods, as increased by the amount of the reduction made from the value of the charges. The only inquiry is whether the collector acted within the power conferred upon him by statute when he required the importers to pay duties, not only upon the actual market value of the goods, but upon such additional value as was equal to the reduction made from the value of the cases covering the goods. These are questions of law simply, involving the power of the collector under the statute. They are entirely apart from any inquiry as to fraud in appraisement, or as to the values set forth in it, and may be raised by the importer in an action at law, when he has taken such steps as entitle him to bring suit for the recovery of duties illegally exacted from him. This ruling is entirely consistent with the decision in *Hilton* v. *Merritt*.

Judgment affirmed.

UNITED STATES, *Appt.*, [80]

v.

MALBONE F. WATSON.

(See S. C. Reporter's ed. 80-82.)

Longevity pay to army officer.

The time of the service of a cadet in the Military Academy at West Point is to be regarded as part of the time he served in the army, within the meaning of the Act of July 5, 1838, and should be counted, in computing his longevity pay under that Act; and he is entitled to receive so much of the amount thereon thus computed as is not barred by the Statute of Limitations.

[No. 369.]

Submitted Jan. 4, 1889. Decided March 11, 1889.

APPEAL from a judgment of the Court of Claims, in favor of claimant for longevity pay. *Affirmed.*

The facts are stated in the opinion.

Messrs. **A. H. Garland**, *Atty-Gen.*, **R. A. Howard**, *Assist. Atty-Gen.*, and *F. P. Dewees*, *Assist. Atty.*, for the United States, appellant.

Messrs. **R. B. Warden** and **W. W. Warden** for appellee.

Mr. Justice **Lamar** delivered the opinion of the court:

On the 24th of February, 1886, the appellee,

Malbone F. Watson, filed his petition in the Court of Claims, in substance, as follows:

Claimant entered the United States Military Academy as a cadet, July 1, 1856; was appointed a second lieutenant of cavalry, May 6, 1861; first lieutenant of artillery, May 14, 1861; captain, March 9, 1866; retired from active service for loss of his right leg from wound received in line of duty, September 18, 1868. In computing his service for longevity pay he claims to be entitled to count his time as a cadet under the Acts of July 5, 1838, 5 Stat. at L. 256; March 2, 1867, § 9, 14 Stat. at L. 423; July 15, 1870, R. S. 1262. By so crediting his service, claimant alleges there is due him up to the time of filing his petition the sum of $2,611.10.

To this petition the United States filed a general demurrer, which was sustained as to that part of the claim accruing six years before the filing of the petition, and overruled as to the rest of it, without prejudice. The court thereupon [81] rendered judgment in favor of claimant for $126.22. The United States appealed.

The ground upon which this judgment rests is, that the time of the service of claimant as a cadet in the Military Academy at West Point is to be regarded as a part of the time he served in the army within the meaning of the Act of July 5, 1838, and should be counted in computing his longevity pay under that Act; and that he is entitled to receive so much of the amount thereon thus computed as is not barred by the Statute of Limitations.

The provisions of the Acts of Congress, relied upon as the foundation of the claim of the appellee, are as follows:

Sec. 15, Act of July 5, 1838:

"Every commissioned officer of the line or staff, exclusive of general officers, shall be entitled to receive one additional ration per diem for every five years he may have served or shall serve in the army of the United States: *Provided*, That in certain cases where officers are entitled to and receive double rations, the additional one allowed in this section shall not be included in the number to be doubled."

Sec. 9, Act of March 2, 1867:

"That section 15 of the 'Act to increase the present military establishment of the United States, and for other purposes,' approved July 5, 1838, be amended so that general officers shall not hereafter be excluded from receiving the additional ration for every five years' service; and it is hereby further provided that officers on the retired list of the army shall have the same allowance of additional rations for every five years' service as officers in active service."

Act of July 15, 1870, now § 1262, Rev. Stat.:

"There shall be allowed and paid to each commissioned officer below the rank of brigadier-general, including chaplains and others having assimilated rank or pay, ten per centum of their current yearly pay for each term of five years of service."

That cadets at West Point were always part of the army, and that service as a cadet was always actual service in the army, has been settled by the decisions of this court in the case of *United States* v. *Morton*, 112 U. S. 1 [28: 613], in which a question almost identical with [82] the one now before us was presented for consideration. In that case, Morton, the claimant, had entered the United States Military Academy at West Point as a cadet, July 1, 1865, had graduated therefrom June 15, 1869, and had served in the army as a commissioned officer from that date until March 31, 1883. In computing his service pay the accounting officers did not allow him credit for the time he had been a cadet at West Point as part of his time of service in the army; and he accordingly brought suit in the Court of Claims under the Acts of February 24, 1881, and June 30, 1882, 21 Stat. at L. 346, and 22 Stat. at L. 118, respectively. These Acts, among other things, provided that "Additional pay to officers for length of service, to be paid with their current monthly pay, and the actual time of service in the army or navy, or both, shall be allowed all officers in computing their pay." The Court of Claims rendered judgment in favor of the claimant, which, on an appeal prosecuted on behalf of the United States, was affirmed by this court. In the opinion of the court it was stated that "The only question for decision is whether the time of service as a cadet is to be regarded as 'actual time of service in the army.'" The court, after an elaborate examination and discussion of the laws bearing thereon and having relation thereto, answered that question in the affirmative, and said:

"From this review of the statutes, it cannot be doubted that, before the passage of the Act of July 28, 1866 (now § 1094, R. S., which in so many words classes the cadets at West Point as a part of the army of the United States), as well as afterwards, the corps of cadets of the Military Academy was a part of the army of the United States, and a person serving as a cadet was serving in the army. . . . The practical construction of the requirement of the Act of 1838, that the cadet should engage to serve for eight years, shown by the fact that the form of the engagement in this case was to 'serve in the army of the United States for eight years,' is a circumstance of weight to show that the Government, from the beginning, treated the plaintiff as serving in the army. The service for which he engaged began on the 1st of July, 1865, and the eight years ran from that time. That being his status, the Acts of 1881 and 1882, in speaking of 'actual time of [83] service in the army,' cover the time of his service as a cadet. . . . Under the statutes involved in the present case, a cadet at West Point is serving in the army as fully as an officer retired from active service is serving in the army, under the statutes which apply to him, so far as the question of longevity pay is concerned."

More direct and emphatic language could not be used to support the contention of the claimant in this case. The words "actual time of service in the army," as used in the Act of February 24, 1881, are not more expressive of cadet service at West Point, than are the words "for every five years he may have served or shall serve in the army of the United States," as used in the Act of July 5, 1838. They both mean the same kind of service; and we are of the opinion that such service should be reck-

oned in computing longevity pay prior, as well as subsequent, to the Act of February 24, 1881.

We also concur with the Court of Claims, that in this case there can be no recovery for any part of the claim that accrued prior to February 24, 1880, the day when the bar of the Statute of Limitations took effect. R. S. § 1069. The claim sued on is valid as to that part of it which accrued after that date.

For these reasons the judgment of the Court of Claims is affirmed.

---

[69] THE ARKANSAS VALLEY LAND AND CATTLE COMPANY (Limited), *Plf. in Err.*,

v.

JEREMIAH J. MANN.

(See S. C. Reporter's ed. 69-79.)

Remission of part of a verdict—when proper and effect of—granting or refusing new trial, not reviewable—sale of property—retaining possession—increase of domestic animals—damages for conversion.

1. The exaction, as a condition of refusing a new trial, that the plaintiff should remit a portion of the amount awarded by the verdict, is a matter within the discretion of the court.
2. To require a plaintiff to submit to a new trial, unless he remits a part of the verdict, does not deprive the defendant of any right, or give him any cause for complaint. Notwithstanding such remission, it is still open to him to show, in the court which tried the case, that the plaintiff was not entitled to any sum, and to insist that such errors of law were committed as entitled him to have a new trial of the whole case.
3. This court is not authorized to assume, from the mere fact that a large sum was remitted, that the court below believed that the jury were governed by prejudice, or willfully disregarded the evidence.
4. The granting or refusing a new trial in a Circuit Court of the United States is not subject to review by this court.
5. The retention of possession of property by the sellers until, and as security for, the payment of the price, is not inconsistent with an actual sale by which title passed to the buyer.
6. In an action for conversion of cattle, the plaintiff, if entitled to anything, is entitled to the value of the animals with their increase up to the time of the demand made, not to the commencement of the suit. The brood of all tame and domestic animals belongs to the owner of the dam or mother.
7. In actions for conversion of domestic animals intended for sale and consumption, the plaintiff is allowed damages equal to the value of the property at the time of conversion, with interest, at the established legal rate, from that date.

[No. 147.]

Argued Jan. 4, 7, 1889. Decided March 5, 1889.

IN ERROR to the Circuit Court of the United States for the District of Colorado, to review a judgment for plaintiff in an action for damages for the conversion of cattle. *Affirmed.*

The facts are stated in the opinion.

Messrs. **Wm. A. Maury** and **Hugh Butler**, for plaintiff in error:

Taking possession in denial of the owner's right is a conversion.

Cooley, Torts, 451.

If the value of the cattle was subsequently enhanced by the care, attention, foresight and expenditure of money by the defendant, the plaintiff could not claim it.

Note to Cooley, Torts, 458; *Winchester* v. *Craig*, 33 Mich. 205.

The charge given took from the jury all the questions of fact.

Hodges v. *Easton*, 106 U. S. 408 (27: 169).

The verdict was excessive.

Thomas v. *Womack*, 13 Tex. 583; *Nudd* v. *Wells*, 11 Wis. 407; *Lambert* v. *Craig*, 12 Pick. 199; *George* v. *Law*, 1 Cal. 363; *Johnson* v. *Root*, 2 Cliff. 108; *Baylis* v. *Travelers Ins. Co.* 113 U. S. 320 (28: 990); *Loewenthal* v. *Streng*, 90 Ill. 74.

Compensatory damages were all the jury were justified in awarding under the evidence.

Sampson v. *Smith*, 15 Mass. 367; *Coffin* v. *Coffin*, 4 Mass. 1; *Baylis* v. *Travelers Ins. Co.* 113 U. S. 320 (28: 990); *Burdell* v. *Denig*, 92 U. S. 723 (23: 767).

Messrs. *E. T. Wells* and **R. T. McNeal**, for defendant in error:

For the court to direct the jury by what process they were to determine an issue would have been manifest error.

Standard Oil Co. v. *Van Etten*, 107 U. S. 334 (27: 322).

Plaintiff could have maintained replevin not only for the original stock in the possession of defendant, but also for their increase.

Bolles Wooden-Ware Co. v. *U. S.* 106 U. S. 435 (27: 231).

In trespass and trover nothing short of judgment satisfied passes title to the property.

Lovejoy v. *Murray*, 70 U. S. 3 Wall. 1 (18: 129).

The ownership of the increase of animals follows that of the dam.

Jordan v. *Thomas*, 31 Miss. 562-3; *Buckley* v. *Buckley*, 12 Nev. 436-39; *Baker* v. *Wheeler*, 8 Wend. 505, 24 Am. Dec. 73-85.

The full value of property at conversion with interest thereon is the measure of damages in trover.

Cooley, Torts, 457, note 1; Sutherland, Dam. 173-4; Note to *Wooley* v. *Carter*, 11 Am. Dec. 528, 7 N. J. L. 85; Note to *Baker* v. *Wheeler*, 24 Am. Dec. 71, 72, 8 Wend. 505.

The practice of remitting a part of a judgment by the appellate court, where the excess can be ascertained from the record, has been recognized by this court.

Bank of Ky. v. *Ashley*, 27 U. S. 2 Pet. 327.

And this practice very generally prevails in the appellate courts of the several States.

1 Sutherland, Dam. 811-815.

Mr. Justice **Harlan** delivered the opinion [70] of the court:

This is an action for the recovery of damages for the alleged unlawful conversion by the defendant, the Arkansas Valley Land and Cattle Company (Limited), to its own use, of certain cattle. The complaint, which is framed in conformity with the local law, contains three distinct causes of action.

The first count claims seventy-one thousand dollars in damages for the unlawful conversion, at the County of Weld, Colorado, of fourteen hundred and fifty-two head of Oregon cattle, all branded on the right side or loin with what is commonly known as the bar brand, and of which seven hundred and forty-two were

steers, alleged to be of the value of forty-four thousand five hundred and twenty dollars, and seven hundred cows, alleged to be of the value of twenty-one thousand dollars.

The second count claims eighty thousand dollars in damages for the conversion by the defendant of one thousand and thirty-six Oregon steers, alleged to be of the value of sixty-two thousand dollars, and marked, among [71] other brands, with the letter "T" on the left side, which cattle R. T. Kelly, A. J. Gillespie, T. E. Gillespie, Louis J. Gillespie, J. F. Gillespie, and G. O. Keck once owned, but their claim for damages, on account of said conversion, had been assigned, transferred, and set over to the plaintiff.

The third count claims seventy-one thousand dollars in damages for the conversion of seven hundred head of Oregon cows and twelve bulls, of the alleged value of twenty-one thousand dollars, and fifteen hundred head of young cattle, the increase of the cows last mentioned, and of the actual value of fifty thousand dollars.

Judgment is asked upon all the counts for the sum of two hundred and twenty-one thousand dollars.

There was evidence relating to a herd of about two thousand steers and cows of various ages, all branded, which the plaintiff claimed to have bought from Slagle and Jordan in October, 1880. His contention is that at the time of the purchase that herd was at or near Rock Creek Station on the Union Pacific Railroad, in the Territory of Wyoming; that under an arrangement, part of his contract of purchase, he caused to be shipped, out of this herd, to Omaha or Council Bluffs for sale at prices fixed by that contract, about six hundred head; that the remainder, about fourteen hundred in number, were driven, in the same month, to Sheep Creek Basin, about twenty miles distant from Rock Creek; that in December they fled or drifted before a severe wind and snow storm from the west and northwest, until they came to the head of Sheep Creek Basin, thence passed over the Black Hills Range, and moved in an easterly and southerly direction until they reached the ranch of one Bloomfield, in Colorado, and were by him taken possession of, without right, and sold to the defendant, a corporation of which he was general manager.

There was evidence as to another herd of about 1,200 steers, marked with a T brand on the left side, and belonging to Gillespie & Co., which disappeared about the same time from the same region in Wyoming Territory. This herd, it was claimed, also found its way to Bloomfield's ranch, and were by him sold without right to the defendant.

[72] Early in the year 1884, the complainant made demand upon the defendant, through Bloomfield, as its manager, for the above cattle, including those formerly owned by Gillespie & Co., to whose rights the plaintiff had succeeded. The demand was refused upon the ground that the defendant had not received any cattle belonging to the plaintiff.

The answer put in issue the plaintiff's ownership of the cattle described in the complaint, and relied also upon certain facts in bar of any recovery against the defendant. The plaintiff filed a replication controverting all the new matters set out in the answer.

After a protracted trial, the jury returned a verdict in favor of the plaintiff for the sum of $39,958.33. There was a motion by the defendant for a new trial, as well as one in arrest of judgment.

The court decided that if the plaintiff would remit the sum of twenty-two thousand eight hundred and thirty-three dollars and thirty-three cents from the amount of the verdict, the motion for a new trial should be denied; but if he declined to do so, a new trial should be granted. In accordance with this decision, the plaintiff remitted the above sum, and stipulated in writing that judgment might be entered for the sum of $17,125. The motion for new trial, and the motion in arrest of judgment, were overruled, and judgment was entered for the latter sum. To the action of the court in respect to this remission, and to the order denying the motions for new trial and in arrest of judgment, the defendant excepted.

1. The point was much pressed at the bar that the remission by the plaintiff of a part of the verdict, followed by a judgment for the sum remaining, deprived the defendant of his constitutional right to have the question of damages tried by a jury, without interference upon the part of the court, except as it became necessary to instruct them in reference to the principles of law governing the determination of that question. The precise contention is, that to make the decision of the motion for a new trial depend upon a remission of part of the verdict, is in effect a re-examination by the court, in a mode not known at the common law, of facts tried by the jury, and therefore was a [73] violation of the Seventh Amendment of the Constitution.

The counsel for the defendant admits that the views expressed by him are in conflict with the decision in *Northern Pac. R. Co.* v. *Herbert*, 116 U.S. 642, 646 [29:755, 758]; but he asks that the question be re-examined in the light of the authorities. That was an action against a railroad company for the recovery of damages resulting from the negligence of its representative, whereby the plaintiff sustained serious personal injury. The verdict was for $25,000, and a new trial was ordered, unless the plaintiff remitted $15,000 of the verdict. He did remit that sum, and judgment was entered for $10,000. This court said: "The exaction, as a condition of refusing a new trial, that the plaintiff should remit a portion of the amount awarded by the verdict was a matter within the discretion of the court. It held that the amount found was excessive, but that no error had been committed on the trial. In requiring the remission of what was deemed excessive, it did nothing more than require the relinquishment of so much of the damages as, in its opinion, the jury had improperly awarded. The corrected verdict could, therefore, be properly allowed to stand," citing *Blunt* v. *Little*, 3 Mason, 102, 106; *Hayden* v. *Florence Sewing Machine Co.* 54 N.Y. 221, 225; and *Doyle* v. *Dixon*, 97 Mass. 208, 213. In *Blunt* v. *Little*, which was an action for malicious civil prosecution, in which the verdict was for two thousand dollars, *Mr. Justice* Story, while admitting that the exercise of

the discretion of the court to disturb the verdict of the jury was full of delicacy and difficulty, recognized it to be a duty to interfere, when it clearly appeared that the jury had committed a gross error, or acted from improper motives, or had given damages that were excessive in relation either to the person or the injury; and held that the cause then before him should be submitted to another jury unless the plaintiff remitted $500 of the damages. The remission was made and the new trial refused. In *Doyle* v. *Dixon*, which was an action for breach of contract, the language of the court was: "When the damages awarded by the jury appear to the judge to be excessive, he may [74] either grant a new trial absolutely, or give the plaintiff the option to remit the excess, or a portion thereof, and order the verdict to stand for the residue." To the same effect are many other cases. *Guerry* v. *Kerton*, 2 Rich. L. 507, 512; *Young* v. *Englehard*, 1 How. (Miss.) 19; *Diblin* v. *Murphy*, 3 Sandf. 20. See also numerous authorities collected in Sedgwick, Damages, 6th ed. 765, note 3; 1 Sutherland, Damages, 812, note 2; 3 Graham & Waterman, New Trials, 1162.

The practice which this court approved in *Northern Pac. R. Co.* v. *Herbert* is sustained by sound reason, and does not, in any just sense, impair the constitutional right of trial by jury. It cannot be disputed that the court is within the limits of its authority when it sets aside the verdict of the jury and grants a new trial where the damages are palpably or outrageously excessive. *Ducker* v. *Wood*, 1 T. R. 277; *Hewlett* v. *Cruchley*, 5 Taunt. 277, 281; authorities cited in Sedgwick, Damages, 6th ed. 762, note 2. But, in considering whether a new trial should be granted upon that ground, the court necessarily determines, in its own mind, whether a verdict for a given amount would be liable to the objection that it was excessive. The authority of the court to determine whether the damages are excessive implies authority to determine when they are not of that character. To indicate, before passing upon the motion for a new trial, its opinion that the damages are excessive, and to require a plaintiff to submit to a new trial, unless, by remitting a part of the verdict, he removes that objection, certainly does not deprive the defendant of any right, or give *him* any cause for complaint. Notwithstanding such remission, it is still open to him to show, in the court which tried the case, that the plaintiff was not entitled to a verdict in any sum, and to insist, either in that court or in the appellate court, that such errors of law were committed as entitled him to have a new trial of the whole case.

But it is contended that the plaintiff could not have been required to remit so large a sum as $22,833.33, except upon the theory that the jury, in finding their verdict, were either governed by passion, or had deliberately disregarded the facts that made for the defendant— [75] in either of which cases, the duty of the court was to set aside the verdict as one not fit to be the basis of a judgment. Undoubtedly, if such had been the view which the court entertained of the motives or conduct of the jury, it would have been in accordance with safe practice to set aside the verdict and submit the case to another jury. That was the course pursued in *Stafford* v. *Pawtucket Haircloth Co.* 2 Cliff. 82. In that case *Mr. Justice* Clifford, after observing that the damages were greatly excessive and without support in evidence, said: "Such errors may in many cases and under most circumstances be obviated by remitting the amount of the excess; but where the circumstances clearly indicate that the jury were influenced by prejudice or by a reckless disregard of the instructions of the court, that remedy cannot be allowed. Where such motives or influences appear to have operated, the verdict must be rejected, because the effect is to cast suspicion upon the conduct of the jury and their entire finding."

This court is not, however, authorized to assume, from the mere fact that $22,833.33 was remitted, that the court below believed that the jury were governed by prejudice, or willfully disregarded the evidence. On the contrary, it may be inferred that the amount for which the plaintiff was entitled to a verdict was ascertained by the court, after a calculation based upon the prices of cattle as given by numerous witnesses; or that the court became satisfied that the preponderance of evidence as to the ownership of some of the cattle was against the plaintiff; or, as to other cattle, that they were not traced to the possession of the defendant. But, independently of this view, and however it was ascertained by the court that the verdict was too large by the above sum, the granting or refusing a new trial in a Circuit Court of the United States is not subject to review by this court. *Parsons* v. *Bedford*, 28 U. S. 3 Pet. 433, 447 [7: 732]; *Mercantile Mut. Ins. Co.* v. *Folsom*, 85 U. S. 18 Wall. 237, 248 [21: 827,832]; *New York Cent. & H. R. R. Co.* v. *Fraloff*, 100 U. S. 24, 31 [25: 531,534]. Equally beyond our authority to review, upon a writ of error sued out by a party against whom a verdict is rendered, is an order overruling a motion for a new trial, after the plaintiff, with leave of the court, has remitted a part of the verdict. Whether the verdict should be entirely set aside upon the [76] ground that it was excessive, or was the result of prejudice, or of a reckless disregard of the evidence or of the instructions of the court, or whether the verdict should stand after being reduced to such amount as would relieve it of the imputation of being excessive, are questions addressed to the discretion of the court, and cannot be reviewed at the instance of the party in whose favor the reduction was made. Under what circumstances, if any, a party who is compelled to remit a part of the verdict, in order to prevent a new trial, can complain before this court, we need not decide in the present case.

If the Circuit Court had entered judgment for the whole amount of the verdict below, the defendant could have made no question in this court as to its being excessive. We could only, in that case, have considered matters of law arising upon the face of the record. And we can do no more when the defendant brings to us a record, showing that the court below has, in the exercise of his discretion, compelled the opposite side, as a condition of its overruling a motion for a new trial, to remit a part of the verdict.

2. In support of the plaintiff's claim to have

purchased the Slagle-Jordan herd of cattle, and his right to bring suit for their conversion, the following agreement was proven and read in evidence:

"SHEEP CREEK, WYO. TER., *Oct.* 11, 1880.

"Memorandum of agreement made and entered into this date by and between C. Slagle and John Jordan, of Hepner, Umatilla County, Oregon, and J. J. Mann, of Albany County, Wyo. Ter.

"Party of the first part has this day sold the following neat cattle to the said party of the second part in consideration of one dollar, the receipt of which is hereby acknowledged, two thousand head (2000), more or less, classed as follows, to wit—[here follows classification of steers, cows, and heifers, according to ages and price per head, and also description of the brands on the different lots constituting the herd]—title guaranteed.

[77] "Party of the second part agrees to pay for them as follows, to wit: To ship the three and four year old feeders to Council Bluffs or to Omaha, and in the name of Jordan and Slagle, to the number of six hundred (600) head. If there is not that number of threes and fours, then to ship twos to make up the number six hundred (600), and to guarantee the cattle to net them $26.00, $24 for all, respectively, up to the full number of threes and fours, and the excess to be reckoned at $18 per head if the threes and fours should not reach six hundred (600); also to pay $2,000 before cattle are shipped, cash, and the loss on the steers so shipped so soon, if any, as the steers are sold, and money paid to them, Slagle and Jordan, within two days after reaching market. If the steers should net more than the above prices, then the net profit to be credited to party of second part; the balance of said payment to be in ten (10) months from the fifteenth of October (Oct. 15th), A. D. 1880, with interest at the rate of twelve per cent per annum, seller to retain possession of the balance of the herd until the last payment is made.

"(Signed) "C. SLAGLE.
"JOHN JORDAN. [SEAL.]
"J. J. MANN. [SEAL.]
"Witness: Chas. G. Mantz."

The instructions asked by the defendant proceeded upon the ground that this agreement was executory only, and that the right of property remained in the seller, Mann acquiring only the right to buy according to the terms of the agreement. The charge of the court was based upon the theory that the title passed by the agreement to Mann; the seller retaining possession of that part of the herd not shipped to Omaha or Council Bluffs, simply as security for the amount the buyer agreed to pay. We concur in the view taken by the circuit court. Any other interpretation would, in effect, declare that title could, in no case, pass to a buyer while possession remains with the seller for any purpose whatever. Slagle and Jordan certainly intended to vest Mann with the title, at the date of the bill of sale in question; for that [78] instrument recites that the owners had, on the day of its execution, "sold" the cattle to him, and that recital is followed by clauses guaranteeing the title, and providing the mode in which the buyer was to make payment. Here are all the elements of an actual sale, as distinguished from an executory agreement. The retention of possession by the sellers until, and as security for, the payment of the price, was not inconsistent with an actual sale by which title passed to the buyer. The agreement in question is unlike that in *Harkness* v. *Russell*, 118 U. S. 663 [30: 285], which expressly declared that neither the title, ownership, nor possession should pass from the seller until the note given by the buyer for the stipulated price was paid.

3. The plaintiff asked the following instruction: "If you find that defendant converted any of the cattle belonging to plaintiff, and that among those converted were cows which either had calves with them at the time of the conversion or afterwards and before the commencement of this suit had calves, then you are instructed that the plaintiff is entitled to recover the value of such calves or increase, and you may consider as evidence of the number of such increase the average increase of cattle for the years between the time you may find the company took possession and the institution of this suit." The court below observed: "That is true, substituting for 'the institution of this suit' the time when the demand was made for the cattle. The plaintiff, if entitled to anything, is entitled to the value of the animals with their increase up to the time of the demand made, not the commencement of the suit but the making of the demand." The defendant insists that this instruction was erroneous. But, in our judgment it is correct. The calves of such of the cows as belonged to the plaintiff, and were converted by the defendant, certainly belonged to the former; for, according to the maxim, *partus sequitur ventrem*, the brood of all tame and domestic animals belongs to the owner of the dam or mother. 2 Bl. 390. The defendant's liability as for conversion extended, at least, to such of the calves, the increase of plaintiff's cows, as were in existence at the time of demand and conversion. As it was not informed of the plaintiff's claim of ownership [79] until his demand in January, 1884, the conversion must be taken to have occurred when it refused to comply with such demand. The plaintiff, if entitled to recover, was entitled to damages proportioned to the value of the cows and their calves at the time of conversion. The damages could not properly exceed the value of the property at that date, and less than that would not be sufficient compensation.

4. Error is assigned by the defendant in relation to that part of the charge stating that the plaintiff, if entitled to recover, was entitled to interest from the time of demand, at the rate of ten per cent. That is the rate of interest allowed by the Statutes of Colorado on the forbearance or loan of money, where there is no agreement between the parties. Gen. Stat. Col. 1883 (1706), p. 559. In *Machette* v. *Wanless*, 2 Colo. 180, which was an action of replevin, in which damages were claimed for the detention of personal property, the court said, that "where the property is domestic animals, valuable for service only, the value of the use of the animal is, of course, the measure of compensation; but where, as in this case, the article is intended for consumption, interest upon the

value of it would seem to be the true compensation. If the owner of the grain should ask to obtain the like quantity, he must purchase in the market, at current rates, and he would be deprived of the use of the money thus invested. The best estimate of a loss that can be made is interest upon the amount of money which he would for that purpose be compelled to pay out." See, also, *Hanauer* v. *Bartels*, 2 Colo. 514, 525. The same rule ought to control the ascertainment of damages in actions for simple conversion of domestic animals intended for sale and consumption. The plaintiff receives adequate compensation when he is allowed damages equal to the value of the property at the time of conversion, with interest, at the established legal rate, from that date. He is entitled, as matter of law, to be compensated by the wrong doer to that extent.

Many other questions have been discussed by counsel, but we do not deem it important to refer to them. No substantial error of law appears to have been committed to the prejudice of the defendant, and *the judgment is affirmed.*

---

[56] THE COLLINS COMPANY, *Appt.*,
v.
LORING COES ET AL.

(See S. C. Reporter's ed. 56-69.)

Void patent—novelty of invention—disclaimer.

1. The complainant's patent is void for want of novelty.
2. The application to the bar of the Coes wrench, for the purpose of securing and supporting the step and resisting the strain, of a nut already in use for the same purpose on the Hewitt or Dixie wrench, lacks the novelty of invention requisite to support a patent.
3. A disclaimer cannot be used to change the character of the invention; if it requires an amended specification or supplemental description to make an altered claim intelligent or relevant, whilst it may possibly present a case for a surrender and reissue, it is clearly not adapted to a disclaimer.

[No. 164.]
Argued Jan. 10, 11, 1889. Decided March 5, 1889.

APPEAL from a decree of the Circuit Court of the United States for the District of Massachusetts, dismissing a suit for infringement of reissued letters patent No. 5294, dated February 25, 1873, for an improvement in wrenches. *Affirmed.*

See S. C. below, 21 Fed. Rep. 38.

Statement by *Mr. Chief Justice* **Fuller:**

[57] The Collins Company of Connecticut, a corporation located at Collinsville, in the County of Hartford and State of Connecticut, brought this suit in equity in the Circuit Court of the United States for the District of Massachusetts against Loring Coes and Melvin O. Whittier, partners in business at Worcester, in Worcester County, Massachusetts, in the name and style of Loring Coes & Company, for the alleged infringement of reissued letters patent No. 5294, dated February 25, 1873, for an improvement in wrenches, issued to the Collins Company as assignee of Lucius Jordan and Leander E. Smith, said reissued letters patent being based upon original letters patent dated October 10, 1865, No. 50,364. There had also been a reissue February 22, 1870.

The specification and accompanying drawings of the reissue No. 5294 are as follows:

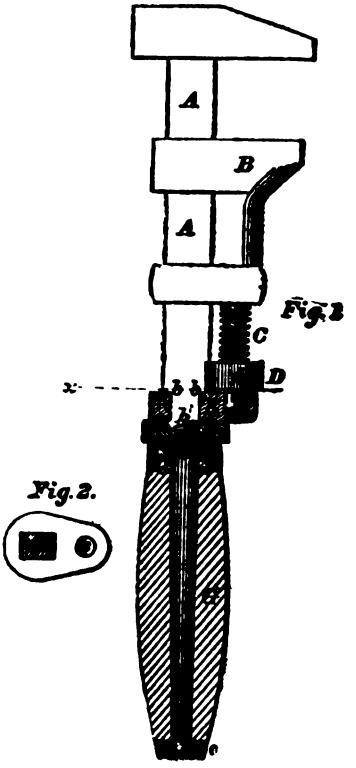

"The object of this invention is the prevention of end thrust or back pressure on the wooden handles of wrenches, which has heretofore availed to quickly destroy such wooden handles, and, in destroying the handles, has [58] left the working parts of the wrench which depended upon the handles for support without such support, so as to injure and effectually impair their working qualities and efficiency; and is accomplished by so connecting the step which so forms a bearing for the lower end of the screw-rod with the bar which forms the main part of the wrench that the back pressure upon the step by the screw-rod will be directly transmitted to the wrench-bar at the place of connection therewith, and will not be transmitted to and mainly put upon the wooden handle.

"Figure 1 is a side view of the whole wrench, the part below the dotted line *xx* being in section. Fig. 2 is a top or plan view of the step which forms a bearing for the lower end of the screw-rod.

"The letter A indicates the wrench-bar, flat side *d* down to the under side of the step E, and from thence downward cylindrical or of other convenient shape, so as to take upon it the wooden handle G. B is the movable jaw. The letter C indicates the screw-rod, and D the rosette by which it is turned. The letter

E indicates the step, in which is the bearing *s* for the lower end of the screw-rod, and also the hole *a* to admit the bar A, and fitting up against the shoulder *b*. On the bar A, just below the step E, is cut the screw thread *i*, on which screws the nut F, forming a projection from the wrench-bar, on which rests the step E, and thus transmits the back pressure put upon the step directly to the wrench-bar at the place [59] of connection therewith, and thus relieves the wooden handle therefrom; the connection of the step with the bar being made in such manner that the step may be removed or taken off the bar without any cutting or abrasion of parts.

"The nut not only supports the step, but can be made to rigidly fasten the step to the bar by screwing it firmly up against the step, so as to gripe it between itself and the shoulder *b*, thus giving the nut, so to speak, a double office, viz.: that of supporting the step, and also, that of fastening it rigidly to the bar. The nut is interiorly recessed at *d*, for the purpose of forming a ferrule for the top of the wooden handle.

"Heretofore the part designed to perform the office of the step E has rested directly on the wooden handle, which was secured upon the bar by a light nut, *o*, at the lower extremity of the bar, which is the present method of fastening on the handle.

"It is known that, previous to this invention, steps have been forged or otherwise produced solid with the bar, and this became as much a part of it as the solid head at extremity of bar, and also by riveting to reach similar result; but such method, by making a permanent fastening, renders it impossible, or a work of great difficulty, to displace the step in order to remove the sliding jaw for repairs. It will be observed that, while Jordan and Smith's method of fastening is as firm as the permanent fastenings last above referred to, their step can readily be removed and again put in place at pleasure.

"It is believed that Smith and Jordan were the first to secure easy divisibility of step and bar, together with a fixed or stationary step when in position, and at the same time supporting the step when in position immediately by the bar, and not immediately through the handle, as the manner had been.

"As a matter of definition, the Jordan and Smith method of fastening and supporting the step when in position is denominated 'removable' hereinafter in contradistinction from a connection and support made by forging or otherwise producing the step in one solid piece with the bar, and, therefore, a part of it, or by riveting it thereto, or the like.

[60] "*Claims.*

"1. The step, combined with the wrench-bar and supported by the nut F, or its equivalent, at the place where the step is connected with the bar, in such manner that the step can be removed from the bar without cutting or abrasion of parts.

"2. The nut F, combined with the wrench-bar, and interiorly recessed at *d*, for the purpose set forth.

"3. The nut F, combined with the threaded bar, and performing the office of supporting the step, and also of rigidly fastening it to the bar, for the purpose set forth."

April 16, 1841, a patent issued to Loring Coes for what has since always been known as the Coes wrench, and this was reissued June 26, 1849. The specification and drawings of the reissue are as follows:

"Figure 1 is an elevation of my improved wrench, and figure 2 an elevation of a wrench previously known but not of my invention.

"In my improved wrench the inner jaw slides on the bar of the permanent jaw and handle, and is moved by a screw at the side of the bar, operated by a head or rosette, which always remains in the same position relatively to the handle, whereby the movable jaw can be adjusted with the thumb of the hand, which grasps and holds the handle. The principle or character of my invention, and that which distinguishes it from all other things before known, consists in moving the adjustable jaw by means of a screw placed at the side of and parallel with the bar of the permanent jaw and handle, when the required rotation for sliding the jaw is given by a rosette or head, or the equivalent thereof, which retains the same position relatively to the handle; and my invention also consists in retaining the required position of the rosette or its equivalent, by which the required motion is given to the sliding jaw, by having its periphery to work in a notch or recess in the bar of the permanent jaw and handle, or *vice versa*.

"In the accompanying drawings (A) repre-

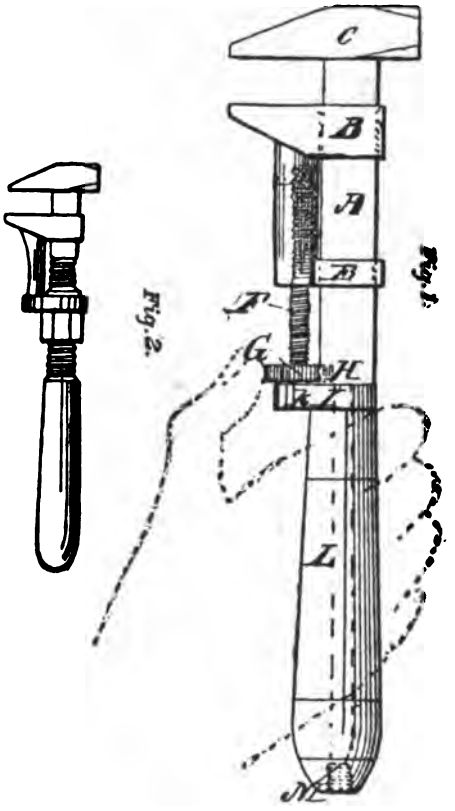

sents a quadrangular bar of metal with a per-

manent or hammer jaw (C) at one end, the other end being reduced in size to pass through
[61] a handle (L), secured to it by a nut (M). Between the ferrule of the handle and the shoulder of the bar an iron plate (I) griped by the securing of the handle onto the bar, and this plate extends out sufficiently beyond the bar to receive the journal (K) (see dotted lines) of a screw (F), which is placed parallel with and by the side of the bar. This screw is tapped into a tubular piece (D) that projects from the back face of the adjustable jaw (B), which is fitted to slide on the bar from or towards the permanent jaw (C), the rear end of the tubular projection (D) being provided with and sustained by a bridle (E), which embraces and slides on the bar. At the rear end the screw is provided with a head or rosette (G), the periphery of which turns in a notch or recess (H) made in the edge of the bar, as shown by dotted lines, by which the position of the said rosette is retained relatively to the handle. The hand, represented by dotted lines, indicates the manner in which my improved wrench is operated. The handle is grasped by the fingers, and the rosette is operated by the thumb of the same hand, so that, without any change in the position of the hand, the movable jaw can be moved towards or from the permanent jaw, to set the the wrench to any size required, with one hand.

"By means of my improvement the bar can be made of any desired form best adapted to
[62] the sliding jaw and to strength. The rosette or its equivalent employed for operating the jaw is always retained in the same position relatively to the hand that gripes the handle. At the same time, the use of two bearings for the screw is avoided.

"The advantages of my improved wrench over other methods of construction will be seen by comparison with the wrench represented by figure 2 of the accompanying drawings.

"What I claim as my invention and desire to secure by letters patent is moving the sliding jaw by a screw, combined with and placed by the side of and parallel with the bar of the permanent jaw and handle, substantially as described, when the required rotation for sliding the jaw is given by the head or rosette (or its equivalent), which retains the same position relatively to the handle during the operation, substantially as described. And I also claim moving the sliding jaw by a screw, combined with and placed by the side of and parallel with the bar of the permanent jaw and handle, substantially as described, in combination with the rosette or its equivalent, retained in its position relatively to the hand in the manner described."

It appears from the evidence that during the years 1851 to 1854, E. F. Dixie was manufacturing, to the extent of from two hundred to four hundred wrenches per week of various sizes, a wrench known as the Hewitt wrench, which wrench contained a recessed nut screwed upon the wrench-bar just above the wooden handle, for the purpose of relieving the handle from back pressure put upon the step, and of serving as a ferrule for the upper end of the wooden handle. It had an adjusting screw-sleeve instead of the adjusting screw-rod of the Coes wrench, but was otherwise substantially the same.

The following diagrams give the various wrenches referred to on the argument:

[63]

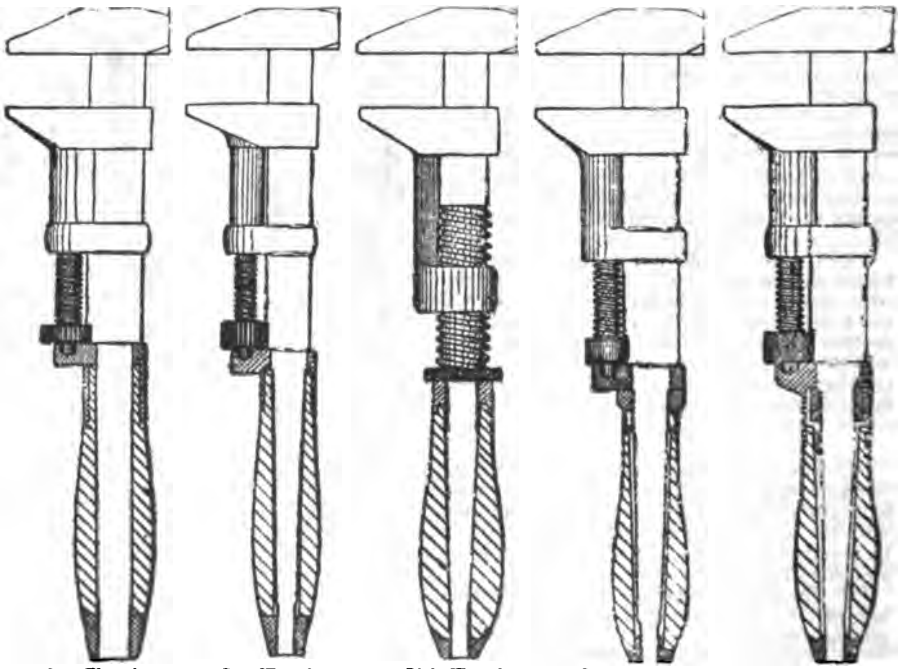

Coes Wrench Patented April 16, 1841. | Coes Wrench Original Manufacture, before and since 1850 | Dixie Wrench Manufactured 1851-1854. | Complainant's Patented Wrench. | Defendant's Manufacture Complained of.

[64] On the 9th of August, 1880, the Collins Company filed a disclaimer in the Patent Office, stating: "Further, that said The Collins Company has reason to believe that through inadvertence and mistake the second clause of claim made in said last mentioned reissued letters patent, in the following words, to wit: '2. The nut F, combined with the wrench-bar, and interiorly recessed at *d*, for the purpose set forth,' is too broad, including that of which said Jordan and Smith were not the first inventors. Said The Collins Company therefore hereby enters its disclaimer to 'the nut F, combined with the wrench-bar, and interiorly recessed at *d*, for the purpose set forth,' except when said recessed nut and wrench-bar are in combination with the handle (G), the step or step-plate (E), the screw-rod (C), and the movable jaw (B) of the wrench, substantially as is shown and described in said last mentioned reissued letters patent," being the reissue in question.

The defendants contend that the patent in suit did not disclose a patentable invention in view of the prior state of the art; that the reissue described and claimed a different invention from that for which the original patent was granted; that the reissue was taken too long after the date of the original patent to be permitted upon equitable grounds; and that there was no infringement.

The circuit court originally granted an interlocutory decree in favor of the plaintiff in accordance with the opinion of *Judge* Lowell, reported in 5 Bann. & Ard. 548, and 3 Fed. Rep. 225. But a rehearing was afterwards moved for and granted, the interlocutory decree, vacated and the bill dismissed, for the reasons, stated in the opinion of *Mr. Justice* Gray, presiding in the circuit, in a similar suit by the plaintiff against other defendants, which opinion was as follows:

"This is a bill in equity for the infringement of the first claim in the specification of the second reissue to the complainant, dated February 25, 1878, of letters patent originally issued to Lucius Jordan and Leander E. Smith, on October 10, 1865, for an improvement in wrenches.

"The wrench, as described, both in the original patent and in the reissue, has the following parts: [65] The wrench-bar A, the upper part of which is of the usual shape, and has attached to it the movable jaw B, and the lower part of which is of convenient form to receive upon it the wooden handle; a screw-rod, C, parallel to the main bar; a rosette, D, at the lower end of the screw-rod, by means of which the movable jaw is worked; a ferrule or step, E, having a hole through it for the admission of the bar, and a recess in its upper face as a bearing for the lower end of the screw-rod; a nut, F, screwed on a thread in the bar, under the step, and having a recess in its under face to receive the top of the wooden handle, G; and the wooden handle secured at its lower end to the main bar by a nut in the usual way.

"Both the original patent and the reissue state that the object of the invention is to make the strain come upon the nut F instead of coming upon the wooden handle. The original patent states that the nut F is, and the reissue states that it may be, screwed up firmly against the step E. The reissue affirms and repeats that the distinguishing characteristic of the invention is that the step can be readily removed and replaced at pleasure. There is no hint of such a distinction in the original patent.

"The first claim of the original patent is for 'The step E, made substantially as described, and for the purpose set forth.' The corresponding claim in the reissue is for 'The step, combined with the wrench-bar, and supported by the nut F, or its equivalent, at the place where the step is connected with the bar, in such manner that the step can be removed from the bar without cutting or abrasion of parts.'

"The parallel screw-rod, with a rosette thereon to work the movable jaw, and resting upon a ferrule or step, had been introduced in the original Coes wrench, patented in 1841; and, long before the issue of the patent to Jordan & Smith in 1865, large numbers of the Hewitt or Dixie wrench had been made and sold, in which there was no separate screw-rod, and the screw that worked the movable jaw revolved on the main bar, but that screw rested on a ferrule or step, which was secured sometimes by driving it on under heavy pressure and sometimes by a nut screwed under it on the bar.

"The application to the bar of the Coes [66] wrench, for the purpose of securing and supporting the step, and resisting the strain, of a nut already in use for the same purpose on the Hewitt or Dixie wrench lacks the novelty of invention requisite to support a patent within the decisions of the supreme court at the last term, which have in effect overruled the earlier decisions of this court in the suit of this complainant against Loring Coes and others, reported in 5 Bann. & Ard. 548. *Pa. R. Co.* v. *Locomotive Engine Safety Truck Co.* 110 U. S. 490 [28: 222]; *Bussey* v. *Excelsior Mfg. Co.* 110 U. S. 131 [28: 95]; *Double-Pointed Tack Co.* v. *Two Rivers Mfg. Co.* 109 U. S. 117 [27: 877]; *Phillips* v. *Detroit*, 111 U. S. 604 [28: 532].

"The complainant's patent being void for want of novelty, it becomes unnecessary to consider the other defenses.

"Bill dismissed with costs."

Mr. **Wm. Edgar Simonds,** for appellant: The reissue claim was valid.

Gold & Stock Teleg. Co. v. *Commercial Teleg. Co.* 23 Fed. Rep. 340.

The reissue claims were not unduly expanded.

Salades v. *Racine Wagon & C. Co.* 27 Pat. Off. Gaz. 1133; *Globe Nail Co.* v. *U. S. Horse Nail Co.* 19 Fed. Rep. 819; *Hicks* v. *Otto*, 19 Fed. Rep. 749; *McArthur* v. *Brooklyn Railway Supply Co.* 19 Fed. Rep. 263; *Dunbar* v. *White*, 15 Fed. Rep. 748; *Starrett* v. *Athol Machine Co.* 14 Fed. Rep. 910; *Holt* v. *Keeler*, 22 Pat. Off. Gaz. 1291; *Brainard* v. *Cramme*, 12 Fed. Rep. 621; *Eames* v. *Andrews*, 122 U. S. 40 (30: 1064).

The patent is *prima facie* evidence that the patentee was the original and first inventor.

Crouch v. *Speer*, 6 Pat. Off. Gaz. 188; *Hawes* v. *Antisdel*, 8 Pat. Off. Gaz. 685; *Wood* v. *Cleveland Rolling Mill Co.* 4 Fish. Pat. Cas. 559-60; *Parham* v. *Am. B. O. & Sewing Machine Co.* 4 Fish. Pat. Cas. 482; *Miller* v. *Smith*, 5 Fed. Rep. 364; *Woven Wire Mattress Co.* v. *Wire Web Bed Co.* 8 Fed. Rep. 89-90.

It required more than mere mechanical skill to produce what is shown in this patent.

Brown Mfg. Co. v. *Deere*, 21 Fed. Rep. 713; *Wooster* v. *Blake*, 8 Fed. Rep. 433; *Crandall* v. *Watters*, 9 Fed. Rep. 663-64; *Dederick* v. *Cassell*, 9 Fed. Rep. 309.

If a new combination and arrangement of known elements produce a new and beneficial result never attained before, it is invention.

Webster Loom Co. v. *Higgins*, 21 Pat. Off. Gaz. 2031.

Mr. **George L. Roberts**, for appellees:

The device lacks the novelty of invention requisite to support a patent.

Pa. R. Co. v. *Locomotive Engine Safety Truck Co.* 110 U. S. 490 (28: 222); *Bussey* v. *Excelsior Mfg. Co.* 110 U. S. 131 (28: 95); *Double Pointed Tack Co.* v. *Two Rivers Mfg. Co.* 109 U. S. 117 (27: 877); *Phillips* v. *Detroit*, 111 U. S. 604 (28: 532); *Morris* v. *McMillin*, 112 U. S. 244, 248, 249 (28: 702, 704); *Stephenson* v. *Brooklyn Crosstown R. Co.* 114 U. S. 149, 154, 156, 158 (29: 58, 61); *Pomace Holder Co.* v. *Ferguson*, 119 U. S. 335, 338 (30: 406, 408); *Thatcher Heating Co.* v. *Burtis*, 121 U. S. 286, 294, 295 (30: 942, 945); *Hendy* v. *Golden State & Miners Iron Works*, 127 U. S. 370, 375 (32: 207).

Mr. Chief Justice **Fuller** delivered the opinion of the court:

We concur with the circuit court in its disposition of this case and the grounds upon which it rested its decision.

The wrench-bar, the fixed jaw upon its upper end, the movable jaw sliding upon the wrench-bar, the screw-rod parallel with the wrench-bar, the rosette upon the lower end of the screw-rod, the step-plate surrounding the wrench-bar, the wooden handle secured by the nut at its extreme lower end, are all described in the patent to Coes; and the nut screwed upon the wrench-bar just below the step-plate, and provided with a recess for the purpose of forming a ferrule for the top of the wooden handle, which is not in the Coes patent, but is in complainant's reissue, had already been in use in the Hewitt or Dixie wrench for the same purposes. The disclaimer conceded that "the nut F, combined with the wrench-bar, and interiorly recessed at *d*, for the purpose set forth" was an old device; but it is claimed that the device is new when the recessed nut and wrench-bar are in combination with the handle, the step, the screw-rod, and the movable jaw. The handle, the step, the screw-rod, and the jaw are all to be found in the Coes and Dixie wrenches, and the recessed nut of the Dixie wrench constituted, by the shoulder which it made at its upper end, a step upon which the screw rested, and served every purpose designated in the reissued patent in suit as intended to be secured by such recessed nut. This in itself justified the finding that "The application to the bar of the Coes wrench, for the purpose of securing and supporting the step and resisting the strain, of a nut already in use, for the same purpose, on the Hewitt or Dixie wrench, lacks the novelty of invention requisite to support a patent." This conclusion is not affected by the fact that in complainant's wrench the screw-rod of the Coes wrench is availed of instead of the screw-sleeve of the Dixie wrench.

[67]

Complainant's first claim is as follows: "1. The step, combined with the wrench-bar and supported by the nut F, or its equivalent, at the place where the step is connected with the bar, in such manner that the step can be removed from the bar without cutting or abrasion of parts." The specification says: "On the bar A, just below the step E, is cut the screw thread *i*, on which screws the nut F, forming a projection from the wrench-bar, on which rests the step E, and thus transmits the back pressure put upon the step directly to the wrench-bar at the place of connection therewith, and thus relieves the wooden handle therefrom, the connection of the step with the bar being made in such manner that the step may be removed or taken off the bar without any cutting or abrasion of parts."

The elements of this combination are the support of the step by the nut F, the transmission of back pressure directly to the wrench-bar through that nut, and the removability of the step without cutting or abrasion of parts. Now the Dixie wrench contained the nut F, screwed on the wrench-bar, and transmitting the back pressure directly to it, and removable without cutting or abrasion, by being simply unscrewed.

The second claim is: "The nut F, combined with the wrench-bar, and interiorly recessed at *d*, for the purpose set forth." This, as so stated, was disclaimed, except when said recessed nut and wrench-bar are in combination with the handle, the step, the screw-rod, and the movable jaw. [68]

It was said in *Hailes* v. *Albany Stove Company*, 123 U. S. 582, 587 [31: 284, 286], the court speaking through *Mr. Justice* Bradley: "A disclaimer is usually and properly employed for the surrender of a separate claim in a patent, or some other distinct and separable matter, which can be exscinded without mutilating or changing what is left standing. Perhaps it may be used to limit a claim to a particular class of objects, or even to change the form of a claim which is too broad in its terms; but certainly it cannot be used to change the character of the invention. And if it requires an amended specification or supplemental description to make an altered claim intelligible or relevant, whilst it may possibly present a case for a surrender and reissue, it is clearly not adapted to a disclaimer."

The complainant's qualified disclaimer is an admission that the second claim of the patent is void for want of novelty, which is true, even if the qualification were effectual, since, as we have seen, the screw-rod and movable jaw of the patent have no different effect from the screw-sleeve and movable jaw of the prior Dixie wrench, upon the other parts of the combination.

The other claim is: "3. The nut F, combined with the threaded bar, and performing the office of supporting the step, and also of rigidly fastening it to the bar, for the purpose set forth." The specification says: "The nut not only supports the step, but can be made to rigidly fasten the step to the bar by screwing it firmly up against the step, so as to gripe it between itself and the shoulder *b*, thus giving the nut, so to speak, a double office,—viz.: that of supporting the step, and, also, that of fastening it rigidly to the bar. The nut is interiorly recessed at *d*, for the purpose of forming

a ferrule for the top of the wooden handle." The purpose of supporting the step by the nut F, and fastening the step rigidly to the wrench-bar by means of that nut, is the relief of the [69] wooden handle from the strain of back pressure. In the Dixie wrench the step and nut were made of one and the same piece of metal, thereby fully attaining the object of holding the step-plate rigidly fastened in position. In the Coes wrench the step was rigidly fastened to the bar by being griped between a shoulder above it and upon the bar and the handle below it, which was backed up by the nut screwed upon the lower extremity of the bar. Dispensing with a washer between a nut and that upon which it acts, makes no change in the office of the nut. The action of the nut M of the Coes wrench in griping the step-plate is the same as that of the nut F of the patent. This third claim is also void for want of novelty.

The decree of the Circuit Court is affirmed.

---

[87] TALLMADGE E. BROWN, *Appt.*,
v.
THE DISTRICT OF COLUMBIA.

(See S. C. Reporter's ed. 87-103.)

Patent for wood pavement—well known invention—patentable novelty—mechanical skill.

1. A wood pavement, composed of blocks, each side having a single plain surface and one or more of the sides being inclined and the blocks being so laid on their larger ends as to form wedge-shaped grooves or spaces to receive concrete or other suitable filling, was not, in view of the state of the art, patentable April 5, 1870.
2. The formation of wedge-shaped spaces to receive concrete or other filling by laying blocks with one or more inclined sides with their larger ends downwards the filling acting as a key, and the use of wooden blocks in that way, were well known at the time of the alleged invention under consideration.
3. As Cowing's combination simply embraces blocks of the same shape and material and similar filling applied in substantially the same way and producing substantially the same results as in the prior patents referred to in the opinion, it cannot be regarded as possessing patentable novelty.
4. To cut the block so as to get the grain in a particular way and so as to avoid waste, requires simple mechanical skill without involving invention.

[No. 137.]

Argued Jan. 8, 9, 1889. Decided March 11, 1889.

APPEAL from a decree of the Supreme Court of the District of Columbia, in a suit for the infringement of patent No. 101,590, issued to Turner Cowing April 5, 1870, for a new mode of constructing wood pavements in streets, and patent No. 94,062, issued to William W. Ballard and Buren B. Waddell August 24, 1869, for improvements in street pavements and patent No. 94,063, issued to said Ballard and Waddell August 24, 1869, for an improved mode of cutting blocks for street pavements; by which it was decreed that no case of actual infringement was made out as to No. 94,063, and that Nos. 94,062 and 101,590, were void for want of patentable novelty. *Affirmed.*

[88] Statement by *Mr. Chief Justice* **Fuller**:

Tallmadge E. Brown filed his bill in the Supreme Court of the District of Columbia on the 14th day of April, 1880, counting upon three patents alleged to have been infringed by the respondent, namely: Patent No. 101,590, issued to Turner Cowing, April 5, 1870, for "a new mode of constructing wood pavements for streets." The specification and claim are as follows:

"The nature of my invention consists in providing and arranging blocks of a peculiar shape in manner to form wedge-shaped crevices for the reception of earth or gravel, and wherein such earth or gravel will be retained to act as a key to bind and confine the blocks in their place.

"Figure 1 represents a section of road paved with the blocks, complete. Figure 2 represents the straight side of a block, with the inclined side at E. Fig. 3 represents the top of a block, and also the section of the base D. Fig. 4 represents the straight side of a block, which is set next to the inclined side of the adjoining block.

"In Fig. 1 letter A represents the top of the [89] block, B the side, and E the crevice and gravel. The blocks should, of course, be placed so that the gravel spaces may extend lengthwise across the direction of the street or road, so that, besides wedging and holding the blocks securely, they may furnish a better foothold for animals drawing heavy loads.

"In the drawing the front edge of the pavement, as shown, represents the side next the curb or a section parallel to the curb.

"It is obvious that the wedge-shaped crevices may also be formed by setting the above described blocks so that two vertical sides and two inclined sides come together alternately, as shown in Fig. 5; and it is equally obvious that two blocks having their vertical sides together may be replaced by a single block having two inclined faces, as shown in Fig. 6, without any material change of plan, and with a considerable saving of labor and expense in the construction.

"To construct my pavement, prepare the roadway by grading it to the proper form and ramming solid; then set the blocks as shown in Fig. 1, confining them permanently between the curbs of walks; then fill and ram the crevices with earth and gravel.

"I do not claim a wood pavement composed of wedge-shaped blocks, when the blocks are laid alternately on larger and smaller ends, so as to form a continuous surface of wood, but what I do claim, and desire to secure by letters patent of the United States, is:

"A wood pavement composed of blocks, each side having a single plain surface and one or more of the sides being inclined, and the blocks being so laid on their larger ends as to form wedge-shaped grooves or spaces to receive concrete or other suitable filling, substantially as set forth."

Patent No. 94,062, issued to William W. Ballard and Buren B. Waddell, August 24, 1869, for "improvements in street pavements," of which the following are the specification and claims:

"Figure 1 is a perspective view of a section of pavement embracing our improvement. Fig. 2, is a perspective view of a piece of tim- [90

ber from which the block is cut and showing the cuts made by the saw; and Fig. 3 is a perspective view of two of the blocks laid alongside of each other.

"To more clearly illustrate our invention we will proceed to describe the construction, etc., referring by letters to the drawings.

"A represents the bed of the street, which is made slightly arched, the ends of the arch resting against the curbs B B. Strips C are laid upon said arch at right angles to the curb and at convenient distances apart. Upon said strips is laid a flooring, composed of boards of any desired dimensions, and the blocks are then laid on this flooring in rows, and so as to break joints. These blocks are of a wedge shape, and are so laid as that their bases shall touch, forming a continuous arch across the street, and leaving V-shaped spaces between the rows. These spaces are filled with concrete or its equivalent, and the whole surface tarred over, if thought necessary. The gutters are formed by inclining the bed slightly upward at the curb and splitting the ends of the blocks off to fit against the curb and the last one of the street blocks.

"The peculiarity of the blocks used in this pavement is that they are wedge-shaped and having both sides at acute angles with the base and the grain running parallel with one and oblique to the other of these sides.

"A more perfect description of these blocks and the manner of producing them is given in another pending application, now on file in the United States Patent Office, entitled 'A method of cutting blocks for street pavements,' prepared and executed by us on the 29th day of September, 1868.

"The advantages of blocks having both sides beveled, with the grain running, as described, over the ordinary wedge-shaped block, are first and most important—that only one corner of the base is at all likely to become broken off by transportation and rough handling; whereas, in the ordinary block both corners are liable to such accidents. Another advantage of the relation of grain to the sides of the block is that the V-shaped spaces have one perfectly smooth side, and consequently less opportunity is afforded to the gravel in the filling to jam and leave the lower portion of the space loosely or entirely unfilled. This is believed to be a difficulty in pavements constructed of wedge-shaped blocks having the grain running vertically, and thereby exposing the fiber on both the beveled sides of the blocks.

[91]

"A pavement constructed of our improved blocks can be laid at a less cost than any other wedge-shaped pavement, owing to the cheapness of the blocks.

"It has always been desirable to build pavements of wedge-shaped blocks, as they make a stronger and more durable pavement and are more easily laid, but so far it has been impracticable owing to the expense of producing the blocks caused by the waste in material and extra sawing.

"Having described the construction and advantage of our improved pavement, what we claim as new and desire to secure by letters patent is—

"1 As an article of manufacture, wedge-shaped blocks having the grain running parallel to one and oblique to the other of their beveled sides, and produced substantially in the manner referred to.

"2. A wooden street pavement constructed, substantially as hereinbefore described, of wedge shaped blocks with the grain running and produced in the manner and for the purpose set forth."

Patent No. 94,063, issued to said Ballard and Waddell, August 24, 1869, for "an improved mode of cutting blocks for street pavement," of which the specification and claim are as follows:

"Figure 1 represents the lumber as the blocks are being cut off in order to give the ends of the blocks the proper angle or bevel.

"Fig. 2 represents the blocks after being cut off as above described before splitting. Fig. 3 represents the blocks in the act of being split on a saw table, showing the rest or guide necessary to cut them in the proper direction. Fig. 4 represents the blocks finished and placed in the pavement.

"Our invention consists in a novel method of cutting and splitting blocks for wood pavement in such a manner that two cuts, or rather one cut and one splitting, will produce two finished blocks with level top and bottom and two sides beveled, one being with the grain and the other slightly oblique to the grain, without more waste of timber than is occasioned by the saws.

[92]

"We take a piece of lumber four and a half feet long, twelve inches wide, and seven inches thick. This is placed under the saws, as shown in Fig. 1, in an inclined position, so that the first cut will produce blocks with two sides inclined, the top and bottom level or in parallel planes. The first cut produces nine blocks, such as shown in Fig. 2, out of a piece of lumber, as described above. Each such block will then be twelve inches long, six inches high with the fiber, and seven inches wide across the fiber. These blocks are then split, as indicated in dotted lines, Fig. 2, slightly oblique to the fiber, as seen also in Fig. 3, being brought toward the splitting saw in an inclined position, inclined in contradistinction to a position level at top and bottom, in such a manner that the line of the cut will form the other two beveled sides of two blocks, each of which has the top and bottom level, or in parallel planes, and the sides beveled as shown in Fig. 4, and, moreover, has the grain running in the direction of one of the beveled sides, as clearly shown in Figs. 2 and 3. These blocks will then be twelve inches long, six inches high, three inches wide at top, and four inches wide at the base.

"The figures of feet and inches we have, of course, used only as an illustration, as different dimensions of lumber may be used, but those given will do for an ordinary street block.

"The two great advantages of this method are economy of lumber and of labor and time, the only loss of lumber being the small pieces cut off at each end to start the bevel. Each two cuts, or rather one cut and one splitting, produces two complete blocks ready for use.

"Having thus described our invention, what we desire to secure by letters patent is—

"The herein described method of cutting blocks for wooden pavement, so as to form by

two cuts, or one cut and one splitting, two finished blocks with top and bottom level, or [93] in parallel planes, and the sides beveled, one side being inclined with the fiber, and without waste of material, substantially as set forth."

The defendant pleaded the Statute of Limitations, whereupon the complainant amended, and the defendant subsequently demurred, and, the demurrer being overruled, the defendant, after interposing another plea of want of notice, answered, denying that it had, in any way, violated the rights of the complainant, and, among other things, averring that all the substantial claims of complainant's alleged patents were covered by previous patents granted to Nicolson, De Golyer, Miller and Mason, Stone, Cranford, and others; and that wooden pavements, in all substantial particulars identical with those claimed by complainant, had been laid and used for more than two years before the patents were applied for, in Chicago, New York, Boston, etc., and that the alleged patents are null and void because the alleged invention is neither new nor useful.

Replication was filed and proofs taken. It appeared that patent No. 101,590 was originally granted to Cowing, whose first application was made in November, 1865, and rejected December 27 of that year, whereupon it was amended and renewed in 1869, but the decision was that the application had been abandoned. It was afterwards entertained, and was twice amended in 1870, and the patent was finally issued April 5, 1870. In the original application Cowing said, as in the patent as issued:

"The nature of my invention consists in providing and arranging blocks of a peculiar shape in manner to form wedge-shaped crevices for the reception of earth or gravel, and wherein such earth or gravel will be retained to act as a key to bind and confine the blocks in their place."

The amended claim of May, 1869, was:

"The above described wood pavement, constructed of rectangular blocks, having each a wedge-shaped piece cut from one of its four vertical sides to form a corresponding space for filling, and placed and filled in, substantially as set forth."

The amended claims of February 22, 1870, were:

[94] "1st. A wood pavement consisting of blocks having one or more inclined sides, forming between them wedge-shaped spaces or crevices, which are filled with earth, gravel, or other suitable material, substantially as herein described. 2d. In wood pavement, wedge-shaped spaces or crevices for the reception of earth, gravel, or other filling to act as a key to bind and confine the blocks in their places substantially as described. 3d. A wood pavement block having one or more oblique or inclined sides, so as to form, when set, wedge-shaped spaces or crevices to receive earth, gravel, or other filling, substantially as set forth. 4th. In wood pavement, in combinations with wedge-shaped crevices above, formed by the peculiar shape of the blocks, for receiving gravel or other filling, a continuous base beneath, formed by the complete fitting together of the same blocks at the bottom, substantially as specified."

On the 31st of March, 1868, a patent was issued to Miller and Mason, of Chicago, Illinois, for "certain new and useful improvements in wood pavements," in which the claim is—

"A pavement constructed of wedge-shaped blocks A, when laid so as to break joints with those of the opposite rows, in combination with a concrete filling, and in further combination with a continuous wood foundation and so laid as to form continuous rows across the street."

It is said in the specification of that patent:

"The blocks A are to be cut from plank, and are of the usual size, having the fiber vertical. The blocks of our pavement, however, differ from all other blocks in use for pavements, in having both sides beveled from top to bottom, as shown by the end view of the blocks in the drawings. The blocks thus prepared are placed in the board or plank foundation B in transverse rows. Each block may be secured to the foundation by a nail or spike as shown at *a*. It will be observed that in consequence of the peculiar shape of the blocks those in the several rows touch each other at the bottom, but are some distance apart at the top, forming between the rows wedge-shaped channels. These channels are to be filled with concrete, or gravel and coal tar, or other suitable substance, furnishing the necessary foot hold for horses.

* * * * * * [95]

"The blocks can be cut with less waste of material by cutting them from timber, and splitting the timber blocks with the proper bevel. This makes a strong pavement, and as the blocks have a broad base they will not cut or break the foundation when very heavily-loaded teams are driven over it."

August 20, 1867, letters patent were reissued to Samuel Nicolson, of Boston, for "a new and useful improved wooden pavement," the original letters having been issued August 8, 1854, and new letters issued dated December 1, 1863. The claims of the second reissue are:

"1. Placing a continuous foundation or support, as above described, directly upon the roadway, then arranging thereon a series of blocks, having parallel sides, endwise in rows, so as to leave a continuous narrow groove or channel-way between each row, and then filling said grooves or channel-ways with broken stone, gravel and tar, or other like materials. 2. The formation of a pavement by laying a foundation directly upon the roadway, substantially as described, and then employing two sets of blocks; one, a principal set of blocks that shall form the wooden surface of the pavement when completed, and an auxiliary set of blocks or strips of board which shall form no part of the surface of the pavement, but determine the width of the groove between the principal blocks, and also the filling of said groove, when so formed, between the principal blocks, with broken stone, gravel and tar, or other like material. 3. Placing a continuous foundation or support, as above described, directly upon the roadway, and then arranging thereon a series of blocks having parallel sides endwise in a checkered manner, so as to leave a series of checkered

spaces or cavities between said blocks and then filling said checkered cavities with broken stone, gravel and tar, or other like material. 4. The formation of a pavement by laying a foundation directly upon the roadway, substantially as above described, and then employing two sets of blocks, viz.: one a principal set of blocks that shall form the wooden surface of the pavement and an auxiliary set of blocks that shall form no part of the wooden surface of the pavement, but determine the dimensions [96] of the tessellated cavities between the principal blocks, and then filling said tessellated cavities with broken stone, gravel and tar, or other like material."

February 28, 1824, English letters patent were granted to A. H. Chambers for "improvements in preparing and paving horse and carriage ways," in which the nature of the invention is said to—

"Consist in an arrangement of conical-formed stones or other hard mineral or silicious substances of the said form, placed on their natural bases, cemented together at their lower extremities, and having their remaining interstices filled with loose materials insoluble in water."

He describes pyramidal stones, "cut in the form represented in the drawing, and placed with their large end or natural base downward," to be grouted at their bases by a good strong cement; the upper part of the interstices that will then be left vacant to be filled "with finely broken flints, patent English pozzolana powdered, or any other similar substance, not soluble in water."

"Fig. 3 represents the stones in that form which I consider the best calculated to effect the required resistance to downward pressure, the size of which should be eight inches square at the apex, twelve inches square at the base, and ten inches high."

He explains that while stones of the shape described are the best adapted for the purpose of the pavement or carriage way, yet to save expense use may be made for all ordinary pavements of stones as usually prepared for paviours, but taking care "always to lay their natural bases or largest end downwards, which is the exact reverse of the mode adopted by paviours;" "the upper part of the intermediate spaces or interstices aforesaid filled with powdered or finely broken matter, not soluble in water, as aforesaid."

June 14, 1825, English letters patent were granted to John Lindsay for "certain improvements in the construction or formation of the horse and carriage ways of streets, turnpike, and other roads, and an improvement or addition to wheels to be used thereon."

[97] He says, referring to a pavement "with the common or usual sized paving stones," that —

"The method of arranging or laying them is as follows: Instead of laying them with their broadest ends upwards, I lay them with the broadest ends downwards, and, as each stone is made of a wedge form, this leaves a considerable space open between the stones. These I close with smaller stones of a wedge form, which, being carefully placed and well rammed down, after a sufficient quantity of fine gravel or grout has been worked between them, will make a pavement nearly as substantial as a solid sheet of granite."

In 1839, English letters patent were issued to Richard Hodgson for "improvements in the forms or shapes of materials and substances used for building and paving and in their combinations for such purposes," in which he describes an invention consisting in forming and shaping materials and substances according to a new section of the cube obtained by dividing the cube into eight equal prisms or parts, etc., the shapes and forms described, with their combinations, being "applicable generally to materials and substances employed in building and paving, whether of stone, iron, bricks, or wood." The shapes in the case of stone, marble, etc., are "to be formed by sawing or cutting the same out of the full size of the cube and leaving them entire in their relative dimensions, so as to be ready to be placed together either horizontally, vertically, or obliquely, as the case may require," while for "wood paving a peculiar disposition of the materials or blocks thus shaped, and, if necessary, pegged or dowelled, will be required," etc. The blocks may be packed up together in the workshop in masses, so as to be laid down more speedily on the ground, where they must be fastened together with pegs or with any bituminous compound usually employed for similar purposes. They must be placed nearly vertically, as the tree grows, and according to the traffic the depth or substance of the wood pavement must be increased or diminished. They may in most cases be laid across the street from side to side, but, when necessary, in a diagonal line.

Defendant introduced various letters patent, [98] to wit: For improvement in "the machine for resawing boards and other timber" (issued to Crosby, 1841); for "improvements in saw mills, for curved and bevel sawing, but which may also be used for rectilinear sawing" (issued to Normand, 1854); for "a new and improved mode of sawing stone or marble into tapering and other forms" (issued to McBird, 1856); for "an adjustable table for reciprocating saws," "whereby the proper bevel may be imparted to the ribs of vessels and other objects with accuracy and facility" (issued to Hinchman, 1863); for "improvement in the manufacture of siding" (issued to Millengar, 1864); for "an improved saw mill," "so as to cut ship timbers and other irregular forms" (issued to Wright & Molyneux, 1865); and also extracts from a volume entitled "Turning and Mechanical Manipulation," by Charles Holtzapffel, London, 1847.

These extracts treat of cutting, by means of guides, rectangular pieces from the end of a long bar, and rhomboidal pieces of any angle and magnitude; the sawing of small pieces into regular and irregular polygons of any particular angles and numbers of sides; the cutting of miters, etc.; the sawing beveled edges and oblique prisms or those in which the angular variations are in the vertical plane, rhomboids, or squares.

"When the pieces are parallel in one direction and beveled in the other, they may be cut out without any waste beyond that arising from the passage of the saw."

Figure 743 shows a method of cutting blocks

at one cut for each piece, into rhombuses, which are shown separately at *a*, which blocks can be afterwards divided into two, so as to make triangular shaped blocks such as are shown at *c*.

At the hearing in special term the bill was dismissed, and the decree being affirmed in general term, the complainant has prosecuted his appeal to this court.

The opinion of *Judge* Cox at special term was adopted by the court in general term (Cartter, *C. J.*, Hagner and James, *JJ.*), and from it it appears that it was held that no case of actionable infringement was made out as to No. 94,063, and that Nos. 94,062 and 101,590 were void for want of patentable novelty. *Brown* v. *District of Columbia*, 3 Mackey, 502.

Messrs. **A. S. Worthington** and **C. C. Cole**, for appellant:

Local statutes of limitation do not apply to suits brought to recover damages for the infringement of letters patent of the United States.

Parker v. *Hallock*, 2 Fish. Pat. Cas. 543, note; *Collins* v. *Peebles*, 2 Fish. Pat. Cas. 541; *Read* v. *Miller*, 2 Biss. 12; *Wood* v. *Cleveland Rolling Mill Co.* 4 Fish. Pat. Cas. 550; *Wetherill* v. *N. J. Zinc Co.* 1 Bann. & Ard. 105; *Anthony* v. *Carroll*, 2 Bann. & Ard. 195; *Sayles* v. *Lake Shore & M. S. R. Co.* 9 Fed. Rep. 515, note; *Sayles* v. *Dubuque & S. C. R. Co.* 9 Fed. Rep. 516; *Hayward* v. *St. Louis*, 11 Fed. Rep. 427; *May* v. *Fond du Lac Co.* 27 Fed. Rep. 691; *May* v. *Logan Co.* 30 Fed. Rep. 250; *May* v. *Ralls Co.* 31 Fed. Rep. 473.

The statute governing this subject, section 55 of the Act of July 8, 1870 (16 Stat. at L. 206), provides that all actions shall be brought during the term for which the letters patent shall be granted or extended, or within six years after the expiration thereof.

Ballard v. *Pittsburgh*, 12 Fed. Rep. 783; *Vaughan* v. *East Tenn., V. & G. R. Co.* 11 Pat. Off. Gaz. 789.

The patents themselves are notice to everybody.

Boyden v. *Burke*, 55 U. S. 14 How. 575 (14: 548).

The only difference between an infringer who is such innocently and a malicious infringer is in the measure of damages.

Emerson v. *Simm*, 6 Fish. Pat. Cas. 285; *Nat. Car-Brake Shoe Co.* v. *Terre Haute Car & Mfg. Co.* 19 Fed. Rep. 514; *New York Pharmical Asso.* v. *Tilden*, 14 Fed. Rep. 740; Walker, Pat. 569.

The answer admits the infringement.

Agawam Woolen Co. v. *Jordan*, 74 U. S. 7 Wall. 583 (19: 177); *Gear* v. *Fitch*, 3 Bann. & Ard. 573.

The District of Columbia is liable for the acts of the board of public works.

Barnes v. *Dist. Col.* 91 U. S. 540 (23: 440); *Neuchatel Paving Co.* v. *Dist. Col.* 17 Ct. Cl. 396; *Donovan* v. *U. S.* 21 Ct. Cl. 122; *Cluss* v. *Dist. Col.* 2 MacAr. 493; *Roderick* v. *Dist. Col.* 3 MacAr. 595; *Dist. Col.* v. *Washington Gaslight Co.* 3 Mackey, 347, 348.

The answer does not aver that this invention had been abandoned. This defense must be specifically set up.

Providence Rubber Co. v. *Goodyear*, 76 U. S. 9 Wall. 793-801 (19: 567-570).

If the defense had been set up, the evidence would not support the averment.

Cochrane's Case, Comrs. Dec. 1869; *Smith* v. *Goodyear D. V. Co.* 93 U. S. 496 (23: 954); *Woodbury Planing Mach. Co.* v. *Keith*, 101 U. S. 488 (25: 942); *U. S. Rifle & Cartridge Co.* v. *Whitney Arms Co.* 118 U. S. 22 (30: 53); *Ballard* v. *Pittsburgh*, 12 Fed. Rep. 783.

The claim that Cowing's patent is invalid because the amendment made in 1870 included matters not covered by the original application, is one not set up in the answer.

Walker, Pat. 440, 450, 603; *Providence Rubber Co.* v. *Goodyear*, 76 U. S. 9 Wall. 793 (19: 567).

A patentee is entitled to the benefit of a new result which follows from the invention described in his specification, whether he perceives it or not.

Tucker v. *Spalding*, 80 U. S. 13 Wall. 453 (20:515); *Stow* v. *Chicago*, 104 U. S. 550 (26:817); *Woodman* v. *Stimpson*, 3 Fish. Pat. Cas. 98; *Graham* v. *Mason*, 5 Fish. Pat. Cas. 1; *Dalton* v. *Nelson*, 13 Blatchf. 357.

Cowing's combination is new.

Elizabeth v. *Nicholson Pavement Co.* 97 U. S. 126 (24: 1000); *Webster Loom Co.* v. *Higgins*, 105 U. S. 591 (26: 1181); *Wicke* v. *Ostrum*, 103 U. S. 461 (26: 409); *Phillips* v. *Detroit*, 111 U. S. 606 (28: 533).

Each patent covers only the device described in the specification thereof.

McCormick v. *Talcott*, 61 U. S. 20 How. 402 (15: 930); *Bridge* v. *Excelsior Mfg. Co.* 105 U. S. 618 (26:1190); *Duff* v. *Sterling Pump Co.* 107 U. S. 636 (27:517); *Blake* v. *San Francisco*, 113 U. S. 679 (28: 1070); *Cantrell* v. *Wallick*, 117 U. S. 694 (29: 1018).

The doctrine that a patent for a combination includes an equivalent of any particular part of the combination is confined to cases in which the equivalent was known at the time of the invention patented.

Gould v. *Rees*, 82 U. S. 15 Wall. 187 (21: 39); *Gill* v. *Wells*, 89 U. S. 22 Wall. 1 (22: 699); *Rowell* v. *Linsay*, 113 U. S. 97 (28: 906).

The patent is *prima facie* evidence of the utility of the invention which it covers.

Lehnbeuter v. *Holthaus*, 105 U. S. 94 (26: 939).

And the fact that the defendant has used the invention is sufficient to establish the utility of the thing patented as against it.

Whitney v. *Mowry*, 4 Fish. Pat. Cas. 207.

Specifications in an application for a patent may be amended by adding new specifications and new claims involved in the original specifications, models and drawings, and a patent may issue for all, having effect from the date of first application.

Singer v. *Braunsdorf*, 7 Blatchf. 521-530; *Winans* v. *Denmead*, 56 U. S. 15 How. 330-343 (14: 717); *Godfrey* v. *Eames*, 68 U. S. 1 Wall. 317-324 (17: 684. 685); *Seymour* v. *Osborne*, 78 U. S. 11 Wall. 516-560 (20: 33-44); *Smith* v. *Goodyear D. V. Co.* 93 U. S. 486-489 (23: 952); *Dunbar* v. *Myers*, 94 U. S. 187-195 (24: 34-37); *Union Paper Bag Machine Co.* v. *Murphy*, 97 U. S. 120-125 (24: 935, 936); *Elizabeth* v. *Nicholson Pavement Co.* 97 U. S. 126 (24: 1000).

Where a patent has been granted, it relates back to and takes effect from, the date of the first application, and avoids intermediate patents.

Johnsen v. *Fassman*, 1 Woods, 138-142; *Rich*

v. *Lippincott*, 2 Fish. Pat. Cas. 1-9; *Dental Vulcanite Co.* v. *Wetherbee*, 3 Fish. Pat. Cas. 87-97; *Blandy* v. *Griffith*, 3 Fish. Pat. Cas. 609-617; *McMillin* v. *Barclay*, 5 Fish. Pat. Cas. 189-199; *Henry* v. *Francestown Soap-Stone Stove Co.* 9 Pat. Off. Gaz. 408; *Ballard* v. *Pittsburgh*, 12 Fed. Rep. 783.

The patent itself makes a *prima facie* case in favor of the patentee that he was the first inventor.

Curtis, Pat. § 472; *Phila. & T. R. Co.* v. *Stimpson*, 39 U. S. 14 Pet. 449-458 (10: 535); *Roberts* v. *Dickey*, 4 Fish. Pat. Cas. 532-541; *McComb* v. *Ernest*, 1 Woods, 195-203.

The party asserting a prior use of a claimed invention has the burden of proof on him, and must show such use beyond any reasonable or fair doubt.

Coffin v. *Ogden*, 85 U. S. 18 Wall. 120-124 (21: 821-823); *Howe* v. *Underwood*, 1 Fish. Pat. Cas. 160-175; *Goodyear* v. *Day*, 2 Wall. Jr. 283-299; *Hayden* v. *Suffolk Mfg. Co.* 4 Fish. Pat. Cas. 86-104; *Webster Loom Co.* v. *Higgins*, 16 Pat. Off. Gaz. 675-678; *Washburn* v. *Haish*, 4 Fed. Rep. 900-904.

Mr. **Henry E. Davis,** for appellee:

The use of wood instead of stone is a mere substitution of materials, and so not patentable.

Hotchkiss v. *Greenwood*, 1 Whit. Pat. Cas. 610; 52 U. S. 11 How. 248 (13: 683); *Hicks* v. *Kelsey*, 2 Whit. Pat. Cas. 475; 85 U. S. 18 Wall. 670 (21: 852); *Reckendorfer* v. *Faber*, 92 U. S. 347 (23: 719); Curtis, Pat. §§ 51, 52 and cases cited; *Phillips* v. *Detroit*, 17 Pat. Off. Gaz. 191.

The substitution of one known means for another is not patentable.

Curtis, Pat. § 49; *Bean* v. *Smallwood*, 2 Story, 408; *Couse* v. *Johnson*, 16 Pat. Off. Gaz. 719.

The patent is clearly invalid.

Draper v. *Hudson*, 6 Fish. Pat. Cas. 327; 3 Pat. Off. Gaz. 355; *Milligan & H. Glue Co.* v. *Upton*, 1 Bann. & Ard. 498; 6 Pat. Off. Gaz. 837; 97 U. S. 3 (24: 985); *McCloskey* v. *Du Bois*, 19 Pat. Off. Gaz. 1286.

Exhibit No. 11, showing the state of the art, is clearly admissible.

Brown v. *Piper*, 91 U. S. 37 (23: 200); 10 Pat. Off. Gaz. 417; *Westlake* v. *Cartter*, 6 Fish. Pat. Cas. 519; 4 Pat. Off. Gaz. 636.

The expedient for economizing material plainly lacks the elements of a patentable invention.

Snow v. *Taylor*, 14 Pat. Off. Gaz. 861.

The applicant enlarged his claim to cover structures for which patents in the interim had issued to other parties, and to embrace an invention different from his original application.

Chicago & N. W. R. Co. v. *Sayles*, 15 Pat. Off. Gaz. 243; 97 U. S. 554 (24: 1053).

Where a known manufacture or product is in the market, purchasers are not bound to inquire whether it was made on a patented machine or by a patented process.

Goodyear v. *N. J. Cent. R. Co.* 1 Fish. Pat. Cas. 626; *Boyd* v. *McAlpin*, 3 McLean, 427; *Boyd* v. *Brown*, 3 McLean, 295.

Mr. Chief Justice **Fuller** delivered the opinion of the court:

[99] Was a wood pavement "composed of blocks, each side having a single plain surface and one or more of the sides being inclined, and the blocks being so laid on their larger ends as to form wedge-shaped grooves or spaces to receive concrete or other suitable filling," patentable April 5, 1870, in view of the state of the art?

Chambers had, in 1824, described a pavement of pyramidal stones, twelve inches square at the base, eight inches square at the apex, and ten inches high, placed with their larger end downward, and the interstices filled with loose materials insoluble in water.

Lindsay's invention, in 1825, comprised stones made of a wedge-shaped form, laid with their broadest ends downwards, leaving a considerable space between them to be closed with smaller wedge-formed stones, with fine gravel or grout worked between them.

Nicolson's pavement was composed of blocks of wood laid in rows across the street, with spaces obtained by interposing narrow wooden strips between the blocks, to be filled with concrete or other suitable filling.

Cowing disclaimed "a wood pavement composed of wedge-shaped blocks when the blocks are laid alternately on larger and smaller ends, so as to form a continuous surface of wood," but claimed the arrangement of the blocks so as to leave wedge-shaped spaces to receive filling to act as a key to bind the blocks together. But reference to these prior patents clearly shows that the formation of wedge-shaped spaces to receive concrete or other filling by laying blocks with one or more inclined sides with their larger ends downwards, the the filling acting as a key, and the use of wooden blocks in that way, were well known at the time of the alleged invention under consideration.

The blocks of the Lindsay patent are of the same shape as those of Cowing, but are of stone, while the latter are of wood, but this was nothing more than the substitution of one material [100] for another without involving a new mode of construction, or developing anything substantially new in the resulting pavement. *Hotchkiss* v. *Greenwood*, 52 U. S. 11 How. 248 [13: 683]; *Hicks* v. *Kelsey*, 85 U. S. 18 Wall. 670 [21: 852]; *Smith* v. *Goodyear Dental Vulcanite Co.* 93 U. S. 486 [23: 952]; *Phillips* v. *Detroit*, 111 U. S. 604 [28: 532].

The filling under Lindsay's patent was with small stones, fine gravel, or grout, while Cowing names a filling of earth, gravel, or some other similar substance, but Nicolson used broken stone, gravel and tar, or other like material, being the same filling for the same purpose and with substantially the same result, while the material of the Nicolson block was the same as that of Cowing.

It is argued that gravel and similar substances cannot be forced into the stone blocks of the Chambers and Lindsay patents, and that in ramming gravel between wooden blocks it of necessity indents the blocks, and the filling must adhere much more firmly than would be the case if they were stone. There is nothing said about this by Cowing in his specification, but he is entitled, if this is an advantage directly following from the alleged invention as described, to the benefit of it, whether he perceived it or not. *Stow* v. *Chicago*, 104 U. S. 547, 550 [26: 816, 817]. The same effect, however,

would be obtained in ramming filling between the blocks of any wooden pavement, and the same liability of the filling "to extend laterally into the fiber of the wood and seat itself therein" is found in the Nicolson pavement.

In the Chambers patent the blocks had four inclined sides, which would make the filled space run lengthwise as well as crosswise. In the Cowing patent the crevices run lengthwise "across the direction of the street or road."

As Cowing's combination simply embraces blocks of the same shape and material, and similar filling, applied in substantially the same way and producing substantially the same results as in the prior patents referred to, it cannot be regarded as possessing patentable novelty.

The first claim of patent No. 94,062 covers, as an article of manufacture, "wedge-shaped [101] blocks having the grain running parallel to one and oblique to the other of their beveled sides, and produced substantially in the manner referred to."

The second is "a wooden street pavement constructed, substantially as hereinbefore described, of wedge-shaped blocks with the grain running and produced in the manner and for the purposes set forth."

The original application of Ballard was filed June 15, 1869, and rejected by Examiner Spear upon the ground that the claim was essentially the same as that in No. 94,063, which was for a mode of cutting blocks. It was then amended and again rejected, the examiner saying: "It is admitted that there is no difference between the blocks of applicant and those of Miller and Mason in configuration, nor is any difference claimed of functions. These blocks and those of the patent referred to, once laid, would be indistinguishable, serving, under the same conditions, precisely the same purposes and wearing equally as long. The difference lies in the mode of cutting, by which not a different block is produced, but the same block is cut with a minimum of waste of material." From this decision an appeal was taken to the examiners in chief, who affirmed the ruling, holding that "The trouble with the present application appears to be that the specification and claim merely set forth and embrace a paving block and the use thereof, having a certain form and being so cut that the grain will run in certain angles with the sides, or parallel thereto, and without any reference to the mode and manner of manufacturing. Blocks having all the peculiarities set forth may be manufactured without resorting to the method by which it seems the ones described in the application were made; and it does not follow, therefore, that the block described and claimed is the new article of manufacture produced by the new invention, nor is it at all material whether the grain runs as set forth or the blocks have the precise form described. Therefore these peculiarities are not the patentable features of the invention; they merely result from the invention."

The application was then renewed by Ballard & Waddell with the result before us, but it is plain that the patent was granted for novelty in the method of making the block and [102] not in the block itself, nor in a wooden street pavement so constructed. It is not denied that the Ballard block is identical in shape with those set forth in the Cowing, Chambers, Lindsay, and Miller and Mason patents, but it is claimed that a difference exists between it and that of Miller, and Mason in the arrangement of the grain, namely, running parallel with one and oblique to the other of its beveled sides.

We can discover nothing materially different in the practical result of having the grain run in this way, and no material difference is disclosed by the evidence.

The specification asserts that the gravel in the filling is not so liable to jam and leave the lower portion of the space loosely or entirely unfilled, where the blocks have one perfectly smooth side, and that "Only one corner of the base is at all likely to become broken off by transportation and rough handling; whereas, in the ordinary block both corners are liable to such accidents;" but, as appears from the evidence, "If the blocks are cut with the grain in the manner described in said patent, although one side is not so likely to break off as the other, yet the side that has the grain oblique to it is twice as likely to be broken off as the blocks made in the ordinary way, that is, with the grain vertical;" and "The effect of the smooth side of one block, if there were such an alleged advantage in said side, would be fully recompensed by the additional roughness of the other side;" and it would seem that the durability of the block is less where the grain is inclined than where it is vertical. It is fully shown in an elaborate report upon wood paving, quoted from in the evidence, and which, it is testified, agrees with general experience, that vertical fiber blocks have far greater power of resistance than blocks with fibers horizontal, and with fibers at various degrees of inclination.

The manner of laying the blocks is substantially the same as in prior pavements.

The process of making the block is given in patent 94,063, the claim of which is "the herein-described method of cutting blocks for wooden pavement, so as to form by two cuts, or one cut and one splitting, two finished blocks with top and bottom level, or in parallel planes, and the sides beveled, one side being inclined with the fiber, and without waste of [103] material, substantially as set forth."

From what we have said it will be perceived that this claim and the first claim of patent No. 94,062 must be considered together. The manner of producing these blocks is described as cutting them from lumber by means of guides so as to cut the blocks of certain bevels, by which a block is produced having two of its sides inclined and with the grain running parallel to one and oblique to the other of the beveled sides; but the essential features of the apparatus described in this patent appear in many of the defendant's exhibits. Instead of having a table parallel with the shaft of the saw or at right angles with the saw itself, the patent in question uses a rest or guide in presenting the material to the saws, but the use of such guides is shown in Holtzapffel's "Turning and Mechanical Manipulation," and Crosby's patent and others.

The prior existence of the method of cutting blocks without waste by severing a large block

by a cross cut from a long stick and then dividing that block into two similar blocks by a splitting cut is satisfactorily established, as also the same result reached in the same way in the treatment of stone. In the case of the Ballard block, the splitting cut is made in a direction parallel with the grain; but that is because the object of having the grain run in a particular way controls the action of the mechanic, who makes the cut as he desires the fiber to run.

Complainant's expert admits that the patentee in the McBird patent, by the first cut he makes, produces a block of rhomboidal form, and, by a second oblique cut, divides his block into two equal wedge-shaped blocks, produced without waste of material; and the difference he points out between that and the Ballard and Waddell patent is, so far as the cutting operation is concerned, that in the former the cut which divides the rhomboid into two wedge-shaped blocks is made across the grain, while in the latter it is made in the general direction of the grain.

To cut the block so as to get the grain in a particular way, and so as to avoid waste, requires simple mechanical skill, without involving invention.

The result is that none of these claims can be sustained, and *the decree of the Court below is affirmed.*

---

[83] ANDREW CALTON, *Plff. in Err.*,
v.
THE PEOPLE OF THE TERRITORY OF UTAH.

(See S. C. Reporter's ed. 83-87.)

Conviction for murder—error in not instructing jury.

1. In a conviction for murder in the first degree in Utah, *held*, that the court erred in not directing the attention of the jury to the provision of the Penal Code as to their right to recommend imprisonment for life, at hard labor in the penitentiary, in place of the punishment of death.
2. By such action of the court, the prisoner was deprived of a substantial right.

[No. 1408.]

Argued Jan. 2, 1889. Decided March 11, 1889.

IN ERROR to the Supreme Court of the Territory of Utah, affirming a judgment of the District Court of that Territory, of death for murder in the first degree. *Reversed.*

The facts are stated in the opinion.

Messrs. **John H. Mitchell** and **Arthur Brown**, for plaintiff in error:

In Missouri, in order to constitute murder in the second degree, the wrongful killing must be not only with malice, but with premeditation.

State v. *Wieners*, 66 Mo. 14; *State* v. *Curtis*, 70 Mo. 595; *State* v. *Robinson*, 78 Mo. 306; *State* v. *Erb*, 74 Mo. 199; *State* v. *Ellis*, 74 Mo. 216; *Keenan* v. *Com.* 44 Pa. 55; *People* v. *Vance*, 21 Cal. 400; *State* v. *Lewis*, 74 Mo. 223.

Murder is the killing with malice aforethought.

Com. v. *Webster*, 5 Cush. 304; Bishop, Crim. Law, § 429; *Beauchamp* v. *State*, 6 Blackf. 299.

The charge was misleading.

State v. *Hill*, 4 Dev. & B. L. 495, 496; *Young* v. *State*, 11 Humph. 200; *Haile* v. *State*, 1 Swan (Tenn.) 250; Hale, P. C. 466, note; *Maher* v. *People*, 10 Mich. 212.

As to what is meant by heat of passion, see 5 Lawson, Crim. Def. pp. 1189-90; *State* v. *Norris*, 1 Hayw. (N. C.) 429; 1 Am. Dec. 564; *People* v. *Freel*, 48 Cal. 437.

The Laws of the Territory of Utah, p. 115, Sub. 7, Laws of 1878, and as amended, Laws 1884, provide that the judge shall not charge the jury as to matters of fact, or the weight of evidence.

Hopt v. *Utah*, 110 U. S. 574 (28: 262); *Seligman* v. *Kalkman*, 8 Cal. 216; *People* v. *Williams*, 17 Cal. 142; *People* v. *Dick*, 32 Cal. 216.

Where death ensues in the heat of blood, although a deadly weapon is used, it is only manslaughter.

2 Whart. Crim. Law, 974; Whart. Homicide, 189, 987, 990, 992.

A blow or blows are a just cause for provocation.

Com. v. *Drum*, 58 Pa. 9.

Cooling time may be one hour or half a day.

2 Bishop, 712.

The instruction that the question of insanity depended on defendant's ability to distinguish between right and wrong was error.

Parsons v. *State*, 81 Ala. 577; *State* v. *Pike*, 49 N. H. 399; *State* v. *Jones*, 50 N. H. 369; *Hoppe* v. *People*, 31 Ill. 385.

Mr. **Wm. A. Maury**, *Asst. Atty-Gen.*, for defendants in error:

The failure of a prisoner to make an objection in the trial court must, on a writ of error, be taken to be a waiver of the objection in a matter not fundamental in character.

Com. v. *Stowell*, 9 Met. 572; *People* v. *Bealoba*, 17 Cal. 389; *McCorkle* v. *State*, 14 Ind. 39.

The construction insisted on is at war with what has been laid down in California under a statute couched in the same language.

People v. *Strong*, 46 Cal. 302; *People* v. *Murphy*, 47 Cal. 103.

The employment of private counsel to assist in the prosecution of offenders is generally recognized in this country.

1 Bishop, Crim. Proc. § 281 and cases cited; *U. S.* v. *Hanway*, 2 Wall. Jr. 207.

Passion, as a palliating element, must be irresistible or uncontrollable to constitute manslaughter.

2 Bishop, Crim. Law, § 697; *Reg.* v. *Kelly*, 2 Car. & K. 814; *Rex* v. *Hayward*, 6 Car. & P. 157; Whart. Homicide, 178-9, ed. 1855; *Preston* v. *State*, 25 Miss. 387.

The court laid down the law correctly as to insanity.

People v. *Hoin*, 62 Cal. 120; *Flanagan* v. *People*, 52 N. Y. 467; *Com.* v. *Rogers*, 7 Met. 500.

A record may be amended even in a criminal case.

State v. *Craton*, 6 Ired. L. (N. C.) 164; *Com.* v. *Judd*, 2 Mass. 334; *Com.* v. *Field*, 11 Allen, 488; *State* v. *McComb*, 18 Iowa, 47; *Kennedy* v. *People*, 44 Ill. 283.

It was proper in the judge to say to the jury that they should examine the evidence of drunkenness with caution.

People v. *Williams*, 43 Cal. 344; *People* v. *Belencia*, 21 Cal. 544; *People* v. *King*, 27 Cal. 507; *People* v. *Franklin*, 70 Cal. 641; *People* v.

Mills, 98 N. Y. 176, 182-3; *Hopt* v. *Utah*, 110 U. S. 574 (28: 262).

[84] *Mr. Justice* **Harlan** delivered the opinion of the court:

The plaintiff in error, Calton, was indicted in the District Court of the Second Judicial District of the Territory of Utah for the crime of murder in the first degree, in that he "feloniously, unlawfully, willfully, purposely, premeditatedly, deliberately, and of his malice aforethought," killed and murdered one Michael Cullen. Under the plea of not guilty evidence was introduced by him for the purpose of showing: *First*, that at the time of the killing he was incapable, by reason of unsoundness of mind, of committing any criminal offense; *second*, that at most the killing was "upon a sudden quarrel or heat of passion," and, therefore, he could not be found guilty of any higher offense than voluntary manslaughter; *third*, that at the time of the killing he had reasonable ground to apprehend, and did apprehend, that deceased was about to do him great bodily harm.

He was found guilty of murder in the first degree. A motion for a new trial having been denied, and the defendant having elected, as under the territorial statutes he might do, to suffer death by shooting, rather than by hanging, it was adjudged that on a named day, between certain hours, he be publicly shot. Upon appeal to the supreme court of the Territory that judgment was affirmed, "save as to the time and the publicity of the execution thereof." This saving was because the local statute provides that "A judgment of death must be executed within the walls or yard of a jail or some convenient private place in the district." Laws [85] of Utah, 1878, p. 136. The present writ of error brings up for review that judgment of affirmance.

It appeared in proof that Calton, Tiberty and Cullen were residents of the Star Mining District in the Territory, and well acquainted with each other. On the morning the shooting occurred, Calton and Tiberty went to Milford, a small town near by, and there happened to meet Cullen. During the day they all indulged in strong drink, and became somewhat intoxicated. They were together during most of the time, and apparently upon friendly terms. About 6 o'clock in the afternoon the three started for home. They left Milford together in a wagon, Calton and Cullen sitting on the driver's seat, Calton driving, and Tiberty on a pile of ore sacks in the body of the wagon. They did not get far in the direction of their homes when Tiberty, leaving his bottle of liquor on the sacks, alighted from the wagon to get a whip lash that Calton had dropped. While he was on the ground a dispute, in some way not fully explained, arose between Cullen and Calton about the possession of Tiberty's bottle of liquor. Subsequently, and while the latter was off the wagon, a struggle ensued between Cullen and Calton, during which they clinched, each one having hold of the other's throat in such manner as to satisfy Tiberty, who was a short distance away, that they were angry. At one time Cullen seemed to be pressing Calton against or over the dash board. The latter finally released himself from the grasp of his antagonist, who was much the stouter man, and jumping to the ground, took a loaded pistol from a bundle he had in the wagon, and fired at Cullen five shots in rapid succession. According to the statements of Tiberty the deceased did not move after the first shot, the defendant saying, immediately after that shot was fired, that he had killed him, and that he "might as well give him the rest." Calton and Tiberty returned to Milford with the dead body in the wagon, and the former surrendered himself to an officer of the law.

The Penal Code of Utah established by the Act of February 18, 1876, provides that "Every murder perpetrated by poison, lying in wait, or any other kind of willful, deliberate, malicious and premeditated killing; or committed in the [86] perpetration of, or attempt to perpetrate, any arson, rape, burglary or robbery, or perpetrated from a premeditated design, unlawfully and maliciously to effect the death of any other human being other than him who is killed; or perpetrated by any act greatly dangerous to the lives of others, and evidencing a depraved mind, regardless of human life, is murder in the first degree; and any other homicide committed under such circumstances as would have constituted murder at common law, is murder in the second degree." Compiled Laws Utah, 1876, p. 585.

The same Code further provides that: "Every person guilty of murder in the first degree shall suffer death, or, upon the recommendation of the jury, may be imprisoned at hard labor in the penitentiary for life, at the discretion of the court, and every person guilty of murder in the second degree shall be imprisoned at hard labor in the penitentiary for not less than five, nor more than fifteen years." Compiled Laws Utah, 1876, p. 586.

It is clear that the authority given in the section last quoted, to substitute imprisonment at hard labor in the penitentiary for life for the penalty of death, when the accused is found guilty of murder in the first degree, depends upon a previous recommendation to that effect by the jury. Without such recommendation the court, in the absence of sufficient grounds for a new trial, has no alternative but to sentence the accused to suffer death. While in this case the jury were instructed as to what constituted murder in the first and second degrees, they were not informed as to their right, under the statute, to recommend imprisonment for life at hard labor in the penitentiary in place of the punishment of death. If their attention had been called to that statute, it may be that they would have made such a recommendation, and thereby enabled the court to reduce the punishment to imprisonment for life. We are of opinion that the court erred in not directing the attention of the jury to this matter. The statute evidently proceeds upon the ground that there may be cases of murder in the first degree, the punishment for which by imprisonment for [87] life at hard labor will suffice to meet the ends of public justice. Its object could only have been met through a recommendation by the jury that the lesser punishment be inflicted; and it is not to be presumed that they were aware of their right to make such recommendation. The failure of the court to instruct them upon

this point prevented it from imposing the punishment of imprisonment for life, even if, in its judgment, the circumstances of the case rendered such a course proper. It was well said in the dissenting opinion of *Mr. Justice* Henderson, in the supreme court of the Territory, that by the action of the district court "The prisoner was deprived of a substantial right. The determination of the question as to whether he should suffer death or imprisonment was one of vital consequence to him. The jury to whom the statute commits the determination of that question, at least in part, were not informed of their duty and responsibility in the matter so as to require them to exercise their judgment and discretion in relation to it, and by the verdict they rendered the court had none." These views are in accordance with the fundamental rules obtaining in the trial of criminal cases involving life.

Other questions were discussed at the bar, but as the instructions relating to them are somewhat obscure, and as they may not arise upon another trial in the form in which they are now presented, we forbear a determination of them.

For the error indicated the judgment is reversed, with directions for a new trial, and for such further proceedings as may not be inconsistent with this opinion.

---

[104] BENJAMIN RICHARDSON ET AL., *Appts.*,
v.
ASHBEL GREEN ET AL.

THOMAS M. NELSON ET AL., *Appts.*,
v.
SAME.

THOMAS M. NELSON, *Appt.*,
v.
SAME.

DANIEL E. SICKLES ET AL., *Appts.*,
v.
SAME.

(See S. C. Reporter's ed. 104-116.)

Practice—filing record on appeal—motion to dismiss—citation—when waived—jurisdiction as to amount—names of appellees.

1. This court will not entertain an appeal where the transcript of the record is not filed in this court at the term next succeeding the taking of the appeal, unless a recognized satisfactory excuse for the laches is made.

2. Where the record was duly received and filed by the clerk of this court, but the appeals had not been docketed because the rules as to a deposit for costs and as to entry of appearance had not, through inadvertence, been complied with, and afterwards, on a compliance with such rules, the case was docketed and appearance entered, a subsequent motion to dismiss for not docketing the case in time will not be granted.

3. The citation, where security is taken out of court after the term, is not jurisdictional. If, by accident, it has been omitted, a motion to dismiss the appeal will not be granted until an opportunity to give the requisite notice has been furnished.

4. The issuing of a citation may be waived by the appellees; and a general appearance by them is a waiver.

5. A claim of over $5,000, disallowed to the appellant, which is brought up by the appeal, is sufficient to give this court jurisdiction.

6. An appeal will not be dismissed on the ground that in the order allowing it the appellees are not named but it is stated therein that the other parties to the decree are appellees, if the bond on the appeal gives the names of the appellees in full.

[Nos. 181, 947, 1027, 1074.]

Argued Feb. 1, 4, 1889. Decided March 18, 1889.

APPEALS from decrees of the Circuit Court of the United States for the Western District of Michigan, for the distribution of the proceeds of sale of mortgaged property.

On motion to dismiss. *Appeals in Nos. 947, 1027 and 1074, and appeal in No. 181 from decree of May 3, 1883, dismissed; appeal in No. 181 from decree of October 8, 1883, dismissed, unless appellants shall issue and serve citation.*

The facts are stated in the opinion.

Messrs. **J. Hubley Ashton, Henry T. Dechert** and **D. A. McKnight,** for appellees, in support of motions to dismiss:

The appeals became inoperative by reason of the failure of the appellants to docket them here during the term to which they were respectively returnable, and should be dismissed. *Castro* v. *U. S.* 70 U. S. 3 Wall. 49 (18: 163); *Edmonson* v. *Bloomshire,* 74 U. S. 7 Wall. 306 (19: 91); *Grigsby* v. *Purcell,* 99 U.S. 506 (25: 354); *The Tornado,* 109 U. S. 117 (27: 877); *Killian* v. *Clark,* 111 U. S. 784 (28: 599); *Caillot* v. *Deetken,* 113 U. S. 215 (28: 983); *Fayolle* v. *Texas & P. R. Co.* 124 U. S. 523 (31: 534); *U. S.* v. *Burchard,* 125 U. S. 178 (31: 663); *Hewitt* v. *Filbert,* 116 U. S. 145 (29: 582); *Radford* v. *Folsom,* 123 U. S. 726 (31: 292).

Citations were necessary in this case. *Sage* v. *Iowa Cent. R. Co.* 96 U. S. 715 (24: 643); *Vansant* v. *Electro-Magnetic Gas-Light Co.* 99 U. S. 213 (25: 265); *Chicago & P. R. Co.* v. *Blair,* 100 U. S. 662 (25: 587); *Brown* v. *McConnell,* 124 U. S. 491 (31: 496).

Messrs. **L. D. Norris, Willard Kingsley** and **Daniel E. Sickles,** for appellants, in opposition:

A motion to dismiss a writ of error because not returned at proper time is waived by appearance. *Wood* v. *Lide,* 8 U. S. 4 Cranch, 180 (2: 588) *Bingham* v. *Morris,* 11 U. S. 7 Cranch, 99 (3: 281); *Pickett* v. *Legerwood* 32 U. S. 7 Pet. 144 (8: 638); *Owings* v. *Tiernan,* 35 U. S. 10 Pet. 24 (9: 333); *Van Rensselaer* v. *Watts,* 48 U. S. 7 How. 784 (12: 913).

Where the record was returned and docketed before motion to dismiss, no motion to dismiss under the ninth rule can be entertained. *Edwards* v. *U. S.* 102 U. S. 575 (26: 293).

Mr. Justice **Blatchford** delivered the opinion of the court: [106]

These are five appeals taken in a suit in equity brought by Ashbel Green and William Bond, trustees, against the Chicago, Saginaw and Canada Railroad Company, in the Circuit Court of the United States for the Western District of Michigan, for the foreclosure of a mortgage executed to the plaintiffs upon the railroad of that company. The mortgage was given to the plaintiffs, as trustees, to secure 5500 bonds, of $1,000 each, issued by the company, and payable to the plaintiffs, or bearer.

A decree was made, on June 30, 1882, directing a foreclosure and sale, and referring it to a master to determine the priority of those who claimed to be creditors of the company. On the 6th of November, 1882, the master filed his report, in which he divided the debts and bonds proved before him into four classes. In class A he placed the debts which had a priority over the bonds. The creditors in class A were [107] Thomas M. Nelson and James B. Soule, for a debt of $25,284.17, of which $12,497.48 had a priority, and was to be paid in full; and Thomas M. Nelson, for a debt of $7,779.42, of which $3,845.20 had a priority, and was to be paid in full. In class B he placed the *bona fide* holders of the bonds as purchasers of them, among whom were Daniel E. Sickles for 163 bonds, amounting to $269,541.26; and Benjamin F. Stevens, for 32 bonds, amounting to $51,247.20. In class C he placed persons who held the bonds as collateral security, and the amount of security so held. Among these was Benjamin Richardson, with a debt of $273,282.87, and collateral security in 200 bonds, amounting to $374,904.

After a hearing on the report of the master, and exceptions thereto, the court, on the 3d of May, 1883, made a decree providing for the distribution of the proceeds of the sale of the mortgaged property, which had taken place. After directing the payment of certain expenses and of receiver's certificates, it directed the payment *pro rata*, from the fund remaining, of certain specified bonds as a third class, no greater sum to be paid, where the same were held as security, than sufficient to satisfy the indebtedness for which they were held. In this class the decree named Sickles and Stevens, as owners, for the number of bonds and the amounts severally before mentioned; and Richardson and his assignee, Henry Day, for the debt before mentioned, with the lien on 200 bonds, amounting to the sum before mentioned. The decree then put into a fourth class the debts above mentioned, to Nelson and Soule, and to Nelson, to be paid *pro rata* from any surplus which should then remain.

On the 12th of July, 1883, Sickles and Stevens were permitted by an order of the court, to prosecute in their own names an appeal to this court from the decree of May 3, 1883; and by a like order, made on the same day, Richardson and Day were allowed to appeal to this court from the same decree. The appeal bond of Sickles and Stevens was filed in the Circuit Court on September 6, 1883, and that of Richardson & Day on August 14, 1883.

On the 6th of August, 1883, Sickles and [108] Stevens filed in the circuit court a petition alleging that the master, in computing the amount due to various claimants of the bonds other than the petitioners, and who held the bonds as collateral security and not as purchasers, had allowed to them interest to which they were not entitled. The petitioners set forth that they desired a rehearing on the point thus stated, and prayed that, where the error had occurred, there might be a recomputation of the interest and a return of the overpayment, where distribution had already been made; and that, in the mean time, the master be directed to make no further distribution of the fund; and for such other and further relief as should be equitable and proper.

On a hearing of the matter, the court made an order, on the first of September, 1883, adjudging that the master had made an erroneous computation of the interest in the case of bonds held by divers claimants as collateral security, in that he had allowed such claimants all coupons appearing with and attached to the bonds, without regard to the date when they were delivered to the holders, instead of computing interest upon them only from the date of their delivery; and referring it to the clerk of the court to make a computation of the interest on the bonds, from the date of their delivery to the several persons who held them as collateral security. The clerk reported such computation, and stated the amount of the 200 bonds held by Benjamin Richardson, as collateral security, to be $330,725, instead of, as before, $374,904. It also appeared that Richardson and Day had been overpaid $2,173.91; and that the Wrought Iron Bridge Company had been overpaid $183.60.

On September 11, 1883, Nelson and Soule were allowed an appeal from the decree of May 3, 1883; and on that day Thomas M. Nelson was also allowed an appeal from the same decree. An appeal bond on each of these two appeals was filed in the circuit court on October 15, 1883.

On the 8th of October, 1883, the court, on a further hearing, entered a decree which recited that the cause "came on to be reheard;" and also recited the filing of the petition by Sickles and Stevens for a rehearing, and the making of the reference to the clerk and his report, and stated that it appeared "to this court that a re- [109] hearing should be had, and a correction made in the decree" of May 3, 1883, and, after reciting the provisions of that decree in regard to paying the creditors in the third class, then proceeded to give anew a list of the third class, putting down Sickles and Stevens as the owners respectively of the same number of bonds, for the same amounts, as in the decree of May 3, 1883, and the debt of Richardson and Day at the same amount as in that decree, with a lien on 200 bonds, amounting to $330,725, instead of $374,904, as in that decree. It also adjudged that the Wrought Iron Bridge Company had been overpaid $183.60, and Henry Day, assignee of Benjamin Richardson, $2,173.91, and that they should severally pay into the court those sums, which should be distributed among the remaining several claimants, in proportions and amounts specified in the decree; among others, to Benjamin F. Stevens, $113.25; to Daniel E. Sickles, $595.66; to J. Bower & Co., $373.93; to John F. Betz, $357.41; to Thomas W. Ferry, $205.02; to Hiram Hodgden, $37.49; to John A. Elwell, $16.93; to Frederick A. Nims, $40.53; and to Edward P. Ferry, $64.32. The decree further provided "that all persons having claims against the fund created by the sale of the mortgaged property herein, whether evidenced by bonds, coupons, or otherwise, shall present the same to this court within five days from the date of this decree, and in default thereof the clerk of this court shall distribute to the parties, respectively, all moneys to which they are entitled

hereunder." It further provided "that the decree of May 3, 1883, entered herein, shall stand ratified and confirmed, except as the same is changed and modified by this decree."

On the 17th of November, 1883, Richardson and Day were allowed an appeal from the decree of October 8, 1883. The appeal bond on that appeal was filed in the circuit court, November 28, 1883.

The appeal of Richardson and Day from the decree of May 3, 1883, and their appeal from the decree of October 8, 1883, are together known as No. 181. There is no other appeal but theirs, from the decree of October 8, 1883. The appeal of Nelson and Soule from the decree of May 3, 1883, is No. 947; the appeal of Nelson from that decree is No. 1027; and the appeal of Sickles and Stevens from that decree is No. 1074.

[110]

Motions are now made, in the four cases, by John Bower & Co., and John F. Betz, to dismiss the two appeals in No. 181, and the other three appeals, on the grounds, that the transcript of the record was not filed, and the cause was not docketed, in this court at the term thereof next after the time when the appeals respectively were prayed and allowed; and that no citations were issued on any of the appeals. A motion is also made by T. W. Ferry, Hodgden, Elwell, Nims, and E. P. Ferry, to dismiss the four appeals from the decree of May 3, 1883, for want of jurisdiction, and also for want of due prosecution, because they were not lodged, or filed, or docketed, in this court during the term next succeeding the date of their allowance; and to dismiss the appeal, in No. 181, from the decree of October 8, 1883, for want of jurisdiction because the amount involved is less than $5,000; and to dismiss the appeals in Nos. 947 and 1027, for want of citations; and to dismiss all five of the appeals, because the appellees are not described in them with certainty.

As to Nos. 947, 1027, and 1074, the appeal in each is from the decree of May 3, 1883. In Nos. 947 and 1027, the appeals were allowed by an order of court, made in open court, on the 11th of September, 1883; and in No. 1074, by an order of court, made in open court, on the 12th of July, 1883. In No. 947, the transcript of the record was filed, and the case docketed, in this court, January 26, 1888; in No. 1027, June 26, 1888; and in No. 1074, August 30, 1888. The term of this court next ensuing the allowance of the several appeals in Nos. 947, 1027, and 1074, from the decree of May 3, 1883, was the October Term, 1883. That term commenced on the 8th of October, 1883, and ended on the 5th of May, 1884. The transcript of the record filed in all five of the appeals is certified by the clerk of the circuit court by a certificate bearing date October 4, 1884. The same transcript of the record is filed in all of the appeals. The transcript left the office of the clerk of the Circuit Court on October 6, 1884, and was sent by express, and reached the clerk of this court on October 10, 1884; but no step was taken by any of the parties appellant, in No. 947, No. 1027, or 1074, to furnish security to the clerk for the payment of his fees, under section 1 of Rule 10 of this court, or to have the transcript filed, or the case docketed, or an appearance entered, at the term of this court next after the allowances of the appeals, to wit, the October Term, 1883.

[111]

The rule being well settled that this court will not entertain an appeal where the transcript of the record is not filed in this court at the term next succeeding the taking of the appeal (*Credit Co.* v. *Arkansas Cent. R. Co.* 128 U. S. 258, 259 [*ante*, 448, 449] and cases there cited), unless a recognized satisfactory excuse for the laches is made, it is sought in these cases to show such excuse by the following facts: In October, 1883, the appellants Richardson and Day, as one party, Sickles and Stevens, as one party, and Nelson and Soule and Thomas M. Nelson, as one party, gave to the clerk of the circuit court a joint verbal order to make a transcript of the record without unnecessary delay, and forward it to the clerk of this court, the three parties to pay to the former clerk the fees therefor *pro rata*, according to the amounts of their respective claims. After such order to the clerk, the appeal of Richardson and Day from the decree of October 8, 1883, was taken. The clerk did not know that each appeal was a separate matter, but believed that all the appeals made but one case, and that, if the record should reach this court in time for any one appeal, it would bring up the case as a whole, with all the appeals; and he understood and believed, while he was copying the record, that if the transcript should arrive at the office of the clerk of this court on or before October 15, 1884, it would be in ample time to make all of the appeals valid, on the filing and docketing of the transcript. The clerk prepared the transcript as soon as he could, having regard to the other duties of his office and to the size of the record (which makes 1235 printed pages, as printed here). He did not complete the making of the transcript until about June 24, 1884, and forwarded it by express to the clerk of this court on October 6, 1884. These facts are supported by an affidavit of the clerk, and by one of the solicitors for Nelson and Soule, to the same effect.

We cannot admit the validity of this excuse, in regard to the three appeals in question. All suitors in this court are bound by its written rules, and its practice and decisions are established and known. The same ruling must apply to the appeal in No. 181, from the decree of May 3, 1883. That appeal was allowed July 12, 1883. The transcript of the record was not certified until October 4, 1884, and did not reach the hands of the clerk of this court until October 10, 1884, all of which occurred after the expiration of the October Term, 1883, of this court. That appeal therefore fails, with the other three.

[112]

But the appeal in No. 181, of Richardson and Day, from the decree of October 8, 1883, was allowed on November 17, 1883, after the commencement of the October Term, 1883, of this court. It was, therefore, returnable to the October Term, 1884, of this court. The transcript, as before stated, was put into the hands of the clerk of this court, in his office, on the 10th of October, 1884. The counsel for Day and Richardson took no further step in the matter until September 25, 1885, when he wrote to the clerk of this court, desiring his appearance to be entered for them. After some fur-

ther correspondence, the counsel was informed by the clerk that, although the latter had received the record in October, 1884, the appeals had not been docketed, because the rule as to a deposit for costs (Rule 10) and that as to the entry of appearance (Rule 9) had not been complied with. On a compliance with such rules, and on the 26th of October, 1885, the case was docketed, and an appearance for Richardson and Day was entered.

The principle applicable to such a state of facts is that established by the decision in *Edwards* v. *United States*, 102 U. S. 575 [26:293]. In that case a writ of error was issued, returnable at October Term, 1877. A transcript of the record was lodged in the office of the clerk of this court in September, 1877, but by an oversight of the counsel for the plaintiff in error no fee bond was given, and the cause was not docketed during October Term, 1877. In September, 1878, an acceptable fee bond was given, and the cause was formally docketed. A motion was made, at October Term, 1880, to [113] dismiss the writ of error. This court denied the motion, and said (p. 576): "We are aware that in some of the cases it has been said that a writ of error or an appeal becomes inoperative if a transcript is not filed and the cause docketed during the term to which it is made returnable, but this has always been in cases where a return had not been made and a transcript had not been filed within the time. The language should therefore be construed in connection with those facts. In *Owings* v. *Tiernan*, 35 U. S. 10 Pet. 447 [9:489], and *Van Rensselear* v. *Watts*, 48 U. S. 7 How. 784 [12:913], leave was given to docket the cause after the term, when the transcript had been filed in time, but through inadvertence a fee bond had not been given and there had not been in the mean time a motion to docket and dismiss. That is this case . . . If a return is made and the transcript deposited in the clerk's office in time, our jurisdiction is kept alive. The docketing of the cause after that is mere procedure; and if unreasonably delayed, the parties may be subjected to the consequences of a failure to prosecute a suit, which rest largely in the discretion of the court, when not provided for by rules. Rule 9 is of that class."

In the present case, although the transcript of the record in No. 181 was filed and the case was docketed on October 26, 1885, no motion to dismiss was made until the present term; and, under the foregoing views, we are of opinion that the appeal of Richardson and Day from the decree of October 8, 1883, cannot be dismissed on the ground that the case was not actually docketed during October Term, 1884.

One ground urged for dismissing the appeal of Richardson and Day from the decree of October 8, 1883, is that although that appeal was allowed by an order of court, made in open court on the 17th of November, 1883, at the same term at which the decree of October 8, 1883, was entered, yet the bond given to perfect such appeal was approved by the District Judge on November 28, 1883, apparently out of court, although filed in the court on that day; and that under these circumstances, a citation to the appellees was necessary, and none appears ever to have been issued.

As the appeal in question was allowed in open court, during the term at which the de- [114] cree appealed from was rendered, and that appeal was perfected by the filing in due time of a bond duly approved, and the transcript of the record was, as we have held, duly lodged in this court at the next ensuing term thereof, namely, October Term, 1884, in such manner as to give this court jurisdiction of the case, no citation was necessary, unless the bond was accepted, after the term at which the appeal was allowed. In the present case, it does not appear that the appeal bond was accepted in open court, or at or during the term at which the appeal was allowed; and a citation would seem to have been necessary. *Sage* v. *Iowa Cent. R. Co.* 96 U. S. 712, 715 [24:641, 643]; *Hewitt* v. *Filbert*, 116 U. S. 142, 144 [29:581, 582]; *Brown* v. *McConnell*, 124 U. S. 489, 491 [31:495, 496].

But, as to a citation, this case falls within the ruling in *Dodge* v. *Knowles*, 114 U. S. 430, 438 [29:144, 297], where it is said: "The judicial allowance of an appeal in open court at the term in which the decree has been rendered is sufficient notice of the taking of an appeal. Security is only for the due prosecution of the appeal. The citation, if security is taken out of court, or after the term, is only necessary to show that the appeal which was allowed in term has not been abandoned by the failure to furnish the security before the adjournment. It is not jurisdictional. Its only purpose is notice. If by accident it has been omitted, a motion to dismiss an appeal allowed in open court and at the proper term will never be granted until an opportunity to give the requisite notice has been furnished; and this whether the motion was made after the expiration of two years from the rendition of the decree or before."

In *Hewitt* v. *Filbert*, *supra*, it is said, p. 144 [582]: "The allowance by the court in session before the end of the term at which the decree was rendered, and when both parties are either actually or constructively present, is in the nature of an adjudication of appeal, which if docketed here in time gives this court jurisdiction of the subject matter of the appeal, with power to make all such orders, consistent with the practice of courts of equity, as may be appropriate and necessary for the furtherance of justice."

But the issuing of a citation may be waived by the appellees; and a general appearance by [115] them is a waiver of a citation. *Alviso* v. *United States*, 72 U. S. 5 Wall. 824 [18:492]; *Sage* v. *Iowa Cent. R. Co.* 96 U. S. 712, 715 [24:641, 643]. In No. 181 a general appearance for the appellees T. W. Ferry, Hodgden, Elwell, Nims and E. P. Ferry was entered in this court on January 11, 1889. As to John Bower & Co. and John F. Betz no general appearance for them has been entered in No. 181, but only on January 14, 1889, an appearance specially for the making of the motion by them. This is not a waiver of a citation.

Under these circumstances, a citation will be issued by this court, on the appeal in No. 181 by Richardson and Day from the decree of October 8, 1883, to the appellees in that appeal who have not entered here a general appearance in No. 181, returnable at the next term of this court, unless the issuing of such citation

shall be duly waived on the part of such appellees.

It is also urged, in the motion made by Thomas W. Ferry and others to dismiss the appeal in No. 181 from the decree of October 8, 1883, that this court has no jurisdiction of it, because the amount involved is not more than $5,000. The ground urged is that the amount involved, so far as that appeal by Richardson and Day is concerned, is only $2,173,91, which is the amount that Day, as assignee of Richardson, was directed to pay into court as having been overpaid on his claim.

It appears by the master's report that he disallowed the claim of Richardson as pledgee or purchaser of 400 bonds other than the 200 bonds the claim to which was allowed to Richardson. The amount of money involved in the claim of Richardson and Day to these 400 bonds largely exceeds the sum of $5,000. This claim is fairly brought up by their appeal from the decree of October 8, 1883, because that decree contains an express provision "that the decree of May 3, 1883, entered herein, shall stand ratified and confirmed, except as the same is changed and modified by this decree."

Moreover, the circuit court, by reason of the petition of Sickles and Stevens for a rehearing, and by reason of the rehearing which was had, did not lose its hold upon the fund to be distributed, nor part with its control of the cause, [116] until the decree of October 8, 1883, was made, so far as claims against the fund created by the sale of the mortgaged property were concerned. That decree contained a provision that persons having claims against such fund, whether evidenced by bonds, coupons or otherwise, should present the same to the court within five days from the date of that decree, and that, in default thereof, the clerk should distribute to the parties the moneys in his hands.

These provisions save the appeal of Richardson and Day from the decree of October 8, 1883, as to amount, and enable them to have adjudicated by this court, on the hearing of that appeal, at least their claim in respect of the 400 bonds not allowed to them.

It is also objected, on the motion to dismiss made by Thomas W. Ferry and others, that, in the order of November 17, 1883, allowing an appeal to Richardson and Day from the decree of October 8, 1883, the appellees are not named; but it is stated only that "The other parties of said cause, original and intervening (as appearing in the said final decree)," are "appellees." But the bond on such appeal, filed November 28, 1883, is given to the clerk of the circuit court for the use and benefit of twenty-five appellees, naming them, and among them are by name the five appellees by whom the motion on that ground is made. We think the objection is not a good one.

It results from these views that the appeals in No. 947, No. 1027, and No. 1074 must be dismissed; that the appeal in No. 181 from the decree of May 3, 1883, must be dismissed; and that the motion to dismiss the appeal of Richardson and Day, in No. 181, from the decree of October 8, 1883, must be granted, unless the appellants therein shall procure to be issued and served on the appellees therein a citation from this court, in the terms before set forth, returnable at the next term thereof, provided the issuing and service of such citation shall not be duly waived; and it is ordered that such citation shall issue, if a request therefor shall be filed with the clerk.

As Richardson has died since the day these motions were argued, the order to be made will be entered nunc pro tunc, *as of that day, February 4, 1889.*

HENRY G. THOMPSON, *Appt.*, [117]
v.
THOMAS G. HALL ET AL.

(See S. C. Reporter's ed. 117-122.)

Letters patent.

Upon the evidence in this case, *held*, that Johnson was not the first inventor of the combination claimed in the patent issued to the plaintiff, as assignee, for an improvement in cutting-pliers.

[No. 186.]

Argued March 6, 7, 1889. Decided March 18, 1889.

APPEAL from a decree of the Circuit Court of the United States for the Eastern District of New York, dismissing a suit, for the alleged infringement of letters patent No. 232,975, granted October 5, 1880, to the plaintiff, as assignee of the inventor, Moses C. Johnson, for an improvement in cutting-pliers. *Affirmed.*

See *S. C.* below, 25 Fed. Rep. 906.

The facts are stated in the opinion.

Mr. **Horace Barnard** for appellant.

Mr. **Amos Broadnax** for appellees.

Mr. Justice **Blatchford** delivered the opinion of the court.

This is a suit in equity, brought in the Circuit Court of the United States for the Eastern District of New York, by Henry G. Thompson against Thomas G. Hall, J. F. Oliver, Samuel Leopold, and David L. Harris, for the alleged infringement of letters patent No. 232,975, granted October 5, 1880, to the plaintiff, as assignee of the inventor, Moses C. Johnson, for an improvement in cutting-pliers, on an application filed June 2, 1880.

The specification, drawings, and claim of the patent are as follows:

"This invention relates to cutting-pliers, and is an improvement on that class of pliers represented in United States patent No. 209,677, [118] dated November 5, 1878, granted to T. G. Hall, to which reference may be had. In that invention, either of the two hand-levers may be turned on its pivot without turning the other; and the tool-body formed by the face or covering plates is permitted to vibrate, or turns more or less, with relation to the handles, and the central space between the cutting-faces of the jaw-levers, when the pliers are taken in the hand to be used, drops more or less out of line with the central line of the handles, making, as it were, a loose joint midway between the ends of the pliers.

"One of the objects of my invention is to construct a stiff pair of pliers, or pliers in which the hand and jaw-levers shall each be compelled to move positively in an opposite direction to the movement of its fellow, or a pair of pliers in which the tool-body shall not of it-

self swing or vibrate upon the pins or studs holding the hand-levers.

[119] "In the patent above referred to, the end of wire or other thing cut off by the cutters drops into and injures the spring that opens the jaw-levers. This I obviate by providing each jaw-lever with a lip to cover or bridge the space between the jaws, as the jaw-levers are closed.

"My invention consists in the combination and arrangement of parts for effecting these ends, as hereinafter specified and claimed.

"Figure 1 represents, in side elevation, a pair of cutting-pliers containing my improvements; and Fig. 2, a like view with one of the body or side plates removed.

Fig. 1.

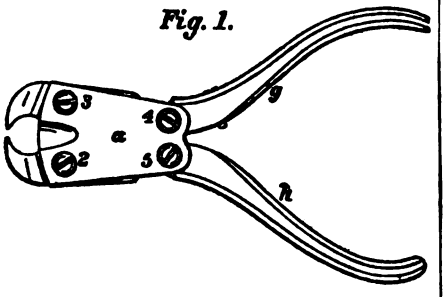

Fig. 2.

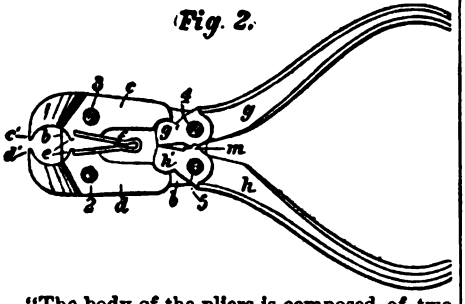

"The body of the pliers is composed of two side plates, *a b*. These side plates are fixed together by the screws 2 3 4 5. Of these screws, those 2 3 are the fulcra of the jaw-levers *c d*, having at their ends the usual cutters or cutting-surfaces *c' d'*. Each of these jaw-levers has a lip, *l*, and the end of one meets the end of the other lip just as or just before the two cutting-edges *c' d'* separate the wire or other metal end to be cut off by them, thus closing the space between the said jaw-levers and side plates, in which is placed the spring *f*, and preventing the entrance into said space of hard pieces of wire or other articles that would clog the pliers. These lips also serve another essential purpose—viz.; that of holding the ends of the spring from displacement, and obviating the employment of a separate pin or stud to hold the said spring at one end, as heretofore common.

"The screws 4 5 serve as the fulcra for the hand-levers *g h*, having short arms *g' h'*, to act upon the ends of the longer arms of the jaw-levers and turn them on their fulcra to close the jaws and bring the cutting-edges together. The spring *f* opens the jaws the instant the clasping pressure on the hand-levers is relaxed.

"In order to move the jaw-levers equally at all times and prevent the jaw-levers and body of the pliers turning on the handles, I have provided one hand-lever with a prong, *m*, having a rounded end that enters a rounded notch in the opposite lever. This one prong and its notch are always in engagement, and so connect the two levers that the body of the pliers cannot vibrate on the screws 4 5, but, on the [120] contrary, the two levers may turn each on its own pivot, both levers always turning the same distance, but in exactly opposite directions. This connection between the two hand-levers, as described, insures a stiff pair of pliers, that can be handled more readily and accurately than the old form of cutting-pliers referred to, and which are more positive as to the movement of the cutting-jaws.

"I am aware, in bolt-cutters, where the short ends of the hand-levers are jointed with the long ends of the cutting-jaw levers, that a series of teeth or cogs have been interposed to cause the hand-levers to be geared together; but in such bolt-cutters one single tooth and notch would not operate to always keep the two hand-levers locked together as to their movement in unison, as is the case with my one prong, *m*, rounded at its end and inserted within a rounded notch. I claim—

"The body composed of the side plates *a b*, the independent fulcra 2 3 4 5 for the jaw-levers and hand-levers, the jaw-levers provided with cutting-edges and with lips *e*, and the hand-levers having short arms *g' h'*, and a prong and notch always in engagement, as described, combined with the V-shaped spring, held, as described, by the lips of the jaw-levers, all as and for the purpose set forth."

One of the defenses set up in the answer is, that Johnson and Thompson surreptitiously obtained the patent in fraud of the rights of the defendants; that the defendants are trustees and directors of a New York corporation, known as the Interchangeable Tool Company; that that corporation was organized in August, 1878, for the purpose of manufacturing cutting-pliers or nippers, under letters patent No. 209,677, granted to the defendant Hall, November 5, 1878; that Hall invented certain improvements upon such pliers, and immediately described and explained them to the officers of the company; that the company thereupon caused a model of them to be made, embracing such improvements; that Johnson was employed to make such model pliers for the company, and made them for the company while in its employ, and under the direction of Hall; that Johnson was in the employ of the company, in making such pliers, from April 20, 1879, until May 1, 1880, during which time the company [121] made and sold upwards of 30,000 of such pliers, with the knowledge and consent of Johnson, and without any objection on his part, and without notice that he claimed to be the inventor of the whole or any part of such pliers, or intended to apply for a patent for the same; that Hall was the first and original inventor of said original cutting-pliers and of said improvements thereon, and assigned to the company the whole of the patent of November 5, 1878, immediately on its issue, and also the whole of the said improvements upon such cutting-pliers; that Johnson, after so being in the employ of

the company for one year, was dismissed from its service, and thereupon, as the result of a conspiracy between Thompson, Johnson, and one Gustam, Johnson falsely claimed that he was the first and original inventor of said improvements, and applied for a patent therefor, and sold his pretended claim to the invention to Thompson; and that Johnson, without the knowledge of Hall, or of the other defendants, or of the company, applied for a patent for said improvements, falsely alleging that he was their first and original inventor, and surreptitiously obtained said patent No. 232,975, for said invention of Hall, and for an improvement upon the pliers so patented November 5, 1878.

There was a replication to this answer, proofs were taken, and the circuit court entered a decree dismissing the bill, from which the plaintiff has appealed. In its opinion (25 Fed. Rep. 906) the circuit court stated, that the question at issue was whether the combination covered by the claim of the plaintiff's patent was invented by Johnson while he was an employé of the corporation; that the plaintiff had sought to prove that a model produced by him, known as Exhibit C, was made by Johnson while he was in the employ of the company; that, on the other hand, the defendants had sought to prove that that model was not made by Johnson while he was employed by the company, but after he had been discharged from its employ, and for the purpose of supporting a fraudulent claim to an invention really made by Hall, and which claim had been put forth by Johnson for the first time after he had been discharged from the service of the company; and that, [122] upon a full consideration of all the evidence, the conclusion of the court was, that Exhibit C was not made while Johnson was a workman for the company, but was made subsequently to his leaving its employment, and that he was not the first inventor of the combination claimed in the patent issued to the plaintiff.

The testimony is voluminous and contradictory; and, without discussing it, it is sufficient to say that we are of opinion that the evidence establishes the conclusion reached by the Circuit Court, and that *the decree must be affirmed; and it is so ordered.*

---

[122] NATHANIEL D. MOORE ET AL., *Appts.*,
v.
CHRISTINA CRAWFORD ET AL.

(See S. C. Reporter's ed. 122-142.)

Fraud in conveyance—equitable trust—power of a court of equity—breach of parol promise as to land—covenants in deed—subsequently acquired title—sufficiency of bill—offer to perform when unnecessary.

1. Where a person has received a conveyance of land, and conveys the same to another with covenant of warranty, and subsequently induces his grantors to convey the same lands to his wife, on the destruction or loss of his own deed, for the avowed purpose of avoiding the deed he had given to such other person, the wife, being fully advised of the purpose and paying no consideration for the conveyance, is to be treated as a party to the fraud, and held as trustee *ex maleficio;* and she may be compelled to convey to her husband's grantee.

2. Whenever the legal title to property is obtained through means or under circumstances which render it unconscientious for the holder of the legal title to retain and enjoy the beneficial interest, equity impresses a constructive trust on the property thus acquired, in favor of the one who is truly and equitably entitled to the same.

3. A court of equity has jurisdiction to reach the property, either in the hands of the original wrong doer or in the hands of any subsequent holder, until a purchaser of it in good faith and without notice acquires a higher right and takes the property relieved from the trust.

4. The breach of a parol promise as to an interest in land does not constitute such fraud as will take a case out of the Statute of Frauds.

5. When one makes a deed of land, covenanting therein that he is the owner, and subsequently acquires an outstanding and adverse title, his new acquisition inures to the benefit of his grantee, on the principle of estoppel.

6. It is only when an oral agreement is clearly and satisfactorily proven by testimony above suspicion and beyond reasonable doubt, that it will be enforced to establish rights in land at variance with the muniments of title.

7. Where there is enough in the bill to warrant the relief, and the defendants could not have been taken by surprise, the decree should not be reversed on the ground that the *allegata* and the *probata* do not sufficiently agree to justify it.

8. Where there is no offer in the bill to pay the balance of the purchase money, but the case shows that a tender would have been but an empty show, and the court has power to require its payment, the allegation is merely formal and immaterial.

[No. 700.]

Submitted Jan. 2, 1889. Decided March 18, 1889.

APPEAL from a decree of the Circuit Court of the United States for the Western District of Michigan, compelling a conveyance of lands to complainants, and for rents and profits from the date of filing the bill. *Affirmed.*

Statement by *Mr. Chief Justice* **Fuller:** [123]

Appellees, the widów and heirs of John Monroe, deceased, filed their bill against Nathaniel D. Moore and Helen Moore, to compel a conveyance of the one undivided sixth part of one hundred and sixty acres of mineral land in Ontonagon County, Michigan, which had been located by Nathaniel D. Moore, under an agreement with James H. McDonald and John McKay, that Moore should have a one third interest in consideration of his services in prospecting for land having iron ore, and selecting and locating that in question. It was upon Moore's application that the patent was issued from the state land office at Lansing, in January, 1875, [124] to McDonald and McKay, the purchase money being furnished by them and paid over by him.

By the testimony of Moore and McKay it was established that Moore was to have a one third interest, while McDonald admitted that he was to have an interest, but was uncertain whether it was to be one third or one fourth.

One McIntyre testified that the agreement between Moore, McDonald and McKay was in writing and signed in his presence by McDonald and McKay, but he was not sure whether Moore signed it or not. The execution of such an agreement was denied, and the circuit court considered McIntyre's testimony too indefinite as to its terms to warrant proceeding upon it.

On the 18th day of October, 1875, Moore, who was then unmarried, executed and delivered to John Monroe a deed in fee simple, with covenants of seisin, against incumbrances, and of general warranty, for an undivided one sixth interest in said lands, which was duly recorded

December 20 1875. The consideration was two hundred and fifty dollars, of which Monroe paid ten dollars in cash, and for the residue gave his promissory note to Moore, payable one year after its date. Moore informed Monroe at the time, that he had arranged with McDonald and McKay for a one third interest, and that the deed was then probably made out.

Pursuant to their agreement McDonald and McKay, some time in 1875, executed a deed to Moore for a one third interest in the land, which was deposited with one Viele to be delivered to Moore when McDonald and McKay should direct. McDonald testified that Moore was indebted to him, and he wished delivery delayed until the debt was arranged and satisfied, which was finally effected in 1877. Moore does not seem to have known about the execution of this deed, and it appears to have been subsequently lost. McDonald and McKay never denied Moore's right to his interest, but always admitted it, and McDonald testifies that it was understood that Moore should have the interest any time he called for it. In December, 1880, McDonald and McKay conveyed an [125] undivided one third interest in the land to Helen Moore, wife of N. D. Moore, who requested the conveyance to be made to his wife for the express purpose, as he admitted, of defeating the deed he had previously given to Monroe for one sixth of the land. Monroe died intestate in Colorado in August, 1878, and Moore, knowing that his deed to Monroe had been recorded, expected Mrs. Monroe would make trouble. No consideration passed when McDonald and McKay executed and delivered this conveyance, and Mrs. Moore was not present when it was executed; but she had been informed by her husband that it was to be made to her, and had full notice of his deed to Monroe. Since the conveyance to, Helen Moore, N. D. Moore has substantially managed the property as if it were his own.

Further reference to the pleadings and evidence is made in the opinion. Hearing having been had upon bill as amended, answer, replication, and proofs, the circuit court, *Judge* Sage presiding, delivered its opinion, which is reported in 28 Fed. Rep. p. 824, and decree was thereupon entered for conveyance to complainants as prayed, and for rents and profits from the date of the filing of the bill, less the amount due on the two hundred and forty dollar note, from which decree this appeal was prosecuted. Mrs. Moore having died pending the appeal, Nathaniel D. Moore, Jr., her sole heir at law, and John McKay, administrator of her estate, were made coappellants with Nathaniel D. Moore.

Messrs. **Dan H. Ball, Irving D. Hanscom** and **John F. Dillon,** for appellants:

Complainants must stand or fall by the case made by the bill.

Kelly v. *Kelly*, 54 Mich. 30; 2 Dan. Ch. Pl. & Pr. 1037 and cases cited; *Piatt* v. *Vattier*, 34 U. S. 9 Pet. 405 (9:173); Pom. Cont. § 323.

Agreement must be complete in itself.

Pom. Cont. § 145.

The statute covers every case where an interest in land is devested.

Whiting v. *Butler*, 29 Mich. 144; *Trask* v. *Green*, 9 Mich. 366; *Groesbeck* v. *Seeley*, 13 Mich. 345; *Bumpus* v. *Bumpus*, 53 Mich. 346.

No trust arises by implication where a grantor makes a voluntary conveyance.

Palmer v. *Sterling*, 41 Mich. 221; *Weare* v. *Linnell*, 29 Mich. 224; *Garfield* v. *Hatmaker*, 15 N. Y. 475; *Everett* v. *Everett*, 48 N. Y. 218; *Stebbins* v. *Morris*, 23 Fed. Rep. 360.

Principles upon which courts of equity act are well settled.

Bond v. *Hopkins*, 1 Sch. & Lef. 413, 429; 1 Pom. Eq. Jur. 49.

An equitable estate requires the simultaneous existence of two estates or ownerships in the same subject matter—the one legal, the second equitable.

1 Pom. Eq. § 147.

If A voluntarily conveys land to B, who verbally promises to hold the property in trust for C, the case falls within the statute, and chancery will not enforce the promise.

Lantry v. *Lantry*, 51 Ill. 458; Brown, Frauds, §§ 94, 95, 437; *Walker* v. *Hill*, 21 N. J. Eq. 202; Perry, Trusts, § 181; *Hoge* v. *Hoge*, 1 Watts, 213; 2 Pom. Eq. Jur. § 1014.

A contract void under the Statute of Frauds is a mere nullity.

Scott v. *Bush*, 26 Mich. 421; *Raub* v. *Smith*, 61 Mich. 543; *Glass* v. *Hulbert*, 102 Mass. 24; *Dung* v. *Parker*, 52 N. Y. 494; *Dunphy* v. *Ryan*, 116 U. S. 491 (29:703).

Where a contract, void under the statute, has been executed upon one side, and the other party has accepted the money or benefit resulting to him from such performance, an action will lie against him for the value thereof upon the common counts in assumpsit.

Scott v. *Bush*, 26 Mich. 418; *Sutton* v. *Rowley*, 44 Mich. 112; *Liddle* v. *Needham*, 39 Mich. 147.

A contract void under the Statute of Frauds, cannot be used for any purpose whatever.

Chamberlain v. *Dow*, 10 Mich. 319; *Hall* v. *Soule*, 11 Mich. 494; *Holland* v. *Hoyt*, 14 Mich. 238; *Grimes* v. *Van Vechten*, 20 Mich. 410; *Kelly* v. *Kelly*, 54 Mich. 48.

The holder of a good title clothes his grantee with the rights, and conveys to him the same title, which he himself holds.

East v. *Pugh*, 71 Iowa, 162; *Peckham* v. *Balch*, 49 Mich. 179; *Hutchins* v. *Hutchins*, 7 Hill, 104.

Equity will not enforce a written agreement for sale of land which has been abandoned by parol by the party seeking performance.

King v. *Morford*, 1 N. J. Eq. 274; *Maxfield* v. *Terry*, 4 Del. Ch. 618.

A person who assents to the transaction is bound.

Truesdail v. *Ward*, 24 Mich, 117; *Peake* v. *Thomas*, 39 Mich. 589; 2 Pars. Cont. 191.

A covenant warranty of title was not equivalent to a covenant for further assurance.

Krumbaar v. *Burt*, 2 Wash. C. C. 406; Bouv. Law Dict. title, *Covenant*; 1 Pom. Eq. §§ 63, 424, 378–384.

Every bill must show that the complainant has a right to the relief demanded.

1 Dan. Ch. Pl. 360.

Substantially the same case must be proved as that stated upon the record.

2 Dan. Ch. Pl. & Pr. 1037 and cases cited; *Cox* v. *Cox*, 26 Pa. 375; *Bomier* v. *Caldwell*, 8 Mich. 463; *Tilden* v. *Streeter*, 45 Mich. 541; *Piatt* v. *Vattier*, 34 U. S. 9 Pet. 405 (9:173);

Texas v. *Hardenberg*, 77 U. S. 10 Wall. 68 (19:839).

Messrs. **T. L. Chadbourne** and **L. H. Boutelle**, for appellees:

There is an enforceable trust against Helen Moore in favor of complainants.

Irvine v. *Irvine*, 76 U. S. 9 Wall. 617 (19:800); *Van Rensselaer* v. *Kearney*, 52 U. S. 11 How. 323, 326 (13:703); *House* v. *McCormick*, 57 N. Y. 321; *Bush* v. *Person*, 59 U. S. 18 How. 82 (15:273); *Smith* v. *Williams*, 44 Mich. 242; *De Wolf* v. *Haydn*, 24 Ill. 525; *Tefft* v. *Munson*, 57 N. Y. 97; *Smith* v. *Baker*, 1 Younge & C. Ch. 223; *Chew* v. *Barnet*, 11 Serg. & R. 389; *Way* v. *Arnold*, 18 Ga. 181; *Goodson* v. *Beacham*, 24 Ga. 150.

The Statute of Frauds of Michigan, excepts estates and trusts in real estate by act, operation or implication of law.

Huxley v. *Rice*, 40 Mich. 73; *Byrne* v. *Rood*, 54 Mich. 67; *Barber* v. *Milner*, 43 Mich. 248; *Patton* v. *Chamberlain*, 44 Mich. 5; *Newman* v. *Nellis*, 97 N. Y. 285.

The deed executed by McDonald and McKay to Moore and deposited with Viele was a compliance with the Statute of Frauds.

Urann v. *Coates*, 109 Mass. 581; *Hart* v. *Carroll*, 85 Pa. 508; *Parrill* v. *McKinley*, 9 Gratt. 1; *Bowles* v. *Woodson*, 6 Gratt. 78; *Jenkins* v. *Harrison*, 66 Ala. 352.

Moore could have obtained the title had he chosen so to do.

Fry, Spec. Perf. 2d. Am. ed. § 702.

As to the covenant of warranty, the rule is universal that no right of action arises under it except after an eviction or something which is equivalent.

Van Rensselaer v. *Kearney*, 52 U. S. 11 How. 297, 325 (13:703).

The allegation of offer to perform is merely formal.

Jenkins v. *Harrison*, 66 Ala. 352.

An oral agreement to establish rights in land at variance with the muniments of title must be clearly and satisfactorily proved.

Mundy v. *Foster*, 31 Mich. 313; *Shakespeare* v. *Markham*, 10 Hun, 311; *Bowen* v. *Bowen*, 2 Bradf. 336; *Cox* v. *Cox*, 26 Gratt. 805; *Kent* v. *Lasley*, 24 Wis. 654; *McClellan* v. *Sanford*, 26 Wis. 595; *Harter* v. *Christoph*, 32 Wis. 248; *Kercheval* v. *Doty*, 31 Wis. 491; *Pringle* v. *Dunn*, 37 Wis. 449; *Lavassar* v. *Washburne*, 50 Wis. 200; *Howland* v. *Blake*, 97 U. S. 626 (24:1028).

Laches cannot be imputed to infants.

Dragoo v. *Dragoo*, 50 Mich. 575; Tyler, Infancy & Coverture, 159.

[128] *Mr. Chief Justice* **Fuller** delivered the opinion of the court:

Had the conveyance of McDonald and McKay, lodged in Viele's hands, been actually delivered to Moore, no question would have arisen; but that deed having been suppressed or lost, when Moore subsequently induced McDonald and McKay to convey to his wife, for the avowed purpose of avoiding the deed he had given Monroe, Moore's wife being fully advised of the purpose and paying no consideration for the conveyance, the transaction must be regarded in equity as if McDonald and McKay had conveyed to Moore and Moore had conveyed to his wife, she holding in trust for Monroe and his heirs one half of the interest conveyed to her, namely, one sixth of the whole.

"Fraud, indeed, in the sense of a court of equity, properly includes all acts, omissions, and concealments which involve a breach of legal or equitable duty, trust, or confidence, justly reposed, and are injurious to another, or by which an undue and unconscientious advantage is taken of another. And courts of equity will not only interfere in cases of fraud to set aside acts done, but they will also, if acts have by fraud been prevented from being done by the parties, interfere and treat the case exactly as if the acts had been done." 1 Story, Eq. Jur. § 187.

Whenever the legal title to property is obtained through means or under circumstances "which render it unconscientious for the holder of the legal title to retain and enjoy the beneficial interest, equity impresses a constructive trust on the property thus acquired in favor of the one who is truly and equitably entitled to the same, although he may never, perhaps, have had any legal estate therein; and a court of equity has jurisdiction to reach the property either in the hands of the original wrong doer, or in the hands of any subsequent holder, until a purchaser of it in good faith and without notice acquires a higher right and takes the property relieved from the trust." Pomeroy, Eq. Jur. § 1053.

In *Huxley* v. *Rice*, 40 Mich. 82, it is said: "It is the settled doctrine of the court that [129] where the conveyance is obtained for ends which it regards as fraudulent, or under circumstances it considers as fraudulent or oppressive, by intent or immediate consequence, the party deriving title under it will be converted into a trustee in case that construction is needful for the purpose of administering adequate relief; and the setting up the Statute of Frauds by a party guilty of the fraud or mistake, in order to bar the court from effective interference with his wrong doing, will not hinder it from forcing on his conscience this character as a means to baffle his injustice or its effects." The fraud of which Moore was guilty was in preventing the conveyance to himself, which would have inured to Monroe, and in obtaining it to his wife, so as to reap the benefit which belonged to his grantee. Mrs. Moore stands in her husband's shoes, and by accepting with knowledge is to be treated as a party to his fraud and profiting by it, or as a mere volunteer, assisting him to perpetrate the fraud and to profit by it, and is hence to be held, as he could have been, a trustee *ex maleficio*. Nor do we see that the Statute of Frauds can be invoked as a defense. The fact that McDonald and McKay could not have been compelled to convey to Moore, because of the want of written evidence of their agreement to do so, does not entitle Mrs. Moore to object that they were not legally bound to do what they were morally, they having kept their faith with Moore by conveying under his directions. If McDonald and McKay had violated their agreement with Moore, and in furtherance of such violation had conveyed to a stranger, such grantee might have defended, even though cognizant of the verbal agreement of McDonald and McKay to convey to Moore;

but McDonald and McKay never repudiated their obligation to Moore, and conveyed as he directed, thereby, so far as he was concerned, carrying out the trust upon which they held one third of the land.

There is "no rule of law which prevents a party from performing a promise which could not be legally enforced, or which will permit a party, morally, but not legally, bound to do a certain act or thing, upon the act or thing be-
[130] ing done, to recall it to the prejudice of the promisee, on the plea that the promise, while still executory, could not, by reason of some technical rule of law, have been enforced by action." *Newman* v. *Nellis*, 97 N. Y. 285, 291; *Patton* v. *Chamberlain*, 44 Mich. 5; *Barber* v. *Milner*, 43 Mich. 248.

Mrs. Moore did not take as a stranger would have taken, but took in execution of the agreement with her husband. Clearly, then, she cannot be permitted to set up a statutory defense personal to McDonald and McKay, who could not, in fulfiling their agreement, transfer an excuse for nonfulfillment.

It is undoubtedly the rule that the breach of a parol promise or trust as to an interest in land does not constitute such fraud as will take a case out of the statute; *Montacute* v. *Maxwell*, 1 P. Wms. 620; *Rodgers* v. *Simmons*, 55 Ill. 76; *Peckham* v. *Balch*, 49 Mich. 179; but here McDonald and McKay did not fail to perform their promise, and when they performed, their grantee took one half of the one third, charged with a trust to hold it for Monroe by reason of the deed of Moore to Monroe, under the covenants of which Moore was equitably bound, when he acquired the title, to hold it for Monroe's benefit. That deed contained a general covenant of warranty.

In *Irvine* v. *Irvine*, 76 U. S. 9 Wall. 617, 625 [19:800, 802], *Mr. Justice* Strong, speaking for the court, said: "It is a general rule that when one makes a deed of land, covenanting therein that he is the owner, and subsequently acquires an outstanding and adverse title, his new acquisition inures to the benefit of his grantee, on the principle of estoppel;" and in *Van Rensselaer* v. *Kearney*, 52 U. S. 11 How. 297 [13:703], it was pointed out that it is not always necessary that a deed should contain covenants of warranty to operate by way of estoppel upon the grantor from setting up the after-acquired interest against his grantee, the court saying, p. 325, [715], "that whatever may be the form or nature of the conveyance used to pass real property, if the grantor sets forth on the face of the instrument, by way of recital or averment, that he is seised or possessed of a particular estate in the premises, and which estate the
[131] deed purports to convey; or, what is the same thing, if the seisin or possession of a particular estate is affirmed in the deed, either in express terms or by necessary implication, the grantor and all persons in privity with him shall be estopped from ever afterwards denying that he was so seised and possessed at the time he made the conveyance. The estoppel works upon the estate and binds an after-acquired title as between parties and privies."

The rule is thus stated in *Smith* v. *Williams*, 44 Mich. 242: "It is not disputed that a deed with covenants of seisin and title would be effectual to give the grantee the benefit of an after-acquired title, under the doctrine of estoppel; but these covenants were absent from the deed in question, and the covenant of quiet enjoyment, it is said, would not have a like effect. No reason is given for any such distinction, and it is not recognized by the authorities. When one assumes, by his deed, to convey a title, and by any form of assurance obligates himself to protect the grantee in the enjoyment of that which the deed purports to give him, he will not be suffered afterwards to acquire or assert a title and turn his grantee over to a suit upon his covenants for redress; the short and effectual method of redress is to deny him the liberty of setting up his after-acquired title as against his previous conveyance; this is merely refusing him the countenance and assistance of the courts in breaking the assurance which his covenants had given."

Conceding that a covenant of general warranty operates by way of rebutter to preclude the grantor and his heirs from setting up an after acquired title rather than to actually transfer the new estate itself, the subsequent acquisition creates an equity for a conveyance in order to make the prior deed effectual. *Noel* v. *Bewley*, 8 Sim. 108, 116; *Smith* v. *Baker*, 1 Younge & C. Ch. 223.

In *McWilliams* v. *Nisly*, 2 Serg. & R. 507, 515, Tilghman, *C. J.*, said that equity will enforce a covenant to convey an estate whenever it shall be acquired by the covenantor, and that the case is not the less strong where there is an absolute conveyance; and this is cited by Strong, *J.*, in *Bayler* v. *Commonwealth*, 40 Pa. [13
37, 43, wherein it is held that "Though a conveyance of an expectancy, as such, is impossible at law, it may be enforced in equity as an executory agreement to convey, if it be sustained by a sufficient consideration." So Gibson, *J.*, in *Chew* v. *Barnet*, 11 Serg. & R. 389, 392, says: "In the case of a conveyance before the grantor has acquired title, the legal estate is not transferred by the Statute of Uses; but the conveyance operates, as I have said, as an agreement, which the grantee is entitled to have executed in chancery, as was decided in *Whitfield* v. *Fauset*, 1 Ves. 391."

In *Way* v. *Arnold*, 18 Ga. 181, 193, Pyncheon, having no title, sold to Way with warranty, and, subsequently acquiring title, sold to Arnold. It was held that "If Pyncheon, upon consideration, conveyed this subsequently acquired interest, and such was his intention, equity will decree a title to the after-acquired estate, and the second grantee, Arnold, provided he purchased with notice, would be affected by said notice, and could not conscientiously hold the land in dispute."

In *Goodson* v. *Beacham*, 24 Ga. 150, Mims by warranty deed conveyed to Beacham, Mims having no title at the time, but subsequently acquiring it; Goodson claimed title under an execution sale; and the court say, p. 153: "Mims, when he made the deed to Beacham, had no title, but his deed was an attempt to convey the fee, and it was a deed with a warranty. This shows, *first*, that it was the intention that the land, the whole interest in the land, should be conveyed to Beacham; *secondly*, that Beacham had paid the purchase money. Such being the intention, the consequence would be, that if Mims should afterwards ac-

quire the title, he would be bound to convey it to Beacham, as much so as if the contract were one standing in the form of a bond for titles. Perhaps this would be the consequence, even without the warranty. *Taylor* v. *Dabar*, 2 Cas. in Ch. 212; 1 Cas. in Ch. 274; *Wright* v. *Wright*, 1 Ves. Sr. 409; *N. l* v. *Bewley*, 3 Sim. 103; *Smith* v. *Baker*, 1 Younge & C. Ch. 223; *Jones* v. *Kearney*, 1 Drury & War. 159, cited in note 2 Rawle, Cov. 438; Sug. Vend. chap. 8, § 2, p. 33; Rawle, Cov. 448."

Treating his deed as a covenant to convey, 133] Moore would have been precluded from denying the title, if the deed of McDonald and McKay had been made directly to him; and if, this being so, he could not call in question his own grant, he could not, by interposing a third person, taking without consideration and to enable the fraud to be carried into effect, in that way defeat it. It was the duty of Moore to take the conveyance for the benefit of Monroe, and Monroe had the right to the enforcement of that duty in equity, in view of the fraudulent device by which Moore attempted to avoid its discharge. The fraud was of such character as enables a court of equity to decree the relief as against the covenantor, not only under his own name but under the name of his wife; and it will not do, under such circumstances, to say that Monroe is remitted to an action for damages for breach of the covenant of warranty, because Moore not only had no title at the time but never afterwards acquired title; for when the conveyance was made to Mrs. Moore it was, as we have held, as if the title had been acquired by Moore himself. Nor is this a case wherein specific performance of the covenant of warranty is sought upon failure of title in the absence of fraud.

It is insisted that if the deed be regarded as a contract to convey, while in such case the heir would ordinarily be entitled to a conveyance from the vendor, yet if the vendor had no title, or if the vendee was not bound by the contract at the time of his death, the heir is not so entitled; but it appears from this record that Moore could have obtained the title in Monroe's lifetime, and the latter could have been compelled to perform on his part, so that the contract was binding at the time of Monroe's death, and his heirs had the right to compel specific performance. The vendor, therefore, would not be liable in one action to the estate, and in another to the heirs.

Monroe died in August, 1878. Moore and McDonald had settled in 1877 the matters which McDonald had given as reasons for not conveying, or for suspending the delivery of the deed placed in the hands of Viele, and McDonald was then ready to convey to Moore, which McKay had always been. Moore was able to perform before Monroe's death, and the right to compel performance which Monroe had his heirs can enforce.

134] It is strenuously urged that the deed of Moore to Monroe was set aside by agreement, and the purchase abandoned by the latter.

We agree with the learned judge of the circuit court in the conclusion at which he arrived in disposing of this contention. The evidence to make out such rescission practically consists of the testimony of defendant N. D. Moore, given on his own behalf. It is only when an oral agreement is clearly and satisfactorily proven by testimony above suspicion and beyond reasonable doubt, that it will be enforced to establish rights in land at variance with the muniments of title; and it is open to question "whether, in any case, after the decease of the grantee, the unaided testimony of the grantor alone, however intelligible and credible he may be as a witness, should be held sufficient to set aside and invalidate the title claimed under it." *Kent* v. *Lasley*, 24 Wis. 654. "Where a written instrument is sought to be reformed upon the ground that, by mistake, it does not correctly set forth the intention of the parties; or where the declaration of the mortgagor at the time he executed the mortgage, that the equity of redemption should pass to the mortgagee [is relied on]; or where it is insisted that a mortgagor, by a subsequent parol agreement, surrendered his rights, . . . in each case the burden rests upon the moving party of overcoming the strong presumption arising from the terms of a written instrument. If the proofs are doubtful and unsatisfactory, if there is a failure to overcome this presumption by testimony entirely plain and convincing beyond reasonable controversy, the writing will be held to express correctly the intention of the parties. A judgment of the court, a deliberate deed or writing, are of too much solemnity to be brushed away by loose and inconclusive evidence." *Howland* v. *Blake*, 97 U. S. 624, 626 [24:1027, 1028].

Tested by this rule, the evidence is manifestly insufficient to defeat the deed from Moore to Monroe. It must be conceded that the party interposing such a defense should be able to set it up with reasonable accuracy in his pleadings; and Moore's statement on the stand varies so much from that given in his answer as to make it impossible to indulge in any presumptions in its favor. The circuit court justly [135] comments on this conflict between answer and testimony (28 Fed. Rep. 831); but that ground need not be minutely gone over again here.

The consideration for the one sixth interest was two hundred and fifty dollars, ten dollars in cash and a note for two hundred and forty dollars.

Immediately before the purchase of the land in controversy, Monroe had let Moore have money to enter a particular forty acres which he represented had such indications of mineral as showed it would be valuable. Moore did not make the entry because, he says, the land had been previously entered, but he did not return the money to Monroe.

The forty acres was school land, and the minimum price of school lands was fixed by statute at four dollars per acre (Compiled Laws Michigan, 1872, Vol. 1, p. 1251), or, for forty acres, one hundred and sixty dollars, and the presumption, in the absence of evidence to the contrary, would be that this was the sum Monroe let Moore have—the purpose to make the particular entry being conceded.

Now, Moore's story as to the rescission is that Monroe came to him and "wanted me to pay him the money that he had given me to enter that land," and that in the conversation that ensued reference was made to the fact that Moore had not yet received a deed to the McDonald and McKay land, and it was finally

agreed that Moore should give Monroe his note for one hundred and sixty dollars and surrender Monroe's note for two hundred and forty dollars, and that Monroe should give up his deed; and Moore claims that the money which Monroe had given him to enter the forty acres of school land was one hundred and fifty dollars, and that the one hundred and sixty dollar note was made up of that one hundred and fifty dollars, and the ten dollars which had been paid on the purchase. When confronted with the fact that he had sworn that Monroe gave him the money to enter forty acres of school land, the minimum price of which was one hundred and sixty dollars, his explanation is that, as Monroe had to pay a discount to get the money, "I told him that I would throw off the ten dollars on that account," though why [136] Monroe could not borrow one hundred and sixty as well as one hundred and fifty dollars, if he borrowed at all, or why Moore should "throw off" ten dollars to the party who advanced the whole capital, or whether Moore had ten dollars to make up the deficiency (and he admits that he was then quite impecunious), does not appear.

Whether the money Monroe had let Moore have was one hundred and fifty or one hundred and sixty dollars, and whether the note included the ten dollars paid on the one sixth interest, depends on the testimony of Moore. Mrs. Monroe found the note among her husband's papers after his death, and knew nothing about it except that he told her that it was for money he had loaned Moore. The note itself was not produced; payments had been made upon it in Monroe's lifetime, but none afterwards until 1881, when sixty dollars was paid to Mrs. Monroe, who cannot remember what the amount of the note was; and this payment was after McDonald and McKay had conveyed to Mrs. Moore, at the request of Moore, for the purpose of cutting out the deed to Monroe, and after the land had commenced to increase in value, to Moore's knowledge but not to that of Mrs. Monroe. When it was made not a word was said to Mrs. Monroe about the outstanding deed to Monroe, either as to having it sent back or having a quitclaim given, and it is quite clear that she was wholly unaware of any connection between that note and the land in controversy, if any such connection in fact existed, as it would seem there did not, if the amount Monroe let Moore have to make the entry was one hundred and sixty dollars. Some small payments had been made on this note to a justice of the peace, in whose hands it had been lodged for collection. He was not sworn as a witness, but Moore is "inclined to think that he is dead." Under the circumstances, it is remarkable that the note when taken up by Moore was not preserved by him, and is not put in evidence. The money was not in fact loaned to Moore by Monroe, but given to him for a particular purpose, and when that purpose could not be effectuated, should have been returned at once. Monroe is dead. Is it not dangerous to take Moore's testimony, in face [137] of these facts, as establishing that the one hundred and sixty dollars covered the ten dollars forming part of the consideration of the purchase under consideration? We think it is, and, particularly, as in his answer Moore does not set up that the money was given him for the entry of a specified tract of forty acres, nor state any reason why it was one hundred and fifty instead of one hundred and sixty dollars, but says the money was furnished by Monroe to enter land, "if he should know of any that was desirable."

Equally unsatisfactory is the evidence as to Monroe's note for two hundred and forty dollars. Moore alleges in his answer that it was part of the agreement to rescind that he should cause this note to be surrendered to Monroe, and that one John McKay, in whose possession it was, "as he had been previously requested by said Nathaniel D. Moore," delivered the note to Mrs. Monroe, and it was canceled; but it is not to be questioned, upon the evidence, that the note was handed to Mrs. Monroe, not at the request of Moore at all, who knew nothing about it until a year, or perhaps nearly six years afterwards, but at her solicitation; and it was not only not canceled, but carefully preserved and produced upon the trial, a fact inconsistent with a rescission to be accomplished by its destruction, but entirely in accordance with Mrs. Monroe's testimony, that her getting the note was accidental, and that, as came out on her cross examination, when she showed it to her husband, he told her to "put it by." Such a direction on his part is irreconcilable with the theory that he had sent her to the McKays for the note because the bargain had been declared off, while it sustains the view that he had no intention to throw up the purchase. This note had been given to William McKay, according to Moore, to raise money on; failing in which, William had left it with his brother John, or his wife, who testifies he gave it to her "to keep or to give back to Mrs. Crawford (then Mrs. Monroe); *or to collect.*" Mrs. McKay was Mrs. Monroe's sister, and gave her the note, cautioning her that she must take care of it so as to produce it in case it was asked for by William McKay. This was in July, 1876, but Moore fixes the date of the conversation with Monroe as in August or September, or, as he finally believes, [138] early in October, 1876, which, if true, would show that Mrs. Monroe's possession of the note had nothing whatever to do with an agreement that it should be surrendered. Indeed, Moore does not contend that it had, but testifies that Monroe said he could get the note from the McKays, whom, however, Moore does not pretend he directed to deliver it. There is a direct conflict between Mrs. Crawford and the McKays, as to her statements at the time she took the note; but we are not inclined, therefore, to reject her account of the transaction, so far as bearing upon whether she had authority to act for her husband on that occasion or not. Granting that Mrs. Monroe was desirous of getting the note, because she feared Monroe would never obtain title, and considered Moore's deed worthless, this did not bind Monroe, and her statements could not be used for that purpose. It should further be observed that, while Moore avers in his answer, which he subscribed, that Monroe was to quitclaim to him, he states in his testimony that Monroe said he had not recorded the deed and would send it back, although the evidence discloses it was recorded December 20, 1875; and also that though Moore and Monroe lived at the time within

three miles of each other, yet Moore never asked Monroe either to quitclaim or return the deed, now giving as an excuse that he did not wish "to stir it up more than was necessary," and did not wish to urge him while the other note remained unpaid. If he was not entitled to demand a release until he had paid the one hundred and sixty dollar note, it would hardly be just to allow him to cease paying and not resume until years after, when the land had increased in value, and Monroe was in his grave, and then treat such payment to Mrs. Monroe, though he kept her in ignorance of any connection between it and the land, as performance of the alleged agreement of five years before.

Upon a careful examination of the evidence, it amounts to no more than this: Monroe expected and desired to obtain the land; he found that McDonald and McKay had not made a deed to Moore, and doubt was expressed whether they ever would. He wished to collect the money which Moore had wrongfully kept, and which had no relation to the other transaction. He retained possession of the two hundred and forty dollar note, so that Moore could not make use of it, not intending to cancel it, but to hold it for payment when Moore obtained the title. In accepting payments on the one hundred and sixty dollar note, he was only receiving what Moore originally owed him, assuming that the ten dollars was not included. If there ever was such an arrangement as contended for, it was evidently not to be carried out on the part of one unless or until carried out by the other, and was not carried out by either, and the payment of the sixty dollars to Mrs. Monroe, ignorant as she was of the facts, cannot be regarded as acceptance of performance. In any point of view in which this evidence can be considered, we do not feel justified in denying complainants relief upon the ground of an abandonment of the deed of Moore to Monroe.

[139]

In our judgment, the defense of laches is not made out, even if the minority of the heirs did not preclude it. The deed of McDonald and McKay to Helen Moore is dated December 16, 1880, and was recorded March 16, 1881. During all this time Mrs. Monroe and her children were living in Canada. Mrs. Monroe, when on a visit to Houghton County, in the summer of 1881, first learned that Moore disputed their title, and in the fall of that year she was advised by Mr. McKay to "hire a lawyer or attorney." She did so, and he wrote a letter to Moore, informing him of complainants' claim. Moore testifies as to its receipt that "it must have been in the fall of 1881 or in the spring of 1882. I am not sure of it."

February 8, 1882, this suit was commenced in the Circuit Court for Ontonagon County, Michigan. This cannot be held to be unreasonable delay. The answer of defendants averred: "It is only since said [mineral] discoveries, made at the expense of these defendants and said McDonald and McKay, that these complainants have claimed to have any interest therein;" but all that was done in developing the land was by the Cambria Iron and Steel Company, and no actual discoveries of ore had been made before the bill was filed.

Moore is asked by his counsel, and answers as follows: "*Q.* When was it first ascertained that the property had value beyond what you knew of at the time you first went over it for iron ore? *A.* The spring of '82 was the first developments that was made on that property by the Cambria Iron and Steel Company. They worked considerably on it in '81, but hadn't shown up anything until the spring of '82."

[140]

McDonald testifies: "We let an option to the Cambria Iron and Steel Company of Johnstown, Pa., to mine ore if they could find it; gave them a privilege of exploring for iron; if they found iron they was to pay us so much for the iron. . . That must have been in '81 . . . *Q.* About what time was it that they first developed mineral value there; that is, to show that there was mineral value there? *A.* Well, in the spring. I couldn't say what time that was, but it must have been in the following spring; . . . the following spring after we gave the option."

While this shows that Mrs. Monroe had no reason to suppose the land had increased in value when she began her suit, Moore from his knowledge of the property, and his being on the ground, must have been aware, when he paid Mrs. Monroe, and probably as early as when the deed was given to his wife, that the property was likely to improve in value. He says the option to the Cambria Iron and Steel Company was in 1880 or 1881, and if it was after his wife got her deed, it was *shortly after.* The inevitable inference from his conduct is that he did not ask McDonald and McKay to convey, and did not propose to pay up the note until roused into activity by the prospect of gain.

The bill and amendments state the deed from Moore to Monroe of one sixth of the land; that McDonald and McKay held "an undivided one third thereof in trust for the said Nat. D. Moore by an arrangement between the said McDonald and McKay, on the one side, and the said Moore, on the other, entered into before or at the time the said McDonald and McKay acquired said title;" that the conveyances by McDonald and McKay to Helen Moore "were made at the instigation of said Nat. D. Moore, with the intent and purpose of defrauding these complainants out of the estate in fee conveyed and assured, and intended to be conveyed and assured, to the said John Monroe by the said Nat. D. Moore as aforesaid, by lodging the apparent legal title in his wife's name, but for his own benefit and use;" "that the said Helen Moore paid no consideration for said conveyance, and that said interest vested in her as trustee for her husband, Nat. D. Moore and for the said John Monroe, his heirs and assigns;" that the deed to Helen was procured by said Nat. D. and said Helen to be made "for the purpose of cutting out complainants' title to the undivided one sixth of the said land and of depriving them thereof;" that the transaction "is and ought to be held to be of the same effect as if the said McDonald and McKay and their wives had conveyed said interest directly to the said Nat. D. Moore instead of to his wife, and that the said Moores, husband and wife, ought to be and are estopped by the terms of Moore's said conveyance to Monroe from claiming or asserting that, as to the one sixth interest in said land conveyed by

[141]

the said Nat. D. Moore to the said John Monroe, the said Helen Moore has any title or interest therein as against said complainants; and they further charge that as to said one sixth interest the title is in them by virtue of the premises; that at the time of said conveyance by Nat. D. Moore to John Monroe said Moore was unmarried, and that said Helen Moore gave nothing for either or any of said conveyances nor for said interest in said land; and that she took the same with full notice and knowledge of complainants' rights, obtained as aforesaid, by deed from said Nat. D. Moore to said John Monroe."

The original bill charged also that a conveyance was made by McDonald and McKay to Moore, and fraudulently suppressed before the conveyance to said Helen.

We think the allegations of the bill as amended are sufficient to support the decree.

McDonald and McKay held in trust for Moore, that is, upon the trust created by their obligation to convey to him on request; they not only did not deny the trust but conveyed on Moore's request to his nominee, and fraud is charged against Moore and his wife in procuring the conveyance to the latter.

[142] The prayer of the bill was "that the said Helen Moore be compelled by the proper decree of this court to execute and deliver a good and sufficient warranty deed or deeds of the undivided one sixth part of said premises to these complainants, in the proportions to which they are respectively entitled, as sole heirs of said Monroe;" and as there is enough in the bill as amended to warrant relief, and as the defendants could not have been taken by surprise, we do not think the decree should be reversed on the ground that the *allegata* and the *probata* do not sufficiently agree to justify it. It is true, there is no offer to pay the balance of the purchase money, but the case shows that a tender would have been but an empty show, and as the court had it in its power to require payment of the two hundred and forty dollar note, thus completing performance by Monroe, and as it did this by its decree, the allegation would have been merely formal and became immaterial.

The decree of the Circuit Court is affirmed.

---

[142] BULLITT COUNTY, *Plff. in Err.*,

v.

W. T. WASHER ET AL.

(See S. C. Reporter's ed. 142-152.)

Amendments, and order overruling motion for new trial, not reviewable—what facts necessary to appear of record—agents—Kentucky county court.

1. Amendments to pleadings are discretionary with the courts below and not reviewable here. An order of the court below overruling a motion for a new trial is not reviewable here.

2. Although a court of record can act only through its orders made of record, yet, when it is by law authorized to appoint an agent, it is not necessary that all the acts of the agent should appear of record.

3. The sole fact, that its proceedings, as a court of law, are of record, cannot deprive it of the power to appoint, by record, agents to make contracts and to transact business not of record.

4. In Kentucky, when any power is conferred or duty imposed by statute upon the county court, the term is understood to mean a court held by the presiding judge alone and not in conjunction with the justices, and should be held so to mean even when used in connection with fiscal matters, if it relates to mere ministerial duties.

[No. 132.]

Submitted Dec. 18, 1888. Decided March 11, 1889.

IN ERROR to the Circuit Court of the United States for the District of Kentucky, to review a judgment for plaintiffs in an action to recover damages for breach of a contract. *Affirmed.*

The facts are stated in the opinion.

Messrs. **D. M. Rodman** and *Frank P. Straus*, for plaintiff in error:

A statutory provision must be strictly construed.

Ventress v. *Smith*, 35 U. S. 10 Pet. 161 (9: 882); *Williams* v. *Peyton*, 17 U. S. 4 Wheat. 77 (4: 518); *Stead* v. *Course*, 8 U. S. 4 Cranch, 403 (2: 660).

No written or record authority to guaranty Jefferson County's part being alleged to have been given the alleged Bullitt County Commissioner, the authority must be presumed to have been verbal only.

Bradley v. *Lamb*, Hardin, 527; *Smith* v. *Fah*, 15 B. Mon. 443; *Hocker* v. *Gentry*, 3 Met. (Ky.) 474; *Byassee* v. *Reese*, 4 Met. (Ky.) 373.

Express statutory authority is required to authorize a county court to bind the taxpayers.

Bowling Green & M. R. Co. v. *Warren Co. Ct.* 10 Bush, 718; *Campbell Co. Ct.* v. *Taylor*, 8 Bush, 206; Dillon, Mun. Corp. § 104; *Pa. R. Co.* v. *St. Louis, A. & T. H. R. Co.* 118 U. S. 290 (30: 83); *Wells* v. *Pontotoc Co.* 102 U. S. 625 (26: 122); *Marsh* v. *Fulton Co.* 77 U. S. 10 Wall. 676 (19: 1040); *Nashville* v. *Ray*, 86 U. S. 19 Wall. 475 (22: 168).

When the adoption of any particular form or mode is necessary in the first instance to confer authority, there can be no valid ratification except in the same manner.

McCracken v. *San Francisco*, 16 Cal. 640; *Pratt* v. *Swanton*, 15 Vt. 147; *Chamberlain* v. *Dover*, 13 Maine, 466.

Defendant in error cannot claim to be innocent in the matter.

Marsh v. *Fulton Co.* 77 U. S. 10 Wall. 682 (19: 1042); *Salt Lake City* v. *Hollister*, 118 U. S. 263 (30: 178); *Hitchcock* v. *Galveston*, 96 U. S. 341 (24: 659); *Police Jury* v. *Britton*, 82 U. S. 15 Wall. 571 (21: 254).

There could be no ratification except by record.

Owings v. *Hull*, 34 U. S. 9 Pet. 629 (9: 246); *Fletcher* v. *Dysart*, 9 B. Mon. 415; Dunlap's Paley, Agency, 171, note q.

Unless the county court knew of that extraordinary document in Ridgway's hands and fully understood it, there was no ratification.

Owings v. *Hull*, 34 U. S. 9 Pet. 629 (9: 246).

Mr. **Augustus E. Willson** for defendants in error.

Mr. Justice **Lamar** delivered the opinion of the court: [143]

On the 31st of December, 1879, W. T. Washer, Jacob Danenhauer, and Peter Baecker commenced an action in the Circuit Court of the United States for the District of Kentucky

against Bullitt County, in that State, to recover damages for breach of a certain contract made between Washer and the county, and afterwards assigned by Washer to Danenhauer and Baecker, for the construction by Washer of a bridge over Pond Creek, between Bullitt and Jefferson Counties.

A demurrer to their original petition having been sustained with leave to amend, the defendants in error, on the 24th of March, 1880, filed an amended petition.

The original and amended petitions substantially aver that the County of Bullitt, by its duly authorized commissioner, entered into a written contract with plaintiff Washer for the erection by him of a bridge across Pond Creek according to specifications, at prices stipulated therein; that in this contract the county guarantied payment for the entire work; that the County Court of Bullitt County appointed com- [144] missioners, and notified Jefferson County thereof, requesting it to appoint commissioners to contract for the bridge; that beyond the appointment of such commissioners Jefferson County took no action looking to any co-operation of the two in the work; that thereupon, before the contract was made, the county court, the presiding judge and a majority of the justices of the county being present, decided that it was necessary to erect the bridge, and having exhausted all means provided by statute for securing the aid of Jefferson County in building it, decided to erect it upon the responsibility of Bullitt County alone; that thereafter on the 16th of July, 1877, the Bullitt County Court, composed as aforesaid, authorized its commissioner, J. W. Ridgway, to report any bids that might be offered, and the amount of the same, and authorized the county judge, W. Carpenter, to receive bids, and to accept or reject the same; that in pursuance of that order the county judge accepted the bid of Washer; that thereafter Ridgway, being thereunto authorized by an order of the county court, made and entered into the contract with Washer for the construction of the bridge, which contract was afterwards ratified by the county court, composed as aforesaid, and said court, by an order duly entered of record, directed the levy of taxes to pay for the work done under the contract, and the application of the money raised to the payment of the contractors; that Washer commenced work under that contract, and proceeded with it until he and his assignees were notified by the county to stop work upon the bridge; and that the defendant had failed to perform its contract, and to pay for work done thereunder, to the damage of plaintiffs in the sum of $5,325.14, for which sum they prayed judgment.

A demurrer to this amended petition was sustained by the circuit court, but upon writ of error from this court the judgment was reversed and the case remanded. *Washer* v. *Bullitt County*, 110 U. S. 558 [28:249]. The question raised by the pleadings in that case was, whether Bullitt County had, under the statutes of Kentucky, authority to make the contract sued on, by which, according to the averments of the declaration, it undertook, at its own cost, to build across a boundary stream a bridge, one end of which was within another county.

[145] This court held that the power given by the Kentucky statutes to adjoining counties to construct bridges across boundary streams at joint expense did not take away the common-law right of each of the counties to construct such bridges at its sole cost.

It also held, in effect, that the allegations of the petition and amended petition, being admitted to be true by the demurrer, the contract sued on must be held to have been made under that section of the statutes which confers upon the county court jurisdiction to erect public buildings, bridges and other structures, and not under the section providing for the joint action of contiguous counties, as was contended on behalf of the plaintiff in error; and that therefore the averments of the petition disclosed a right of action in the plaintiffs.

Upon the return of the case to the circuit court, Bullitt County filed an answer specifically denying the truth of every material allegation of the petition and amended petition, the chief and controlling defense being that the contract sued on was not the contract of Bullitt County. As a part of its answer the county filed a complete transcript of the orders of its county court. Plaintiffs replied to the answer, and afterwards, with the leave of the court and against the defendant's objection, filed a second amended petition. Issue was joined, and the case was tried by a jury, resulting in a verdict for the plaintiffs for the full amount claimed by them, upon which judgment was rendered. A motion for a new trial having been overruled, this writ of error was thereupon sued out.

The first assignment of error, namely: that the court erred in allowing the second amended petition to be filed, has been so frequently considered and declared unfounded by this court that it may be dismissed with the remark that amendments are discretionary with the court below, and not reviewable here. See the opinion of the court in the case of *Chapman* v. *Barney*, decided March 5, 1889 [*ante*, 800], and the authorities there cited. The same remark applies to the assignment that the court erred in overruling a motion for a new trial. *Arkansas Valley Land & Cattle Co.* v. *Mann*, decided March 5, 1889 [*ante*, 854], and the cases there cited.

The leading assignments of error substanti- [146] ally present but one proposition, to wit: conceding that the county had the power to build the bridge (as was determined by this court on the former writ of error), the averments of the plaintiff's petition were not sustained by the evidence adduced at the trial, and the contract sued on was not made by the county in the mode provided by law.

The statute law of Kentucky applicable to such contracts made by a county is found in art. 17, § 1, ch. 28, of the General Statutes of that State:

Sec. 5. "The county court is a court of record." (Page 307.)

Sec. 9. "The records of the county court shall at all times show by whom the court is holden. When the justices of the peace compose a part of the court the records must state the names of those who take their seats; and when a member leaves the bench his absence must be noted."

Sec. 1, Art. 3, chap. 27. "The county

court, except for the County of Jefferson, unless composed of a majority of the justices of the peace of said county in commission, shall not have the power to make appropriation of the county revenue or levy, or to make any charge thereon greater than fifty dollars for any one object."

It is contended that the contract sued on was not made in conformity with those requirements; that it was neither made nor authorized by the county court, composed of the county judge and a majority of the justices of the peace of the county; and that there is no record of the county court so constituted, showing that the contract was, as a matter of fact, authorized to be made.

In order to test the soundness of this position, it is necessary to consider the entire rec-
[147] ord taken together. In the first place, it cannot be denied, indeed, the plaintiff in error concedes, that there are a number of orders which, even *quoad hoc*, come up to the requirements of "orders of record," and "of the court properly constituted," having been made when a majority of the justices were present.

Among these are—

First. The order of June 18, 1877. This order recognized Ridgway as commissioner; it adjudicated the necessity of erecting the bridge; it adopted the Brawner site for that bridge; and it appointed Ridgway a commissioner to confer with a commissioner from Jefferson County concerning plans and specifications, and cost.

Second. The order of July 16, 1877. This order appropriated $600 for the building of the bridge at the Brawner site; it directed the commissioners to report plans and specifications, and the bids made; it authorized the County Judge (W. Carpenter) to receive bids and to accept or reject the same as he might think proper, looking to the interest of the two counties.

Third. The second order of November 19, 1877, which appropriated $600 for the bridge.

Fourth. The order of November 18, 1878. This order showed a levy of a tax on the taxable property of the county for the purpose of paying for the bridge; a recognition of Washer as contractor for building the bridge and of Danenhauer and Baecker as his assignees; and an allowance to them, as such assignees, in part payment of the bridge.

Fifth. The order of November 18, 1879. This order appointed a committee to examine the work on the bridge, and to report.

Sixth. The order of January 19, 1880. This order confirmed the committee's report and discharged the committee.

Such is that portion of the record which is admitted to be the record of the court "properly constituted." It is claimed that the record is defective in the following particulars:

It gave neither the judge nor the commissioner power to contract; although it is conceded that the power was given to the county judge to accept bids. The alleged contract does not appear to have been reported to the
[148] court; nor was there any note of record that it was made by Ridgway; nor was the contract ever filed; nor does it show that the county judge accepted it. And lastly, while the record shows a knowledge of the fact that a contract existed, and was with the defendants in error, yet it does not show a knowledge of the fact that the contract assumed to bind Bullitt County for the whole cost.

Now, inasmuch as the record does show affirmatively an adjudication of the necessity of the contract; an appropriation for the preliminary work; the appointment of an agent (Carpenter) to make the contract; and a recognition of the contract by directing the levy of taxes to pay the contractor and his assignees for the work done—we do not think it necessary, in order to fix a liability upon the county that the record should also show, affirmatively, the existence of those outside incidents which, as enumerated, it does not set out.

The case of *Mercer County Court* v. *Kentucky River Navigation Co.* 8 Bush, 300, much relied on and quoted from by counsel for plaintiff in error, is, as a brief analysis will show, inapplicable to the controversy in the present case.

An Act of the Kentucky Legislature, passed in 1865 to incorporate the Kentucky River Navigation Company, provided in one of its sections: "That the county courts of the several counties bordering on the Kentucky River, . . . may on the application of the corporation named, . . . a majority of all the justices of the peace being present, subscribe stock in said company, and levy a tax on all taxable property of said county sufficient to pay the whole amount of said subscription in three years from the time it was made, which tax shall be collected in all respects as taxes for state revenue are now collected." The Mercer County Court, a majority of the justices being present, made an order "that the sum of seventy-five thousand dollars be directed to be subscribed," and appointed one Joseph A. Thompson a commissioner to subscribe the same in the Kentucky River Navigation Company. The Garrard County Court in like manner made an order that the sum of one hundred thousand dollars should be subscribed on the part of Garrard County and also appointed an agent to subscribe the same in said [14
company. In pursuance of said orders the subscriptions were made by the persons appointed, on the books of the company, for and on behalf of each of said counties by its agent. The court held that the above orders and subscriptions were not binding, and did not amount to contracts of subscription, because the county court had no authority under the statute to appoint a commissioner or agent to make the subscription.

The decision was simply that, where the county court, assuming to act under a special statute, whereby was delegated to that court the extraordinary power of determining whether a county should subscribe in aid of the Navigation Company, and of making such subscription, undertook to appoint an agent to make the subscription, such appointment was void as being unauthorized by law. The whole question was, as to the power to appoint the agent; and the court held that, as no such power to appoint existed, the court could not bind the county, except by an order which itself amounted to a subscription, and which must be made, as evidenced by the record alone, when a majority of the justices were present. The court, however, clearly recognized the principle

that it was legally possible to imply a subscription from the subsequent adoption and ratification by a full court of the act of Thompson.

Now, in the case at bar, the power to appoint an agent or commissioner is undeniable, and is not challenged. On the contrary, it is admitted. So also is it shown that the agent (Carpenter) was appointed. And, as we have seen, one of the orders of the court imports upon its face a knowledge of the contract made by its commissioner, and amounts to a ratification of such contract.

The well settled maxim that a court of record can act only through its orders made of record, when applied to judicial proceedings, means that where the court must itself act, and act directly, that action must always be evidenced by the record. But in this instance, where a body has large administrative and executive powers, and is by law authorized to appoint agents, the principle cannot be so extended as to mean that all the acts of its agents shall appear of record.

[150] The county court of Kentucky is, by the statute of that State, constituted the executive body of the county, and invested with the important and usual powers of a county to keep in repair public buildings, bridges, and other structures, and to superintend the same, over highways and ferries, provision for the maintainance of the poor, the laying and collecting of taxes, the appropriation of the county revenue, the appointment of many county officers, and to manage all the fiscal affairs of the county, with many other powers, not less important, appertaining to the administration of county government. The sole fact that its proceedings as a court of law are of record cannot, in our opinion, deprive it of the power to appoint, by record, agents to make contracts, and to transact business not of record.

With regard to the contention that the commissioner exceeded the authority given by binding Bullitt County to pay for the entire work, an examination of the county record shows that whilst the court sought to secure joint action with Jefferson County in building the bridge, it determined to proceed without that county, if necessary. Especially is this shown by the order of July 16, 1877, authorizing Carpenter alone to accept bids without the cooperation of Jefferson County.

But this point is disposed of by this court in its decision on the demurrer above mentioned: "Nothing further," says the court, "could be done under sections 36 and 37. Bullitt County, therefore, fell back upon the power conferred by section 1 of article 16, chapter 28, *and made a contract by which it became responsible for the entire cost of the bridge.* Its power to do this, we think, was clear." 110 U. S. 566, 567 [28: 251, 252].

It is contended that the court erred in admitting, as evidence of the breach of the contract by Bullitt County, the letter of the presiding judge of the county court to Washer notifying him to stop all work upon the bridge immediately, or that proper proceedings will be instituted to stop the same.

The ground upon which this objection rests is, that the power to direct the contractor to discontinue the work resided only in the county court, composed of the county judge and a majority of the justices, and that the court so [151] composed could authorize such notice only by an order to that effect entered of record.

We do not concur in the proposition that such action of the county court, evidenced by its record, was necessary to authorize the presiding judge to direct the contractor to stop the work. When that court, constituted as the law requires for such purpose, and in the manner prescribed, entered into the contract sued on, and charged the county with the amount specified therein, its jurisdiction in that special mode of organization extended no farther. It then became the legitimate province of the county court, held by the county judge alone, to superintend and control the erection of the structure. According to the settled course of decisions in the highest court of Kentucky, the justices of the peace do not form a necessary part of the county court, except when sitting as a court of claims, or when engaged in appropriating the revenues of the county, levying taxes, laying charges upon the county, submitting questions of taxation to a popular vote, and making subscriptions to stock in railroads. Upon no other occasion, and with reference to no other matters, is the concurrence of the justices of the peace necessary. Gen. Stat. Ky. 273, c. 27, art. 3, § 1; *Id.* 306, c. 28, art. 17, §§ 1 and 2. All the powers of the court, which do not come within these enumerated exceptions, are exercised exclusively by the county court presided over by the county judge alone. Gen. Stat. Ky. 304 to 307, inclusive. And, as a general rule, when any power is conferred or duty imposed by statute upon the county court, the term is understood to mean a court held by the presiding judge alone, and not in conjunction with the justices, and should be held so to mean even when used in connection with fiscal matters, if it relates to mere ministerial duties. *Bowling Green & M. R. Co.* v. *Warren County Court*, 10 Bush, 711; *Meriwether* v. *Muhlenburg County Court*, 120 U. S. 354, 357 [30: 653, 654] and cases there cited.

When, therefore, Washer received the formal and official notice to stop work, signed by the judge of the county court and the county attorney, he was not bound, before obeying it, to examine the records of that court to ascer- [152] tain whether it was authorized by an order made by the judge in conjunction with the justices and duly entered of record; but he was justified in stopping immediately, as directed, and in resorting to his action upon the contract. We are of opinion that no principle of law or of fair dealing is violated by holding a municipal corporation to a contract thus made within its lawful powers and by its lawfully constituted authority.

For these reasons the judgment of the Circuit Court is affirmed.

SQUIRE B. RUDE *et al.*, Admrs., *et al.*, [152]
Appts.
v.
JOHN M. WESTCOTT *et al.*, Exrs.

(See S. C. Reporter's ed. 152-167.)

Assignment of letters patent—provisions of, as to profits—power of attorney in same—effect of—

trustee—sales of licenses, when measure of damages—royalty—actual damages.

1. A provision, in an absolute assignment of letters patent made by the patentee, that the net profits arising from sales, royalties, settlements or other source, are to be divided between the parties to the assignment so as to give the patentee one fourth thereof, does not, in any respect, modify or limit the absolute transfer of title.

2. A clause in such assignment, appointing the assignees attorneys of the assignor with authority to use his name in the management of the business, does not restrict in any way the power of the assignees after the transfer of the property.

3. The assignees do not hold the property under such an assignment as trustees for the benefit of the patentee: they are only trustees for him of one fourth of the profits which may be received by them.

4. Where there has been such a number of sales, by a patentee, of licenses to make, use and sell his patents as to establish a regular price for a license, that price may be taken as a measure of damages against infringers; but sales of licenses made at periods years apart will not establish any rule on the subject nor determine the value of the patent.

5. In order that a royalty may be accepted as a measure of damages against an infringer, it must be paid or secured before the infringement complained of and it must be paid by such a number of persons as to indicate a general acquiescence in its reasonableness and it must be uniform.

6. Actual, not speculative, damages must be shown and by clear and definite proof to warrant a recovery for the infringement of a patent.

[No. 187.]

Argued March 7, 1889. Decided March 18, 1889.

APPEAL from a decree of the Circuit Court of the United States for the District of Indiana, in favor of complainants for damages for infringement of patents. *Reversed.*

[153] Statement by *Mr. Justice* **Field:**

The original complainants, John W. Westcott and Charles W. West, allege in their bill that they are the owners, by assignment from the patentee, of two patents to Hiram Moore for improvements in seeding machines, one issued November 20, 1860, and extended for seven years from November 20, 1874, and the other issued March 28, 1861, for seventeen years; that since the assignment the defendants have made, used, and sold seeding machines in the District of Indiana, and in various other places in the United States, without the consent or license of the complainants and in infringement of their patents; and that the defendants are still engaged in such unlawful acts. The complainants therefore pray that the defendants may upon their best knowledge and information answer as to the matters alleged, and be compelled to account for and pay to the complainants the profits acquired by them and the damages sustained by the complainants, and be enjoined from making, using and vending the said machines, or any part thereof, or any seeding machine made in accordance therewith, or similar to those heretofore made, used and sold by them. The bill was filed in March, 1876. An answer was filed in June following, in which the defendants admit that they have been and are engaged in the manufacture and sale of seeding machines, but deny that they infringe either of the patents or any of the rights of the complainants under them, or that the complainants have been thereby deprived of any profits. They also deny that Hiram Moore was the first and original inventor of the alleged improvements described and claimed in the patents, and designate several patents previously issued which, as they allege, embody the substantial and material parts of the invention claimed.

In March, 1881, an amendment to the answer was allowed, in which the defendants deny that the complainants have such title to the patents as to enable them to maintain the suit against the defendants, setting up that on the 10th of November, 1874, the complainant Westcott, by an instrument in writing, assigned [154] to Isaac Kinsey and Aaron Morris an undivided part of his interest in the patents, which instrument is recorded in the Patent Office of the United States, and that on the 4th of February, 1879, the said Isaac Kinsey assigned one twelfth interest in the patents to one Lowell L. Lawrence and the Wayne Agricultural Company, which assignment is also on record in the Patent Office.

A replication to the answer having been filed, proofs were taken, and among other things the assignment by Moore, the patentee, to the complainants, and the assignment by Westcott to Kinsey and Morris, mentioned in the bill and answers were produced. They are as follows, omitting such parts as are not material to the questions presented:

Assignment of Moore to Westcott and West and contract between them.

"This agreement made this sixth day of October, Anno Domini one thousand eight hundred and seventy-four, by and between Hiram Moore, residing near Ripon, in the County of Fond du Lac, and State of Wisconsin, party hereto of the first part; Charles W. West, of Cincinnati, in the County of Hamilton, and State of Ohio, party hereto of the second part, and John M. Westcott, of Milton, in the County of Wayne, and State of Indiana, party hereto of the third part, witnesseth:

"That whereas sundry letters patent of the United States heretofore have been granted to said Moore, which said letters patent are respectively numbered, entitled, and dated as follows to wit: No. 30,685, dated November 20th, 1860 and entled, 'Improvement in Seed-Drills,' and No. 31,819, dated March 26th, 1861, and entitled 'Improvement in Seed-Drills;' and whereas the said Moore is justly indebted unto the said Charles W. West in the full sum of ten thousand dollars, for money advanced to aid him, the said Moore, in perfecting his inventions, and is desirous of securing the repayment of the same; and whereas the said Westcott is desirous of acquiring an interest in the inventions and letters patent aforesaid, and in any reissue, renewal, or extension thereof: Now, therefore,

"Know all men by these presents, that, for and in consideration of the premises, and of the [155] sum of five dollars in lawful money, to me in hand, by the said Westcott and West, before the execution hereof, paid, and of other valuable considerations, me thereunto moving, I, the said Hiram Moore, do hereby assign, sell, and set over unto the said Charles W. West and John M. Westcott the entire right, title, and interest in and to the letters patent aforesaid, and in and to the inventions and improvements represented, shown, or described therein, including any renewal, reissue, or extension thereof, the same to be held and enjoyed by

the said West and Westcott, and their legal representatives, as fully and entirely as the same would have been held and enjoyed by me had this assignment and sale not been made, to the full end of any term or terms for which the letters patent aforesaid, or either of them, have been, or hereafter may be, granted, reissued, renewed, or extended.

"I hereby further agree to sign such lawful papers, and do such lawful acts as may, by the counsel learned in law, of the said West and Westcott, be deemed necessary or expedient in order to obtain an extension or reissue of the patents aforesaid, or to assert, maintain, or defend the rights secured by said letters patent. It is expressly understood, however, that the costs and charges of the proceedings aforesaid shall be defrayed by said West and Westcott, as hereinafter provided.

"In consideration of the premises, I hereby further make, constitute, and appoint the said Charles W. West and John M. Westcott my true and lawful attorneys in law and in fact, with power irrevocable, giving and granting to them full and exclusive and unreserved power and authority, for me and in my name, place and stead, to assume and take upon themselves the entire and exclusive management and control of the aforesaid letters patent, and of each and every one of them, and to dispose of all the rights, title and interest which I have under the same, and under each and every of them, for such price or prices, upon such terms, and to such persons, and for such place or places, as they, my said attorneys, shall deem proper, and in my name, place and stead, and as my own proper act and deed, to sign, seal, [156] deliver and acknowledge all such deeds and instruments of writing as shall be necessary or proper for the granting or licensing to others the said rights under the said letters patent, and to each and every of them, and to ask, demand, sue for and receive the price of fees, or any part or parts thereof, paid or payable for such grants or licenses, and in my name to execute and deliver receipts and acquittances therefor, and in my name to bring to account and reckoning, and to ask, demand, sue for and recover and receive of and from all and any person whomsoever, who may have been, or may be, manufacturing or selling said drills containing the improvements aforesaid, or by any or either of them, such reasonable price or fee for such use of said improvements, or either of them, as my said attorneys shall deem proper and reasonable, . . . and generally to do and perform, and execute in my name as aforesaid, all and whatever other acts, matters, and things that they may deem expedient and requisite, or may be advised to do in and about the premises, as fully and effectually, to all intents and purposes, as if I myself were present and did the same, I, the said Hiram Moore, hereby ratifying, allowing and confirming, and agreeing from time to time, and all times hereafter, to ratify, allow and confirm as good and valid all and whatsoever the acts, matters and things which my said attorneys, or their substitute, shall lawfully do, or cause to be done, in and about the premises, by virtue of these presents.

* * * * *

"The said John M. Westcott, for his part, agrees, at his own cost and charges, to procure the extension of said letters patent, November 20, 1860, now pending, if practicable, including the expenses already incurred as well as those which hereafter may be incurred in said behalf, which sum is to be paid absolutely whether said extension is granted or not, and in no event is any part of said sum to be reclaimed from or refunded or repaid by said Moore, or to be deducted from the sum or sums collected under said patents.

"It is hereby covenanted and agreed, by and between the parties hereto, as follows: That from the sum or sums collected under the letters patent aforesaid, from sales, royalties, or [157] settlements, or from any other source, shall first be deducted the costs, charges, and expenses of collecting the same, including all litigation expenses save those of the extension application, and then the net profits or receipts shall be divided among the parties hereto as follows: To Hiram Moore, or his legal representatives, one fourth part; to C. W. West, or his legal representatives, one fourth part; to John M. Westcott, or his legal representatives, one half part. In case of loss or failure to realize any profit under said patents, all litigation expenses aforesaid are to be paid by said Westcott, it being expressly understood by the parties hereto that under no circumstances are said Moore or West to incur any obligation, or be under any liabilities for said expenses. It is further agreed that John M. Westcott is to make no charge for his own time spent in this behalf, nor is said West to make any charges for his services.

"It is also expressly understood that said Moore's interest is to continue during and throughout the extended time of the patent of November 20, 1860. Should such extension be granted the parties hereto hereby agree in good faith to perform the covenants between them made.

"In testimony whereof, the parties hereto have affixed their hands and seals, the day and year first above written.

"In presence of HIRAM MOORE.
"Wm. D. Baldwin. C. W. WEST. [Seal.]"
"Mary T. Palmer. J. M. WESTCOTT.

Assignment of Westcott to Morris and Kinsey, and contract between them.

"Whereas, heretofore, to wit, October 6th, 1874, Hiram Moore, of Fond du Lac County, Wisconsin, Charles W. West, of Cincinnati, Ohio, and John M. Westcott, of Milton, Indiana, entered into a contract and article of agreement in relation to certain improvements in grain-drills, for which letters patent have been issued to said Moore, No. 30,685, dated November 20th, 1860, and No. 31,819, dated March 26th, 1861, in which agreement amongst other things, the said Moore assigns and conveys to said West one fourth, and to said West-cott one half, and retains to himself one fourth [158] of said interest, contained in said letters patent, for said improvements in said grain or seed-drills;

"In said assignment, said Westcott, on his part, agrees, at his own cost and charges, to

procure the extension of said letters patent of November 20th, 1860, including expenses already incurred, as well as those that may hereafter occur, in said behalf, to be paid whether such extension be granted or not, and in no event is said sum, or any part thereof, to be reclaimed from or refunded by said Moore, and that from sums collected under said letters patent, from sales, royalties, or settlements, or from any other source, shall first be deducted the costs, charges and expenses of collecting the same, including all litigation expenses, save those of the extension application, and then the net profits, or receipts, shall be divided among said parties; to said Moore one fourth, said West one fourth, and said Westcott one half part. In case of loss or failure to realize any profits under said patent, all litigation expenses aforesaid are to be paid by said Westcott, said Moore or West to be under no liabilities for said expenses. Said Westcott is to make no charge for his own time spent in this behalf, nor is said West to make any charge for his services; said Moore's interest is to continue during and throughout the extended term of the patent of November 20th, 1860, should such extension be granted;

"And whereas, in consideration of the foregoing, Isaac Kinsey and Aaron Morris, of Milton, in Wayne County, Indiana, are desirous of obtaining an interest in said letters patent, they hereby agree to and with said John M. Westcott, of the same place, to severally take an equal interest with him in the same;

"Therefore, this article of agreement witnesseth: That said John M. Westcott hereby agrees to and with said Isaac Kinsey and Aaron Morris, and does hereby set over and assign to each of them one third part of his one half interest, retaining one third part himself in said letters patent; and said Kinsey and Morris, full understanding the original agreement mentioned, do hereby agree to and with said Westcott, to [159] be at one third expense each with said Westcott, jointly, as set forth in said agreement, and shall be equally entitled—and receive one third profit or proceeds, if any, in said one half interest, and in all things pertaining hereto to be governed by this and the original contract and agreement.

"In witness whereof, we have hereunto set our hands and affixed our seals, this 10th day of November, 1874.

"J. M. WESTCOTT. [Seal.]
"ISAAC KINSEY. [Seal.]
"AARON MORRIS. [Seal.]"

In May, 1881, the case was brought to a hearing on the pleadings and proofs, and the court held that the patents to Moore were valid; that he was the original and first inventor of the improvements specified in them, and that the title to them was vested in the complainants; that the defendants had infringed the first and second claims of the patent of 1860, and the sixth claim of the patent of 1861, and that complainants were entitled to recover the profits and gains which had accrued to the defendants from the manufacture, use, and sale of the improvements specified in those claims; and ordered a reference to one of the masters of the court to ascertain, state, and report an account of the gains and profits which the defendants or either of them had received by infringing the said claims, as well as the damages the complainants had sustained thereby.

The master thereupon proceeded to comply with the order, and on the 6th of December, 1883, made his report to the court. That report is not contained in the record, but from references to it, and quotations from it in the opinion of the court in considering exceptions taken to it, it appears that he reported that the complainants waived all claim for profits, and relied upon the proofs produced as establishing a fixed license fee or royalty as the measure of damages. After stating the testimony of the witnesses who had been examined on the point, he said that it was very difficult to determine from this evidence whether it made proof of such an established royalty or license fee as furnished a criterion upon which to estimate complainants' damages.

The proof on the subject of damages was [1 thus stated in his report:

"It is proved that the Wayne Agricultural Company paid the royalty of $1 for one-horse machines and $2 for two-horse machines for four years—a sum which, in the absence of evidence to the contrary, may be regarded as reasonable. Mast & Co. paid between $2,000 and $3,000 in cash and conceded privileges, which Westcott estimates to have been worth as much more, for infringement. It is true Westcott threatened suit, and when money is paid under threat of suit merely as the price of peace, it furnishes no evidence of the amount or value of the real claim in dispute; but the settlement made shows that Westcott was paid something substantial for the infringement, and that the fear of litigation was a small element of the settlement itself.

Westcott says that he arrived at the amount by his estimate of the number of the machines made by Mast & Co. and other considerations which are explained in Mast's deposition. Mast says no estimate was made of the number of machines." "Westcott says he gave licenses like the one attached to his deposition to Mast & Co., and to English & Over. Mast was examined but not interrogated on that point. Mr. English, the active man in the firm of English & Over, says he does not recollect whether they took a license or not."

Notwithstanding the difficulty expressed by him, the master reported that the defendants had made and sold 800 infringing one-horse machines, and that complainants' damages on that account were $800; and that defendants had made and sold 800 infringing two-horse machines, and that complainant's damages on that account were $1,600, making $2,400 damages in full. The court, after a full consideration of the exceptions, came to the conclusion that without further evidence the complainants were entitled to only nominal damages, and entered an order that the case be recommitted to the master, with directions to admit further evidence as to damages, and to report the same, with his conclusions of law.

On the 23d of April, 1885, the master made a second report, in which among other things he stated that the additional evidence taken by [1 him did not strengthen the proofs previously made in support of the claim that the complainants had established a license fee, or roy

alty, which furnished a criterion by which to estimate the damages. He found that between 1870 and May 1881, the defendants had made and put on the market about two thousand drills which infringed "the elements of the combination covered by the first claim," one half of which were one-horse and one half two-horse drills. He then considered the value of the claim or combination to defendants, who had used it in violation of complainant's rights, and stated that the evidence on this subject was conflicting; that some of the manufacturers considered it of so much value that during the life of the patent they had paid a stipulated license for its use, and that afterwards they said it was worth very little if anything, and that it might be true that its value had been impaired and destroyed by new devices and improvements; and that the value of the combination as estimated by the witnesses varied from nothing to six dollars per drill. He therefore reported that complainants were entitled to damages for 1,000 one-horse drills at 75 cents each, and 1,000 two-horse drills at $1.50 each, making in all $2,250; but how he arrived at the conclusion that seventy-five cents on each drill of one class, and one dollar and fifty cents on each drill of another class, were the actual damages sustained, nowhere appears.

Exceptions were taken to the report on various grounds, and among others: That the findings were based on speculation, and were only guesses, both as to the number of infringing drills and as to the value of the claim infringed; and that it failed to state any definite facts or evidence as a basis or ground for the findings. In July, 1885, the court decreed that the complainants were entitled to recover $1,800 for the damages sustained, and that so far as the master's report was inconsistent with that decree, the exceptions to it were sustained, but in other respects the exceptions were overruled. From this decision the appeal is taken.

Pending the suit Charles W. West, one of the complainants, and George W. Rude and John R. Rude, two of the defendants, died, and the bill was revived by the substitution of the executors of West in his place, and the administrators of George W. Rude in his place, and the executor of John R. Rude in his place.

[162]

Messrs. L. Hill and **Arthur Stem,** for appellants:

An estate may merge for one part and continue for the remaining part.

4 Kent, Com. 101; 3 Preston, Conv. 88, 89.

The merger is coextensive with the interest merged, as in the case of joint tenants and tenants in common, and it is only to the extent of the part in which the owner has two several estates.

4 Kent, Com. 100; 3 Preston, Conv. 88, 89.

Where the legal equitable interests unite in the same person, they always merge in law, and will merge in equity unless the purposes of justice or the intent of the parties are against it.

4 Kent, Com. 102; Hill, Trustees, 252 and authorities cited in note thereto.

Where the estate becomes vested in trustees, one of whom is to take a beneficial interest in the trust property, he takes an absolute estate to the extent of such interest; and that interest may be seized and sold under execution.

Bolles v. *State Trust Co.* 27 N. J. Eq. 308; *Wills* v. *Cooper*, 25 N. J. L. 137; *Mason* v. *Mason*, 2 Sandf. Ch. 433.

Where a patent issues to two persons, jointly, and one of them afterwards dies, the share of the deceased patentee does not go to the survivor, but to the heirs of the decedent.

Northwestern Fire Extinguisher Co. v. *Phila. Fire Extinguisher Co.* 6 Pat. Off. Gaz. 34; *Whittemore* v. *Cutter*, 1 Gall. 431.

The assignees of a patent take as tenants in common, and not as joint tenants.

Curtis, Patents, § 186, 192; Hindmarch, Pat. 67, 68, 236, 252; *Parkhurst* v. *Kinsman*, 2 Blatchf. 72; 1 Blatchf. 488, 496; *Clum* v. *Brewer*, 2 Curt. 506; *Vose* v. *Singer*, 4 Allen, 226; *Mathers* v. *Green*, 1 L. R. Ch. App. 29; *Dunham* v. *Indianapolis & St. L. R. Co.* 7 Biss. 223, 9 Chicago Legal News, 55; *Herring* v. *Gas Consumers Asso.* 13 Pat. Off. Gaz. 637.

Any undivided interest is assignable.

R. S. § 4896; *Potter* v. *Holland*, 4 Blatchf. 206; 1 Fish. Pat. Cas. 327; *Parker* v. *Haworth*, 4 McLean, 370.

It makes no difference that the assignment took place before the extension of the patent was granted.

Nicholson Pavement Co. v. *Jenkins*, 81 U. S. 14 Wall. 456 (20: 778); *Clum* v. *Brewer*, 2 Curt. 506; Curtis, Pat. § 208; *Ruggles* v. *Eddy*, 10 Blatchf. 52; *Mowry* v. *Grand St. & N. R. Co.* 10 Blatchf. 89; *Phila. W. & B. R. Co.* v. *Trimble*, 77 U. S. 10 Wall. 367 (19: 948); *Gayler* v. *Wilder*, 51 U. S. 10 How. 477 (13: 504); *Wilson* v. *Rousseau*, 45 U. S. 4 How. 646 (11: 1141).

In equity the *allegata* and *probata* must agree.

Providence Rubber Co. v. *Goodyear*, 76 U. S. 9 Wall. 798 (19: 567); *Harrison* v. *Nixon*, 34 U. S. 9 Pet. 508 (9: 201); *Foster* v. *Goddard*, 66 U. S. 1 Black, 518 (17: 232); *Simms* v. *Guthrie*, 18 U. S. 3 Cranch. 19 (3: 642).

A claim for a combination is not infringed by the use of only a part of the combination.

Prouty v. *Ruggles*, 41 U. S. 16 Pet. 341 (10: 985); *Eames* v. *Godfrey*, 68 U. S. 1 Wall. 78 (17: 547); *Case* v. *Brown*, 69 U. S. 2 Wall. 320 (17: 817); *Dunbar* v. *Meyers*, 94 U. S. 187 (24: 34); *Fuller* v. *Yentzer*, 94 U. S. 297 (24: 106).

Messrs. **E. E. Wood** and **Edward Boyd,** for appellees:

A deed, absolute on its face and with full covenants, may be modified and converted into a mortgage by a verbal condition.

Babcock v. *Wyman*, 60 U. S. 19 How. 289-299 (15: 644-648).

A general conveyance may be limited by restrictive words contained in the same instrument.

People v. *Gosper*, 8 Neb. 309; *Higgins* v. *Waugatt*, 34 Maine, 308.

The object and purpose of the contract should be considered for the purpose of construction.

Bickford v. *Cooper*, 41 Pa. 146; *Thomas* v. *Wiggers*, 41 Ill. 478; *Brown* v. *Slater*, 16 Conn. 196; *Fowle* v. *Bigelow*, 10 Mass. 379; *Phelps* v. *Bostwick*, 22 Barb. 318; *Pollard* v. *Maddox*, 28 Ala. 321; *Price* v. *Evans*, 26 Mo. 49.

The extent of the legal interest of a trustee in an estate given him in trust is measured by the object and extent of the trust upon which the estate is given.

Perry, Trusts, § 812; 3 Redf. Wills, 534; *Cleveland* v. *Hallett*, 6 Cush. 406; *Gould* v. *Lamb*, 11 Met. 84; *Brooks* v. *Jones*, 11 Met. 191; *Fisher* v. *Fields*, 10 Johns. 495; *Brewster* v. *Striker*, 1 E. D. Smith, 321.

A power of sale can be executed only by the persons to whom it is expressly given.

Perry, Trusts, 447; 3 Redf. Wills, 547; 3 Wms. Exrs. 1018.

If a power of sale, or any other power, is given to two or more persons by name, with no words of survivorship, and one dies, or refuses to act, the others cannot execute the power.

Perry, Trusts, 447, 448; *Shelton* v. *Homer*, 5 Met. 465; *Floyd* v. *Johnson*, 2 Litt. (Ky.) 109; *Chandler* v. *Rider*, 102 Mass. 268; *Tainter* v. *Clark*, 13 Met. 226; *Fontain* v. *Ravenal*, 58 U. S. 17 How. 369 (15: 80); *Ross* v. *Barclay*, 18 Pa. 184.

A sale by one of the trustees would be void, since trustees cannot act separately, unless the authority be to them, or either of them.

2 Washb. Real Prop. 484; *Wilbur* v. *Almy*, 53 U. S. 12 How. 180-191 (13: 944); *Sinclair* v. *Jackson*, 8 Cow. 543; *Franklin* v. *Osgood*, 14 Johns. 527; *Ridgely* v. *Johnson*, 11 Barb. 527; *Cox* v. *Walker*, 26 Me. 504; *Vandever's App.* 8 Watts & S. 405; *Hill* v. *Josselyn*, 13 Smedes & M. 597; *Chambers* v. *Minchin*, 7 Ves. Jr. 198; *Ex parte Rigby*, 19 Ves. Jr. 463.

In regard to the execution of a power conferred upon two or more trustees, a distinction is drawn between a naked power and a power coupled with an interest.

Franklin v. *Osgood*, 14 Johns. 560; *Sinclair* v. *Jackson*, 8 Cow. 554; *Hunt* v. *Rousmanier*, 21 U. S. 8 Wheat. 174 (5: 589); *Peter* v. *Beverly*, 35 U. S. 10 Pet. 564 (9: 522); *Gray* v. *Lynch*, 8 Gill, 413; *Williams* v. *Otey*, 8 Humph. 563.

The two instruments will be taken together, and construed as one contract.

Rorabacher v. *Lee*, 16 Mich. 172; *Heald* v. *Hodgon*, 16 Maine, 219; *Spangler* v. *Springer*, 22 Pa. 454; *Vaugine* v. *Taylor*, 18 Ark. 65; *Rogers* v. *Kneeland*, 13 Wend. 114; *Dillingham* v. *Estill*, 3 Dana, 23; *Stacey* v. *Randall*, 17 Ill. 467; *Hill* v. *Huntress*, 43 N. H. 480; *Norton* v. *Kearney*, 10 Wis. 443; *Logan* v. *Tibbott*, 4 Greene (Iowa), 392; *Philips* v. *Scott*, 2 Watts, 318; *Bradley* v. *Marshall*, 54 Ill. 173; *Smith* v. *Turpin*, 20 Ohio St. 478; *Allen* v. *Nofsinger*, 13 Ind. 494; *Parks* v. *Cooke*, 3 Bush, 169; *Van Hagen* v. *Van Rensselaer*, 18 Johns. 420.

And the recitals in each may be explained or corrected by a reference to any other, in the same way as if they were only several parts of one instrument.

2 Pars. Cont. 502; *Sawyer* v. *Hammatt*, 15 Maine, 43; *Price* v. *Bigham*, 9 Harr. & J. 296.

If a trustee conveys the trust estate in violation of the terms of his trust, the *cestui que trust* may follow it into the hands of a grantee with notice, or one who takes without consideration.

Oliver v. *Piatt*, 44 U. S. 3 How. 333 (11: 622); *Wormley* v. *Wormley*, 21 U. S. 8 Wheat. 423 (5: 651); *Murray* v. *Ballou*, 1 Johns. Ch. 567; *Bailey* v. *Wilson*, 1 Dey & B. Eq. 182; *Den* v. *McNight*, 11 N. J. L. 385; *Case* v. *James*, 29 Beav. 512; *Mackreth* v. *Symmons*, 15 Ves. Jr. 340.

No person can be introduced into a firm without the consent to it of all who are members.

Pars. Partn. 12; *Channel* v. *Fassitt*, 16 Ohio, 166; *Kingman* v. *Spurr*, 7 Pick. 235; *Murray* v. *Bogert*, 14 Johns. 318; *Moddewell* v. *Kever*, 8 Watts & S. 63; *Nicoll* v. *Mumford*, 4 Johns. Ch. 522.

An assignee, *pendente lite*, need not be made a party to a bill.

Story, Eq. Pl. § 156; 1 Dan. Ch. Pr. 281; *Sedgwick* v. *Cleveland*, 7 Paige, 287; *Cook* v. *Mancius*, 5 Johns. Ch. 93; *Brandon* v. *Cabiness*, 10 Ala. 155; *Hoxie* v. *Carr*, 1 Sumn. 173; *Allen* v. *Poole*, 54 Miss. 323; *Boulden* v. *Lanahan*, 29 Md. 200.

Mr. Justice **Field** delivered the opinion of the court:

The defendants below, appellants here, seek a reversal of the decree of the circuit court upon several grounds, and, among others, these: 1st, that the complainants have not established a title in themselves to the patents; and 2d, that they have not proved any damages for the infringement of the claims of the patentee.

The first of these grounds rests upon the supposed effect of the assignment executed by the patentee to the complainants on the 6th of October, 1874. The instrument in its words of transfer is amply full and expressive to convey to them his entire interest in and title to not only the patents then issued, but also any renewals or extensions thereof. His language is:

"I, the said Hiram Moore, do hereby assign, sell, and set over unto the said Charles W. West and John M. Westcott the entire right, title, and interest in and to the letters patent aforesaid, and in and to the invention and improvements represented, shown, or described therein, including any renewal, reissue, or extension thereof, the same to be held and enjoyed by the said West and Westcott, and their legal representatives, as fully and entirely as the same would have been held and enjoyed by me had this assignment and sale not been made, to the full end of any term or terms for which the letters patent aforesaid, or either of them, have been, or hereafter may be, granted, reissued, renewed, or extended."

Nothing could add to the force of this language. The concluding provision, that the net profits arising from sales, royalties, or settlements, or other source, are to be divided between the parties to the assignment so as to give the patentee one fourth thereof, does not, in any respect, modify or limit the absolute transfer of title. It is a provision by which the consideration for the transfer is to be paid to the grantor out of the net profits made; it reserves to him no control over the patents or their use or disposal, or any power to interfere with the management of the business growing out of their ownership. The clause appointing the assignees attorneys of the grantor, with authority to use his name whenever they deem proper in such management, does not restrict in any way the power of the assignees after the transfer of the property. It was inserted, perhaps, from over caution, but it was unnecessary. The assignees were under no obligation to consult him in the management of the property. Their own interests [163

were a sufficient guaranty of a judicious exercise of their power of disposition.

The assignment of Westcott to Kinsey and Morris does speak of an interest possessed by him in the patents, but it explains what that interest is, viz.: one half part of the net profits from the patents, arising from sales, royalties, or settlements, or other source, and it refers to the original assignment of the patentee to West and Westcott.

It follows that the contention of the defendants, that the complainants have not established their title to the patents, is not sustained. The complainants do not hold the property as trustees for the benefit of the patentee; they are only trustees for him of one fourth of the profits which may be received by them. *Tilghman* v. *Proctor*, 125 U. S. 136, 143 [31: 664, 666].

The second ground of the appellants is, we think, well taken. The master reported in his first report that the complainants waived all claim for profits arising from the manufacture, use and sale of the patented machines, and relied upon the proofs as establishing such a fixed royalty or license fee as would furnish a criterion by which to estimate complainants' damages; and, proceeding upon that view, he found from two instances, and perhaps a third instance, in which a specified sum had been paid for the use of the machines, or for the [164] privilege of making and selling them, that the complainants had suffered damages on each one-horse machine used by the defendants, of one dollar, and on each two-horse machine used by them, of two dollars. One of the instances relied upon was that of the Wayne Agricultural Company, which had paid the sums named for the use of the machines for four years. It is not clear when the payment was made, but it would seem that it was made in part under a threat of suit, and in part as the result of an arbitration after litigation on the subject had been commenced, and to avoid future litigation. It is clear that a payment of any sum in settlement of a claim for an alleged infringement cannot be taken as a standard to measure the value of the improvements patented, in determining the damages sustained by the owners of the patent in other cases of infringement. Many considerations other than the value of the improvements patented may induce the payment in such cases. The avoidance of the risk and expense of litigation will always be a potential motive for a settlement. The second instance relied upon is that of a corporation by the name of P. P. Mast & Co., which had obtained a license to manufacture grain-drills and seeders at Springfield, Ohio, and to sell the same within the United States, upon an agreement to pay one dollar for every one-horse drill or seeder and two dollars for every two-horse drill, provided that if the fee were paid upon the days designated for semi-annual returns, or within ten days thereafter, a reduction of fifty per cent should be made from the fee. The corporation soon afterwards changed its feeding device, and thus did not infringe, and it settled for a portion of the fees; but it does not appear what they were. It is plain, without regard to the settlement had, that an agreement of this kind, where the charge may be fixed at the pleasure of the owner of the patent, cannot be received as evidence of the value of the improvements patented so as to bind others having no such agreement. The third instance is that of an alleged license to English & Over. The complainant Westcott testifies that they continued to pay as long as they were in partnership, but how much, or how long that partnership continued, does not appear. And Mr. Over, a member of that firm, does not [165] recollect that it ever took a license. Westcott also testifies that no other persons or corporations than those mentioned ever took any licenses from them under the patents sued upon.

It is undoubtedly true that where there has been such a number of sales by a patentee of licenses to make, use, and sell his patents, as to establish a regular price for a license, that price may be taken as a measure of damages against infringers. That rule was established in *Seymour* v. *McCormick*, 57 U. S. 16 How. 480 [14: 1024], and affirmed in *New York City* v. *Ransom*, 64 U. S. 23 How. 487 [16: 515]; *Packet Co.* v. *Sickles*, 86 U. S. 19 Wall. 611, 617, [22: 203, 204]; *Birdsall* v. *Coolidge*, 93 U. S. 64 [23: 802]; and *Root* v. *R. Co.* 105 U. S. 189, 197 [26: 975, 978]. Sales of licenses, made at periods years apart, will not establish any rule on the subject and determine the value of the patent. Like sales of ordinary goods, they must be common, that is, of frequent occurrence, to establish such a market price for the article that it may be assumed to express, with reference to all similar articles, their salable value at the place designated. In order that a royalty may be accepted as a measure of damages against an infringer, who is a stranger to the license establishing it, it must be paid or secured before the infringement complained of; it must be paid by such a number of persons as to indicate a general acquiescence in its reasonableness by those who have occasion to use the invention; and it must be uniform at the places where the licenses are issued. Tested by these conditions, the sums paid in the instances mentioned, upon which the master relied, cannot be regarded as evidence of the value to the defendants of the inventions patented. The court below so treated them, and held that without further evidence the complainants would be entitled only to nominal damages, and remanded the case to the master to take further evidence. He did so, but in his second report he stated that the additional evidence did not strengthen the proofs previously made in support of the claim that complainants had established a license fee or royalty which furnished a criterion by which to estimate the damages. He therefore proceeded to estimate the value of the claim or combination patented, to the defendants, who had used it in violation of the complainants' rights, and for that purpose took the [166] opinions of different persons on the subject. Of the witnesses produced by the complainants, it does not appear that any ever manufactured or used the patented machines. One of the principal witnesses stated that he had never read the patent, had never seen a drill made like that described, had no experience in the matter of licenses, and that he placed his estimate of the value of the claim patented at what

he considered would be a fair recompense to the inventor. The estimates of all the witnesses of the complainants were merely conjectual; that is, were made without having knowledge of any saving secured either in the cost of the machine or in the labor required for its use, they simply stating that they considered that the amounts named by them would be a reasonable and fair royalty or license fee for the patented drill. Naturally estimates founded upon supposed but not known benefits were widely apart, varying from three to six dollars for a two-horse drill and half those sums for a single horse drill. On the other hand, witnesses produced by the defendants, who had examined, and some of whom had used, the patented drills, stated that they did not consider them of any more utility than other seeding drills in use, and that they did not bring any greater price in the market. The master does not appear to have given weight to the judgment of any of the witnesses, but concluded, though by what process of reasoning is not perceived, that seventy-five cents on each one-horse drill and double that sum on each two-horse drill would be the proper amount to allow; and as he had found, though upon testimony equally loose and insufficient, that there were one thousand one-horse drills and an equal number of two-horse drills, he reported that the complainants were entitled to $2,250 as damages. The court was not satisfied with his conclusion, and, without stating the ground of its action, ordered the amount to be reduced to $1,800 as damages which the plaintiff should recover, besides costs, and $150 fee for the master, sustaining the exceptions to the report so far as it was inconsistent with that decree, and in other respects overruling them.

The action of the court is subject to the same [167] objection as the report of the master. The ruling that a royalty was established, as made in the first report, had been repudiated by it, and no evidence of the value of the invention to the defendants was adduced except the conjectural estimates stated; and they furnished no satisfactory basis for any damages, much less data, which authorized the specific finding made as to the damages for each drill used. Opinions not founded on knowledge were of no value. Conclusions from such opinions were at best mere guesses. By the decision rendered a settled rule of law was violated, that actual, not speculative, damages must be shown, and by clear and definite proof, to warrant a recovery for the infringement of a patent. As was said long ago by this court: "Actual damages must be calculated, not imagined; and an arithmetical calculation cannot be made without certain data on which to make it." *New York City* v. *Ransom*, 64 U. S. 23 How. 487, 488 [16: 515]. There was no question in this case of damages arising from lost sales, or injurious competition, for no machines had been manufactured and put on the market by the patentee, or by the complainants, his assignees.

No legal ground being shown for the recovery of specific damages for the alleged infringement of the patents, the decree must be reversed, and the cause remanded, with directions to enter a decree for the complainants for nominal damages; and it is so ordered.

FRED. B. SMITH ET AL., *Appts.*, [167]
v.
JOHN E. ADAMS.

(See S. C. Reporter's ed. 167-177.)

County seat in Dakota—judicial cognizance—limit of—contesting validity of election—jurisdictional value, when not estimated—final judgment.

1. The designation of the county seat of a county in Dakota, or providing for its designation by popular election, was a matter properly belonging to the legislative department of the territorial government. It was not a matter by itself for judicial cognizance.
2. But when the law of the Territory left the designation of a county seat to the voters of the county, and provided that the validity of the election could be contested by any competent elector of the county, the designation of a county seat under the law became the subject of judicial cognizance.
3. Whenever the claim or contention of a party takes such a form that the judicial power is capable of acting upon it, then it has become a case of controversy within the meaning of the article of the Constitution defining the limits of the judicial power of the United States.
4. The validity of an election to determine the county seat of a county in Dakota under the laws of the Territory, when presented to the courts in the forms prescribed by those laws, becomes a subject of action within the jurisdiction of the territorial court and is subject to appeal to its supreme court.
5. It is impossible to state any rule, by which the benefit the county may gain, or the damage it may suffer from the result of the election contested, can be estimated; therefore, there is not in the case such an amount in dispute as to enable this court to take jurisdiction of the appeal.
6. A judgment of a lower appellate court which reverses the judgment of the court of original jurisdiction, and remands the case to it for further proceedings, is not a final judgment.

[No. 1498.]

Submitted March 11, 1889. Decided April 1, 1889.

APPEAL from a judgment of the Supreme Court of the Territory of Dakota, reversing a judgment of the District Court of that Territory sustaining a demurrer to complaint in an action to set aside an election, held to settle the location of a county seat.

On motion to dismiss and affirm. *Dismissed.*

Statement by *Mr. Justice* **Field:**

The facts disclosed by the record are briefly [168] as follows: The Political Code of Dakota, in force in 1886, in providing for the organization of counties and the location of their county seats, authorizes the Governor of the Territory, upon proper application of the voters of any unorganized county, to take measures for its organization, and for that purpose to appoint commissioners to locate the county seat temporarily, and to appoint officers of the county to hold their offices until the next general election. (Political Code, chap. 21, §§ 2, 3, and 4.) It then directs that, at the first general election subsequent to such organization, the legal voters of the county shall designate on their ballots the place of their choice for county seat, and that the place thus designated receiving a majority of all the votes cast shall thereafter be the county seat, but that, if no place receives a majority of such votes, the place designated as the county seat temporarily shall remain the county seat until changed as provided in a subsequent section. (Chap. 21, § 6.) That section

declares in substance that, upon petition of two thirds of the qualified voters of the county, it shall be the duty of the county commissioners to notify the voters to again designate upon their ballots at the next succeeding general [169] election the place of their choice, and if, upon the canvass of such votes, any of the places thus designated shall receive two thirds of the votes cast, such place shall be the county seat. Chap. 21, § 7.

On the 30th of July, 1886, Congress passed an Act "to prohibit the passage of local or special laws in the Territories of the United States, to limit territorial indebtedness, and for other purposes." 24 Stat. at L. chap. 818, p. 170. The first section, among other things, enacts: "That the Legislatures of the Territories of the United States now, or hereafter to be, organized, shall not pass local or special laws in any of the following enumerated cases, that is to say: granting divorces; changing the names of persons or places; laying out, opening, altering, and working roads or highways; vacating roads, town plats, streets, alleys, and public grounds; locating or changing county seats; regulating county and township affairs; regulating the practice in courts of justice; regulating the jurisdiction and duties of justices of the peace, police magistrates, and constables," etc., etc. The 7th section declares that all Acts and parts of Acts subsequently passed by any territorial Legislature in conflict with the provisions of this Act of Congress shall be null and void.

The County of Brown in Dakota was organized under the provisions of the Political Code, and the City of Columbia was designated by the commissioners as the county seat temporarily, and it remained as such county seat until some time in 1887, no other place having been designated by a majority of the voters of the county. On the 11th of March, 1887, the territorial Legislature passed an Act "to provide for the relocation of county seats in counties where county seats have been located by a vote less than a majority of all the electors voting thereon." (Laws of 1887, chap. 173, p. 369.) Section 1 of this Act, as amended on the same day when the original Act took effect, provides: "That in all counties in this Territory having a population not less than twelve thousand as shown by the census of 1885, and having an area of not less than forty-eight congressional townships, and in which the present county seat thereof has been heretofore temporarily [170] located under the provisions of section four of chapter 21 of the Political Code, and remaining the county seat under the provisions of section six of chapter 21 of the Political Code, by reason of the fact that no place received a majority of all the votes cast at the election held under the provisions of said section six of chapter 21 of the Political Code, there shall be held a special election of the duly qualified voters of such counties on the 12th day of July, A. D. 1887, at which election the question of the relocation of the county seat of such counties shall be voted upon: *Provided*, That such election shall not be held in any county unless there shall be presented to the judge of the district court of the district in which such county is situated, or in his absence from such district, or in his inability to act, to the Chief Justice of said Territory, a petition signed by at least one third in number of the electors of said county as shown by the vote cast at the last general election, praying said judge to issue an order directing the holding of said election as provided in this Act. If said judge shall find that said petition is signed by one third of the electors of said county as above provided, he shall issue an order directing said election to be held in accordance with the provisions of this Act."

In other sections provision is made for giving notice of the election and for canvassing the votes, and for removing the records of the county to the place designated. Under this Act an election was held in Brown County on the 12th of July, 1887, on the question of relocating the county seat of that county. A majority of the votes were cast in favor of the City of Aberdeen as the county seat, and the county offices with their records and papers were accordingly removed to it from Columbia.

By a law of the Territory any elector, upon leave of the district court of the district embracing the county, may contest the validity of such an election. The plaintiff below, John E. Adams, upon a petition setting forth his objections to the election in question, was allowed by the District Court of the Fifth District to contest its validity and to bring an action in that court for that purpose. He accordingly filed a notice of contest, addressed to the com- [171] missioners of the county, in the nature of a complaint, commencing the action authorized.

The ground upon which the validity of the election was assailed was that the Act of the territorial Legislature was in conflict with the Act of Congress of July 30, 1886, prohibiting local or special legislation "locating or changing county seats;" that the territorial Act, though general in its terms, was so drawn as to be applicable to only one county, no other county coming within its provisions; that this fact was well known at the time to the Legislature; and that the object of passing the Act in this form was to evade and nullify the Act of Congress. The complaint contains all other allegations as to the status of the contestant, the appointment of the commissioners, the condition of Brown County as an unorganized county, the temporary location of its county seat, the number of its population, the passage of the territorial Act and the election thereunder and consequent proceedings, which were necessary to raise the question of the validity of the election. To this notice of contest or complaint the commissioners demurred, on the ground that it did not state facts sufficient to constitute a cause of action against them or either of them. The district court sustained the demurrer as a matter of form, and as the plaintiff elected to stand upon his complaint without amendment, ordered that the same be dismissed. On appeal to the supreme court of the Territory this judgment was reversed, and the cause remanded to the district court for further proceedings according to law and the judgment of the appellate court.

The reversal was ordered on the grounds—

"*First*. That appellant's action was properly brought, and the Act of the Legislature of the Territory of Dakota, passed March 11,

1887, under which the election was held, by which the county seat of Brown County, D. T., was removed from Columbia to Aberdeen, is in conflict with the Act of Congress, approved July 30, 1886, prohibiting special legislation in the Territories of the United States.

"*Second.* That the appellant has such an interest in the subject matter as enables him to maintain this action.

[172] "*Third.* That the judgment rendered is such a final judgment as entitles him to an appeal."

To review the judgment of the supreme court of the Territory the case was appealed to this court, the appeal being allowed in open court and also by the Chief Justice of the Territory. There were five commissioners of the county, and three of them afterwards prayed that the order allowing the appeal be vacated, stating that they had become satisfied that no further proceedings should be had in the case, and that, as a majority of the board, they had, before the appeal bond was filed or any citations were issued, directed their attorneys not to perfect the appeal, but that the attorneys had disregarded the instructions. It does not appear that any action was taken in the court below upon the application.

It appears from documents filed in the court below after the appeal was taken, that on the 27th of June, 1887, the City of Aberdeen conveyed to the County of Brown certain real property, exceeding in value $5,000, situated within its limits, with the building in process of erection thereon, to be held by the county so long as the building should be used for a court house, but when the building ceased to be thus used the land to revert to the grantor.

The respondent now moves that the appeal be dismissed, or that the judgment below be affirmed, for the following among other reasons:

I. Because this court has no jurisdiction of the subject matter of the action, no federal question being involved.

(*a*) The matter in dispute, exclusive of costs, does not exceed the sum of five thousand dollars; no sum of money being in dispute and no right the value of which can be calculated or ascertained.

(*b*) No question is presented involving the validity of any patent or copyright, nor is there drawn in question the validity of a treaty or statute of, or an authority exercised under, the United States.

II. Because it appears from the record that before the appeal to the Supreme Court of the United States was perfected a majority of the county commissioners declined to perfect and

[173] prosecute the same, and directed their attorneys not to perfect it, the instructions being given before any bond on appeal had been approved or citations issued.

Messrs. **Geo. F. Edmunds** and *C. S. Palmer*, for respondent, in support of motion to dismiss and affirm:

The contest is not for money or any right, the value of which can be measured by money.

Potts v. *Chrumakero*, 92 U. S. 358 (23: 499); *Kurtz* v. *Moffitt*, 115 U. S. 487 (29: 458).

The validity of any statute is not raised, nor any authority exercised under the United States drawn in question.

Snow v. *U. S.* 118 U. S. 346 (30: 207); *Bethall* v. *Demaret*, 77 U. S. 10 Wall. 537 (19: 1007); *Brown* v. *Colo.* 106 U. S. 95 (27: 132).

Two of said board only executed the undertaking and are prosecuting this appeal.

No severance has been attempted, either in the judgment or by subsequent summons and severance, or any other proceeding. For this irregularity this appeal must be dismissed.

Owings v. *Kincannon*, 32 U. S. 7 Pet. 402 (8: 727); *Simpson* v. *Greeley*, 87 U. S. 20 Wall. 152 (22: 328); *Feibelman* v. *Packard*, 108 U. S. 14 (27: 634).

This appeal was taken for delay only.

Micas v. *Williams*, 104 U. S. 556 (26: 842); *Whitney* v. *Cook*, 99 U. S. 607 (25: 446); *Zeckendorf* v. *Johnson*, 123 U. S. 617 (31: 277).

Messrs. **Samuel Shellabarger** and **J. M. Wilson**, for appellants, in opposition to motion to dismiss:

If the aggregate interest equals the jurisdictional amount, then the jurisdiction of this court exists.

Friend v. *Wise*, 111 U. S. 797 (28: 602); *Davies* v. *Corbin*, 112 U. S. 36-40 (28: 627-629); *Shields* v. *Thomas*, 58 U. S. 17 How. 5 (15: 94); *The Connemara*, 103 U. S. 754 (26: 322).

To dispose of this question without discussion would be a denial of a hearing which is accorded in such cases.

Bohanan v. *Neb.* 118 U. S. 231 (30: 71); *Hecker* v. *Fowler*, 66 U. S. 1 Black, 95 (17: 45); *Gay* v. *Parpart*, 101 U. S. 391 (25: 841).

Mr. Justice **Field** delivered the opinion of the court:

The designation of the county seat of a county in Dakota, or providing for its designation by popular election, was a matter properly belonging to the legislative department of the territorial government. It was not a matter by itself for judicial cognizance. But when the law of the Territory left the designation of a county seat to the voters of the county, and provided that the validity of the election could be contested by any competent elector of the county before the district court of the district within which the county was situated, upon leave obtained from such court for that purpose, and prescribed the mode in which such contest should be prosecuted by the contesting elector, and defended by the commissioners of the county under whose direction the election was held, and proofs be taken upon the matter in issue, and that the validity of the election should then be determined by the district court —designation of a county seat under the law became the subject of judicial cognizance, a case or controversy arising upon such proceedings being taken to which the judicial power of the Territory attaches. This has been substantially the meaning given to the terms "cases and controversies," used in the judicial article of the Constitution defining the limits of the judicial power of the United States. By those terms are intended the claims or contentions of litigants brought before the courts for adjudication by regular proceedings established for the protection or enforcement of rights, or the prevention, redress, or punishment of wrongs. Whenever the claim or contention of

[174] a party takes such a form that the judicial power is capable of acting upon it, then it has become a case of controversy. Thus, in *Osborn* v. *Bank of the United States*, 22 U. S. 9 Wheat. 738, 819 [6: 204, 223], this court, speaking by *Chief Justice* Marshall, after quoting the third article of the Constitution declaring the extent of the judicial power of the United States, said: "This clause enables the judicial department to receive jurisdiction to the full extent of the Constitution, laws, and treaties of the United States, when any question respecting them shall assume such a form that the judicial power is capable of acting on it. That power is capable of acting only when the subject is submitted to it by a party who asserts his rights in the form prescribed by law. It then becomes a case, and the Constitution declares that the judicial power shall extend to all cases arising under the Constitution, laws, and treaties of the United States."

We are of opinion, therefore, that the validity of an election to determine the county seat of a county in Dakota under the laws of the Territory, when presented to the courts in the forms prescribed by those laws, becomes a subject of action within the jurisdiction of the territorial court. As thus presented, it is a case of controversy between an elector of the county and its commissioners, and the judgment thereon of the district court of the Territory was subject to appeal to its supreme court. Whether the judgment of that court can be reviewed here must depend upon the Act of Congress of March 3, 1885 (23 Stat. at L. chap. 355, p. 443), which provides as follows:

"Sec. 1. That no appeal or writ of error shall hereafter be allowed from any judgment or decree in any suit at law or in equity in the Supreme Court of the District of Columbia, or in the supreme court of any of the Territories of the United States, unless the matter in dispute, exclusive of costs, shall exceed the sum of five thousand dollars.

"Sec. 2. That the preceding section shall not apply to any case wherein is involved the validity of any patent or copyright, or in which is drawn in question the validity of a treaty or statute of, or an authority exercised under, the United States; but in all such cases an appeal or writ of error may be brought without regard to the sum or value in dispute."

[175] The objection that no federal question is involved undoubtedly has reference to the second section of the above Act which provides that the appellate jurisdiction of this court over cases from the territorial courts shall not be determined by the amount in dispute, if the validity of a treaty or a statute of, or an authority exercised under, the United States, is drawn in question, but that in such cases an appeal or writ of error may be brought without regard to the sum or value in dispute. No such question being involved, our appellate jurisdiction in this case depends upon whether the amount in dispute, exclusive of costs, exceeds the sum designated. By matter in dispute is meant the subject of litigation, the matter upon which the action is brought and issue is joined, and in relation to which, if the issue be one of fact, testimony is taken. It is conceded that the pecuniary value of the matter in dispute may be determined, not only by the money judgment prayed, where such is the case, but in some cases by the increased or diminished value of the property directly affected by the relief prayed, or by the pecuniary result to one of the parties immediately from the judgment. Thus a suit to quiet the title to parcels of real property, or to remove a cloud therefrom, by which their use and enjoyment by the owner are impaired, is brought within the cognizance of the court, under the statute, only by the value of the property affected. *Alexander* v. *Pendleton*, 12 U. S. 8 Cranch, 462 [3: 624]; *Piersoll* v. *Elliott*, 31 U. S. 6 Pet. 95 [8: 332]; *Stark* v. *Starr*, 73 U. S. 6 Wall. 402 [18:925]; *Jones* v. *Bolles*, 76 U. S. 9 Wall. 364, 369 [19:734, 736]; and *Holland* v. *Challen*, 110 U. S. 15 [28: 52]. So in a case impeaching the right to an office, the amount of the salary attached to it is considered as determining the value of the matter in dispute. Thus in *Smith* v. *Whitney*, 116 U. S. 167, 173 [29:601, 602], where the application was for a writ of prohibition restraining proceedings by court-martial against an officer, an objection being taken to the appellate jurisdiction of this court on the ground that the subject matter of the suit was incapable of pecuniary estimation, the court, by *Mr. Justice Gray*, replied: "The matter in dispute is whether the petitioner is subject to a prosecution which may end in a sentence dismissing him from the service, and depriving him of a salary, as paymaster-general during the residue [176] of his term as such, and as pay inspector afterwards, which in less than two years would exceed the sum of five thousand dollars. R. S. §§ 1556, 1565, 1624, arts. 8, 22, 48, 53. The case cannot be distinguished in principle from those in which it has been held that a judgment awarding a peremptory writ of mandamus to admit one to an office, or a judgment of ouster from an office, might be reviewed by this court upon writ of error, if the salary during the term of the office would exceed the sum named in the statute defining its appellate jurisdiction. *Columbian Ins. Co.* v. *Wheelwright*, 20 U. S. 7 Wheat. 534 [5: 516]; *United States* v. *Addison*, 63 U. S. 22 How. 174 [16: 304]." Not doubting the correctness of the doctrine thus stated, we do not perceive how it can help the appellants. It is true they represent the county, but it is impossible to state any rule, by which the benefit the county may gain, or the damage it may suffer from the result of the election contested, can be estimated. The fact that the county may acquire or lose a parcel of land in Aberdeen exceeding in value $5,000, with the building thereon, by the conditional conveyance of that city, according as the county seat is kept at or removed from the place designated as county seat by the election, the validity of which is contested, does not obviate the difficulty. The acquisition or loss of the land in question is not a necessary consequence of the election for the county seat, such result not being created by law, but by a mere accident arising from a voluntary gift by Aberdeen, made contingent upon the removal of the county seat to that place and its continuance there. In *Smith* v. *Whitney* the salary was given by the law and went with the tenure of the office. A promise by a third person to grant to a litigant certain lands or make particular dona-

tions in case of a successful prosecution of a suit will not confer jurisdiction on this court to review the judgment, if without such promise or conditional donation the court would not have the requisite jurisdiction. We think, therefore, there is not in the case such an amount in dispute as to enable this court to take jurisdiction of the appeal. Upon this ground the appeal must be dismissed.

[177] It is not necessary, therefore, to consider the alleged refusal of a majority of the county commissioners to prosecute the appeal, and their application to the court below to vacate the order allowing it. The appeal had been perfected, and the jurisdiction over the cause thus transferred to this court, before the attention of the court below was called to the action of the majority. Whether such majority could afterwards authorize a withdrawal of the appeal, holding the relation the commissioners do to the county, need not now be discussed.

But there is a ground, not taken by the respondent, which forces itself upon our consideration, and that is, that the judgment of the supreme court of the Territory is not in form a final judgment. It not merely reversed the judgment of the district court, but remanded the cause to the court for further proceedings according to law and the judgment of the appellate court. A judgment of a lower appellate court which reverses the judgment of the court of original jurisdiction, and remands the case to it for further proceedings, is not a final judgment. A judgment of reversal is only final when it also enters or directs the entry of a judgment which disposes of the case. *On this ground, therefore, as well as on the previous ground, the appeal must be dismissed. And it is so ordered.*

---

[177] ISAAC S. LYON, *Appt.*,
v.
JOHN B. ALLEY.

(See S. C. Reporter's ed. 177-189.)

Taxes in District of Columbia—omissions to follow the statute—when tax invalid—alteration of assessment—equitable jurisdiction—grounds for—lien.

1. In the District of Columbia, where a special improvement tax has been imposed, the failure of the commissioner of improvements to deposit with the register a statement of the taxes, the failure of the register to place without delay in the hands of the collector a list of the persons taxed, and the failure of the collector to give the required notice to such persons constitute such a nonobservance of the requirement of the statute as to render invalid the tax sale and the certificates thereof.

2. When the requisitions prescribed for the assessment and collection of taxes are intended for the protection of the citizen, and to prevent a sacrifice of his property, and by a disregard of which his rights might be and generally would be injuriously affected, they are not directory but mandatory, and must be followed.

3. Provisions of statutes as to the form and mode of assessments, and the place where the tax lists are to be deposited, are designed for the benefit of the taxpayers and the protection of their property from sacrifice.

4. The erasure and interlineation in the assessment roll in this case, made nearly twelve months after it was completed and deposited in the register's office and after the lots not assessed had passed into the ownership of a *bona fide* purchaser, was an unauthorized and improper alteration and not a reassessment.

5. When the illegality of a tax sale is patent upon the face of the proceeding, the jurisdiction of a court of equity to remove a cloud does not attach.

6. Equity will not interpose to arrest the proceedings for the collection of a tax upon the sole ground of its illegality; there must be some equitable ground for relief besides the mere illegality of the tax.

7. A lien created by the terms of a statute authorizing the assessment and collection of a tax exists and attaches only according to such terms and conditions as are prescribed by the statute creating it.

[No. 149.]

Argued Jan. 7, 8, 1889. Decided April 1, 1889.

APPEAL from a decree of the Supreme Court of the District of Columbia, in favor of plaintiff, to remove clouds from, and acquire the title to, certain real estate in the City of Washington. *Affirmed.*

Statement by *Mr. Justice* **Lamar:** [178]

This is a suit in equity, brought by the appellee in the Supreme Court of the District of Columbia, to remove clouds from, and to quiet the title to, certain real estate in the City of Washington. The property is described as lots 1 to 12, inclusive, square 156, fronting on the north side of P Street north, between 17th and 18th Streets west, in that city, and was at one time owned in fee simple by the plaintiff, John B. Alley, who subdivided the lots and sold portions thereof to certain persons named, to whom he gave bonds of indemnity as a security against the claim of the defendant, Isaac S. Lyon. Alley and his grantees are in actual possession of the property, and this suit is brought, therefore, for the benefit of all of them. The claim of the defendant is derived from certain certificates of tax sale issued to him by the District of Columbia, October 15, 1881, the tax being a special improvement tax for setting the curbstones and paving the footways and gutters along the front line of the property.

The bill, after alleging these facts, sets out the various steps and processes by which the claim of the defendant originated, which is alleged to be invalid and illegal; and charges that the said certificates were issued without authority of law and are not any evidence of [179] title to, or lien upon the said lots. The relief asked for is a decree declaring the tax sale void, and an injunction against Lyon from setting up any right, title, or claim by virtue of the certificates issued to him on his purchase.

The defendant answered denying the validity of the title of the plaintiff and his grantees, and also filed a cross bill setting out in detail the proceedings by which his own claim originated; alleging that such claim was valid and legal, and superior in law and in equity to that of the plaintiff and his grantees; and praying that his certificates might be decreed a lien upon the lots. Upon an agreed statement of facts, the court at special term rendered a decree in accordance with the prayer of the cross bill. Upon appeal to the court in general term that decree was reversed, and a decree made in accordance with the prayer of the original bill; and an appeal from the latter decree brings the case here.

The material facts, as gathered from the record, are substantially as follows: on the 2d of November, 1869, the then corporation of

the City of Washington passed the following Act:

"*Be it enacted,*" . . . "That the mayor be, and he is hereby, authorized and required to cause the curbstones to be set and the footways and gutters paved on the north side of P Street north, between Sixteenth Street west and Rock Creek, the work to be contracted for and executed in the manner and under the superintendence provided by law, and to defray the expenses of said improvements a special tax, equal to the cost thereof, is hereby imposed and levied on all lots or parts of lots bordering on the line of the improvement; the said tax to be assessed and collected in conformity with the provisions of the Act approved October 12, 1865." (Acts 67th Council, ch. 236, p. 116.)

[180] The Act of October 12, 1865, referred to, extended prior Acts of May 23 and 24, 1853, to special improvements thereafter made, and provided that the cost and expense of every local improvement thereafter made, "unless otherwise provided for in the Act or Acts ordering the same, shall be levied, assessed, collected, and paid, and the payment thereof enforced," as provided in those Acts. Webb's Digest, 360-2.

The Act of May 23, 1853 (Webb's Digest, 155), provided for proposals for setting curbstones, etc., petition for the improvement and plan of the property, time within which the improvements to be made, and by its 5th section required the appointment of two assistant commissioners. Its 6th section reads as follows:

"So soon as the setting and paving of any such curbstone and footway shall have been completed by the commissioner of improvements, he shall deposit with the register a statement, exhibiting the cost of setting the curbstone and paving the footway in front of each lot or part of lot, separately, and the amount of tax to be paid by each proprietor of said lots or parts of lots; and the register shall then, without delay, place in the hands of the collector of taxes a list of the persons chargeable with such tax, together with the amount due by each person; and the collector shall, within ten days after receiving such list, give notice in writing to each proprietor, if residents of this city; if nonresidents, then to their tenants or agents, if known, stating the amount of tax by them respectively due, and requiring that the same be paid within thirty days from the date of such notice; and if any of the taxes so due shall remain unpaid for more than thirty days after the date of such notice, then the said collector shall proceed to collect the same, together with interest in addition thereto at the rate of ten per centum per annum, to be computed from the date of the commissioner's return to the register, in the same manner as other taxes upon real property are by law collected; and the collector shall deposit the same in bank to the credit of the ward entitled thereto, first deducting the commissions prescribed for collecting the same."

The 8th section provided that such work shall be paid for by certificates of stock, commonly known as "paving stock," issued by the mayor and given to the contractor, and redeemable from time to time as the taxes were collected.

None of the provisions of the Act of May 24, 1853, are important in connection with this case.

The Act of June 10, 1867 (Webb's Digest, 467), created an officer known as superintendent and inspector of improvements, whose duty [181] it was to prepare plats and fix grades, and to superintend the paving of footways, etc., and provided that, with two assistant commissioners to be appointed by the mayor from among those along or near the line of any proposed improvement, he should have the exclusive control of such improvement; further, that the superintendent and inspector should "be charged with the duty of making all assessments on lots bordering on any street, alley, or avenue which shall have been paved," etc. The last Act on the subject, that of October 28, 1867 (65th Council, chap. 6), provided that all taxes for paving, etc., should be payable in four installments, one fourth within thirty days after the service of the notice by the collector of taxes, and the remaining three fourths in three equal annual payments, for which certificates of indebtedness bearing interest at the rate of ten per centum per annum, and chargeable against the property involved, should be issued by the mayor to the contractor.

The lots in question are situated in what was formerly the 1st ward of the City of Washington, along the line of street the pavement of which was provided for by the Act of November 2, 1869, *supra*, and were at that time owned by one Thomas Young.

On the 1st of April, 1870, the Corporation of Washington contracted with one Henry Birch to set the curbstones and pave the footways and gutters in the 1st ward of the city; and between that date and November 16, 1870, he performed that part of the work bordering upon the lots in question, and the same was accepted by the corporation. Its cost was $2,054.10. At that time William Forsyth was the superintendent and inspector of the paving of carriageways and footways of the corporation under the Act of June 10, 1867. When the work under Birch's contract was completed Forsyth, as it was his duty to do, entered all of it in the ward book with the proper proportionate charge against each lot, with the exception of that appertaining to the lots in question. As to these no entry was made until November, 1871, when the following was interlined in red ink: "Entered November 17, 1870. This work was done at this date, but by request of the owner, not entered [182] until Nov. —, 1871. Wm. Forsyth, S'v'yor, D. C."

On the 18th day of January, 1871, there were issued to Henry Birch fifty-two certificates of paving stock for the four installments, being for the entire amount on the assessment roll, except as to the twelve lots in question.

Between November, 1870, and November, 1871, to wit, February 21, 1871, the government of the City of Washington was succeeded by that of the District of Columbia, and Forsyth became the surveyor of the District.

The contractor testifies on oath that he had nothing to do with the omission of the lots in

question from the assessment roll, and, in fact, knew nothing of such omission; that during the progress of the work the owner of the lots, Thomas Young, promised in person to pay in full for the improvements when finished, provided he, Birch, would deduct ten per cent from the contract price, and that he, Birch, agreed to this arrangement. When the entries relative to the lots were made, in November, 1871, the collector entered the amounts in the "special ledger" in his office as assessed against the lots, and then gave the notice thereof prescribed by law. Certificates of indebtedness against the lots, agreeably to the Act of October 28, 1867, were therefore issued to the contractor, who sold and transferred the same to the appellant, Lyon, for value before maturity. After their maturity, and for default in their payment, Lyon procured the collector of taxes of the District of Columbia, in 1881, to sell the lots in question, and bought them in, paying the purchase price by surrendering the certificates of indebtedness aforesaid, and paying the difference in cash. In return he obtained twelve several certificates of tax sale, one as to each lot, bearing date October 15, 1881.

Prior to the aforesaid entry in red ink, however, and while the records all showed no assessment or claim of any kind against the lots in question, to wit, October 2, 1871, Young sold and conveyed them to Hallett Kilbourn, and by various transfers thereafter, all made subsequent to the red-ink entry, they came into the possession and ownership of the plaintiff, January 26, 1881

[183] In 1875, while the title to the lots was in one James M. Latta, a sale of them was attempted to satisfy the delinquent taxes assessed against them as aforesaid. Latta thereupon filed his bill in equity against the District of Columbia and John F. Cook, collector, to enjoin such sale thereof, and a temporary restraining order was granted on the 29th day of July of that year, which still continues in force. Neither Lyon nor the contractor Birch, was made a party to that bill; and the collector, upon the service of said restraining order, made no entry or memorandum of the same against the lots in question, but by mistake entered the memorandum thereof as applying to the same numbered lots in square 256.

Mr. **Henry E. Davis,** for appellant:

Delay in returning the tax list will not invalidate a tax otherwise duly imposed.

Mills v. *Gleason*, 11 Wis. 470, 497-8.

Requirement of approval is directory only and its nonobservance cannot affect the tax.

Brady v. *Bartlett*, 56 Cal. 350.

The appellee does not make by his bill a case remediable in equity, to remove the lien of the tax, or to set aside the deed after a sale.

Cooley, Taxn. 2d ed. 779-781, notes and cases; *Hannewinkle* v. *Georgetown*, 82 U. S. 15 Wall. 547 (21: 231); *Bissell* v. *Kellogg*, 60 Barb. 617.

A tax cannot be released which does not already exist as a charge.

Doe v. *Deavors*, 8 Ga. 479, 483; *Rundell* v. *Lakey*, 40 N. Y. 513, 517.

An assessment of the expenses of widening a street upon the lands abutting thereon is an incumbrance upon such lands from the time of the order of widening.

Jones v. *Boston*, 104 Mass. 461, 465; *Blackie* v. *Hudson*, 117 Mass. 181, 183-4; *Carr* v. *Dooley*, 119 Mass. 294.

Mr. **H. H. Wells,** for appellee:

There was no assessment, nor any other lawful step taken. The deed, until the prerequisites of the tax laws are established, is a nullity.

Burroughs, Taxn. 203, 332 and cases; Blackwell, Tax Titles, pp. 33-35, and cases; *Williams* v. *Peyton*, 17 U. S. 4 Wheat. 77 (4: 518); *Parker* v. *Overman*, 59 U. S. 18 How. 137 (15: 318); *Amherst* v. *Sommers*, 2 Term. Rep. 372; *Colman* v. *Anderson*, 10 Mass. 105; *Agry* v. *Young*, 11 Mass. 220; *Stetson* v. *Kempton*, 13 Mass. 282; *Libby* v. *Burnham*, 15 Mass. 144; *Williams* v. *Brace*, 5 Conn. 190; *Thames Mfg. Co.* v. *Lathrop*, 7 Conn. 550; *Marsh* v. *Chesnut*, 14 Ill. 223; *Rivers* v. *Thompson*, 43 Ala. 633; *Thatcher* v. *Powell*, 19 U. S. 6 Wheat. 119 (5: 221); *Mason* v. *Fearson*, 50 U. S. 9 How. 248 13:125); *Games* v. *Stiles*, 39 U. S. 14 Pet. 326) 10: 476); *Powell* v. *Madison*, 21 Ind. 335;) *Marsh* v. *Clark Co.* 42 Wis. 502; *Worthington* v. *Whitman*, 67 Iowa, 190; *Forster* v. *Forster*, 129 Mass. 559.

The requisitions of the tax law are substantial and useful and cannot be dispensed with.

Hughey v. *Horrel*, 2 Ohio, 232; *Holt* v. *Hemphill*, 3 Ohio, 233; *Stead* v. *Course*, 8 U. S. 4 Cranch, 412 (2: 660).

The statute must be strictly if not literally complied with.

Chandler v. *Spear*, 22 Vt. 388; *Spear* v. *Ditty*, 9 Vt. 282; *Bellows* v. *Elliot*, 12 Vt. 569; *Sumner* v. *Sherman*, 13 Vt. 609; *Carpenter* v. *Sawyer*, 17 Vt. 122; *Myrick* v. *La Crosse*, 17 Wis. 442; *Atkins* v. *Kinnan*, 20 Wend. 241; *Sandwich* v. *Fish*, 2 Gray, 298; *French* v. *Edwards*, 80 U. S. 13 Wall. 506 (20: 702).

Every prerequisite to the power to sell the estate must precede its exercise.

Davis v. *Farnes*, 26 Tex. 296; *Yenda* v. *Wheeler*, 9 Tex. 408; *Robson* v. *Osborn*, 13 Tex. 298; *Wofford* v. *McKinna*, 23 Tex. 36.

Assessment cannot be increased without notice to the taxpayer.

People v. *Ward*, 105 Ill. 620; *O'Conner* v. *Mullen*, 11 Ill. 57, 116.

It is not allowable so to amend record as to render a sale valid which was invalid before.

Langdon v. *Poor*, 20 Vt. 13; *Judevine* v. *Jackson*, 18 Vt. 470; *Atkins* v. *Hinman*, 7 Ill. 451; *Early* v. *Doe*, 57 U. S. 16 How. 610 (14: 1079); *Ronkendorff* v. *Taylor*, 29 U. S. 4 Pet. 349 (7: 882); *Stead* v. *Course*, 8 U. S. 4 Cranch, 403 (2: 660); Blackwell, Tax Titles, 359-362, and cases; *Blight* v. *Banks*, 6 T. B. Mon. 206; *Blight* v. *Atwell*, 7 T. B. Mon. 268.

So much of the tax as is conceded ought to be paid must be tendered or the injunction will be refused.

Huntington v. *Palmer*, 7 Sawy. 355; *Morrison* v. *Hershire*, 32 Iowa, 271; *Grimmell* v. *Des Moines*, 57 Iowa, 144; *Miller* v. *Corbin*, 46 Iowa, 150; *Everett* v. *Bebee*, 37 Iowa, 452; *Connors* v. *Detroit*, 41 Mich. 128; *Phelps* v. *Harding*, 87 Ill. 442.

Mr. Justice **Lamar** delivered the opinion of the court:

The court below held—

(1) That the Act of the common council of

November 2, 1869, levying a tax for the paving and curbing of P Street in front of the lots involved in this controversy created an inchoate lien upon them which would have been complete had the assessment been made by the proper officer, in conformity with the law and the ordinances upon the subject;

(2) That inasmuch as the omission of this lot from the assessment roll was not made by mistake, or through ignorance or negligence, but intentionally and at the request of the party then owning the lots, and as Kilbourn, before purchasing the lots, exercised proper diligence in examining the records, and found no claim or lien of any kind existing against them, he should be considered as a *bona fide* purchaser, without notice of the lien imposed by the tax, and therefore as having taken his title free and clear of the tax in question; and,

(3) That as Kilbourn took the lots discharged of any lien imposed by the tax under consideration, any subsequent purchaser from him [184] would acquire the same sort of title—that is, a title not affected by the tax certificates involved in this case. It therefore granted Alley's prayer for a removal of the cloud upon his title occasioned by such tax sale.

To the correctness of these rulings the appellant's counsel have raised several objections, which it is necessary to consider. It is contended that the requirements of the statute, which were not complied with, were mandatory only so far that it was necessary they should be substantially observed; and that unless some injustice has been done or some inequality occasioned, equity will disregard a mere failure to follow the law. This proposition presents the question whether the failure of the commissioner to deposit with the register a statement of the taxes upon the lots, the failure of the register to place without delay in the hands of the collector a list of the persons taxed, and the failure of the collector to give the required notice to such persons, constituted such a nonobservance of the requirements of the statute as to render invalid, as against the appellee, the tax sale and the certificates thereof issued to the appellant.

In view of the specific and imperative language of these provisions, and more especially of their nature and obvious purpose, we cannot doubt that they were intended as conditions precedent, a strict compliance with which was necessary in order to make the tax chargeable as a lien upon the lots. This question was directly presented and distinctly settled in the case of *French* v. *Edwards*, 80 U. S. 13 Wall 506 [20: 702], in which the rule was laid down with regard to directory and mandatory provisions of tax laws, which has been since approved by the federal and state courts.

In that case the defendant asserted a title to the land in dispute under a deed executed by the sheriff of Sacramento County, California, upon a sale on a judgment rendered for unpaid taxes on the property described, and the whole case turned on the validity of this tax deed. It was a case of noncompliance with the requirements of the statute, the main question being whether the departure of the officer from such requirements rendered the sale invalid. The court said:

"There are undoubtedly many statutory [185] requisitions intended for the guide of officers in the conduct of business devolved upon them which do not limit their power or render its exercise in disregard of the requisitions ineffectual. Such generally are regulations designed to secure order, system and dispatch in proceedings, and by a disregard of which the rights of parties interested cannot be injuriously affected. Provisions of this character are not usually regarded as mandatory unless accompanied by negative words importing that the acts required shall not be done in any other manner or time than that designated. But when the requisitions prescribed are intended for the protection of the citizen, and to prevent a sacrifice of his property, and by a disregard of which his rights might be and generally would be injuriously affected, they are not directory but mandatory. They must be followed or the acts done will be invalid. The power of the officer in all such cases is limited by the manner and conditions prescribed for its exercise."

Judge Cooley in his work on Taxation refers to this case and says: "The doctrine therein stated seems a sound and just rule, and may be reasonably believed to be in accord with the legislative will in the cases to which it is applied." *Chief Justice* Shaw, in the earlier case of *Torrey* v. *Millbury*, 21 Pick. 64, lays down the same rule in nearly the same terms.

The rule thus stated applies unquestionably to the case before us, which is a much stronger one in the number and character of the prerequisites to the tax sale which were disregarded. The provisions of statutes as to the form and mode of assessments, as to tax lists, and the place where the tax lists are to be deposited, are, according to the highest authority, designed for the benefit of the taxpayers and the protection of their property from sacrifice. *Sandwich* v. *Fish*, 2 Gray, 298, 301; Cooley, Taxation, 216, 217, 218. When, therefore, Kilbourn, from whom the appellee derived title, purchased the lots in question, there was, so far as we can learn from the record in this case, nothing in the register's office or in the collector's office, or in the hands of the latter, to put a *bona fide* purchaser upon notice either actual or constructive.

We cannot concur with the counsel for ap- [186] pellant in the proposition that the requirements of the statute were substantially complied with. The erasure and interlineation in the assessment roll, made nearly twelve months after it was completed and deposited in the register's office, and after the lots not assessed had passed into the ownership of a *bona fide* purchaser, cannot be considered in any sense as a reassessment or an amendment of the original assessment. It was simply an unauthorized and improper alteration, by a person with not even the semblance of authority, of an official document in the assessor's office, where the law required it to be. Its only effect, if it has any, is to show, in connection with other facts upon the record, that the withholding of the assessment of these lots was not a mere mistake of the officers, but the result of an agreement between the then owner of the lot and the con-

tractor, whereby the former promised to pay and the latter to accept 90 per cent of the contract price for the improvements in lieu of the certificates of indebtedness otherwise to be issued by the mayor, and that, in pursuance of this agreement, the assessment of the lots was omitted by the officer at the request of the owner, and those certificates of indebtedness were not issued until more than twelve months after the certificates for the other improvements were issued, and until after the lands had been sold to Kilbourn. We are of opinion that Kilbourn obtained a title to the lots in question free from the lien of the alleged assessment, and that Alley acquired the same title alike unincumbered.

But it is contended that even if we adopt the conclusion reached by the court below, as to the illegality of the tax sale and the nullity of the certificate issued to the appellee, still the case made by the appellee does not show such a cloud upon his title as calls for relief from a court of equity. In other words, that when the illegality of a tax sale is patent upon the face of the proceedings, as is the case as to the sale here complained of, the jurisdiction of a court of equity to remove a cloud does not attach. The case of *Hannewinkle* v. *Georgetown*, 82 U. S. 15 Wall. 547 [21:231], cited by counsel, fails to support the contention that such is the law of this court. That case was [187] not a suit to remove a cloud from a title. The complainant filed a bill to enjoin the collection of a tax, alleged to be illegal, and the court decided that there was no remedy in equity to enjoin the collection of a tax, upon the sole ground of its illegality.

It is a well settled doctrine of this court that equity will not interpose to arrest the proceedings for the collection of a tax, upon the sole ground of its illegality. It is equally well settled by the decisions of this court and the state courts that after the land has been sold, and a conveyance of some sort made to the purchaser, courts of equity have inherent jurisdiction to give relief to the owner against vexatious litigation and threatened injury to the market value of the land, by removing the cloud which such illegal sale, and the illegal claim arising from it, may cast upon the title. And in such case of damage, either existing or apprehended, equity will interpose for relief, even during the progress of the proceedings before the sale.

In the *Union Pacific Railway Company* v. *Cheyenne*, 113 U. S. 516, 525 [28:1098, 1101], this court thus presents the whole law on this point:

"It cannot be denied that bills in equity to restrain the collection of taxes illegally imposed have frequently been sustained. But it is well settled that there ought to be some equitable ground for relief besides the mere illegality of the tax; for it must be presumed that the law furnishes a remedy for illegal taxation. It often happens, however, that the case is such that the person illegally taxed would suffer irremediable damage, or be subject to vexatious litigation, if he were compelled to resort to his legal remedy alone. For example, if the legal remedy consisted only of an action to recover back the money after it had been collected by distress and sale of the taxpayer's lands, the loss of his freehold by means of a tax sale would be a mischief hard to be remedied. Even the cloud cast upon his title by a tax under which such a sale could be made would be a grievance which would entitle him to go into a court of equity for relief."

It may be proper to observe that in the present case the illegality does not appear wholly on the face of the record, but that it is shown [188] in part by evidence outside, to wit, the fact that the title to the land sought to be charged was acquired by a *bona fide* purchaser without notice. We think, therefore, that the allegations of the bill and the facts proved in this case bring it fully within the equity jurisdiction of the court.

Another ground upon which we are asked to reverse the decision of the court below is, that, apart from the tax-sale certificates, the Act, itself a notice to all purchasers, in terms levied the tax directly upon the lots in question, and thereby a lien attached at once, and, the lien never having been removed, the decree should have required the appellee to pay to the defendant the amount of the tax due, before granting the relief prayed for.

It is clear that the Act does not in so many words create an express lien, and that the Acts of Congress do not expressly confer upon the corporation the authority to create such liens. The statement, therefore, must be taken as true, only in the sense that every municipal tax, in cases of local improvement, paving, etc., involves a lien upon the particular real estate on which it is imposed. The error of the argument of counsel, we think, lies in the assumption that the lien attaches at the date of the passage of the Act. The general rule is, that when no time is expressly fixed by the statute for the lien to take effect, it accrues upon the assessment of the tax. Now, the Act of the common council imposed and levied a tax to defray the cost of the improvement, but it also declared that the tax should be assessed and collected in conformity with the provisions of certain Acts which prescribed, in detail, the mode, manner and time of assessment, and the different steps to be taken preliminary to such assessment and collection. If any lien was created by the terms of the statute, it must have existed and attached according to such terms and conditions as were prescribed by the law creating it.

In the case of *Heine* v. *Levee Comrs.* 86 U. S. 19 Wall. 655, 659 [22:223, 225], the court said:

"Nor need we decide whether taxes once lawfully levied are, until paid, a lien on the property against which they are assessed, though it is laid down in the very careful work of Judge [189] Dillon, that taxes are not liens upon the property against which they are assessed, unless made so by the charter, or unless the corporation is authorized by the Legislature to declare them to be liens. But here no taxes have been assessed except those which have been released by the bondholders' accepting new bonds for the interest of the year so assessed. And it is too clear for argument that taxes not assessed are no liens, and that the obligation to assess taxes is not a lien on the property on which they ought to be assessed."

From the record before us, we think the decision of the court below, that no lawful assessment of the tax had been made; that no lien upon the lots in question exists; and that the appellant is not entitled to the relief prayed for in his cross bill, accords fully with the decisions of this court above referred to.

As the points disposed of are decisive of the case, we deem it unnecessary to discuss the effect of the temporary restraining order upon the validity of the collector's sale. *The decree of the Supreme Court is affirmed.*

---

[280] THE UNITED STATES, *Plff.*,
v.
STEPHEN H. PILE.

(See S. C. Reporter's ed. 280-283.)

Final judgment on indictment—power of court to reconsider judgment at next term—division of opinion.

1. When the circuit court has entered its judgment of imprisonment and imposing a fine, upon the trial of an indictment, and has overruled the motion in arrest of judgment and for a new trial, the judgment, thus entered, is final.
2. An order merely suspending the execution of the judgment until the next term of the court, there being no proceeding pending to rehear, reconsider, or modify it, does not give the court power, at its next term, to reconsider the whole case nor to set aside the judgment.
3. Such a case, therefore, is not one for a division of opinion in which either the court or the circuit judge (who did not sit upon the trial) has any power to act.

[No. 206.]

Argued March 15, 1889. Decided April 8, 1889.

ON a certificate of division in opinion between the Judges of the Circuit Court of the United States for the Middle District of Tennessee, as to the sufficiency of an indictment for forging an affidavit in relation to a claim for a pension, after the conviction had been set aside, at a term subsequent to the one at which the judgment was rendered.

On motion to dismiss. *Dismissed.*

Mr. **G. A. Jenks,** *Solicitor-Gen.*, for the United States, plaintiff:

The statute requires that the point on which the judges disagreed shall be certified during the same term.

After the expiration of the October Term, the court had no power to set aside its judgment rendered at that term.

1 Chitty, Crim. Law, p. 722; *Com.* v. *Weymouth*, 2 Allen, 144; *Miller* v. *Finkle*, 1 Park. Cr. Rep. 376; *People* v. *Duffy*, 5 Barb. 205; *People* v. *Thompson*, 4 Cal. 242; *Beale* v. *Com.* 25 Pa. 20; *Com.* v. *Mayloy*, 57 Pa. 295; *Mathers* v. *Patterson*, 33 Pa. 485; *Catlin* v. *Robinson*, 2 Watts, 379; *Stephens* v. *Cowens*, 6 Watts, 518; *Albers* v. *Whitney*, 1 Story, 310.

Mr. **John P. Murray,** for defendant in error:

The court cannot, under the law, and will not, look to anything except the certificate of division of opinion.

Luther v. *Borden*, 48 U. S. 7 How. 47 (12: 581); *U. S.* v. *Briggs*, 46 U. S. 5 How. 208 (12: 119); *Ward* v. *Chamberlain*, 67 U. S. 2 Black, 430 (17: 319); *White* v. *Turk*, 37 U. S. 12 Pet. 238 (9:1069); *Nesmith* v. *Sheldon*, 47 U. S. 6 How. 41 (12:335); *Sadler* v. *Hoover*, 48 U. S. 7 How. 646 (12:855); *Dennistoun* v. *Stewart*, 59 U. S. 18 How. 565 (15:489); *Weeth* v. *New England Mortgage Co.* 106 U. S. 605 (27:99).

Mr. Justice **Miller** delivered the opinion of the court:

The defendant below, who is the defendant here, was tried in the Circuit Court of the United States for the Middle District of Tennessee upon an indictment charging him with falsely making and forging an affidavit of John Frogge and others in relation to a claim for a pension. The jury by their verdict found him guilty. His counsel then entered a motion in [281] arrest of judgment upon the alleged insufficiency of the indictment, which motion was overruled by the court. Thereupon the defendant moved for a new trial, which was refused, and judgment rendered sentencing the defendant to be confined in the jail of Davidson County for three months, and to forfeit and pay to the United States a fine of $250, and the costs, for which execution should issue, and the defendant be confined until said fine and costs were paid, or he was otherwise discharged by due course of law.

All this appears by the record to have been done on the 29th day of October, 1884, and on the 31st day of the same month the following order was made:

"UNITED STATES *vs.* S. H. PILE. } No. 3690.

"Came the U. S. att'y and the deft. in proper person, and upon application of the deft., the execution of the judgment heretofore entered herein is suspended until the fourth Monday in November next, upon defendant entering into recognizance for his appearance at that date. And thereupon came John C. Wright, who, with defendant, acknowledged himself indebted to the United States in the sum of $2,000, conditioned upon the appearance of defendant on the 4th Monday of November to abide by and perform the judgment of the court, and that he shall not depart without leave of the court.

"On Nov. 24th, 1884, on motion of defendant, the execution of the judgment herein was suspended until the next term of the court."

At the subsequent term, April 23, 1885, the following proceedings were had:

"UNITED STATES *vs.* S. H. PILE. } No. 3690.

"Upon sufficient grounds appearing to the court, the judgment of fine and imprisonment pronounced in this cause at the last term, and the judgment rendered at the last term of this court on the motion in arrest of judgment [282] overruling the same, are hereby set aside and for nothing held. And thereupon comes the defendant, by his counsel, before the Circuit and District Judges, and moved that the judgment in this case be arrested, and for causes set forth the following:

"1. The indictment does not aver any specific intent to defraud the United States or other party.

"2. The indictment is delusive, uncertain, repugnant, or inconsistent.

"And the motion coming on for argument before the honorable the judges aforesaid, and they being unable to agree as to whether the said motion is well taken or not, but having divided in opinion touching the same, at the request of the counsel of the defendant, a certificate of division is filed by the said judges, which is ordered to be made part of the record in this case. And no further steps will be taken in this case till the supreme court shall have adjudicated the question in said certificate set forth. The district attorney excepted to the order of the court setting aside the judgment of the court rendered at the last term, overruling the motion of defendant to arrest the judgment, and to the signing of division of opinion at this term of the court.

"It is ordered that the clerk certify the entire record of this cause to the supreme court.

"It is further ordered that defendant enter into bond with good security in the penal sum of two thousand dollars, conditioned that he make his personal appearance on the federal court room in Nashville on the first day of April Term of said circuit court, 1886, then and there to abide the further order of said circuit court. The defendant objects to the copying of any part of the record not authorized by law or the rules of the supreme court."

The judges thereupon certified to this court that they were divided in opinion upon the question of whether the motion in arrest of judgment should be allowed.

We are of opinion that the case here must be dismissed. When the circuit court had entered [283] its judgment against the defendant for an imprisonment of three months and a fine of $250 and had overruled the motion in arrest of judgment and for a new trial, it had finally disposed of the case. No new motion was made at that term of the court for any further consideration of the matter, and the judgment thus entered was final. It is true that the court made an order, upon the application of the defendant, by which the execution of that judgment was suspended until the fourth Monday in November, which was during the same term, and that on the 24th of November another order was entered still further suspending its execution until the next term of the court. But we do not consider that this order for the suspension of such execution set the judgment aside or was founded on any further motion to reconsider that judgment. Although the mere execution of it was suspended until the next term of the court the judgment remained in full force, with no proceeding pending to rehear, reconsider or modify it. At the succeeding April Term the court entered the order above quoted, that the judgment of fine and imprisonment, and that upon overruling the motion in arrest of judgment, be set aside and for nothing held; whereupon, the questions above stated were argued upon the motion in arrest of judgment and the certificate of division made by the two judges on the question of granting the motion.

We do not understand that the court at that time had any further jurisdiction of the case. There was no motion continued from the last term; there was no application or proceeding pending from the last term, nor anything coming over from it, except the suspension of execution. This did not leave the power of the court to reconsider the whole case still open. As it was not a case, therefore, for a division of opinion, in which either the court or the circuit judge (who did not sit upon the trial) had any power to act, we consider that there is nothing before this court, and the case must be dismissed here. The certificate of division related to a matter in which they had no right to act or to make such a certificate. It therefore brings nothing before this court for rereview; and *the case is dismissed* for want of jurisdiction.

R. G. BROCK ET AL., *Plffs. in Err.*, [341]

v.

THE NORTHWESTERN FUEL COMPANY.

(See S. C. Reporter's ed. 341-343.)

Jurisdiction of circuit court—allegation of citizenship—assignee of contract.

1. The circuit court has no jurisdiction of a suit founded on contract in favor of an assignee where it does not appear that the plaintiff's assignor could have brought suit on the contract if no assignment had been made, the record not showing of what State the assignor is a corporation.

2. The allegation that it was doing business in the State of Iowa does not necessarily import that it was created by the laws of that State.

3. But if that allegation were held sufficient to show that it was an Iowa corporation, the assignor could not have sued the defendants in the Circuit Court of the United States, because the parties to the original contracts were all citizens of Iowa.

[No. 210.]

Argued March 19, 1889. Decided April 8, 1889.

IN ERROR to the Circuit Court of the United States for the Northern District of Iowa, to review a judgment against defendant in an action to recover moneys alleged to be due under a written contract. *Reversed.*

Statement by *Mr. Justice* **Harlan:**

The Northwestern Fuel Company, a Minnesota corporation, brought this action, February 18, 1882, to recover from the plaintiffs in error, citizens of Iowa, the sum of $1,309.50, alleged to be due under a written contract, made July 21, 1881, between the latter and the What Cheer Land and Coal Company, a corporation alleged to be "doing business in the State of Iowa;" the benefits of which contract were as- [342] signed by that company to the plaintiff. The contract related to coal to be mined by the What Cheer Land and Coal Company at its mine in Iowa, and which Brock & Co. agreed to receive and pay for at certain specified rates. The defendants, Brock and McKenzie, in their answer, asserted a counterclaim of $20,000 against the plaintiff. There was a verdict against the defendants for $1,402.47. The case

was brought here for review in respect to numerous errors of law alleged to have been committed by the court below, to the prejudice of the defendants.

Mr. **Chas. A. Clark** for plaintiffs in error.
Mr. **C. D. O'Brien** for defendant in error.

Mr. Justice **Harlan** delivered the opinion of the court:

The Act of 1875 declares that no circuit or district court shall have "cognizance of any suit founded on contract in favor of an assignee, unless a suit might have been prosecuted in such court to recover thereon if no assignment had been made, except in cases of promissory notes negotiable by the law merchants and bills of exchange." 18 Stat. at L. 470. It does not appear that the What Cheer Land and Coal Company, the plaintiffs' assignor, could have brought suit on the contract in question, if no assignment had been made. The record does not show of what State it is a corporation. The allegation that it was "doing business in the State of Iowa" does not necessarily import that it was created by the laws of that State. But if that allegation were held sufficient to show it was an Iowa corporation, the result would be the same, because, in that case, it would appear that the parties to the original contract were all citizens of Iowa, and consequently that the assignor could not have sued the defendants in the Circuit Court of the United States.

The judgment is reversed, upon the ground
[343] that it does not appear, affirmatively from the record that the Circuit Court had jurisdiction; *Metcalf* v. *Watertown,* 128 U. S. 588 [*ante,* 543]; *and the cause is remanded for further proceedings in accordance with law.*

---

[256] PARLEY'S PARK SILVER MINING COMPANY, *Appt.,*
v.
JOHN W. KERR.

(See S. C. Reporter's ed. 256-262.)

Practice Act of Utah Territory—mining claim.

1. Under the Practice Act of Utah Territory, a complaint, which states that the plaintiff is in possession of real property and that the defendant claims an interest or an estate therein adverse to him, is sufficient, in that respect, in an action brought to determine such adverse claim.
2. A patent for a mining location of 600 feet is valid as to its extent under the Act of Congress of May 10, 1872.

[No. 154.]
Submitted Jan. 8, 1889. Decided April 1, 1889.

APPEAL from a judgment of the Supreme Court of the Territory of Utah, affirming a judgment of the District Court of that Territory in favor of defendant in an action to establish the validity of plaintiff's title to mining property in Utah, and to annul the adverse claim of the defendant thereto. *Affirmed.*

The facts are stated in the opinion.

Messrs. **J. G. Sutherland** and **J. R. McBride,** for appellant:

A void patent is no patent; it is worthless and null, conveys no title and has no validity, either in law or equity.

Minter v. *Crommelin,* 59 U. S. 18 How. 87 (15: 279); *Swayze* v. *Burke,* 37 U. S. 12 Pet. 23 (9: 980); *Stoddard* v. *Chambers,* 43 U. S. 2 How. 284 (11: 269); *Easton* v. *Salisbury,* 62 U. S. 21 How. 426 (16: 181); *O'Brien* v. *Perry,* 66 U. S. 1 Black, 132 (17: 114); *Sherman* v. *Buick,* 93 U. S. 216 (23: 851); *Smelting Co.* v. *Kemp,* 104 U. S. 643 (26: 877).

A want of power to make the grant, when shown by proof, is a complete answer to the grant which is interposed as title.

McCormick v. *Varnes,* 2 Utah, 357; *Jupiter Min. Co.* v. *Bodie Con. Min. Co.* 7 Sawy. 104.

Mr. **Charles W. Bennett,** for appellee:

The complaint is insufficient to admit proof attacking, or to justify a judgment annulling, a patent of the United States.

Curtis v. *Sutter,* 15 Cal. 260; *Gibson* v. *Chouteau,* 80 U. S. 13 Wall. 92 (20: 534); *Bruck* v. *Tucker,* 42 Cal. 346; *Dewey* v. *Hoag,* 15 Barb. 365; *Lombard* v. *Cowham,* 34 Wis. 486; *Du Pont* v. *Davis,* 35 Wis. 631.

The judgment is right on the merits, irrespective of any question of pleading.

Harvey v. *Ryan,* 42 Cal. 626; *Steel* v. *St. Louis Smelting & Ref. Co.* 106 U. S. 447 (27: 226); *St. Louis Smelting & Ref. Co.* v. *Kemp,* 104 U. S. 636 (26: 875); *French* v. *Fyan,* 93 U. S. 169 (23: 812); *Patterson* v. *Tatum,* 3 Sawy. 164.

Mr. Justice **Lamar** delivered the opinion of [257]
the court:

This action was brought in a District Court of the Territory of Utah on the 14th of September, 1880, by the appellant, Parley's Park Silver Mining Company, to establish the validity of its title to certain mining property in Utah, and to have annulled the adverse claim of the appellee, John W. Kerr, to an estate or interest in said property.

The suit was founded upon section 1479 Compiled Laws of Utah, § 254 of the Practice Act, which is as follows:

"An action may be brought by any person in possession by himself or his tenant, of real property, against any person who claims an estate or interest therein adverse to him, for the purpose of determining such adverse claim, estate, or interest."

The complaint sets forth the cause of action in the very terms of this section, alleging, in effect, that the plaintiff is owner, subject only to the paramount title of the United States, and in possession of the lands in question; that the defendant claims an adverse interest or estate therein; that the said claim is without legal or equitable foundation and void; and that it is a cloud on plaintiff's title, embarrasses him in the use and disposition of the property, and depreciates its value. Therefore, he prays (1) That the defendant may be required to set forth the nature of his claim, and that all adverse claims of the defendant may be determined by a decree of the court. (2) That by said decree it be adjudged that the defendant has no interest or estate whatever in said land, and that the title of the plaintiff is valid and good. (3) That the defendant be enjoined against asserting any adverse title to said land or premises.

The defendant in his answer denies the plaintiff's ownership and possession, and sets up a paramount title in himself based upon a patent to him from the United States embracing the land in question.

The facts agreed upon by the parties and adopted by the court as findings are substantially as follows: Two mining claims in the Blue Ledge mining district of Utah, known as the Central mining claim and the Lady of the [258] Lake mining claim, together with all the estate and interest therein, were conveyed to the plaintiff by the original locators and their grantees. At the time of the commencement of the suit there was no actual possession of the premises in question, but the plaintiff had, according to the mining laws of the district, possession of parts of those two mining claims, and, according to those laws, such possession is also possession of the disputed premises, provided they are rightfully a part of the Central and Lady of the Lake claims, and not the property of the defendant under his patent for the Clara mining claim. This mining claim patented to the defendant is overlapped by the two claims of the plaintiff, and this overlapped portion constitutes the premises in controversy. The plaintiff and its grantors had done the work required by law on its mining claims, but had not at the time obtained a patent for either.

The Lady of the Lake mining claim was located July 25, 1875, and was surveyed for patent, July 8, 1876.

The Central mining claim was located August 19, 1876, was surveyed for application for patent August 2, 1880, and application for patent was made by the plaintiff or its grantors soon thereafter.

The Clara mining claim was located July 28, 1872, was surveyed for patent, March 31, 1876, was entered and paid for February 20, 1879, and the patent itself was issued February 6, 1880, to the defendant, and held by him at the commencement of the suit.

It is also agreed that "during the 60 days' publication of the notice of application for patent for the Clara mining claim and mill site, the owners of the Lady of the Lake mining claim filed in the United States Land Office an adverse claim against said application for patent, and thereby made an adverse claim to the areas in conflict between the Lady of the Lake mining claim and the Clara mining claim and Clara mill site. On the 25th day of July, 1876, agreements in writing were made between the owners of the Lady of the Lake mining claim and the applicants for patent for the Clara mining claim and mill site, as follows: An agreement whereby the owners of the Clara mill site relinquished their application for pa- [259] tent for so much thereof as conflicted with the Lady of the Lake mining claim, and the owners of the Lady of the Lake mining claim agreed, in consideration thereof, to prosecute their application for patent for said claim with diligence and when patent was obtained to convey to the owners of said mill site or their assignees the area in conflict between said mill site and said Lady of the Lake mining claim, excepting and reserving, however, to the owners of the Lady of the Lake mining claim any mineral vein under the surface of said conflict area, and also the right to mine and extract any minerals therein. And the owners of the Clara mining claim agreed not to protest the application for patent for the Lady of the Lake mining claim, and at the same time the owners of the Lady of the Lake mining claim, as part of the same agreement, made and delivered to the applicants for patent for the Clara mining claim, and also filed in said United States Land Office, a written withdrawal relinquishing their said protest and adverse claim against the application for patent for the Clara mining claim, and released to the United States and their grantees the lands and premises in conflict between the said Clara and the Lady of the Lake mining claims, the said conflict area containing forty one-hundredths of an acre, more or less."

A copy of the mineral laws of the Blue Ledge mining district was, by agreement, filed with the stipulation, and it was agreed they formed a part of the application for patent for the Clara mining claim. The defendant reserved the right to object to the admissibility of any facts offered with a view to attack or impeach the validity of the patent.

The case was submitted to the court on the pleadings, stipulations, and exhibits of the parties. The court rendered judgment in favor of the defendant as the owner of the premises in dispute, and entitled to the possession thereof, and dismissed the plaintiff's action on the merits. This judgment, on appeal to the Supreme Court of Utah, was affirmed.

We think it clear that the appellant has no title, color of title, or right of any kind to the area in conflict between the Lady of the Lake mining claim and the Clara mining claim. The facts show that whilst the application for patent for the Clara mining claim was pending, [260] and during the sixty days' period of publication of notice, the owners of the Lady of the Lake claim (grantors of the appellant) filed their protest and adverse claim against the same, but afterwards, and within the sixty days, filed in the local land office a relinquishment of such adverse claim, and a withdrawal of the protest against the said application for the Clara mining claim.

As to the disputed premises within the Central mining claim, the defendant relies upon his patent, which is admitted to include the land in controversy, and was free from any conflict with the Central mining claim at the date of its issue. He claims this patent to be conclusive of the legal title, and that it justifies the presumption that all the prerequisite facts and acts prescribed by law were complied with. The appellant contends that the patent is void, because it was issued in violation of the mining laws of the Blue Ledge mining district in which the location was made, in that those mining laws, which have the force of a public statute, fixed the width of mining locations within that district at 200 feet. The patent was for a location of 600 feet.

The first issue to be determined is, whether the complaint is sufficient to authorize the admission of evidence impeaching the validity of a patent, or to sustain a judgment annulling it. This question was directly presented in the case of *Ely* v. *New Mexico & Arizona Railroad Co.*, recently decided by this court, 129 U. S.

291 [*ante*, 688]. That was an action commenced in a territorial court under the statutes of that Territory, almost literally the same as the statutes of Utah under which this action arose, and the prayer for relief was precisely the same in both complaints. The court held, in that case, that the rule enforced in the Circuit and District Courts of the United States, that a bill in equity to quiet title or remove clouds must show a legal and equitable title in the plaintiff, and set forth the facts and circumstances on which he relies for relief, does not apply to an action in the territorial court founded upon territorial statutes, which unite legal and equitable remedies in one form of action. The complaint in the present case, in compliance with the requirements of the Prac-
[261] tice Act of Utah Territory, states in concise language the two ultimate facts, upon which the claim for relief depends, that the plaintiff is in possession of the property, and that the defendant claims an interest or an estate therein adverse to him. These are sufficient to require the nature and character of the adverse claim on the part of the defendant to be set up, inquired into, and judicially determined, and the question of title finally settled.

The only question, therefore, which remains for consideration is, whether the proofs in the agreed statement of facts, which are incorporated in the findings of fact, show that the patent should have embraced a width of only 200 feet. By § 2319, Rev. Stat., mineral lands are open to purchase under regulations prescribed by law, and according to the local custom and rules of miners in the several mining districts, not inconsistent with the laws of the United States. Counsel for appellant cites the rules adopted in the Blue Ledge mining district, May 17, 1870, to sustain his position. One of these rules, § 4, provides that "The surface width of any mining location shall not exceed 100 feet in width on each side of the wall-rocks of said lode." Had that regulation remained in existence and been in operation at the time the Clara mining claim was located, its effect upon the legality and validity of that location, at least as to all the land in excess of 200 feet, could not be doubted; but we find that the miners of Blue Ledge mining district frequently changed their rules in several important particulars, among them those relating to the width of mining locations. We find in the record the "minutes of a miners' meeting, held on May 4, 1872, to alter and amend the laws of the Blue Ledge mining district." It is an agreed fact that, on the day of that meeting, it was known to those miners that an Act of Congress, relating to the location and extent of mining claims upon mineral lands of the United States, had passed, or was about to be passed. Among the other alterations adopted at that meeting, and, as seems to be agreed, in anticipation of the Act of Congress, they provided in § 14 that "The surface width shall be governed by laws of the United States of America."
[262] And in § 19 they add the general repealing clause. The Act of Congress, which was passed May 10, 1872, provides as follows:

"A mining claim located after the 10th day of May, 1872, whether located by one or more persons, may equal, but shall not exceed, 1500 feet in length along the vein or lode. . . . No claim shall extend more than 300 feet on each side of the midd'e of the vein at the surface, nor shall any claim be limited by any mining regulation to less than twenty-five feet on each side of the middle of the vein at the surface, except where adverse rights existing on the 10th of May, 1872, render such limitation necessary." § 2320, Rev. Stat.

The Clara mining claim, it is conceded, was located under the by-law, and the Act of Congress just quoted. It was located, officially surveyed for application for patent, and formally presented to the Land Office for patent, before the Central mine was located. It is admitted that these by-laws were before the Commissioner of the General Land Office and formed a part of the application. The question as to which of these provisions was in force was one of fact, determinable by the commissioner, whose duty it was also to take official notice of the statute upon the subject. He decided as a fact, that the local laws of the district as to the width of the location had not been exceeded in this instance.

Whether this decision of the Commissioner as to a fact within his jurisdiction goes to the full extent claimed, we need not decide. In every view, we think it was correct, and that the patent issued by him was according to law, and, therefore, valid.

The judgment of the Court below is affirmed.

THE BALTIMORE AND POTOMAC RAILROAD COMPANY, *Plff. in Err.*, [210]
v.
THADDEUS A. HOPKINS.

(See S. C. Reporter's ed. 210-226.)

Judgments of courts of District of Columbia and the Territories, when reviewable—federal question, what is—action of nuisance—when no federal question arises.

1. Under the Act of Congress regulating appeals from the District of Columbia and the Territories, it is sufficient if the validity of a statute of, or authority exercised under, the United States is drawn in question, in order to justify a review of the decision by this court, irrespective of the conclusion reached.

2. Whenever the power to enact a statute as it is by its terms, or is made to read by construction, is fairly open to denial and denied, the validity of such statute is drawn in question, but not otherwise.

3. "The validity of a statute," as these words are used in the Act of Congress, refers to the power of Congress to pass the particular statute, and not to mere judicial construction as contradistinguished from a denial of the legislative power.

4. In an action for injuries resulting from a nuisance maintained by a railroad company in a public street in front of plaintiff's house, by an unlawful use of the street for its tracks, and from noises, cinders, etc., where the railroad company claimed the right to use the street under certain statutes of the United States, and the trial court did not deny the right of the company to use the street, but limited its right to the use held by it to be authorized by such statutes, *held*, that the validity of no Act of Congress or authority under the United States was drawn in question so as to give this court jurisdiction.

[No. 1173.]

Submitted Nov. 26, 1888. Decided April 1, 1889.

IN ERROR to the Supreme Court of the District of Columbia, to review a judgment of that court in General Term affirming a judgment of the Special Term in favor of plaintiff for damages in an action for a nuisance.

On motion to dismiss. *Granted.*

Statement by *Mr. Chief Justice* **Fuller:**

This was an action on the case brought by Hopkins in the Supreme Court of the District of Columbia against the Baltimore and Potomac Railroad Company for injuries alleged by him to have resulted from a nuisance maintained by the railroad company on the public street in front of his door, from the 5th day of October, 1880, to the 5th day of October, 1883, the date of the commencement of the suit, consisting in suffering great numbers of freight cars to remain on said street for an unreasonable length of time; in shifting cars back and forth in an unreasonable manner, with engines making disturbing noises and giving out volumes of smoke, cinders, etc., the cars being often filthy and emitting offensive orders, etc.

The freight station of the company was situated in square 386, at the original terminus of the road between Ninth and Tenth Streets on Maryland Avenue. Hopkins' dwelling house was in the square opposite on the north side of Maryland Avenue between the same lateral streets.

[211] On the trial of the cause the plaintiff gave evidence tending to prove the truth of the allegations in his declaration, and the defendant gave evidence in its own defense, and, among other things, to establish that the authorities of the District of Columbia in 1874 inclosed the tracks of the railroad with a line of stone curbing on each side about six inches higher than the adjacent surface of the streets, and that the tracks were elevated so as to be flush with this curbing; that the point between Ninth and Tenth Streets was regarded and treated as the termini of two lines of railroad, one coming from Virginia and the other from Maryland, and that the freight trains habitually stopped there as at the end of the route, to change engines, etc.; and it was claimed on behalf of defendant that it possessed and exercised authority by virtue of grants from the United States to do all that it did do in the premises, the validity of which authority, it is now insisted, was denied by the court.

Among other instructions given by the court, at plaintiff's request, was the following:

"8. The defendant company, under its charter, had no right to convert Maryland Avenue, between 9th and 10th Streets, into a freight yard by using the same for loading or unloading its cars, or to incumber said place with cars by leaving them standing there an unreasonable time when not in use, or to use said part of the avenue for making up freight trains or shifting the same, except so far as may be reasonably necessary for the purpose of carefully carrying cars out of said station over the different tracks for the purpose of making up freight trains; and, if the jury shall find from the evidence that the defendant company did use said parts of Maryland Avenue between the times named in the declaration for such loading or unloading of cars, or incumbered the same by leaving the cars standing there an unreasonable time when not in use, and used the same for making up and shifting its freight trains (except in so far as was reasonably necessary in connection with the careful carrying of such cars into the freight station, or the careful carrying of such cars out of the station over the different tracks for the purpose of making up freight trains), and shall further find that such [212] acts on the part of the defendant interfered with the comfortable enjoyment by the plaintiff of his dwelling house, No. 941 Maryland Avenue, then the plaintiff is entitled to recover."

And by instruction 7 the jury were told that—

"The plaintiff is not entitled to recover for any annoyances, discomforts, or inconveniences to himself or his family, or for any injury to the use and enjoyment of said dwelling house, which resulted from such uses of Maryland Avenue by the defendant as were reasonably incident to the careful conduct of its through business, and to the maintenance and careful use of its freight depot or station, abutting on the south side of said avenue between said 9th and 10th Streets southwest."

And the court gave, on defendant's behalf, these instructions:

"1. The defendant is entitled to make such careful use of the tracks between 9th and 10th Streets on Maryland Avenue as may be necessary for the lawful use and enjoyment of its freight depot or station opposite the plaintiff's premises and on square 386.

"2. The plaintiff is not entitled to recover anything in this case for noise, smoke, odors, or any other inconveniences suffered by him or his family by reason of the lawful use by the defendant of the freight station or the tracks in the street in front of the plaintiff's property; and the burden of proof is upon the plaintiff to point out to the jury by satisfactory testimony the acts of the defendant which were unlawful and unauthorized, if any such there were.

"3. The plaintiff, under his declaration and upon the evidence, cannot recover anything under or upon the third and fourth counts of his declaration.

"5. If the jury shall find from the evidence that the Board of Public Works or the Commissioners of the District of Columbia erected or caused to be erected a stone curb higher than the surface of the adjacent parts of Maryland Avenue on each side of the railroad tracks, in front of the plaintiff's premises, on said Maryland Avenue between 9th and 10th Streets, and raised the grade of the street between said curb line, then the defendant is not liable to the plaintiff for any inconvenience or obstruction caused by such curb lines.

"6. The Board of Public Works or the Com- [213] missioners of the District of Columbia were authorized by law to erect the curb lines along the outside of the tracks of the defendant and to raise the grade between them, and the said board and their successors had and have lawful authority to maintain the same.

"10. The plaintiff, under the declaration in this case and upon the evidence, cannot recover for injury or inconvenience caused by any obstruction or obstructions in or upon Maryland

Avenue without showing special damage to himself.

"14. The defendant possesses the lawful right in the conduct of its business to place its trains containing cars loaded with cattle, hogs, or other animals, or vegetables, fruit, fertilizers, or other odoriferous freight, on the tracks in front of the plaintiff's premises for such a reasonable time as may be necessary to enable other trains to pass and also to enable the defendant to take cars out of and to put cars into such trains, and before any damages can be assessed in favor of the plaintiff because of the standing of such cars upon the tracks in front of the plaintiff's premises the plaintiff must show, by satisfactory proof, that such cars on such occasion were kept standing on said tracks for an unreasonable length of time and that the plaintiff was thereby specially injured.

"17. The defendant was authorized and empowered to unload railroad iron upon the surface of the streets in front of the plaintiff's premises for the purpose of repairing its tracks in front of the plaintiff's premises on Maryland Avenue between 9th and 10th Streets.

"19. The defendant possessed the lawful right to use the several tracks on Maryland Avenue between 9th and 10th Streets for carefully passing and moving thereon its trains, either loaded or empty, north and south; and for any injury or inconvenience unavoidably caused by such passing and moving of trains the defendant is not liable."

But refused to give at defendant's request, among others, the following:

"10. The plaintiff is not entitled to recover anything on account of dust or noises caused [214] by the loading and unloading of cars on or within the sixty-foot space between the lateral streets inclosed by the Board of Public Works of the District of Columbia.

"11. The space of sixty feet inclosed by the two lines of curb by the Board of Public Works within which are the tracks of the railroad, and between the streets running north and south, were set aside by the proper authorities of the District of Columbia for railroad purposes, and the plaintiff cannot recover under the pleadings in this case for any discomfort to him or his family, or other injury caused by the loading on unloading of cars at that place.

"14. The defendant has the legal right to the unlimited use of the tracks in the vicinity of its freight depot, in front of the plaintiff's premises, for the purposes of its freight depot between Ninth and Tenth Streets, opposite the plaintiff's premises, provided such tracks are carefully and skillfully used by the defendant."

The court also instructed the jury upon its own motion:

"Congress allowed the company to run its road into the District, along certain streets and avenues, to a certain point—that is, to 9th Street, where the present station is located. We have supposed that that implied a right to construct a station building and to construct tracks in the street; but if the business of the company increase beyond the capacity of that freight yard to accommodate it, we have thought that that was no reason which would justify the company in occupying the public streets for the purposes of a freight yard, and that they had no right to stow away or store away their cars and freight in the public streets, nor had they the right to occupy the streets in making up trains to dispatch north and south; but we thought that their duty was to acquire more property and to enlarge their freight yard for these purposes. If, in point of fact, without authority of law they did occupy the streets for these purposes it was an illegal thing; but if nobody was hurt by it, it would simply be a public nuisance which would be the subject of an indictment and would not give any private person a right of action against the company; but if, in addition to being a public nuisance, it became a grievance to private persons owning property [215] in that neighborhood, by reason of the obstruction of the street, the noise and the disagreeable odors, then it was a private wrong, also, which these parties are entitled to have redressed. . . . I should further caution you against supposing that the plaintiff is entitled to recover for all the inconvenience he may suffer in consequence of the railroad being located there at all. The railroad company has the right to lay its tracks there by authority of law; and everything which is the inevitable result of the legal use of the road are things which the law does not consider grievances, and does not allow damages for. For example, the trains have a right to pass over the street, to stop there at the station, and to go on in each direction. That necessarily gives some inconvenience to everybody. The noise, the smoke, and the dust along the street is a disagreeable thing to the whole neighborhood; but, inasmuch as the law authorizes that, it is not the subject of a private action. It is only the illegal use of the street which will give a person a right of action against the company, and this I have already explained. The inevitable consequences of the road being located there and of trains traveling in a legal way over the road are what the law calls *"damnum absque injuria"*—that is, an injury without any wrong or damage. You will confine your consideration entirely to the temporary inconvenience occasioned by the unlawful occupation of the street for the purposes that have been mentioned."

The jury found for the plaintiff and assessed his damages at one thousand three hundred and twenty-eight dollars, and judgment was entered on the verdict, which was subsequently affirmed in general term.

To reverse this judgment the writ of error was sued out which defendant in error now moves to dismiss.

The following are the statutory provisions relating to the Baltimore and Potomac Railroad which are deemed material.

The first section of the Act of Congress of February 5, 1867 (14 Stat at L. 387), is as follows:

"Whereas, it is represented to this present Congress that the Baltimore and Potomac Railroad Company, incorporated by an Act of the [216] General Assembly of Maryland, entitled 'An Act to Incorporate the Baltimore and Potomac Railroad Company,' passed the sixth day of May, eighteen hundred and fifty-three, are desirous, under the powers which they claim to be vested in them by the provisions of the before recited Act to construct a lateral branch from

the said Baltimore and Potomac Railroad to the District of Columbia:

"Therefore, Be it enacted by the Senate and House of Representatives of the United States of America in Congress assembled, That the Baltimore and Potomac Railroad Company, incorporated by the said Act of the General Assembly of Maryland, shall be, and they are hereby, authorized to extend into and within the District of Columbia, a lateral railroad, such as the said company shall construct or cause to be constructed, in a direction towards the said District, in connection with the railroad which they are about to locate and construct from the City of Baltimore to the Potomac River, in pursuance of their said Act of incorporation; and the said Baltimore and Potomac Railroad Company are hereby authorized to exercise the same powers, rights, and privileges, and shall be subject to the same restrictions in the extension and construction of the said lateral railroad into and within the said District as they may exercise or are subject to, under and by intent of their said charter or Act of incorporation, in the extension and construction of any railroad within the State of Maryland; and shall be entitled to the same rights, compensation, benefits, and immunities, in the use of the said road, and in regard thereto, as are provided in their said charter, except the right to construct any lateral road or roads within the said District, from the said lateral branch or road hereby authorized; it being expressly understood that the said Baltimore and Potomac Railroad Company shall have power only to construct from the said Baltimore and Potomac Railroad one lateral road within the said District to some point or terminus within the City and County of Washington, to be determined in the manner hereinafter mentioned."

By section 8 it was provided that the company "in passing into the District aforesaid, [217] and constructing the said road within the same, shall enter the City of Washington at such place, and shall pass along such public street, or alley, to such point or terminus within the said city as may be allowed by Congress, upon presentation of survey and map of proposed location of said road: *Provided*, That the level of said road within the said city shall conform to the present graduation of the streets, unless Congress shall authorize a different level."

The twelfth section of the Act of the Legislative Assembly of Maryland, referred to in the above mentioned Act of Congress (Laws, Maryland, 1853, p 234), reads thus:

"SEC. 12. And be it enacted, That the president and directors of the said company shall be, and they are hereby, invested with all the rights and powers necessary to the construction, working, use, and repair of a railroad from some suitable point in or near the City of Baltimore, and thence within one mile of the Town of Upper Marlboro, in Prince George's County, and as near to said town, within the limits of said distance, as may be practicable, and by or near the Town of Port Tobacco in Charles County, to a point on the Potomac River, to be selected by the president and directors of said company hereby incorporated, not higher up than Liverpool Point, and not lower down than the mouth of St. Mary's River, with such branches at any point of said railroad, not exceeding twenty miles in length, as the said president and directors may determine. The said road when completed not to be more than sixty-six feet wide, except at or near its depots or stations, where the width may be made greater, with as many tracks as the president and directors may deem necessary; and the said president and directors may cause to be made, or may contract with others for making, said railroad or any part of of it, and they or their agents, or those with whom they may contract or their agents, may enter upon and use and excavate any lands which may be wanted for the site of said road or the erection of warehouses or other works necessary for the said road or for its construction and repair; and that they may build bridges, fix scales and weights, lay rails, may take and use earth, gravel, stone, timber, or other materials which may be needed for the construction [218] and repair of the said road or any of its works, and may make and construct all works whatever which may be necessary and expedient in order to the proper completion and maintenance of the said road, and they may make, or cause to be made, lateral railways in any direction whatever from the said railroad, and for the construction, repair and maintenance thereof shall have all the rights and powers hereby given in order to the construction and repair of said principal railroad, and may also own and employ steamboats or other vessels to connect the said railroad or railroads with other points by water communication: *Provided*, Nothing herein contained shall be construed to authorize the said company to take private property for their use without compensation agreed upon by the company and the owners, thereof, or awarded by a jury, as hereinafter provided, being first paid or tendered to the party entitled to receive such compensation."

By Act of Congress of March 18, 1869 (16 Stat. at L. 1, 2), it was declared that the Baltimore and Potomac Railroad Company "may enter the City of Washington with their said railroad and construct the same within the limits of said city on and by whichever one of the two routes herein designated the said company may elect and determine upon;" and by the Act of March 25, 1870 (16 Stat. at L. 78, § 2, a modification of the second of these two routes was authorized. The terminal point in each was described as a point at the intersection of South C and West Ninth Streets.

The company made choice of the second of the projected routes, commencing on the western shore of the Eastern Branch, between South L and South M Streets, and thence passing through K Street and Virginia Avenue to the terminal point on Ninth Street.

By Act of June 21, 1870 (16 Stat. at L. 161), Congress enacted "that the Baltimore and Potomac Railroad Company be, and they are hereby, authorized and empowered to *extend their lateral branch*, authorized by the Act to which this is a supplement, and by former supplements to said Acts, *by the way of Maryland Avenue, conforming to its grade*, to the viaduct over the Potomac River at the City of Wash- [219] ington, known as the Long Bridge, and to extend their tracks over said bridge, and connect

with any railroads, constructed or that may hereafter be constructed, in the State of Virginia," the Act authorizing the railroad company, to effect these purposes, to take possession of and use the bridge free of cost and maintain the same, etc. By virtue of the authority granted by this Act the railroad extended its "lateral branch" to the Potomac River from Ninth Street south, by way of Maryland Avenue; and it was further authorized by Act of March 3, 1871 (16 Stat. at L. 585), in making this extension, to change the grade of Maryland Avenue from Twelfth Street to the Long Bridge in the manner specified in that Act, under the supervision of the municipal authorities of Washington.

The Act of Congress of May 21, 1872 (17 Stat. at L. 140), relating to the establishment of the passenger depot of the company at Sixth and B Streets, makes mention of no streets or avenues except B Street and Sixth Street and Virginia Avenue.

Messrs. **Samuel Maddox** and **S. S. Henkle**, for defendant in error, in support of motion:

The plaintiff below claimed $5,000, but the amount in controversy, as to the defendant, is fixed by the judgment.

Walker v. *U. S.* 71 U. S. 4 Wall. 164 (18:319).

No federal question is made in the record.

This court will not go outside of it, to the opinion or elsewhere, to ascertain whether one was in fact decided.

Moore v. *Miss.* 88 U. S. 21 Wall. 639 (22:654) *Rector* v. *Ashley*, 73 U. S. 6 Wall. 142 (18:733); *Walker* v. *Villavaso*, 73 U. S. 6 Wall. 128 (18:854); *Millingar* v. *Hartupee*, 73 U. S. 6 Wall. 261 (18:829); *Merced Mining Co.* v. *Boggs*, 70 U. S. 3 Wall. 304 (18:245); *Murdock* v. *Memphis*, 87 U. S. 20 Wall. 628 (22:441).

Mr. **Enoch Totten**, for plaintiff in error, in opposition:

Statutory authority to build and conduct a railroad includes the authority to build turnouts or side tracks, turntables, switches, depots, etc., those permanent and irremovable appendages which constitute parts of the complete structure.

Lake Superior & M. R. Co. v. *U. S.* 93 U. S. 453-4 (23:971) *Rock Creek Twp.* v. *Strong*, 96 U. S. 276 (24:815).

The decision of this court in *Dupasseur* v. *Rochereau*, 88 U. S. 21 Wall. 134 (22:590), seems to be decisive of the question of jurisdiction presented here.

See also *Embry* v. *Palmer*, 107 U. S. 9 (27:348); *Day* v. *Gallup*, 69 U. S. 2 Wall. 97 (17:855); *Verden* v. *Coleman*, 66 U. S. 1 Black, 472 (17:161); *Chicago L. Ins. Co.* v. *Needles*, 113 U. S. 574 (28:1084); *Balt. & O. R. Co.* v. *Md.* 88 U. S. 21 Wall. 456 (22:678); *McGuire* v. *Mass.* 70 U. S. 3 Wall. 382, 387 (18:164, 165); *Hall* v. *Jordan*, 82 U. S. 15 Wall. 393 (21:72).

[221] *Mr. Chief Justice* **Fuller** delivered the opinion of the court:

Appellate jurisdiction was conferred on this court by the 25th section of the Judiciary Act of 1789, over final judgments and decrees in any suit in the highest court of law or equity of a State in which a decision in the suit could be had, in three classes of cases: *First*, where is drawn in question the validity of a treaty, or statute of, or an authority exercised under, the United States, and the decision is against their validity; *secondly*, where is drawn in question the validity of a statute of, or an authority exercised under, any State, on the ground of their being repugnant to the Constitution, treaties, or laws of the United States, and the decision is in favor of such their validity; *thirdly*, where is drawn in question the construction of any clause of the Constitution, or of a treaty, or statute of, or commission held under, the United States, and the decision is against the title, right, privilege, or exemption specially set up or claimed by either party, under such clause of the said Constitution, treaty, statute or commission. 1 Stat. at L. 73, 85.

By the second section of the Act of February 5, 1867 (14 Stat. at L. 385, 386), this original 25th section was re-enacted with certain changes, and among others the words "or where is drawn in question the construction of any clause of the Constitution, or of a treaty, or statute of, or commission held under, the United States, and the decision is against the title, right, privilege, or exemption specially set up or claimed by either party, under such clause of the said Constitution, treaty, statute or commission," were made to read "or where any title, right, privilege, or immunity is claimed under the Constitution, or any treaty or statute of, or commission held, or authority exercised under the United States, and the decision is against the title, right, privilege, or immunity [222] specially set up or claimed by either party under such Constitution, treaty, statute, commission, or authority," and this was carried into section 709 of the Revised Statutes.

The Act of Congress entitled "An Act Regulating Appeals From the Supreme Court of the District of Columbia and the Supreme Courts of the Several Territories," approved March 3, 1885 (23 Stat at L. 443), provides:

"That no appeal or writ of error shall hereafter be allowed from any judgment or decree in any suit at law or equity in the Supreme Court of the District of Columbia, or in the Supreme Court of any of the Territories of the United States, unless the matter in dispute, exclusive of costs, shall exceed the sum of five thousand dollars.

"SEC. 2. That the preceding section shall not apply to any case wherein is involved the validity of any patent or copyright, or in which is drawn in question the validity of a treaty or statute of or an authority exercised under the United States; but in all such cases an appeal or writ of error may be brought without regard to the sum or value in dispute."

When the validity of a statute of, or authority exercised under, the United States is drawn in question in a state court, the decision of the latter must be against its validity in order to justify a review of such decision; but under this Act it is sufficient if the validity is drawn in question irrespective of the conclusion reached. So that the inquiry is confined to whether the validity of such a statute or authority is actually controverted.

In *Dupasseur* v. *Rochereau*, 88 U. S. 21 Wall. 130, 134 [22:588, 590], *Mr. Justice* Bradley, delivering the opinion of the court, says:

"Where a state court refuses to give effect to the judgment of a court of the United States rendered upon the point in dispute, and with jurisdiction of the case and the parties, a question is undoubtedly raised which, under the Act of 1867, may be brought to this court for revision. The case would be one in which a a title or right is claimed under an authority exercised under the United States, and the decision is against the title or right so set up. It would thus be a case arising under the laws of [223] the United States establishing the circuit court and vesting it with jurisdiction." This is so because a claim of right or title under an authority exercised under the United States was sufficient to give jurisdiction under that Act; whereas, the Act of 1885 does not so provide, but only that *the validity* of the authority must be drawn in question. The distinction is palpable between a denial of the validity of the authority and a denial of a title, right, privilege, or immunity claimed under it.

That part of original section 25, and of the Act of 1867, as to decisions in favor of the validity of a statute of, or of an authority exercised under, any State, when drawn in question on the ground of their being repugnant to the Constitution, treaties, or laws of the United States, has been frequently passed upon, and the distinction between the construction of a statute, or the extent of an authority, and the validity of a statute, or of an authority, pointed out. Thus in *Commercial Bank* v. *Buckingham*, 46 U. S. 5 How. 317 [12: 169], where a general law had declared all banks liable to pay six per cent interest on their notes, when they had refused payment on demand, and a subsequent Act, incorporating the bank in question, provided for the payment of twelve per cent, and the question was whether the bank was liable to pay eighteen, this court held that the question submitted to and decided by the state court was one of construction and not of validity. There both the prior and subsequent statutes were admitted to be valid under any construction of them, "And therefore no construction placed by the state court on either of them could draw in question its validity, as being repugnant to the Constitution of the United States, or any Act of Congress." *Bridge Proprietors* v. *Hoboken Co.* 68 U. S. 1 Wall. 116, 144 [17: 571, 576].

In *Lawler* v. *Walker*, 55 U. S. 14 How. 149 [14: 364], where, in 1816, the Legislature of Ohio had passed an "Act to prohibit the issuing and circulation of unauthorized bank paper," and, in 1839, an Act amendatory thereof, and the question arose whether or not a canal company, incorporated in 1837, was subject to these Acts, it was held that the Supreme Court of Ohio, in deciding that it was, "only gave a construction to an Act of Ohio, which neither of itself nor by its application involved [224] in any way a repugnancy to the Constitution of the United States, by impairing the obligation of a contract."

Whenever the power to enact a statute as it is by its terms, or is made to read by construction, is fairly open to denial and denied, the validity of such statute is drawn in question, but not otherwise.

In *Millingar* v. *Hartupee*, 73 U. S. 6 Wall. 258, 262 [18: 829, 830], it was held that the word "authority" stands upon the same footing with "treaty" or "statute;" and said the court, through *Chief Justice* Chase:

"Something more than a bare assertion of such an authority seems essential to the jurisdiction of this court. The authority intended by the Act is one having a real existence, derived from competent governmental power. If a different construction had been intended, Congress would doubtless have used fitting words. The Act would have given jurisdiction in cases of decisions against claims of authority under the United States." "In many cases the question of the existence of an authority is so closely connected with the question of its validity that the court will not undertake to separate them, and in such cases the question of jurisdiction will not be considered apart from the question upon the merits, or except upon hearing in regular order. But where, as in this case, the single question is not of the validity but of the existence of an authority, and we are fully satisfied that there was, and could have been, no decision in the state court against any authority under the United States existing in fact, and that we have, therefore, no jurisdiction of the case brought here by writ of error, we can perceive no reason for retaining it upon the docket."

So in *Lewis* v. *Campau*, 70 U. S. 3 Wall. 106 [18: 211], where the final judgment of the highest court of law and equity in the State of Michigan was that the revenue stamps attached to a deed offered in evidence and objected to as not having stamps proportioned to the value of the land conveyed, were sufficient, was held not a subject for review by this court under the 25th section of the Judiciary Act; and in *Merced Min. Co.* v. *Boggs*, 70 U. S. 3 Wall. 304, 310 [18: 245, 247] which was an action of ejectment brought for the possession of certain min- [225] eral lands in California, where the defendant contended that he was in possession by virtue of an authority inferred from the general policy of the United States in relation to mines of gold and silver, *Chief Justice Chase*, speaking for the court, in dismissing the writ of error, said:

"The decision was, that no such license existed; and this was a finding by the court of a question of fact upon the submission of the whole case by the parties, rather than a judgment upon a question of law. It is the same case, in principle, as would be made by an allegation in defense to an action of ejectment, of a patent from the United States with an averment of its loss or destruction, and a finding by the jury that no such patent existed, and a consequent judgment for the defendant (plaintiff). Such a judgment would deny, not the validity, but the existence of the patent. And this court would have no jurisdiction to review it."

In *Gill* v. *Oliver*, 52 U. S. 11 How. 529 [13: 799], under a treaty between the United States and Mexico a sum of money was awarded to be paid to the members of the Baltimore Mexican Company, and the proceeds of one of the shares of this company were claimed by two parties, and the judgment of the Court of Appeals of Maryland as to which of the claimants was entitled to the money was held not reviewable by

this court. *Williams* v. *Oliver*, 53 U. S. 12 How. 111 [13: 915].

The case at bar does not involve the exercise of an authority under the United States, in the sense of an authority to act for the Government; but it is claimed that the railroad company acted under certain statutes of the United States authorizing such action, and that the validity of these statutes, or of authority under them, was denied.

But the Supreme Court of the District of Columbia did not deny the right of the defendant company to use its tracks in Washington on Maryland Avenue between Ninth and Tenth Streets, in a lawful manner, for the purpose of transacting its lawful business; but, on the contrary, the jury was instructed that the plaintiff was not entitled to recover for any annoyances, discomforts, or inconveniences, [226] which resulted from such uses of Maryland Avenue by the railroad company "as were reasonably incident to the careful conduct of its through business, and to the maintenance and careful use of its freight depot or station abutting on the south side of said avenue between said Ninth and Tenth Streets southwest," and the lawful uses to which the street might be put by the railroad company were clearly explained.

The jury were told that all stoppage of trains and shifting of cars necessary for carrying cars out of its freight depot over the different tracks for the purpose of making up freight trains were lawful. The right of the railroad company to establish freight stations or to lay as many tracks "as its president and board of directors might deem necessary" was not questioned. But the court also held that the company was not justified in occupying the public streets for the purposes of a freight yard as such, because the various statutes bearing upon the matter did not authorize such occupation, with which conclusion we are inclined to agree, though we forbear a determination of the point until presented in a case properly pending before us. The validity of the statutes, and the validity of authority exercised under them, are, in this instance, one and the same thing; and "the validity of a statute," as these words are used in this Act of Congress, refers to the power of Congress to pass the particular statute at all, and not to mere judicial construction as contradistinguished from a denial of the legislative power. In our opinion the validity of no Act of Congress, or authority under the United States, was so drawn in question here as to give us jurisdiction, and therefore, as the amount of the judgment did not exceed five thousand dollars,

The writ of error must be dismissed.

---

[230] ROBERT S. STEVENS, *Plff. in Err.*,

v.

WILLIAM NICHOLS.

(See S. C. Reporter's ed. 230-232.)

Jurisdiction dependent on citizenship — Case when removable — defective allegation — remanding case to state court.

1. Upon writ of error from the Circuit Court of the United States, in cases where jurisdiction depends upon the citizenship of the parties, such citizenship or the facts which constitute it, should be distinctly averred in the pleading or appear affirmatively in some other part of the record.

2. A case is not removable from the state court unless it appears affirmatively in the petition for removal, or in the record, that at the commencement of the action, and also when the removal was asked, the defendants were citizens of another State than the one in which the plaintiff was a citizen.

3. Where the petition for removal does not allege the citizenship of the parties except at the date when it was filed, and it is not shown elsewhere in the record that defendants were, at the commencement of the action, citizens of a State other than the one of which the plaintiff was, at that date, a citizen, this court cannot consider the merits of the case.

4. In such case the judgment will be reversed, on the ground that the circuit court had no jurisdiction, and the case remanded to that court, with directions to send it back to the state court.

[No. 190.]

Argued March 11, 1889. Decided April 1, 1889.

IN ERROR to the Circuit Court of the United States for the Western District of Missouri, to review a judgment against defendant below in an action to recover amounts due on subscriptions of stock and to have such amounts applied upon a judgment against the corporation. *Reversed.*

Statement by *Mr. Justice* **Harlan:**

This action was commenced on the 25th day of July, 1881, in one of the Courts of Missouri, by the defendant in error against the Texas and Atlantic Refrigerator Car Company, a corporation of that State, Robert S. Stevens, and Henry D. Mirick. Its object was to reach, and have applied, in satisfaction of a judgment obtained by the plaintiff against the car company, the several amounts due from Stevens and Mirick on their subscriptions of stock in that company.

Stevens and Mirick filed a joint petition for the removal of the case into the Circuit Court of the United States, upon the ground of the diverse citizenship of the parties. The allegation in the petition was that the plaintiff "*is* a citizen of the State of Missouri," and that the defendants "*are* not citizens of the State of [231] Missouri, but *are* citizens of the State of New York."

The state court made an order for the removal of the case to the Circuit Court of the United States. In the latter court the necessary pleadings having been filed, the case was tried, resulting in a verdict and judgment against Stevens for the sum of $5,027.33, and against Mirick for the sum of $627.41. The court having overruled a motion for new trial, and also a motion in arrest of judgment, Stevens has brought the case here for review.

No question was made in the court below or in this court as to the right of Stevens and Mirick to remove the case from the state court.

Messrs. **A. H. Garland** and **James Carr**, for plaintiff in error:

If the court had no jurisdiction over the person or subject matter, its judgment and orders are regarded as nullities.

Thompson v. *Whitman*, 85 U. S. 18 Wall. 457 (21: 897); *Knowles* v. *Logansport Gaslight & Coke Co.* 86 U. S. 19 Wall. 58 (22: 70); *Hall* v. *Lanning*, 91 U. S. 160 (23: 271); *Christmas* v. *Russell*, 72 U. S. 5 Wall. 305 (18: 479); *Elliott* v. *Peirsol*, 26 U. S. 1 Pet. 328 (7: 164); *Re Sawyer*, 124 U. S. 200 (31: 402); *Williams* v. *Whitlock*, 14 Mo. 552.

Mr. **Geo. P. B. Jackson,** for defendant in error:

This proceeding may not have been removable to the federal court; but the plaintiff in error procured the removal for his own benefit and is now estopped to question the regularity of it.

Bushnell v. *Kennedy*, 76 U. S. 9 Wall. 387-393 (19: 736-739); *Seward* v. *Comeau*, March 21st, 1881, 103 U. S., Book 26, Law ed. 438;* *Ayers* v. *Watson*, 113 U. S. 594 (28: 1093).

Mr. Justice **Harlan** delivered the opinion of the court:

1. It was held in *Robertson* v. *Cease*, 97 U. S. 646, 649 [24: 1057, 1058], upon writ of error from a Circuit Court of the United States, that "In cases where jurisdiction depends upon the citizenship of the parties, such citizenship, or the facts which in legal intendment constitute it, should be distinctly and positively averred in the pleadings, or they should appear affirmatively and with equal distinctness in other parts of the record." *Mansfield, C. & L. M. R. Co.* v. *Swan*, 111 U. S. 379, 382 [28: 462, 463]; *Hancock* v. *Holbrook*, 112 U. S. 231 [28: 715]; *Thayer* v. *Life Asso.* 112 U. S. 719 [28: 865]; *Continental Ins. Co.* v. *Rhoads*, 119 U. S. 239 [30: 380].

2. The case was not removable from the state court, unless it appeared affirmatively in the petition for removal, or elsewhere in the record, that at the commencement of the action, as well as when the removal was asked, Stevens and Mirick were citizens of some other State than the one of which the plaintiff was, at those respective dates, a citizen. *Gibson* v. [232] *Bruce*, 108 U. S. 562 [27: 825]; *Houston & T. C. R. Co.* v. *Shirley*, 111 U. S. 358, 360 [28: 455, 456]; *Mansfield, C. & L. M. R. Co.* v. *Swan, supra; Akers* v. *Akers*, 117 U. S. 197 [29: 888].

3. The petition for removal does not allege the citizenship of the parties except at the date when it was filed, and it is not shown elsewhere in the record that Stevens and Mirick were, at the commencement of the action, citizens of a State other than the one of which the plaintiff was, at that date, a citizen. The court, therefore, cannot consider the merits of the case. *Metcalf* v. *Watertown*, 128 U. S. 586 [*ante*, 543]; *Morris* v. *Gilmer*, 129 U. S. 315, 325 [*ante*, 690, 693].

The judgment is reversed upon the ground that it does not appear that the Circuit Court had jurisdiction, *and the case is remanded* to that Court, with directions to send it back to the State Court, the plaintiff in error to pay the costs in this Court and in the Court below. *Mansfield, C. & L. M. R. Co.* v. *Swan, supra. Reversed.*

---

[189] NELSON WILLIAMSON, Collector of the TOWNSHIP OF NORTH BRUNSWICK, *Plf. in Err.*,

v.

THE STATE OF NEW JERSEY AND THE MAYOR AND COMMON COUNCIL OF THE CITY OF NEW BRUNSWICK.

(See S. C. Reporter's ed. 189-200.)

New Jersey tax law—impairment of contract—when law may be repealed—taxation by municipal corporation.

1. The second section of the New Jersey Act of 1862, for the taxation of the poor farm and personal property thereon by the Township of North Brunswick, was repealed by the Act of 1866 exempting from taxation property used exclusively for charitable purposes.

2. The second section of the Act of 1862 did not create a contract, the obligation of which could not be constitutionally impaired by the repeal of such second section.

3. Such a grant of the power of taxation by the Legislature to a municipal corporation is subject to revocation, modification and control by the Legislature of the State.

4. There is no element of private property in the right of taxation conferred upon a municipal corporation.

[No. 193.]

Argued March 12, 1889. Decided April 1, 1889.

IN ERROR to the Supreme Court of the State of New Jersey, to review a judgment that an assessment of taxes should be set aside, which had been made upon the poor farm and personal property thereon, in the Township of North Brunswick. *Affirmed.*

The facts are stated in the opinion.

Mr. **John S. Voorhees,** for plaintiff in error:

The right of taxation may be the subject of contract and such contract is within the protection of the Federal Constitution.

Burroughs, Taxn. §§ 66, 109; Cooley, Taxn. 688 f; *Piqua Branch of Bk. of Ohio* v. *Knoop*, 57 U. S. 16 How. 369 (14: 977); *Poindexter* v. *Greenhow*, 114 U. S. 270 (29: 185); *Murray* v. *Charleston*, 96 U. S. 432 (24: 760).

An Act of the Legislature which provides that, for a sufficient consideration, lands shall be exempt from taxation, when accepted, becomes a contract which subsequent legislation cannot impair.

N. J. v. *Wilson*, 11 U. S. 7 Cranch, 164 (3: 303); *Northwestern University* v. *People*, 99 U. S. 309 (25: 387); *Hardy* v. *Waltham*, 7 Pick. 108; *Landon* v. *Litchfield*, 11 Conn. 251.

When a State has authorized a municipal corporation to exercise the power of local taxation, the power cannot be withdrawn.

Wolff v. *New Orleans*, 103 U. S. 358, 367 (26: 395, 399).

If this contract was valid when made, no subsequent action by the State Legislature or judiciary can impair its obligation.

Green v. *Biddle*, 21 U. S. 8 Wheat. 1 (5: 547); *Havemeyer* v. *Iowa Co.* 70 U. S. 3 Wall, 294 (18: 38); *Olcott* v. *Fond du Lac Co.* 83 U. S. 16 Wall. 678 (21: 382).

The property of municipal corporations is protected by the clause in the National Constitution securing the inviolability of contracts.

Grogan v. *San Francisco*, 18 Cal. 590; *Town of Milwaukee* v. *City of Milwaukee*, 12 Wis. 93; *State* v. *Tappan*, 29 Wis. 664; *Hasbrouck* v. *Milwaukee*, 13 Wis. 37; *Aberdeen Academy* v. *Aberdeen*, 13 Smedes & M. 645-647; *Montpelier* v. *East Montpelier*, 29 Vt. 19; *People* v. *Detroit*, 28 Mich. 228; *Lowry* v. *Francis*, 2 Yerg. 534.

The contracts and private property of municipal corporations are secured by the Federal Constitution.

2 Kent, Com. §§ 275, 305; Cooley, Const. Lim. § 287; Cooley, Taxn. 494, 688 f; Dill. Mun. Corp. §§ 36, 40 f and notes, and § 114.

*Not reported in the Official Edition. [Ed.]

Mr. Frederick Weigel and **Peter Adrian,** for defendants in error.

A special law may be repealed by a general one by express words or necessary implication.

State v. *Blake*, 35 N. J. L. 208; *S. C.* 36 N. J. L. 442; *State* v. *Comr. of R. R. Taxation*, 37 N. J. L. 228; *State* v. *Mills*, 34 N. J. L. 180; *State* v. *Williamson*, 44 N. J. L. 165, 46 N. J. L. 204.

The intent to abrogate the particular enactment in an earlier statute, by a general enactment in a later statute, is sufficiently maifested when the provisions of the two statutes are so inconsistent that they cannot stand together.

State v. *Comr. of R. R. Taxation*, 37 N. J. L. 228.

Property dedicated to charity is not subject to taxation.

Louisville v. *Com.* 1 Duv. (Ky.) 295, 298, 299.

The said city and township are both public corporations created for political purposes.

The powers conferred upon them may at any time be repealed at the will of the Legislature.

Cooley, Const. Lim. 3d ed. §§ 192, 193, 235; 1 Dill. Mun. Corp. 3d ed §§ 54, 62; *Piqua Branch of Bk. of Ohio* v. *Knoop*, 57 U. S. 16 How. 369, 380 (14: 977, 981); *U. S.* v. *Balt. & O. R. Co.* 84 U. S. 17 Wall. 322 (21: 597); *Sloan* v. *State*, 8 Blackf. 361; *People* v. *Morris*, 13 Wend. 325; *Jersey City* v. *Jersey City & B. R. Co.* 20 N. J. Eq. 360; *Philadelphia* v. *Fox*, 64 Pa. 169; *Montpelier* v. *East Montpelier*, 29 Vt. 12; *Richland Co.* v. *Lawrence Co.* 12 Ill. 8; *People* v. *Chicago*, 51 Ill. 18; *State* v. *St. Louis Co. Ct.* 34 Mo. 546, 549; *Louisville* v. *Louisville University*, 15 B. Mon. (Ky.) 645; *East Hartford* v. *Hartford Bridge Co.* 51 U. S. 10 How. 511, 541 (13: 518, 531); *Richmond* v. *Richmond & D. R. Co.* 21 Gratt. 604; *Warner* v. *Beers*, 23 Wend. 103, 126; *Purdy* v. *People*, 4 Hill, 391; *Gifford* v. *Livingston*, 2 Denio, 380.

The delegation of such legislative authority to said township was not such a contract as would prevent future legislation upon the same.

1 Dill. Mun. Corp. §§ 61, 63; 2 Kent, Com. 3d ed. § 305; *Rader* v. *Southeasterly Road Dist.* 36 N. J. L. 273; *Bossier Police Jury* v. *Shreveport*, 5 La. Ann. 661; *New Orleans* v. *Hoyle*, 23 La. Ann. 740; *Rankin* v. *Beaird*, 1 Ill. 123; *Holliday* v. *People*, 10 Ill. 214.

[190] *Mr. Justice* **Blatchford** delivered the opinion of the court.

This is a writ of error to the Supreme Court of the State of New Jersey. The case arose on a writ of *certiorari* issued by that court at the instance of the Mayor and Common Council of the City of New Brunswick, to review an assessment for taxation made by the Township of North Brunswick, and a levy made by the collector of that Township, against a farm known as the "poor farm," and personal property thereon, situated in the Township of North Brunswick, and owned by the Mayor and Common Council of the City of New Brunswick. The case arose on the following facts, which were agreed upon by the counsel for the respective parties:

By a special Act of the Legislature of New Jersey, approved February 28, 1860 (Laws of 1860, chap. 67, p. 162), parts of the Townships of North Brunswick and Monroe, in the County of Middlesex, were set off and established as a separate township, to be called East Brunswick, and part of the Township of North Brunswick was set off and established as a separate township, to be called the Township of New Brunswick; and the township committees of the said Townships of North Brunswick, East Brunswick, and New Brunswick were authorized and required to divide the real and [191] personal property of the Township of North Brunswick between said townships.

The poor farm of the original Township of North Brunswick was situate within the limits of what remained of the Township of North Brunswick, after the setting off of the Townships of East Brunswick and New Brunswick, as aforesaid.

By a special Act of the Legislature aproved March 15, 1861 (Laws of 1861, chap. 170, p. 507), the said Township of New Brunswick and the City of New Brunswick were declared to be one corporate body under the name of "The Corporation of the City of New Brunswick," and the said corporation was made subject to all the liabilities of the inhabitants of the Township of New Brunswick.

The poor farm and the personal property thereon were never divided between the Townships of North Brunswick and East Brunswick and the corporation of the City of New Brunswick, but the townships agreed to sell and convey their interests in the same to said corporation.

By a special Act of the Legislature, approved February 18, 1862 (Laws of 1862, chap. 37, p. 52), the township committees of North Brunswick and East Brunswick were authorized to convey all the interests of the said townships in said farm and the personal property thereon to the said corporation; and it was thereby further enacted that the said poor farm and the personal property thereon should be at all times thereafter liable and subject to taxation by the Township of North Brunswick so long as it should be embraced in the limits of said township.

By virtue of the authority thereby given, the township commitees of said townships sold and conveyed said farm and the personal property thereon to said corporation by deed of conveyance bearing date March 27, 1862.

The said corporation of the City of New Brunswick entered into possession of said farm and the personal property thereon under the contract expressed in said deed of conveyance, and is still in possession of the same; and the said farm is still within the limits of the Township of North Brunswick.

The said farm and property have been duly assessed by the Township of North Brunswick [192] each year since said sale and conveyance; and the taxes so assessed have been paid by the corporation of the City of New Brunswick to the Township of North Brunswick, up to and including the year 1877, when further payments were refused on the ground that said poor farm was used exclusively for charitable purposes, and therefore was not liable to taxation.

This *certiorari* brings up the assessment for the year 1878, for the purpose of determining whether said farm and personal property there-

on are liable and subject to taxation by said Township of North Brunswick.

The deed of March 27, 1862, which contains a copy of the Act approved February 18, 1862, is set forth in the margin.*

[193] It was agreed between the attorney for the plaintiff in the *certiorari* and the attorney for [194] the defendant, that the sole question to be discussed in the Supreme Court of New Jersey was whether the poor farm, situated in the Township of North Brunswick, and owned by [195] the City of New Brunswick, was exempt from taxation; and that the poor farm referred to, the buildings thereon, and the furniture and fixtures therein, were used exclusively for charitable purposes by the City of New Brunswick, the owner thereof.

The questions considered by the Supreme Court of New Jersey were: (1) whether the 2d section of the Act approved February 18, 1862, was repealed by the general tax law of the State, approved April 11, 1866 (Revised Laws, 1150), the 5th section of which enacted that the property of the cities of the State, and all buildings used exclusively for charitable purposes, with the land whereon the same are erected, and which may be necessary for the fair enjoyment thereof, and the furniture and personal property used therein, shall be exempt from taxation; and the 32d section of which, after repealing certain Acts named, repealed all other Acts or parts of Acts, whether special or local or otherwise, inconsistent with the provisions of the Act of 1866, except one Act approved in 1864 and such special or local Acts as had been approved since 1862; (2) whether, if the Legislature had, by the Act of April 11, 1866, declared its purpose to repeal the 2d section of the Act of February 18, 1862, such purpose could be constitutionally enforced.

The supreme court held in *State* v. *Williamson*, 44 N. J. L. (15 Vroom) 165: (1) that the declaration in the general Law of 1866 that all Acts and parts of Acts, whether special or local or otherwise, inconsistent with its provisions, were repealed, abrogated the provisions in the prior special Act of 1862 for the taxation of the poor farm and the personal property thereon by the Township of North Brunswick, because such provision in the Act of 1862 was inconsistent with the provision in the Act of 1866 exempting from taxation all property of the cities of the State and all property used exclusively for charitable purposes; (2) that the Legislature could constitutionally repeal the power of taxing the poor farm and the per- [196 sonal property thereon, given by the Act of 1862 to the Township of North Brunswick. The court decided that the provisions of the two statutes could not stand together, and that it was impossible to give full effect to the language of the repealing provision of the Act of 1866 and keep in operation the second section of the Act of 1862. It also decided that the provision of the second section of the Act of 1862 did not become, by reason of the subsequent conveyance of March 27, 1862, to the corporation of the City of New Brunswick, a contract between that corporation and the Township of North Brunswick, the obligation of which the Legislature was forbidden to impair; that one Legislature could not confer upon a township a power of taxation which a subsequent Legislature could not revoke against the objection of the township; that the power of a Legislature over a corporation created for the purposes of local government was supreme; that no contract with such a corporation arose from the delegation to it of taxing authority, citing *Tinsman* v. *Belvidere*

*Deed from James C. Edmonds, William Dunham, Abm. L. Van Liew, Ellsworth Farmer, and James H. Webb, township committee of the Township of North Brunswick, and John Griggs, John Culver, Charles P. Blew, and Joseph H. Bloodgood, township committee of the Township of East Brunswick, to the corporation of the City of New Brunswick.

This indenture, made this 27th day of March, in the year of our Lord one thousand eight hundred and sixty-two, between James C. Edmonds, William Dunham, Abraham L. Van Liew, Ellsworth Farmer, and James H. Webb, township committee of the Township of North Brunswick, John Griggs, John Culver, Charles P. Blew, and Joseph H. Bloodgood, a majority of the township committee of the Township of East Brunswick, in the County of Middlesex and State of New Jersey, of the first part, and the corporation of the City of New Brunswick, in the State of New Jersey, of the second part, witnesseth: That the said party of the first part, for and in consideration of the sum of two thousand six hundred and eleven dollars and thirteen cents, lawful money of the United States of America, to them, the said party of the first part, in hand well and truly paid by the said party of the second part at and before the sealing and delivery of these presents, the receipt whereof is hereby acknowledged, and the said party of the first part, being fully satisfied, contented, and paid, have granted, bargained, and sold, and by these presents do grant, bargain sell, convey, and confirm, to the said party of the second part and to their successors and assigns forever, all that certain farm and tract of land and premises known as the poor farm, situate, lying, and being in the Township of North Brunswick, in the County of Middlesex and State of New Jersey, butted and bounded as follows: Beginning at the southeasterly corner of a lot of land of Thomas Van Deursen on George's road, thence running along said Van Deursen's line north seventy-one degrees and twenty-five minutes west twenty-three chains to another corner of said Van Deursen's land; thence along his land north eighteen degrees and twenty-five minutes east five chains and ten links to Mill lane; thence along Mill lane north seventy-one degrees and thirty minutes west ten chains and fifteen links; thence still along Mill lane north sixty-two degrees thirty minutes west two chains and sixty links to a corner of land formerly of David Freeman; thence along the line of said land south forty-four degrees twenty-five minutes west thirty chains and twenty-five links; thence south sixty-two degrees and five minutes east thirty-one chains and fifty links to a corner of Belcher's land; thence north forty-four degrees and thirty minutes east ninety-six links to another corner of Belcher's land; thence south along the line of Belcher's land forty-three degrees and thirty minutes east thirty chains to George's road; thence along said road north twenty-six degrees fifteen minutes east three chains and eighty-five links; thence still along said road north three degrees thirty minutes east nine chains; thence still along said road north five degrees east seven chains and sixty-five links; thence still along said road north two degrees thirty minutes west six chains; thence still along said road north fifteen degrees thirty minutes west seven chains thirty-five links; thence still along said road north sixteen degrees east two chains and eight links; thence still along said road north thirty degrees forty-five minutes east six chains and eight links, to the place of beginning; containing one hundred and forty-one acres.

The above described farm and premises are conveyed by the parties of the first part aforesaid by virtue of the power and authority in them vested by the Act of the Legislature of the State of New Jersey entitled "An Act to Authorize the Township Committees of the Township of North Brunswick and East Brunswick, in the County of Middlesex, to Convey to the Corporation of the City of New Brunswick, the Poor Farm in the Town-

Del. R. Co. (2 Dutcher) 26 N. J. L. 148; *Mayor* v. *Jersey City & B. R. Co.* (5 C. E. Green) 20 N. J. Eq. 360, and *Rader* v. *Southeasterly Road Dist.* (7 Vroom) 36 N. J. L. 273, and that the power of taxation was not in any sense the private property of the municipality, but was peculiarly a public and governmental power, and must, as such, be at all times susceptible of repeal or modification, according to legislative discretion, so far as the mere right of the township to exercise it was concerned.

The judgment of the supreme court was that the assessment of taxes should be set aside. The collector of the township removed the case, by a writ of error, to the court of errors and appeals of the State, which affirmed the judgment, in an opinion (*Williamson* v. *State* 46 N. J. L. 17 Vroom. 204) adopting the reasons given by the supreme court. The case having been remitted to the supreme court, the collector has brought it here by a writ of error to that court.

On the question as to the effect of the Act of 1866, in repealing the 2d section of the Act of 1862, we concur with the highest court of New Jersey, that the provisions of the two statutes cannot stand together, and that it is impossible to give full effect to the language of the repealing provision of the Act of 1866, and keep in operation the 2d section of the Act of 1862. We must therefore hold, as the state court held, that the 2d section of the Act of 1862 was repealed by the Act of 1866. This leaves open only the consideration of the question as to whether the 2d section of the Act of 1862 created a contract, the obligation of which could not be constitutionally impaired by the repeal of such 2d section.

[197]

It is contended for the collector, that the tax provided for by the 2d section of the Act of 1862 is in the nature of a ground rent, and of a right reserved by the Township of North Brunswick, out of the land conveyed by the deed of March, 1862; that the fee of the poor farm belonged to the township in its private and proprietary character; that the farm had been acquired by the taxation of the inhabitants of the township; that the Legislature could not deprive them of it without their consent; that the township was authorized by the Legislature to convey the farm to the corporation of the City of New Brunswick for the consideration, in part, of the right of the Township of North Brunswick to tax it so long as it should be embraced in the limits of that township; that, in taking the title, the City of New Brunswick agreed to pay to that township an annual sum to be determined in amount by the annual tax rate of that township, so long as the farm should remain under, and receive the benefit of, the municipal government of that township; that the right thus reserved, of levying and collecting such tax, became thereby vested in that township, and the amount of tax, when determined, became its private property; and that the case involves the question of the authority of the Legislature over the private property and vested rights of the township, and not the question of its authority over the public and governmental powers of the township.

We concur in the views of the Court of Er-

---

ship of North Brunswick, Together With all the Personal Property on said Farm," passed 18th February, A. D. 1862, a copy of which is hereto annexed and taken as part of this deed:

"An Act to authorize the township committees of the Township of North Brunswick and East Brunswick, in the County of Middlesex, to convey to the corporation of the City of New Brunswick the poor farm in the Township of North Brunswick, together with all the personal property on said farm.

"Whereas, by an Act of the Legislature, passed February twenty-eight, Anno Domini one thousand eight hundred and sixty, the then Township of North Brunswick was divided into the Townships of North Brunswick, East Brunswick, and New Brunswick, and the town committees of said townships were authorized and required to divide the real and personal property of the Township of North Brunswick between the new Townships of North Brunswick, East Brunswick, and New Brunswick; and whereas the poor farm, which is situate in the limits of the present Township of North Brunswick, and which belonged to the former Township of North Brunswick, and the personal property thereon, has never been divided, but is owned and held in common by the said Townships of North Brunswick, East Brunswick and the corporation of the City of New Brunswick, which said corporation has, by an Act of the Legislature, passed March fifteenth, Anno Domini one thousand eight hundred and sixty-one, succeeded to, and become invested with, and entitled to, all the rights and property of the said Township of New Brunswick; and whereas such ownership and holding in common is found inconvenient and injurious; and whereas the said Townships of North Brunswick and East Brunswick have agreed with the corporation of the City of New Brunswick to convey and sell to the said corporation of the City of New Brunswick all their and each of their right, title, interest and estate in the said poor farm and personal property thereon, for the sum of two thousand six hundred and eleven dollars and thirteen cents, the value of the interest of those townships therein—therefore

"1. BE IT ENACTED *by the Senate and General Assembly of the State of New Jersey*, That the township committees of the Townships of North Brunswick and East Brunswick, or a majority of each of the said town committees, be and they are hereby authorized and empowered to convey all the right, title, interest and estate of the said townships in the said poor farm, and the personal property thereon, to the said corporation of the City of New Brunswick, for the sum aforesaid.

"2. *And be it enacted*, That the said poor farm and the personal property thereon shall be at all times hereafter liable and subject to taxation by the said Township of North Brunswick so long as it is embraced in the limits of the said Township of North Brunswick.

"3. *And be it enacted*, That any person sent from the corporation of the City of New Brunswick, or Township of East Brunswick, to the said poor farm, or any person born upon the said poor farm, shall not, by reason of any residence or being born on said farm, acquire a residence or settlement in the said Township of North Brunswick; the place of settlement of any person sent as aforesaid to the said poor farm, or born thereon, shall be determined in all cases without reference to their residence or being born on said poor farm.

"4. *And be it enacted*, That this Act shall take effect immediately."

Together with all and singular the buildings, improvements, rights, liberties, privileges, hereditaments, and appurtenances to the same belonging or in any wise appertaining, and the reversion and reversions, remainder and remainders, rents, issues, and profits thereof, and every part and parcel thereof; and also all the estate, right, title, interest, use, possession, property, claim, and demand whatsoever, both in law and equity, of aforesaid Townships of North Brunswick and East Brunswick, to the said premises, and to every part and parcel thereof; to have and to hold the same to the said party of the second part, their successors and assigns, to the use of the party of the second part, their successors and assigns.

In witness whereof the said parties of the first part have hereunto set their hands and seals the day and year first above written.

rors and Appeals of New Jersey on this question. It is not the same question as that involved in the principle recognized by this court, that a provision in an Act of a Legislature, exempting certain specified property from [198] taxation by the authorities of a State or a municipality, for all time or for a limited time, constitutes a contract in respect of such property, the obligation of which cannot be impaired by a subsequent Legislature, and is, therefore, a contract within the protection of the Constitution of the United States.

It is to be observed in the present case, that the Act of February 18, 1862, does not assert or recognize the fact that the privilege of taxing the poor farm in the future was a part of the consideration for the conveyance of that farm by the Township of North Brunswick. The Act recites that the Townships of North Brunswick and East Brunswick had agreed to convey and sell to the corporation of the City of New Brunswick their interest in the poor farm and the personal property thereon, for the sum of $2,611.13, "the value of the interest of those townships therein." It then empowers the two townships to convey their interest in the poor farm and the personal property thereon to the corporation of the City of New Brunswick "for the sum aforesaid." It then enacts, in the 2d section, which is a separate and independent section, "that the said poor farm and the personal property thereon shall be at all times hereafter liable and subject to taxation by the said Township of North Brunswick so long as it is embraced in the limits of the said Township of North Brunswick."

So, also, the deed of March 27, 1862, recites as its consideration the sum of $2,611.13, paid by the corporation of the City of New Brunswick to the grantors. No other consideration is expressed. The Act of February 18, 1862, is incorporated in the deed, as the authority by virtue of which the grantors convey the property.

It is not intended to suggest that, if the right of taxation had been named in the Act or in the deed as a part of the consideration for the conveyance, it would have made a different case; but reference is made to the actual provisions of the Act and the deed, solely for the purpose of showing that they evince no idea on the part of the Legislature, or of the parties to the conveyance, that the perpetual right of taxation, now asserted, formed any part of the consideration of the transaction.

[199] The true principle involved in the case is, whether the power of taxation on the part of a municipal corporation is private property, or a vested right of property, in its hands, which, when once conferred upon it by an Act of the Legislature, cannot be subsequently modified or repealed. Even without the special provision of the 2d section of the Act of February 18, 1862, it is to be presumed that the poor farm and the personal property thereon would, while situated in the Township of North Brunswick, be subject to taxation by that township, unless exempted from such taxation on the ground of a charitable use. The special question in this case arises, therefore, solely out of the use of the words in the 2d section, "at all times hereafter." The provision of the 2d section, and the contention here made on the part of the collector, necessarily imply the authority of the Legislature to confer the power of taxation upon the township, and the nonexistence of such power unless conferred by the Legislature. The question arising is, therefore, whether the Legislature which passed the Act of February 18, 1862, could lawfully so grant the power of taxation to the township in perpetuity, that a subsequent Legislature could not repeal or modify such grant of power.

We are clearly of opinion that such a grant of the power of taxation, by the Legislature of a State, does not form such a contract between the State and the township as is within the protection of the provision of the Constitution of the United States which forbids the passage by a State of a law impairing the obligation of contracts. The conferring of such right of taxation is an exercise by the Legislature of a public and governmental power. It is the imparting to the township of a portion of the power belonging to the State, which it can lawfully impart to a subordinate municipal corporation. But, from the very character of the power, it cannot be imparted in perpetuity, and is always subject to revocation, modification, and control by the legislative authority of the State. The authorities to this effect are uniform. 1 Dill. Mun. Corp. 3d ed. §§ 61, 63, and cases there cited; Cooley, Const. Lim. 3d ed. *192, *193, *237, and cases there cited; *East Hartford* v. *Hartford Bridge Co.* 51 U. S. 10 How. 511, 534 [13: 518, 528]; *State Bank* v. [200] *Knoop*, 57 U. S. 16 How. 369, 380 [14: 977, 981]; *United States* v. *Baltimore & O. R. Co.* 84 U. S. 17 Wall. 322, 329 [21: 597, 600]; *Philadelphia* v. *Fox*, 64 Pa. 169; *Jersey City* v. *Jersey City & B. R. Co.* 20 N. J. Eq. (5 C. E. Green), 360; *Police Jury* v. *Shreveport*, 5 La. Ann. 661, 665; *State* v. *St. Louis Co. Court*, 34 Mo. 546, 552; *People* v. *Morris*, 13 Wend. 325, 331; *Warner* v. *Beers*, 23 Wend. 103, 126; *Richmond* v. *Richmond & D. R. Co.* 21 Gratt. 604, 613; *Richland County* v. *Lawrence County*, 12 Ill. 8; *Trustees of Schools* v. *Tatman*, 13 Ill. 27, 30; *Gutzweller* v. *People*, 14 Ill. 142; *Sangamon County* v. *Springfield*, 63 Ill. 66, 71.

In the present case, the 2d section of the Act of February 18, 1862, has no more force than if the words "at all times hereafter" had been omitted; and the section is to be construed as if it only temporarily conferred the right of taxation on the township, subject to be recalled at the pleasure of the Legislature. There is no element of private property in the right of taxation conferred upon a municipal corporation. Property acquired by paying for it with money raised by taxation is property. The legislation in question does not affect or interfere with any such property. The poor farm and the personal property thereon are not the property of the Township of North Brunswick, but are the property of the corporation of the City of New Brunswick. Nor is there anything violative of any provision of the Constitution of the United States in the enactment of the Legislature of New Jersey, that the property in question shall be exempt from taxation because it is used exclusively for charitable purposes. The long recognized and universally prevalent policy of making such exemption is a warrant

for saying that the 2d section of the Act of February 18, 1862, is fairly to be regarded as containing an implied reservation that such exemption might be thereafter made, as being the exercise of a public and governmental power, resting wholly in the discretion of the Legislature and not the subject of contract.

Judgment affirmed.

---

[232] LIZZIE BUXTON ET AL., *Plfs. in Err.*,
v.
HATTIE L. TRAVER ET AL.

(See S. C. Reporter's ed. 232-237.)

Right of preemption—occupation of land—rights of heirs.

1. A person cannot acquire, by his occupation only of unsurveyed lands of the United States, a right of preemption to them under the laws of the United States.
2. Where nothing was done by an occupant of public land, beyond his occupancy, and his death occurred two years before the surveys were made, the privilege of purchasing the land was not acquired by him so as to be available to his heirs.
3. Section 2269 of the Revised Statutes does not give to heirs of a deceased occupant of unsurveyed public land, who during his life did nothing beyond its occupation and improvement, the same rights which are conferred upon heirs of a person entitled at the time of his death to the benefit of the preemption laws.

[No. 211.]

Submitted March 18, 1889. Decided April 1, 1889.

IN ERROR to the Supreme Court of the State of California, to review a judgment of the Supreme Court of the State, affirming a judgment of one of the Superior Courts of the State dismissing a suit to charge defendant as trustee for plaintiffs of an undivided half interest in certain lands. *Affirmed.*

The facts are stated in the opinion.

Messrs. **William Craig** and **Douglas Dyrenforth** for plaintiffs in error.

Messrs. **A. L. Rhodes, A. T. Britton, A. B. Browne,** and **W. J. Curtis,** for defendants in error:

Before a person will be permitted to call in question the proceedings through which another has obtained a patent for public lands, he must show in himself all the conditions necessary to entitle him to preempt.

Burrell v. *Haw*, 40 Cal. 377; *Page* v. *Hobbs*, 27 Cal. 483; *People* v. *Jackson*, 24 Cal. 630; *Megerle* v. *Ashe*, 33 Cal. 74.

[233] *Mr. Justice* **Field** delivered the opinion of the court:

This was a suit to charge the defendant Hattie L. Traver as trustee for the plaintiffs, of an undivided half interest in certain lands in San Bernardino County, California, and was commenced in one of the superior courts of the State. To the complaint the defendants demurred; the demurrer was sustained, and judgment entered that the suit be dismissed. On appeal to the supreme court of the State the judgment was affirmed; and the case is brought to this court on writ of error.

The complaint alleges that on the 2d of Feburary, 1870, one Oscar Traver settled upon a quarter section of land in township two in San Bernardino County, California, and that until his death he lived upon, improved and cultivated the land; that, at the time of his settlement and continuously until the 1st day of July, 1879, it was public property of the United States, and was unoccupied and unsurveyed and subject to the right of preemption; that no approved plat of the township was received at the United States District Land Office at Los Angeles, which embraced the land in controversy, until July 1st, 1879; that at the time of his settlement, and thereafter until his death, which occured January 2d, 1877, he was a citizen of the United States, and entitled to the benefit of the preemption and homestead laws; that he settled upon, improved the land and erected a building thereon, intending to acquire a title thereto from the United States as soon as he possibly could; that at the time of his settlement he was a single person and remained so until the 13th of December, 1870, when he intermarried with the defendant, Hattie L. Traver; that on his death he left surviving him his widow and two daughters, Lizzie and Annie, and the three were his only heirs at law; [234] that the daughters have since married and are the plaintiffs in this suit; that the deceased died intestate; and that no administrator of his estate has been appointed.

The complaint further alleges that on the 16th of July, 1878 the defendant Hattie L. Traver filed in the United States District Land Office at Los Angeles, a preemption declaratory statement describing the land, alleging settlement on the 2d of February, 1870, and stating her intention to claim the same under the preemption laws of the United States; that soon after the death of Oscar Traver she wrote to the plaintiffs at San Francisco, informing them of the death of their father, and representing that he had not left any property; that this representation was made with intent to deceive them and prevent them from filing the necessary papers to complete his preemption and homestead rights; that in December, 1883, they discovered for the first time that she had completed those rights and obtained the patent; that she had lived upon the land and received to her own use its rents and profits since his death, which are stated upon information and belief to be $2,500; that the land is of the value of one thousand dollars per acre; that the other defendants named claim to have some interest in the land by purchase from her; that such purchase was made with notice of the plaintiffs' rights; and that she denies that they have any rights in the lands, or in the rents, issues, and profits thereof. The prayer of the complaint is that the defendant Hattie L. Traver may be charged, as trustee for plaintiffs of an undivided half interest in the lands, and in the rents, issues, and profits thereof, and account for and pay over to them such interest in the rents, issues, and profits; that the other defendants be adjudged to have no interest in the land or in any part thereof; and that the plaintiffs may have such other and further relief as to the court may appear to be just.

The entire claim and contention of the plaintiffs rest upon two grounds: 1st, that the deceased acquired by his occupation of unsurveyed

lands of the United States a right of preemption to them under the laws of the United States; and, 2d, that the plaintiffs, as heirs at law of [235] the deceased, were equally entitled, with his widow, under section 2269 of the Revised Statutes, to the benefit of the patent obtained by her. That section is as follows:

"Where a party entitled to claim the benefits of the preemption laws dies before consummating his claim, by filing in due time all the papers essential to the establishment of the same, it shall be competent for the executor or administrator of the estate of such party, or one of the heirs, to file the necessary papers to complete the same; but the entry in such cases shall be made in favor of the heirs of the deceased preemptor, and a patent thereon shall cause the title to inure to such heirs, as if their names had been specially mentioned."

Neither of these grounds is well taken. No portion of the public domain, unless it be in special cases not affecting the general rule, is open to sale until it has been surveyed and an approved plat of the township embracing the land has been returned to the local land office. A settlement upon the public lands in advance of the public surveys is allowed to parties who in good faith intend, when the surveys are made and returned to the local land office, to apply for their purchase. If, within a specified time after the surveys, and the return of the township plat, the settler takes certain steps, that is, files a declaratory statement, such as is required when the surveys have preceded settlement, and performs certain other acts prescribed by law, he acquires for the first time a right of preemption to the land, that is, a right to purchase it in preference to others. Until then he has no estate in the land which he can devise by will, or which, in case of his death, will pass to his heirs at law. He has been permitted by the government to occupy a certain portion of the public lands and therefore is not a trespasser, on his statement that when the property is open to sale he intends to take the steps prescribed by law to purchase it; in which case he is to have the preference over others in purchasing, that is, the right to preempt it. The United States make no promise to sell him the land, nor do they enter into any contract with him upon the subject. They simply say to him—if you wish to settle upon a portion of the public lands, and purchase the title, you [236] can occupy any unsurveyed lands which are vacant and have not been reserved from sale; and when the public surveys are made and returned, the land not having been in the mean time withdrawn from sale, you can acquire, by pursuing certain steps, the right to purchase them. If those steps are, from any cause, not taken, the proffer of the government has not been accepted, and a title in the occupant is not even initiated. The title to the land remains unaffected, and subject to the control and disposition of the government, as before his occupancy. This doctrine has been long established in this court. Thus in *Frisbie* v. *Whitney*, 76 U. S. 9 Wall. 187, 193 [19: 668, 670], where the subject was fully considered, it was held that occupation and improvement on the public lands, with a view to preemption, did not confer a vested right in the land so occupied. Speaking of the settlement in that case, the court, by *Mr. Justice* Miller, said: "So far as anything done by him is to be considered, his claim rests solely upon his going upon the land and building and residing on it. There is nothing in the essential nature of these acts to confer a vested right, or, indeed, any kind of claim to land, and it is necessary to resort to the preemption laws to make out any shadow of such right." The same doctrine was affirmed in *The Yosemite Valley Case*, 82 U. S. 15 Wall. 77 [21: 82], the court observing that until all the preliminary steps to the acquisition of the title of the United States prescribed by law have been complied with, the settler has not acquired any title against the United States. Among these are the entry of the land at the appropriate land office and the payment of its price. "Until such payment and entry," the court added, "the Acts of Congress give to the settler only a privilege of preemption in case the lands are offered for sale in the usual manner; that is, the privilege to purchase them in that event, in preference to others. The United States by those Acts enter into no contract with the settler, and incur no obligation to any one that the land occupied by him shall ever be put up for sale. They simply declare that in case any of their lands are thrown open for sale the privilege to purchase them in limited quantities, at fixed prices, shall be first given to parties who have settled upon and improved them." Nothing was done in this case by the deceased [237] occupant beyond his occupancy, and therefore nothing to initiate a title in him; not even the privilege of purchasing the land was acquired by him. His death occurred two years before the surveys were made and returned.

Section 2269 of the Revised Statutes, upon which the plaintiffs rely, has no application to the case presented by them. That section was taken from section two of the Act of March 3d, 1843 (5 Stat. at L. 620), "to authorize the investigation of alleged frauds under the preemption laws, and for other purposes." At that time no settlement on unsurveyed lands was permitted by the laws of the United States and the second section was intended to secure to the heirs of the deceased preemptor a claim to the benefit of the preemption laws, which he had initiated, but not completed before his death, "by filing in due time all the papers essential to the establishment of the same." His executor or administrator, or one of his heirs, was in that event allowed to file such papers. No claim of the deceased in this case was lost by any failure to file the necessary papers. The time for any papers to be filed did not arrive during his life.

The contention of the plaintiffs in error is, that the section, upon a correct construction, extends to heirs of a deceased occupant of unsurveyed public land of the United States, who during his life did nothing beyond its occupation and improvement, the same rights which are conferred upon heirs of a person entitled at the time of his death to the benefits of the preemption laws. It is upon the supposed denial of such rights to the plaintiffs by the court below that the jurisdiction of this court is invoked; it is upon that denial alone that the jurisdiction can be maintained. What we have said as to the legal effect of the de-

ceased's occupation and improvement shows that no title was initiated or right of preemption created by them; and of course nothing was left by the deceased to be completed by his heirs, and hence there was no denial of any rights to them under the statute, as claimed.

Judgment affirmed.

---

[227] DISTRICT OF COLUMBIA, *Plff. in Errr.*,
v.
LAWRENCE E. GANNON.

(See S. C. Reporter's ed. 227-229.)

Jurisdiction over judgments of District of Columbia — interest — jurisdictional amount — federal question.

1. In cases brought here on writ of error for the re-examination of judgments of affirmance in the Supreme Court of the District of Columbia for the purpose of determining the jurisdiction of this court, the value of the matter in dispute is determined by the judgment affirmed without adding interest or costs.

2. Where interest is part of the claim litigated, and the judgment provides for interest to run from a period antecedent to the rendition of the judgment, or, in actions *ex contractu*, according to the terms of the contract upon which the action is based, the interest may be added for the purpose of determining the jurisdiction of this court.

3. In an action for personal injuries if, by the judgment of affirmance in the Supreme Court of the District, interest is directed to be added to the judgment at special term, the interest will be part of the jurisdictional amount; but where, in such action, the judgment is affirmed in general term with costs but not with interest, interest will not be added to the judgment for the purpose of giving this court jurisdiction.

4. Where the instructions refused by the trial court involved the Acts of Congress creating the District Government only as bearing upon the question of the liability of the District for negligence in failing to keep the streets in repair and by way of construction, and the validity of the Acts themselves or of the authority exercised under them was not denied, the jurisdiction of this court cannot be maintained on the ground that the validity of the authority conferred by Congress upon the District Commissioners is drawn in question.

[No. 182.]

Argued March 5, 6, 1889. Decided April 1, 1889.

IN ERROR to the Supreme Court of the District of Columbia, to review a judgment of that Court affirming in General Term a judgment rendered at Special Term for $5,000 and costs, in an action for personal injuries. *Dismissed.*

The facts are stated in the opinion.

Messrs. **A. G. Riddle** and **Henry E. Davis** for plaintiff in error.

Messrs. **S. S. Henkle** and *J. F. Ennis*, for defendant in error:

Interest upon the judgment below cannot be computed in making up the amount in dispute necessary to give jurisdiction in error or upon appeal.

Zeckendorf v. *Johnson*, 123 U. S. 617 (31:277); *The Patapsco*, 79 U. S. 12 Wall. 451 (20:457); *New York Elevated R. Co.* v. *Fifth Nat. Bank*, 118 U. S. 608 (30:259); *Knapp* v. *Banks*, 43 U. S. 2 How. 73 (11:184); *Western U. Teleg. Co.* v. *Rogers*, 93 U. S. 566 (23: 978); *Walker* v. *U. S.* 71 U. S. 4 Wall. 164 (18:819).

Interest is not part of the judgment itself.

Bank of U. S. v. *Daniel*, 37 U. S. 12 Pet. 32 (9:989); *Baltimore & P. R. Co.* v. *Trook*. 100 U. S. 112 (25:571).

The validity of an authority exercised under the United States is not questioned.

Millingar v. *Hartupee*, 73 U. S. 6 Wall. 258 (18:329); *Re Craft*, 124 U. S. 370 (31:449); *Tarver* v. *Keach*, 82 U. S. 15 Wall. 68 (21:82); *Delmas* v. *Merchants Mut. Ins. Co.* 81 U. S. 14 Wall. 661 (20:757); *Bank of the Old Dominion* v. *McVeigh*, 98 U. S. 332 (25:110): *New York L. Ins. Co.* v. *Hendren*, 92 U. S. 286 (23:709); *Bethell* v. *Demaret*, 77 U. S. 10 Wall. 537 (19: 1007); *Rockhold* v. *Rockhold*, 92 U. S. 129 (23: 507).

Mr. Chief Justice **Fuller** delivered the opinion of the court:

The defendant in error recovered judgment in the Supreme Court of the District of Columbia, against the District, for five thousand dollars, in an action on the case for personal injuries on the 17th day of January, 1885, which judgment was affirmed in general term on the 28th of May succeeding, and the cause brought here on writ of error.

Under the Act of Congress of March 3, 1885, (23 Stat. at L. 443), no appeal or writ of error can be allowed from any judgment or decree in any suit at law or in equity in the Supreme Court of the District of Columbia, unless the [228] matter in dispute exclusive of costs shall exceed the sum of five thousand dollars, or unless the validity of a patent or copyright is involved in the suit, or the validity of a treaty or statute of, or an authority exercised under, the United States, is drawn in question therein.

The judgment in the case at bar, as rendered at special term, was for five thousand dollars and costs; and this was affirmed with costs, but not with interest, the general term thereby simply declaring that it was satisfied to let the former judgment stand. In all particulars material to the inquiry as to the value of the matter in dispute, the record is the same as in *Baltimore & P. R. Co.* v. *Trook*, 100 U. S. 112 [25:571] where this court, speaking by *Mr. Chief Justice* Waite, said: "In cases brought here on writ of error for the re-examination of judgments of affirmance in the Supreme Court of the District of Columbia, the value of the matter in dispute is determined by the judgment affirmed, without adding interest or costs."

The general rule has been repeatedly so laid down. *Western U. Teleg. Co.* v. *Rogers*, 93 U. S. 565 [23:977]; *Walker* v. *United States*, 71 U. S. 4 Wall. 163, 165 [18:319]; *Knapp* v. *Banks*, 43 U. S. 2 How. 73 [11:184]; *New York Elevated R. Co.* v. *Fifth Nat. Bank*, 118 U. S. 608 [30:259].

Where interest, instead of accompanying the judgment or decree as damages for the detention of a specific amount adjudged or decreed, is part of the claim litigated, and the judgment or decree is so framed as to provide for it to run from a period antecedent to the rendition of such judgment or decree, or, in actions *ex contractu*, according to the terms of the contract upon which the action is based, jurisdiction may attach. *Zeckendorf* v. *Johnson*, 123 U. S. 617 [31:277]; *The Patapsco*, 79 U. S. 12 Wall. 451 [20:457]; *The Rio Grande*, 86 U. S. 19 Wall. 178 [22:60].

This result would have followed here, if, by the judgment of affirmance, interest had been directed to be added to the judgment at special term. As it is, however, the judgment falls below the amount necessary to give us jurisdiction.

Upon the trial the following, among other, instructions were asked for the defendant and refused:

[229] "The present government of the District of Columbia having been imposed upon the people of the District without any power or opportunity on the part of said people to accept or reject the same, the District cannot be held responsible for the negligence of said government."

"The District of Columbia, under the form of government existing at the time of the accident which is the subject matter of this suit is not liable for damages resulting from said accident."

"If the care of the streets of the City of Washington, as a public duty is imposed by the Statutes upon the District of Columbia, the performance of which is for the general benefit, and the District derives no profit from it, then no action can be maintained against the District for damages resulting from a neglect to perform such public duty."

"The present form of government of the District of Columbia, consisting, as it does, of officers who are all appointed and paid by the United States, without any power to levy taxes or expend money except as directed by Congress, is not of such a character as to make the District responsible in damages for any negligence of those officers."

It is contended on behalf of the plaintiff in error that the validity of the authority conferred upon the District Commissioners by Congress is drawn in question in this suit.

We do not agree with counsel in this view. The instructions above quoted involved the Acts of Congress creating the District Government only as bearing upon the question of the liability of the District for negligence in failing to keep the streets in repair, and by way of construction, and the validity of the Acts themselves or of the authority exercised under them, was not denied. The case of *Baltimore & P. R. Co.* v. *Hopkins*, *ante*, 908, is decisive that jurisdiction cannot be maintained on this ground under such circumstances.

The writ of error will therefore be dismissed.

THE DISTRICT OF COLUMBIA, Plaintiff in Error, *v.* CLINTON H. EMERSON, No. 183.

In error to the District of Columbia.

[230] *Mr. Chief Justice* **Fuller** remarked that the same questions were presented upon the record in this case as in the *District of Columbia, Plaintiff in Error* v. *Lawrence E. Gannon*, No. 182, just decided, and that for the reasons there given the *writ of error must be dismissed.*

---

[201] CATHERINE A. METCALFE ET AL., *Appts.*,

v.

THE STEAMSHIP ALASKA, ETC., ET AL.

(See S. C. Reporter's ed. "*The Alaska*," 201-209.)

Jurisdiction as to amount—motion to dismiss or affirm—actions for death—when may be brought.

1. Where the suit is a libel *in rem*, and the stipulation given to release the vessel is for the sum of $25,000, for the benefit of five parties, each of whose claim for damages is $10,000, some of whom might recover more than $5,000, the amount involved in each case, on the question of jurisdiction, is $10,000, which is sufficient to give this court jurisdiction as to amount.

2. There must be color for the motion to dismiss, to warrant this court in entertaining a motion to affirm.

3. The statute of New York on the subject of actions for death by negligence, does not apply to a case where the death did not occur within the State of New York, nor in waters subject to its jurisdiction.

4. The Admiralty Courts of the United States cannot take cognizance of a suit to recover damages for the death of a human being on the high seas or on waters navigable from the sea, caused by negligence, in the absence of an Act of Congress or a statute of a State, giving a right of action therefor.

[No. 1217.]

Submitted March 11, 1889. Decided April 1, 1889.

APPEAL from a decree of the Circuit Court of the United States for the Southern District of New York, in a libel *in rem* in admiralty, awarding to the libelants certain damages for the loss of the pilot boat "Columbia," and of personal effects, and dismissing the libel in respect to the damages claimed for the loss of lives.

On motion to dismiss the appeal, united with a motion to affirm the decree. *Motion to dismiss denied, and decree affirmed.*

See S. C. *sub nom. Van Pelt* v. *The Alaska*, 33 Fed. Rep. 107.

The facts are stated in the opinion.

Mr. **Geo. Bethune Adams**, for appellees, in support of motion to dismiss:

The sum in dispute in each case is not sufficient to give jurisdiction to this court.

The jurisdictional amount cannot be affected by the joinder of the parties in one action.

Oliver v. *Alexander*, 31 U. S. 6 Pet. 143 (8: 849); *Gruner* v. *U. S.* 52 U. S. 11 How. 163 (13: 647); *Rich* v. *Lambert*, 53 U. S. 12 How. 347 (13: 1017); *Rogers* v. *The "St. Charles,"* 60 U. S. 19 How. 108 (15: 563); *Sampson* v. *Welsh*, 65 U. S. 24 How. 207 (16: 632); *Seaver* v. *Bigelow*, 72 U. S. 5 Wall. 208 (18: 595); *N. O. Nat. Bkg. Asso.* v. *N. O. Mut. Ins. Asso.* 102 U. S. 121 (26: 45); *Chatfield* v. *Boyle*, 105 U. S. 231 (26: 944); *Elgin* v. *Marshall*, 106 U. S. 578 (27: 249); *Ex parte Balt. & O. R. Co.* 106 U. S. 5 (27: 78); *Stewart* v. *Dunham*, 115 U. S. 61 (29: 329).

The instant this stipulation was given and substituted for the steamer, the question of amounts severally recoverable was finally determined.

Roberts v. *The Huntsville*, 3 Woods, 387; *The White Squall*, 4 Blatchf. 103; *The Thales*, 3 Ben. 327; *S. C.* 10 Blatchf. 203; *The Nahor*, 9 Fed. Rep. 213.

No liability can be incurred in proceedings *in rem* beyond the amount of the stipulation given for the release of the vessel.

Henry, Adm. Juris. & Pro. 344; *The Webb*, 81 U. S. 14 Wall. 406 (20: 774); *The Ann Caroline*, 69 U. S. 2 Wall. 538 (17: 833); *The Wanata*, 95 U. S. 600 (24: 461).

After the release of steamer the amendments,

increasing claims severally to $10,000, could have no effect.

Lee v. *Watson*, 68 U. S. 1 Wall. 337 (17: 557).

The burden of showing jurisdiction is upon appellants.

Hagan v. *Foison*, 35 U. S. 10 Pet. 160 (9: 381); *The Jesse Williamson, Jr.* 108 U. S. 305 (27: 730).

Damages must exceed $5,000 to give jurisdiction.

Walker v. *U. S.* 71 U. S. 4 Wall. 163 (18: 319).

Interest cannot be added.

Hemmenway v. *Fisher*, 61 U. S. 20 How. 255 (15: 799); *Lincoln* v. *Claflin*, 74 U. S. 7 Wall. 132 (19: 106); *Redfield* v. *Ystalyfera Iron Co.* 110 U. S. 174 (28: 109); Supreme Court Rules, No. 23, par. 4; *Udall* v. *The Ohio*, 58 U. S. 17 How. 17 (15: 42).

Where a want of jurisdiction is patent, the court will dismiss.

Semple v. *Hagar*, 71 U. S. 4 Wall. 431 (18: 402); *Clark* v. *Hancock*, 94 U. S. 493 (24: 146).

This case is similar to *The Harrisburg*, 119 U. S. 199 (30: 358).

It is not the practice to retain such plain cases for argument.

Hinckley v. *Morton*, 103 U. S. 764 (26: 458); *Micas* v. *Williams*, 104 U. S. 556 (26: 842); *The S. C. Tryon*, 105 U. S. 267 (26: 1026).

Mr. **James Parker**, for appellants, in opposition:

A motion to affirm cannot be entertained, unless there is color of right to a dismissal.

Whitney v. *Cook*, 99 U. S. 607 (25: 446); *Hinckley* v. *Morton*, 103 U. S. 764 (26: 458); *Micas* v. *Williams*, 104 U. S. 556 (26: 842); *Independent School Dist.* v. *Hall*, 106 U. S. 428 (27: 237); *Davies* v. *U. S.* 113 U. S. 687 (28: 1149).

This court has, from time to time, changed its own decisions and enlarged the admiralty jurisdiction ["*The Genesee Chief*," 53 U. S. 12 How. 443 (13: 1058), overruled "*The Thomas Jefferson*, 23 U. S. 10 Wheat. 428 (6: 358); *Peyroux* v. *Howard* (The Planter), 32 U. S. 7 Pet. 324 (8: 700); *Hobart* v. *Drogan*, 35 U. S. 10 Pet. 108 (9: 363); "*The Orleans*" v. *Phœbus*, 36 U. S. 11 Pet. 175 (9: 677); *Waring* v. *Clarke*, 46 U. S. 5 How. 441 (12: 226)], and held that admiralty jurisdiction was not confined to waters within the ebb and flow of the tide.

See Benedict's Admiralty, §§ 74, 111; *Ex parte Gordon*, 104 U. S. 515 (26: 814); *The Magnolia*, 61 U. S. 20 How. 296, 307 (15: 909).

In other matters this court has reversed its rule of jurisdiction; *The Dred Scott doctrines; The Legal Tender Cases; Osborne* v. *Mobile*, 83 U. S. 16 Wall. 479 (21: 470), reversed in *W. U. Tel. Co.* v. *Texas*, 105 U. S. 460 (26: 1067), are instances; there are others.

Since "*The Harrisburgh*," 119 U. S. 199 (30: 358), was decided, *Judge* Benedict held, in "*The Cephalonia*," 29 Fed. Rep. 332, affirmed in 32 Fed. Rep. 112, that damages for loss of life may be recovered in admiralty.

Mr. Justice **Blatchford** delivered the opinion of the court:

This is a motion to dismiss the appeal in this case, and united with it is a motion, under subdivision 5 of Rule 6, to affirm the decree below, on the ground that, although the record may show that this court has jurisdiction, it is manifest the appeal was taken for delay only, or [202] that the question on which the jurisdiction depends is so frivolous as not to need further argument.

The suit is a libel *in rem*, in admiralty, filed in the District Court of the United States for the Southern District of New York, by the owners of the pilot boat Columbia, against the British steamship Alaska, to recover damages for the loss of The Columbia by a collision with The Alaska, on the 2d of December, 1883, on the high seas near the coast of Long Island, New York. The libel also embraced a claim for the loss of property and personal effects by some of the libelants. There was claimed for the loss of the pilot boat, $16,000, and for the loss of the other property, $2,100. It was alleged that the collision occurred solely through the negligence of the persons in charge of The Alaska. All the persons on board of the pilot boat were drowned. Among them were four pilots and a cook. One of the four pilots was a part owner of The Columbia.

William Pearce, of Glasgow, Scotland, filed a claim to The Alaska, after her attachment, and also gave a stipulation for value, in the sum of $20,000, to secure the release of The Alaska from the claims for the loss of The Columbia and of the personal effects. A supplemental libel was filed by the widows of the four pilots and of the cook who were drowned, and in it four of them on behalf of themselves and infant children severally, and the other one on her own behalf, claimed in each of the five instances damages in the sum of $5,000, for the loss severally of the lives of the persons so drowned. After the filing of the supplemental libel, Pearce gave a further stipulation for value, in the sum of $25,000, to secure the release of The Alaska from the claims for the loss of the five lives. The latter stipulation was in the following terms:

"Whereas, a supplemental libel was filed on the 22d day of November, in the year of our Lord one thousand eight hundred and eighty-four, by Catherine A. Metcalfe, Mary E. Noble, Agnes Arnold, Mary Wolf, and Bella Forblade against the British steamship Alaska, her engines, etc., for the reasons and causes in the said libel mentioned; and whereas, the said steamship Alaska, her engines, in the original action brought against said vessel by Augustus Van Pelt and others, was in the custody of the marshal under the process issued in pursuance of the prayer of the said libel; and whereas, a claim to said vessel has been filed by William Pearce, and the value thereof has been fixed by consent at twenty-five thousand dollars for the purposes of this action, as appears from said consent now on file in said court; and the parties hereto hereby consenting and agreeing, that in case of default or contumacy on the part of claimant, or his surety, execution for the above amount may issue against their goods, chattels, and lands: [203]

"Now, therefore, the condition of the stipulation is such, that if the stipulators undersigned shall at any time, upon the interlocutory or final order or decree of the said district court or of any appellate court to which the above named suit may proceed, and upon notice of such order or decree to Wilcox, Adams & Macklin, Esquires, proctors for the claimant of said steamship Alaska, her engines, etc.,

abide by and pay the money awarded by the final decree rendered by this court or appellate court, if any appeal intervene, then this stipulation to be void; otherwise to remain in full force and virtue."

Pearce put in exceptions and an answer to the libel and the supplemental libel, denying the liability. The district court, on a hearing on pleadings and proofs, entered an interlocutory decree, adjudging that the collision was caused by the mutual fault of The Alaska and The Columbia, and referring it to a commissioner to ascertain the damages. 27 Fed. Rep. 704. The commissioner made his report, which was excepted to by both parties, and a decree was made by the district court awarding to the libelants certain sums as damages for the loss of The Columbia and of personal effects, and dismissing the supplemental libel in respect of the damages claimed for the loss of lives.

Both parties appealed to the circuit court, the claimant on the ground that the libelants were not entitled to any damages, or, if to any, that the damages allowed were excessive; the libelants on the ground that they were entitled [204] to full damages, instead of only half damages, and that the value of The Columbia had been allowed at too small a sum; and the libelants in the supplemental libel on the ground that they were entitled to full damages. Before these appeals were perfected, it was consented by the parties that the supplemental libel might be amended so that the claim for the loss of life should be $10,000 in each of the five cases, instead of $5,000.

The circuit court (38 Fed. Rep. 107) made a like decree with that of the district court, finding that both vessels were in fault for the collision, and dividing the damages and the costs of both courts between the respective parties; and dismissing the supplemental libel for the loss of the lives, without costs of either court to either party.

The sums awarded by the decree of the circuit court were paid, and the libelants in the supplemental libel appealed to this court. The object of the appeal is to obtain a decree here that The Alaska is liable for the loss of the five lives. The ground alleged for the motion to dismiss the appeal is, that the sum in dispute as to each of the five lives is not over the sum of $5,000, and, therefore, is not sufficient to give jurisdiction to this court. The view urged is, that the amount originally claimed by the supplemental libel for the loss of each of the five lives was $5,000; that the stipulation in the sum of $25,000, given to release The Alaska from the five claims, was $5,000 for each claim, the amount in dispute in each case being one fifth of $25,000; and that the case stands as if each of the five parties had commenced a separate suit for $5,000, and five separate stipulations had been given, each in that amount.

But, as the stipulation is a unit, and is for the sum of $25,000, and in it the stipulators agree that execution may issue for the $25,000 against their property, and the condition of the stipulation is, that the stipulators shall pay the money awarded by a final decree (not exceeding, of course, $25,000), and as the claim of damages made by each one of the five parties is, by the amendment of the libel, $10,000 instead of $5,000, it might very well be that some of the libelants would recover more than $5,000, even on an apportionment of the damages. The fund of $25,000 is a common fund for the benefit of the five parties; and, on the facts of this case, the amount involved, on the question of jurisdiction, if not the entire sum of $25,000, is, at least, the sum of $10,000 in each case. *Gibson* v. *Shufeldt*, 122 U. S. 27, 31 [30: 1083, 1085] *et seq.* and cases cited.

But there is sufficient color for the motion to dismiss, to warrant us in entertaining the motion to affirm. *Whitney* v. *Cook*, 99 U. S. 607 [25: 446]; *Hinckley* v. *Morton*, 103 U. S. 764 [26: 458]; *Micas* v. *Williams*, 104 U. S. 556 [26: 842]; *The S. C. Tryon*, 105 U. S. 267 [26: 1026]; *Independent School Dist.* v. *Hall*, 106 U. S. 428 [27: 237]; *Davies* v. *U. S.* 113 U. S. 687 [28: 1149].

On the merits, we are of opinion that this case is governed by the decision in the case of *The Harrisburg*, 119 U. S. 199 [30: 358], and [209] that this appeal was taken for delay only. In the case of *The Harrisburg*, it was held that, in the absence of an Act of Congress or of a statute of a State, giving a right of action therefor, a suit in admiralty could not be maintained in the Courts of the United States to recover damages for the death of a human being on the high seas or on waters navigable from the sea, which was caused by negligence. It is admitted by the counsel for the libelants that the statute of New York (Code of Civil Procedure, § 1902), on the subject of actions for death by negligence, does not apply to the present case, because the deaths did not occur within the State of New York, or in waters subject to its jurisdiction. It is further to be said, that that statute gives a right of action only to the executor or administrator of the deceased person, while the present suit is brought by widows; and that the statute provides only for a suit against an individual person or a corporation, and not for a proceeding *in rem*.

A distinction is sought to be drawn between the present case and that of *The Harrisburg*, on the ground that in that case the vessel was owned in Pennsylvania, while here The Alaska is a British vessel; and that in that case the wrongful killing occurred in the waters of the State of Massachusetts, while here it occurred on the high seas. But we see no sound distinction between the two cases. In the case of *The Harrisburg*, the alleged negligence which resulted in the death occurred in a sound of the sea, embraced between the coast of Massachusetts and the islands of Martha's Vineyard and Nantucket, parts of the State of Massachusetts. The question involved and decided in that case was, whether the Admiralty Courts of the United States could take cognizance of a suit to recover damages for the death of a human being on the high seas or on waters navigable from the sea, caused by negligence, in the absence of an Act of Congress or a statute of a State, giving a right of action therefor. That question was answered by this court in the negative, and the decision entirely covers the present case.

The motion to dismiss the appeal is denied, and the decree of the Circuit Court is affirmed.

[238] BRIGIDO BOTILLER ET AL., *Plffs. in Errr.*,
v.
DOMINGA DOMINGUEZ.

(See S. C. Reporter's ed. 238-256.)

Mexican Treaty—court will not enforce as against an Act of Congress—jurisdiction of board to settle private land claims in California—Mexican grant not valid unless confirmed by such board.

1. If an Act of Congress is in conflict with the Treaty with Mexico, the court is bound to follow the statutory enactments of its own government, instead of the treaty.

2. This court, in cases involving Mexican grants, has no power to set itself up as the instrumentality for enforcing the provisions of a treaty with a foreign nation which the Government of the United States, as a sovereign power, chooses to disregard.

3. There is no distinction as to the jurisdiction of the board to settle private land claims in California created by the Act of March 3, 1851, between claims derived from the Spanish or Mexican Government, which were perfect under the laws of those governments, and those which were incipient, imperfect or inchoate.

4. No title to land in California dependent upon Spanish or Mexican grants can be of any validity which has not been submitted to and confirmed by the board provided for that purpose in the Act of 1851; or, if rejected by that board, confirmed by the District or Supreme Court of the United States.

[No. 1370.]

Submitted Jan. 7, 1889. Decided April 1, 1889.

IN ERROR to the Supreme Court of the State of California, to review a judgment of that Court affirming a judgment of a Superior Court of the State for the plaintiff in an action of ejectment. *Reversed.*

The facts are stated in the opinion.

Mr. **J. M. Gitchell**, for plaintiffs in error:

The United States, by the Act of March 3, 1851, established a special tribunal, to which all claims to lands made by virtue of any right or title derived from the Spanish or Mexican Government were required to be presented, and gave to such tribunals, and to the federal courts therein designated, plenary and exclusive jurisdiction over all such claims.

Teschemacher v. *Thompson*, 18 Cal. 11; *Semple* v. *Hagar*, 27 Cal. 163; *Fremont* v. *U. S.* 58 U. S. 17 How. 553 (15: 244); *U. S.* v. *Fossatt*, 62 U. S. 21 How. 447 (16: 186); *U. S.* v. *Castillero*, 67 U. S. 2 Black, 158 (17: 376); *U. S.* v. *Flint*, 4 Sawy. 48; *Newhall* v. *Sanger*, 92 U. S. 764 (23: 770); *Hickey* v. *Stewart*, 44 U. S. 3 How. 762 (11: 814).

No court, state or federal, has jurisdiction to determine the validity of any claim to lands in California by virtue of any right or title derived from the Spanish or Mexican Government other than such claims as were presented to the board of land commissioners appointed under the Act of Congress of March 3, 1851, within two years after the date of said Act.

Swat v. *U. S.* 1 Hoffm. Land Cases, 230; *Burgess* v. *Gray*, 57 U. S. 16 How. 48 (14: 839).

No state court can have jurisdiction to pass upon the validity of the title of lands composing a part of the public domain of the United States.

Wilcox v. *Jackson*, 38 U. S. 13 Pet. 515 (10: 264); *Gibson* v. *Chouteau*, 80 U. S. 13 Wall. 99 (20: 536); *Bagnell* v. *Broderick*, 38 U. S. 13 Pet. 450 (10: 235); *Jourdan* v. *Barrett*, 45 U. S. 4 How. 169 (11: 924).

Mr. **A. L. Rhodes**, for defendant in error:

The record in the cause does not present any federal question, and the writ of error should be dismissed.

Owings v. *Norwood*, 9 U. S. 5 Cranch, 344 (3: 120); *Henderson* v. *Tenn.* 51 U. S. 10 How. 311 (13: 434); *Long* v. *Converse*, 91 U. S. 112 (23: 234); *Miller* v. *Lancaster Nat. Bank*, 106 U. S. 542 (27: 289).

The grant of the Rancho Las Virgenes constituted a perfect Mexican title.

Hornsby v. *U. S.* 77 U. S. 10 Wall. 231 (19: 900); *Malarin* v. *U. S.* 68 U. S. 1 Wall. 289 (17: 595); *Graham* v. *U. S.* 71 U. S. 4 Wall. 261 (18: 333); *U. S.* v. *Pico*, 72 U. S. 5 Wall. 539 (18: 696); *Van Reynegan* v. *Bolton*, 95 U. S. 35 (24: 351); *U. S.* v. *Moreno*. 68 U. S. 1 Wall. 400 (17: 633); *Fremont* v. *U. S.* 58 U. S. 17 How. 561 (15: 247); *U. S.* v. *Vaca*, 59 U. S. 18 How. 556 (15: 485); *Pico* v. *U. S.* 69 U. S. 2 Wall. 281 (17: 857); *U. S.* v. *Johnson*, 68 U. S. 1 Wall. 329 (17: 598).

The title being perfect under the colonization law of Mexico and the regulations of 1828, it was not required to be presented to the board of land commissioners under the Act of 1851.

Minturn v. *Brower*, 24 Cal. 644; *Stevenson* v. *Bennett*, 35 Cal. 431; *Steinbach* v. *Moore*, 30 Cal. 507; *Seale* v. *Ford*, 29 Cal. 107; *Banks* v. *Moreno*, 39 Cal. 287; *U. S.* v. *Percheman*, 32 U. S. 7 Pet. 87 (8: 604); *U. S.* v. *Clarke*, 33 U. S. 8 Pet. 465 (8: 1001); *U. S.* v. *Wiggins*, 39 U. S. 14 Pet. 349 (10: 481); *U. S.* v. *Arredondo*, 31 U. S. 6 Pet. 691 (8: 547); *Henderson* v. *Poindexter*, 25 U. S. 12 Wheat. 543 (6: 718); *U. S.* v. *Phila. & N. O.* 52 U. S. 11 How. 648 (13: 834); *U. S.* v. *Pillerin*, 54 U. S. 13 How. 9 (14: 28); *Dent* v. *Emmeger*, 81 U. S. 14 Wall. 312 (20: 839).

Congress had not power, under the Constitution, to require the presentation of perfect titles to the board of land commissioners, under the penalty of forfeiture of the land.

New York City v. *Miln*, 36 U. S. 11 Pet. 102 (9: 648); *U. S.* v. *Vallejo*, 66 U. S. 1 Black, 554 (17: 234); *U. S.* v. *Workman*, 68 U. S. 1 Wall. 761 (17: 710); *U. S.* v. *Osio*, 64 U. S. 23 How. 278 (16: 459).

The court will take judicial notice of the laws of Mexico relating to the granting of public lands.

U. S. v. *Turner*, 52 U. S. 11 How. 668 (13: 857); *Fremont* v. *U. S.* 58 U. S. 17 How. 557 (15: 245); *U. S.* v. *Perot*, 98 U. S. 428 (25: 251); *Payne* v. *Treadwell*, 16 Cal. 231.

Mr. Justice **Miller** delivered the opinion of the court:

This is a writ of error to the Supreme Court of the State of California.

The action was in the nature of ejectment, brought in the Superior Court of the County of Los Angeles by Dominga Dominguez against Brigido Botiller and others, to recover possession of a tract of land situated in said county, known as Rancho Las Virgenes. The title of the plaintiff was a grant claimed to have been made by the Government of Mexico to Nemecio Dominguez and Domingo Carrillo on the first day of October, 1834; but no claim under this grant had ever been presented for confirmation to the board of land commissioners appointed under the Act of Congress of March

3, 1851 (9 Stat. at L. 631), "to ascertain and settle the private land claims in the State of California," and no patent had ever issued from the United States to anyone for the land or for any part of it.

It appeared that the defendants, Botiller and others, prior to the commencement of the action, had settled upon and severally were in the occupancy of the respective parcels or tracts of land claimed by them, and had improved and cultivated the same, and were in [239] the possession thereof, with the purpose and intention of holding and improving the several tracts of land so severally held as preemption or homestead settlers, claiming the same to be public lands of the United States. It was shown that they were competent and proper persons to make preemptions or homestead claims, and that the land in controversy was within the territorial limits of the so called Rancho Las Virgenes.

On this state of facts the Judge of the inferior court instructed the jury as follows:

"*First*. It is made my duty to construe the written instruments received in evidence in this case and to declare their legal effect. I therefore instruct you that the documents, Plaintiff's Exhibits A and B, and the acts evidenced thereby under the Mexican law in force at the time they were made, constituted a perfect grant and operated to vest in the grantees therein named all the right, title and interest of the Mexican Government. They vested as much title under the laws of Mexico in the grantee as does a patent from the United States to the patentee under our system of government.

"*Second*. The title to the land by grant from Mexico, being perfect at the time of the acquisition of California by the United States, the grantee was not compelled to submit the same for confirmation to the board of commissioners established by the Act of Congress of March 3d, 1851, nor did the grantee, Nemecio Dominguez, forfeit the land described in the grant by a failure to present his claim for confirmation before said board of commissioners, and the title so acquired by the grantee may be asserted by him or his successor in interest in the courts of this country."

To this ruling and instruction the defendants excepted. Judgment was rendered for plaintiff, which was affirmed by the Supreme Court of the State of California; and to that judgment this writ of error is directed.

The principal error assigned, and the only one necessary to be considered here, is in the following language:

"The court erred in holding that under the said Act of Congress of March 3d, 1851, it was not necessary for each and every person claiming lands in California by virtue of any right or title derived from the Spanish or Mexican Governments to present such claim to the board of land commissioners appointed under said Act."

The question presented is an important one in reference to land titles in the State of Cali- [243] fornia, and is entitled to our serious consideration. Although it has been generally supposed that nearly all the private claims to any of the lands acquired by the United States from Mexico by the treaty of peace made at the close of the Mexican war have been presented to and passed upon by the board of commissioners appointed for that purpose by the Act of 1851, yet claims are now often brought forward which have not been so passed upon by that board, and were never presented to it for consideration. And if the proposition on which the Supreme Court of California decided this case is a sound one, namely, that the board constituted under that Act had no jurisdiction of, and could not by their decree affect in any manner, a title which had been perfected under the laws of the Mexican Government prior to the transfer of the country to the United States, it is impossible to tell to what extent such claims of perfected titles may be presented, even in cases where the property itself has by somebody else been brought before that board and passed upon.

The proposition seems to have been occasionally the subject of comment in the Supreme Court of California in the early days, after the land commission had ceased to exist, and it has also been frequently considered in decisions of this court of the same period. It is urged very forcibly by counsel for the plaintiff in error that this court has fully decided against it in several well considered cases, and that previous to the case of *Minturn* v. *Brower*, 24 Cal. 644, the decisions, or at least the intimations, of the Supreme Court of California were also against the doctrine.

By the treaty of peace, known as that of Guadalupe Hidalgo, of February 2, 1848 (9 Stat. at L. 922), which closed the controversies and the war between the United States and Mexico, a cession was made of a very large territory by the Government of Mexico to the Government of the United States. This was a transfer of the political dominion and of the proprietary interest in this land; but the Government of Mexico caused to be inserted in the instrument certain provisions intended for the protection of private property owned by Mexicans within this territory at the time the treaty was made; and it may be conceded that the [244] obligation of the United States to give such protection, both by this treaty and by the law of nations, was perfect.

That portion of this territory which afterwards became a part of the United States under the designation of the State of California had been taken possession of during the war, in the year 1846. Most of it was in a wild state of nature, with very few resident white persons, and very little land cultivated within its limits. Article XI of the treaty describes it in the following language:

"Considering that a great part of the territories which, by the present treaty, are to be comprehended for the future within the limits of the United States, is now occupied by savage tribes, who will hereafter be under the exclusive control of the Government of the United States, and whose incursions within the territory of Mexico would be prejudicial in the extreme, it is solemnly agreed that all such incursions shall be forcibly restrained by the Government of the United States, whensoever this may be necessary."

This extract from the treaty shows the char-

acter of the country which was acquired by the United States under that instrument.

Very soon after the American army took possession of California in 1846 it was discovered that rich mines of the precious metals were abundant in that country, and a rush of emigration, almost unparalleled in history, to that region commenced, which was continued from that time on for many years. It was in this condition, as to population, of the territory itself, with a proprietary title in the United States to a vast region of country included within its limits, in which miners, ranchmen, settlers under the Mexican church authorities, and claimants under Mexican grants were widely scattered, that the State of California was admitted into the Union, and the necessity was presented for ascertaining by some means the validity of the claims of private individuals within its boundaries, and to establish them as distinct from the lands which belonged to the government. To this end Congress passed a statute on the 3d day of March, 1851, entitled [245] "An Act to Ascertain and Settle the Private Land Claims in the State of California." (9 Stat. at L. 631.) The first section of that statute reads as follows:

"SEC. 1. That for the purpose of ascertaining and settling private land claims in the State of California, a commission shall be, and is hereby, constituted, which shall consist of three commissioners, to be appointed by the President of the United States, by and with the advice and consent of the Senate, which commission shall continue for three years from the date of this Act, unless sooner discontinued by the President of the United States."

Several of the succeeding sections are devoted to providing for officers, declaring their duties, directing the mode of taking depositions and regulating the sessions of the commissioners, the administration of oaths, and other matters. The eighth section is as follows:

"SEC. 8. That each and every person claiming lands in California by virtue of *any right or title derived from the Spanish or Mexican Government* shall present the same to the said commissioners when sitting as a board, together with such documentary evidence and testimony of witnesses as the said claimant relies upon in support of such claims; and it shall be the duty of the commissioners, when the case is ready for hearing, to proceed promptly to examine the same upon such evidence, and upon the evidence produced in behalf of the United States, and to decide upon the validity of the said claim, and, within thirty days after such decision is rendered, to certify the same, with the reasons on which it is founded, to the District Attorney of the United States in and for the district in which such decision shall be rendered."

The ninth and tenth sections provide for appeals by the claimant and by the government from the decisions of this commission, first to the District Court of the United States within that district, and from thence to this court.

The eleventh section, prescribing the rule by which the commissioners shall decide these cases is as follows:

"SEC. 11. That the commissioners herein provided for, and the district and supreme courts, in deciding on the validity of any claim [246] brought before them under the provisions of this Act, shall be governed by the Treaty of Guadalupe Hidalgo, the law of nations, the laws, usages, and customs of the government from which the claim is derived, the principles of equity, and the decisions of the Supreme Court of the United States, so far as they are applicable."

Section 13 declares:

"That all lands, the claims to which have been finally rejected by the commissioners in manner herein provided, or which shall be finally decided to be invalid by the District or Supreme Court, *and all lands the claims to which shall not have been presented to the said commissioners within two years after the date of this Act, shall be deemed, held, and considered as part of the public domain of the United States;* and for all claims finally confirmed by the said commissioners, or by the said district or supreme court, a patent shall issue to the claimant upon his presenting to the general land office an authentic certificate of such confirmation, and a plat or survey of the said land, duly certified and approved by the Surveyor-General of California, whose duty it shall be to cause all private claims which shall be finally confirmed to be accurately surveyed, and to furnish plats of the same," etc.

"SEC. 15. That the final decrees rendered by the said commissioners, or by the District or Supreme Court of the United States, or any patent to be issued under this Act, shall be conclusive between the United States and the said claimants only, and shall not affect the interests of third persons."

Two propositions under this statute are presented by counsel in support of the decision of the Supreme Court of California. The first of these is, that the statute itself is invalid, as being in conflict with the provisions of the Treaty with Mexico, and violating the protection which was guarantied by it to the property of Mexican citizens, owned by them at the date of the treaty; and also in conflict with the rights of property under the Constitution and laws of the United States, so far as it may affect titles perfected under Mexico. The second proposition is, that the statute was not intended to apply to claims which were supported by a complete and perfect title from the Mexican Gov- [247] ernment, but, on the contrary, only to such as were imperfect, inchoate, and equitable in their character, without being a strict legal title.

With regard to the first of these propositions it may be said, that so far as the Act of Congress is in conflict with the Treaty with Mexico, that is a matter in which the court is bound to follow the statutory enactments of its own government. If the treaty was violated by this general statute enacted for the purpose of ascertaining the validity of claims derived from the Mexican Government, it was a matter of international concern, which the two States must determine by treaty, or by such other means as enables one State to enforce upon another the obligations of a treaty. This court, in a class of cases like the present, has no power to set itself up as the instrumentality for enforcing the provisions of a treaty with a

foreign nation which the Government of the United States, as a sovereign power, chooses to disregard. *The Cherokee Tobacco*, 78 U. S. 11 Wall. 616 [20: 227]; *Taylor* v. *Morton*, 2 Curtis, 454; *Head Money Cases*, 112 U. S. 580, 598 [28: 798, 803]; *Whitney* v. *Robertson*, 124 U. S. 190, 195 [31: 386, 388].

The more important question, however, is—Does the statute, in its provisions for the establishment and ascertainment of private land claims in that country which was derived from Mexico, apply to such as were perfected according to the processes and laws of Mexico at the time the treaty was entered into, or is it limited to those imperfect and inchoate claims where the initiation of the proceedings necessary to secure a legal right and title to the property had been commenced but had not been completed?

There is nothing in the langunge of the statute to imply any such exclusion of perfected claims from the jurisdiction of the commission. The title of the Act, so far as it can be relied on, repels any such distinction; it is "to ascertain and settle the private land claims in the State of California;" and the first section above quoted, uses the same terms, "That for the purpose of ascertaining and settling private land claims in the State of California, a commission shall be, and is hereby, constituted," etc. The eighth section, which prescribes the functions of the court and its duties, says: [248] "That *each and every* person claiming lands in California by virtue of *any right or title derived from the Spanish or Mexican Government*, shall present the same to the said commissioners when sitting as a board, . . . and it shall be the duty of the commissioners, when the case is ready for hearing, to proceed promptly to examine the same," etc.

In all this there is no hint or attempt at any distinction, as to the claims to be presented, between those which are perfect and those which are imperfect in their character. On the contrary, the language of the eighth section is as precise and comprehensive as it could well be made, in that it includes every person claiming lands in California "by virtue of any right or title derived from the Spanish or Mexican Government."

The fifteenth section declares that the final decrees rendered in such cases, or any patent issued under the Act, "shall be conclusive between the United States and the said claimants only;" that is to say, it shall be conclusive on the United States and on the claimants, but it shall not conclude the rights of anybody else, if in a position to contest the action of the board.

It is not possible, therefore, from the language of this statute, to infer that there was in the minds of its framers any distinction as to the jurisdiction they were conferring upon this board, between claims derived from the Spanish or Mexican Government, which were perfect under the laws of those governments, and those which were incipient, imperfect, or inchoate.

Undoubtedly, under the powers which these commissioners had to examine into the existing claims, there would be a difference in the principles of decision which they would apply, as to their validity, between a perfected title under the Mexican Government and one which was merely incipient, and which the board might reject as unworthy of confirmation for many reasons. Of this the statute takes no note, except that it provides that the principles on which the commissioners are to act shall be those mentioned in the eleventh section, above quoted.

Nor is there any reason, in the policy upon which the statute is founded and the purposes [249] it was intended to subserve, why this distinction should be made. Obviously it was not intended to adjust or settle titles between private citizens making claim to the same lands. It is equally clear that the main purpose of the statute was to separate and distinguish the lands which the United States owned as property, which could be sold to others, either absolutely or by permitting them to settle thereon with preemption rights, or which could be reserved from public sale entirely, from those lands which belonged, either equitably or legally, to private parties under a claim of right derived from the Spanish or Mexican Governments.

When this was done the aim of the statute was attained. The order of the commissioners or the decree of the court established as between the United States and the private citizen the validity or the invalidity of such claims, and enabled the Government of the United States, out of all its vast domain to say "this is my property," and also enabled the claimant under the Mexican Government who had a just claim, whether legal or equitable, to say "this is mine." This was the purpose of the statute, and it was equally important to the object which the United States had in the passage of it, that claims under perfect grants from the Mexican Government should be established as that imperfect claims should be established or rejected.

The superior force which is attached, in the argument of counsel, to a perfect grant from the Mexican Government had its just influence in the board of commissioners, or in the courts to which their decisions could be carried by appeal. If the title was perfect, it would there be decided by a court of competent jurisdiction, holding that the claim thus presented was valid; if it was not, then it was the right and the duty of that court to determine whether it was such a claim as the United States was bound to respect, even though it was not perfect as to all the forms and proceedings under which it was derived. So that the superior value of a perfected Mexican claim had the same influence in a court of justice which is now set up for it in an action where the title is contested.

Nor can it be said that there is anything un- [250] just or oppressive in requiring the owner of a valid claim, in that vast wilderness of lands unclaimed, and unjustly claimed, to present his demand to a tribunal possessing all the elements of judicial functions, with a guaranty of judicial proceedings, so that his title could be established if it was found to be valid, or rejected if it was invalid.

We are unable to see any injustice, any want of constitutional power, or any violation of the treaty, in the means by which the United States undertook to separate the lands in which it held the proprietary interest from those which belonged, either equitably or by a strict legal

title, to private persons. Every person owning land or other property is at all times liable to be called into a court of justice to contest his title to it. This may be done by another individual, or by the government under which he lives. It is a necessary part of a free government, in which all are equally subject to the laws, that whoever asserts rights or exercises powers over property may be called before the proper tribunals to sustain them.

No doubt could exist, and none whatever would have been suggested, if this statute, instead of requiring the individual claimants to take notice that they were called upon to establish their title and to come forward and do so, had provided that the United States should sue everybody who was found in possession of any land in California at the time the treaty was made, and thus compel him to produce his title, if he had any. Such suits would have been sustained without hesitation, as being legal, constitutional and according to right. What difference can it make, then, that the party who is supposed to possess all the evidences which exist to support his claim is called upon to come before a similar tribunal and establish it by a judicial proceeding? It is beyond question that the latter mode is the more appropriate one to carry out the object intended, and better calculated to save time and expense, both to the government and to the party, and to arrive at safe and satisfactory conclusions.

The Government of the United States, when it came to the consideration of this statute was [251] not without large experience in a somewhat similar class of cases arising under the treaties for the purchase of Florida from Spain and of the Territory of Louisiana from France. In the latter case, particularly, a very much larger number of claims by private individuals existed to the soil acquired by the treaty, some of whom resided on the land which they claimed, while others did not; and the titles asserted were as diverse in their nature as those arising under the cession from Mexico. The Territory of Louisiana was held for many years by Spain, then by France, and the mode of acquiring rights, claims and titles to the public lands had been pursued according to the forms prescribed by those two governments, so that, upon its transfer to the United States, Congress was engaged for a long series of years in the business of establishing the valid claims and rejecting those which were invalid. There were in those cases many titles which had been perfected under the Spanish and French laws, as well as those which were in the most incipient stage of the assertion of rights.

It is not profitable perhaps to go into the details of the various Acts of Congress passed upon the subject, most of which were enacted in the interest of private claimants, and many of which were designed to remove the bar which had come to exist by reason of delays and failures to comply with the statutes in regard to the presentation of such claims. Congress appointed commissioners to investigate claims, who were to report to that body, and generally reserved the right of rejecting or confirming those reports. They changed the form and the number of these officers, the rules by which they should be guided, and the times limited for the assertion of private land claims; indeed, it is almost safe to say that some legislation may still be wanting, and may still be had, to do justice to unfortunate parties who have thus far not obtained the advantages of establishing their rights.

The wisdom, therefore, of the present Act in regard to the land claims in California is manifest by a comparison with those earlier statutes in which Congress undertook to do the same thing which it desired to do in the Act of 1851, but which failed for want of a clear, satisfactory and simple mode of doing it, by bringing [252] all the parties before a tribunal essentially judicial in its character, whose decisions should be final without further reference to Congress. But to have the benefit of the superiority of the plan of 1851 over former modes of establishing private rights to lands acquired by treaty, the later statute must be carried out in accordance with the intention found in its provisions.

This view has, we think, been established and prevailed without limitation or contradiction in the decisions of this court from the earliest period when it could be raised here under the statute. In the case of *Fremont* v. *United States*, 58 U. S. 17 How. 542, 553 [15: 241, 244], the supreme court, in the opinion delivered by *Chief Justice* Taney, said:

"It will be seen, from the quotation we have made, that the 8th section embraces not only inchoate or equitable titles, but legal titles also; and requires them all to undergo examination and to be passed upon by the court. The object of this provision appears to be, to place the titles to land in California upon a stable foundation, and to give the parties who possess them an opportunity of placing them on the records of the country, in a manner and form that will prevent future controversy. In this respect it differs from the Act of 1824, under which the claims in Louisiana and Florida were decided. The jurisdiction of the court, in these cases, was confined to inchoate equitable titles, which required some other act of the government to vest in the party the legal title or full ownership. If he claimed to have obtained from either of the former governments a full and perfect title, he was left to assert it in the ordinary forms of law, upon the documents under which he claimed. The court had no power to sanction or confirm it when proceeding under the Act of 1824, or the subsequent laws extending its provisions."

In the subsequent case of *United States* v. *Fossatt*, 62 U. S. 21 How. 445, 447 [16:186], this proposition is repeated in the most emphatic language, as follows:

"The matter submitted by Congress to the inquiry and determination of the board of commissioners by the Act of 3d March 1851 (9 [253] Stat. at L. 632, § 8), and to the Courts of the United States on appeal, by that Act and the Act of 31st August, 1852 (10 Stat. at L. 99, § 12), are the claims 'of each and every person in California, by virtue of any right or title derived from the Spanish or Mexican Government.' And it will be at once understood that these comprehend all private claims to land in California. The effect of the inquiry and decision of these tribunals upon the matter submitted is final and conclusive. If unfavorable to the claimant, the land 'shall be deemed,

held, and considered as a part of the public domain of the United States;' but if favorable, the decrees rendered by the commissioners or the courts 'shall be conclusive between the United States and the claimants.' These Acts of Congress do not create a voluntary jurisdiction, that the claimant may seek or decline. All claims to land that are withheld from the board of commissioners during the legal term for presentation, are treated as nonexistent, and the land as belonging to the public domain."

In the case of *United States* v. *Castillero*, 67 U. S. 2 Black, 17, 158 [17: 360, 376], it was said:

"Power to decide upon the validity of any claim presented to land in California, by virtue of any right or title derived from the Spanish or Mexican Government, as matter of original jurisdiction, is, by the Act of the 3d of March, 1851, exclusively conferred upon the commissioners appointed under the first section of that Act."

In the case of *Newhall* v. *Sanger*, 92 U. S. 761, 764 [23: 769, 770], it was said, in speaking of the Statute of 1851, that "claims, whether grounded upon an inchoate or a perfected title, were to be ascertained and adequately protected."

We will only refer to one other case, that of *More* v. *Steinbach*, 127 U.S. 70, 81 [*ante*, 51, 55], decided at the last term, where the whole subject was carefully reviewed in the opinion of *Mr. Justice* Field. In regard to the question now before us the court in that opinion said:

"It follows from what is thus said that it would be a sufficient answer to the contention [254] of the defendants, that the grant under which they claim to have acquired a perfect title conferred none. The grantees were not invested with such title, and could not be, without an official delivery of possession under the Mexican Government, and such delivery was not had, and could not be had, after the cession of the country, except by American authorities acting under a law of Congress. But independently of this consideration, and assuming that the title under the grant was perfect, the obligation of the grantee was none the less to present his claim to the board of land commissioners for examination. The ascertainment of existing claims was a matter of vital importance to the government in the execution of its policy respecting the public lands; and Congress might well declare that a failure to present a claim should be deemed an abandonment of it, and that the lands covered by it should be considered a part of the public domain."

It is said by counsel for defendant in error that there would never have been any doubt upon this question were it not for certain *dicta* in the cases here referred to. We are unable to perceive any sufficient reason for calling these expressions of the court whose judgment must be final on the subject, "*dicta*," for we feel bound to say that they were observations pertinent to the matter under consideration, and seem to have met the entire approbation of the court in whose behalf they were uttered; and as they embraced a very considerable period of time, during which a contrary opinion would have saved much labor to the court, we must believe that the opinions thus expressed without variation were the well considered views of this court when they were delivered.

A careful examination of the decisions of the Supreme Court of California on this subject will show that if they do not absolutely support this view, they contain nothing contrary to it, until the case of *Minturn* v. *Brower*, 24 Cal. 644. That court, in the case of *Teschemacher* v. *Thompson*, 18 Cal. 11, said:

"By the Act of March 3, 1851, the government has afforded the means of protecting all titles, legal or equitable, acquired previous to the cession. Its power to thus provide results from the fact that it is sovereign and supreme as to all matters connected with the treaty and [25 the enforcement of the obligations incurred thereunder. . . It must determine for itself what claims to property existed at the date of the treaty."

And so in *Semple* v. *Hagar*, 27 Cal. 163, shortly after the decision of *Minturn* v. *Brower*, *supra*, the court used the following language:

"The court will take judicial notice that, according to the provisions of the Act of Congress of March 3, 1851, every person claiming lands in California, by virtue of any right or title derived from the Spanish or Mexican Government, should present his petition for the confirmation of his title to the board of land commissioners, and that such proceedings must be had thereupon, before said board or the District or Supreme Court of the United States, that a final decree confirming the title of the claimant to the land must be entered before the patent for the land could be issued. A patent could not be issued for the land claimed under a Mexican grant, unless such proceedings were first had for the confirmation; and it is not pretended that they were not had in respect to the Jimeno grant. The patent was issued only in pursuance of the decree of confirmation, and for the purpose of carrying it into effect."

These cases show that the doctrine has not been considered as well settled in California against the views herein expressed until the case now before us, or rather until that of *Phelan* v. *Poyoreno*, 74 Cal. 448, was decided, which is referred to by the court as the foundation of its judgment in the present action. That case was argued before a commission of the supreme court, whose judgment was adopted by the supreme court of the State, under a law of California which prescribes this mode of appellate jurisdiction.

Upon the mere question of authority these decisions of the Supreme Court of the United States, and of the Supreme Court of California, would be decisive against the judgment of the latter court in this case. But we are quite satisfied that upon principle, as we have attempted to show, there can be no doubt of the proposition, that no title to land in California dependent upon Spanish or Mexican grants can be of any validity which has not been sub- [25 mitted to and confirmed by the board provided for that purpose in the Act of 1851; or, if re-

jected by that board, confirmed by the District or Supreme Court of the United States.

This proposition requires that the judgment of the Supreme Court of California in the case before us be reversed. It is accordingly so ordered, and the case remanded to that Court for further proceedings in conformity with this opinion.

---

[284] JOHN M. DAVIES ET AL., *Plffs. in Err.*,
v
CHARLES E. MILLER ET AL., Exrs.

(See S. C. Reporter's ed. 284-291.)

Collector's decision as to duties.

The notice of dissatisfaction with the decision made by the collector on the rate and amount of duties may, under the Act of 1864, be given at any time after the collector's decision and before the expiration of ten days from the final ascertainment and liquidation of the duties as stamped upon the entry.

[No. 1279.]

Argued Jan. 14, 15, 1889. Decided April 1, 1889.

IN ERROR to the Circuit Court of the United States for the Southern District of New York, to review a judgment for the defendants, in an action to recover back duties exacted on goods imported by plaintiffs in 1873. *Reversed.*

The facts are stated in the opinion.

Messrs. Edwin B. Smith and **Stephen G. Clarke** for plaintiffs in error.

Mr. **G. A. Jenks**, *Solicitor-Gen.*, for defendants in error.

Mr. Justice **Gray** delivered the opinion of the court:

This was an action against the executors of a late collector of the Port of New York to recover back duties exacted on goods imported by the plaintiffs in July, August and September, 1873.

At the trial, the plaintiffs introduced evidence tending to show that the duties exacted and paid were excessive; that appeals to the Secretary of the Treasury were taken and this action brought in due time; and that the protest as to each entry was filed after the collector's decision on the rate and amount of duties, but before the date of the final ascertainment and liquidation of the duties, as stamped upon the entry.

The court directed a verdict for the defendants, on the ground that the protest was filed "before the liquidation of the entry to which it referred, and not within ten days thereafter, as required by law." The plaintiffs duly ex-
[285] cepted to the ruling, and, after judgment for the defendants, sued out this writ of error.

The Customs Acts in force at the time of the importation of these goods contained the following provisions:

The collector and the naval officer are required to make and to indorse upon the importer's entry a gross estimate of the amount of the duties on the merchandise to which the entry relates; and the merchandise cannot be lawfully landed until the amount of the estimated duties has been first paid or secured to be paid, and a permit granted. Act of March 2, 1799, c. 22, § 49, 1 Stat. at L. 664; Rev. Stat. § 2869.

The merchandise must be appraised, or bonds given by the importer in double its estimated value, before it is delivered from the custody of the officers of the customs. If the collector deems any appraisement too low, he may order a new appraisement, and may cause the duties to be charged accordingly. If the importer is dissatisfied with the appraisement, the collector must order another appraisement by two appraisers of a specified class, and, if they disagree, decide between them; and the appraisement thus determined shall be final and duties levied accordingly. Acts of May 28, 1830, c. 147, §§ 2, 4, 4 Stat. at L. 409, 410; August 30, 1842, c. 270, § 17, 5 Stat. at L. 564; March 3, 1851, c. 38, § 3, 9 Stat. at L. 630; Rev. Stat. §§ 2899, 2929, 2930.

On the entry of any merchandise, the decision of the collector of customs at the port of importation and entry, as to the rate and amount of duties to be paid on such merchandise, shall be final and conclusive against all persons interested therein, unless the owner, importer, agent or consignee of the merchandise "shall, within ten days after the ascertainment and liquidation of the duties by the proper officers of the customs, as well in cases of merchandise entered in bond as for consumption, give notice in writing to the collector on each entry, if dissatisfied with his decision, setting forth therein distinctly and specifically the grounds of his objection thereto, and shall, within thirty days after the date of such ascertainment and liquidation, appeal therefrom to the Secretary of the Treasury." Act of June 30, 1864, c. 171, § 14, 13 Stat. at L. 214; Rev. Stat. § 2931.

The question is whether the period allowed [286]
for filing the protest or notice of dissatisfaction with the decision made by the collector at the time of the entry upon the rate and amount of duties extends from the time of that decision, or only from the date of the final ascertainment and liquidation of the duties as stamped upon the entry, until ten days after that date; or, in other words, whether this period, which is admitted to expire ten days after the ascertain ment and liquidation of the duties as so stamped, begins at the date of the stamp, or at the earlier date of the collector's original decision upon the estimated rate and amount of duties.

The determination of this question will be aided by a brief consideration of the history of the law before the passage of the Act of 1864.

Under the earlier Acts of Congress, which contained no provision on this subject, an importer who had paid unauthorized duties, under protest, and in order to obtain possession of his goods, might recover them back from the collector in an action of assumpsit for money had and received. *Elliott* v. *Swartwout*, 35 U. S. 10 Pet. 137 [9: 373].

The Act of March 3, 1839, c. 82, § 2, requiring the collector to pay the money into the Treasury, notwithstanding the protest of the importer, and giving the importer a right of appeal to the Secretary of the Treasury, was held by this court, at January Term, 1845, to take away the importer's right to bring an action of assumpsit. 5 Stat. at L. 348; *Cary* v. *Curtis*, 44 U. S. 3 How. 236 [11: 576].

Then came the Act of February 26, 1845, c.

providing that nothing in the Act of 1889 should have that effect; "Nor shall any action be maintained against any collector, to recover the amount of duties so paid under protest, unless the said protest was made in writing, and signed by the claimant, at or before the payment of said duties, setting forth distinctly and specifically the grounds of objection to the payment thereof." 5 Stat. at L. 727.

Under that Act, *Chief Justice* Taney, sitting in the circuit court, held that a protest might be made prospectively, so as to cover subsequent similar importations, because, said the [287] Chief Justice, "The protest is legally made when the duties are finally determined, and the amount assessed by the collector; and a protest before or at that time is sufficient notice, as it warns the collector, before he renders his account to the Treasury Department, that he will be held personally responsible if the portion disputed is not legally due; and that the claimant means to assert his rights in a court of justice." *Brune* v. *Marriott*, Taney, 132, 144. And his decision was affirmed by the judgment of this court. *Marriott* v. *Brune*, 50 U. S. 9 How. 619 [13: 282].

That judgment, though criticised in *Warren* v. *Peaslee*, 2 Curtis, 281, was generally regarded and acted on as laying down a general rule establishing the validity of prospective protests. *Steegman* v. *Maxwell*, 3 Blatchf. 365; *Hutton* v. *Schell*, 6 Blatchf. 48, 55, and *Fowler* v. *Redfield*, there cited; *Wetter* v. *Schell*, 11 Blatchf. 193, 196, and *Chouteau* v. *Redfield*, there cited.

None of these cases were brought up to this court; and in some of them the rule was applied under the Act of March 3, 1857, c. 98, § 5, which provided that on the entry of any merchandise, the decision of the collector of customs at the port of importation as to its liability to duty or exemption therefrom should be final and conclusive against the owner, importer, consignee or agent of such merchandise, unless he should, "within ten days after such entry, give notice to the collector in writing of his dissatisfaction with such decision, setting forth therein distinctly and specifically his grounds of objection thereto," and should, "within thirty days after the date of such decision, appeal therefrom to the Secretary of the Treasury." 11 Stat. at L. 195.

The phrase "within ten days after such entry" was thus treated as fixing a *terminus ad quem* and not a *terminus a quo*, or, in other words, as limiting the time after which a protest should not be made, but permitting it to be made as early as it could have been made under the previous law.

The Act of 1857 applied only to cases where the question was whether the goods imported were or were not subject to duty at all, and left [288] the case of goods admitted to be dutiable, the rate and amount of duties being alone in question, to be governed by the Act of 1845, requiring the protest to be filed at or before the time of paying the duties. *Barney* v. *Watson*, 92 U. S. 449 [23: 730].

We are then brought to the Act of 1864, which, as already stated, provides that, on the entry of any merchandise, the decision of the collector as to the rate and amount of duties shall be final and conclusive, unless the importer shall, "within ten days after the ascertainment and liquidation of the duties by the proper officers of the customs, give notice in writing to the collector on each entry, if dissatisfied with his decision."

This Act requires the notice of dissatisfaction with the collector's decision to be filed "within ten days after the ascertainment and liquidation of the duties" (instead of within ten days after the entry of the goods, as in the Act of 1857), evidently for the reason stated by *Mr. Justice* Bradley, in *Barney* v. *Watson*, above cited: "In most cases the amount, and in many cases the rate, could not be ascertained until after examination and appraisement; and hence a limitation to ten days from the time of entry would often, perhaps generally, deprive the party of any remedy at all." 92 U. S. 453 [23: 731].

The Act of 1864, by requiring the notice of dissatisfaction to be given on each entry, necessarily prevents such a notice as to any goods from being given before the entry thereof and precludes a prospective protest, covering future entries or importations. *Ullman* v. *Murphy*, 11 Blatchf. 354.

But the matter to which the notice of dissatisfaction applies is the decision of the collector on the rate and amount of the duties; the whole purpose of the notice is to give the collector opportunity to revise that decision; and that purpose is as well accomplished by giving the notice as soon as the goods have been entered and the duties estimated by the collector, as by postponing the giving of the notice until after the final ascertainment and liquidation of the duties has been made and stamped upon the entry.

The clause requiring the importer to give such notice "within ten days after the ascertainment and liquidation of the duties" must, therefore, according to the fair and reasonable interpretation of the words as applied to the [281 subject matter, be held to fix only the *terminus ad quem*, the limit beyond which the notice shall not be given, and not to fix the final ascertainment and liquidation of the duties as the *terminus a quo*, or the first point of time at which the notice may be given.

In the case at bar, the result is that the notice on each entry, having been given after the collector's decision and before the expiration of ten days from the date of finally stamping upon the entry the ascertainment and liquidation of the duties, was seasonable.

This conclusion is in accordance with a decision of *Judge* Shipman in the Circuit Court for the Southern District of New York, in October, 1878, in the case of *Keyser* v. *Arthur*, not reported, but mentioned in a circular of the Treasury Department of July 8, 1879, and shown by minutes produced at the argument of the present case to have been as follows: Two distinct entries of goods for immediate consumption were made, the one September 15, and the other October 10, 1878, and the duties were estimated by the collector and paid forthwith. The notice of dissatisfaction with the collector's decision was given as to the first entry October 1, and as to the second entry October 24, 1878, and each entry was stamped as finally liquidated November 6, 1878. *Judge* Shipman held the protests or notices of dissatisfaction with the collector's decisions to be

seasonable, saying: "When the collector had officially and in writing upon the entry ascertained and liquidated the duties upon the goods named in such entry at a certain rate of duty, a protest within ten days after such ascertainment and liquidation and an appeal within thirty days thereafter are good and valid as to time, although subsequently to the date of such ascertainment, liquidation, appeal and protest the collector revises the amount of such liquidation and makes a final ascertainment and liquidation at the same rate of duty. The first ascertainment and liquidation is in fact a final one as to rate. A protest and appeal within the statutory time after the final liquidation are also good and valid. The uniform practice in this port for many years, as to time of protest and appeal, in conformity with this rule, which [290] practice has been sanctioned by all the officers of the government, is of much importance in the decision of this question."

Our conclusion also accords with decisions of state courts, expounding similar words in other statutes. *Young* v. *The Orpheus*, 119 Mass. 179; *Atherton* v. *Corliss*, 101 Mass. 40; *Levert* v. *Read*, 54 Ala. 529.

Some expressions of judges of this court, not having this point before them, might seem to support the opposite conclusion, especially the language of *Chief Justice* Waite, in *Watt* v. *United States*, 15 Blatchf. 29, decided July 1, 1878, and that of *Mr. Justice* Strong in *Westray* v. *United States*, 85 U. S. 18 Wall. 322 [21:763]. But in *Watt's Case*, the only question of time presented or considered related, not to giving the collector notice of dissatisfaction with his decision, but to taking an appeal to the Secretary of the Treasury; and the adjudication of the Chief Justice, that the collector's decision upon the rate and amount of duties, if not duly appealed from, was final and conclusive in a case where the duties had not been paid to obtain possession of the goods, but were sued for by the United States, was overruled, with his concurrence, in *United States* v. *Schlesinger*, 120 U. S. 109 [30:607]. And in *Westray's Case*, the importer never gave any notice of dissatisfaction with the collector's decision, or took any appeal to the Secretary of the Treasury; and the only point adjudged was that the importer was not entitled to notice from the collector, of his decision, before being bound thereby or required to give a notice of dissatisfaction or take an appeal.

It was insisted by the Solicitor-General that "The views of the Department, legally expressed, so far as they appear in the record, recognize the true interpretation of the statutes to be that the protest must be filed after the final ascertainment and liquidation of the duties."

But the orders and circulars of the Treasury Department, given in evidence at the trial, either merely repeat the words of the Act of 1864, without giving them any construction, or else clearly show that, from the time of the passage of that Act until long after the entries now in question, the practical construction was to allow the notice of dissatisfaction to be [291] given at any time after the collector's decision estimating the rate and amount of duty at the time of the entry of the goods, provided it was not given after ten days from the final ascertainment and liquidation of the duties as stamped upon the entry.

The circular of the Treasury Department of September 30, 1878, and the opinion of the Attorney-General to the Secretary of the Treasury of October 31, 1878 (16 Opinions of Attorneys-General, 197), requiring notices of dissatisfaction, under § 2931 of the Revised Statutes, to be filed after the final liquidation of the duties, were based on a misconception of the scope and effect of the decision in *Watt's Case*, above cited. The circular of the Treasury Department of July 8, 1879, re-established the practice which, as therein stated, had prevailed before that decision at the Port of New York "and all the other prominent ports of the United States, under which protests and appeals had been recognized, both by the customs officers and by this Department, as valid if filed at any time before the expiration of the time mentioned in the section of law cited." And the old practice appears to have been since constantly recognized and acted on until 1886, when the Treasury Department again undertook to establish the opposite rule.

Judgment reversed, and the case remanded to the Circuit Court with directions to set aside the verdict and order a new trial.

EDWARD H. REYNES, Surviving Assignee, *Appt.*, [354]
v.
FREDERIC DUMONT ET AL.

FREDERIC DUMONT ET AL., *Appts.*,
v.
CHARLES M. FRY, Trustee, ET AL.

(See S. C. Reporter's ed. 354-395.)

Banker's lien—for particular debt—for general balance—presumption—acceptance, after decree—remedy at law.

1. A general lien in favor of a bank or banker may be implied from the usage of the business, but it does not arise upon securities accidentally in the possession of the bank, or not in its possession in the course of its business as such, nor where the securities are in its hands under circumstances, or where there is a particular mode of dealing, inconsistent with such general lien.

2. Where securities are pledged to a banker for the payment of a particular loan or debt, he has no lien on the securities for a general balance or for the payment of other claims.

3. Bonds, not lodged in the hands of a banker in the ordinary course of banking business but for a specific purpose, and when that purpose was accomplished permitted to remain for safe keeping, are not subject to a banker's lien for the ultimate debit balance in favor of the banker against the parties who placed them there.

4. The presumption, as between customer and banker, that the securities or property of the customer found in the possession of the banker have been left with him to secure him generally against loss, is a rebuttable presumption.

5. The acceptance, by appellants, of what was confessedly theirs, as the receiving of the remaining bonds and money after the liens decreed thereon were satisfied, is not an admission that the decree they seek to reverse was not erroneous, nor does it take away the jurisdiction of this court to review the decree.

6. Where the subject matter of a suit belongs to the class over which a court of equity has jurisdiction; and the objection that the complainant has an

adequate remedy at law is not made until the hearing in the appellate tribunal, such objection is too late.

[Nos. 174, 175.]

Argued Jan. 23, 24, 1889. Decided April 8, 1889.

APPEALS from decrees of the Circuit Court of the United States for the Southern District of New York, adjudging the amounts of alleged liens upon bonds, and directing that so much of the bonds as might be necessary to pay the same should be sold. *Reversed.*

See *S. C.* below, 18 Fed. Rep. 578.

[355] Statement by *Mr. Chief Justice* **Fuller:**

On the 14th of June, 1877, Frederic Dumont, August Henry Reine, and John David Moekel, who composed the firm of F. Dumont & Co., filed their bill in the Circuit Court of the United States for the Southern District of New York against Charles M. Fry, trustee of Schuchardt & Sons, bankrupts; François Laborde and E. H. Reynes, assignees of Charles Cavaroc & Son, bankrupts; the Louisiana National Bank of New Orleans, and N. W. Casey, receiver of the New Orleans National Banking Association, claiming to be the owners of two hundred and thirty-two bonds of the City of New Orleans, each for the amount of one thousand dollars, which had been in the possession of Schuchardt [356] & Sons and were then in the possession of Fry, their trustee in bankruptcy, who also held moneys received from the coupons attached to the said bonds; and by amendment set forth that the bonds were purchased by Cavaroc & Son with the money of Dumont & Co., for their joint account, but not in the name of Dumont & Co., nor in the joint names of Dumont & Co. and Cavaroc & Son; that Fry, trustee, refused to deliver up the bonds, and claimed to hold them as security for sums due him from Cavaroc & Son and Casey, as receiver; and that Fry is not entitled to hold the bonds. The bill prays that he be decreed to deliver them up, with the money received from the sale of coupons cut therefrom, and for further relief.

Fry claimed to hold the bonds upon a banker's lien for a balance of account due Schuchardt & Sons by Cavaroc & Son, and upon a lien by agreement for an unsecured balance due by the New Orleans National Banking Association, to the extent of $100,000. A decree was rendered December 6, 1882, sustaining the liens asserted by the defendant Fry, and directing him to account as to the amount of the same and of certain coupons which he had collected.

March 5, 1884, a final decree was entered, adjudging the amounts due on account of the alleged liens respectively, and directing that so much of the said bonds as might be necessary to pay the same with interest, should be sold under the direction of the master. This was done, and Fry was paid the amount of said liens, and the balance was turned over to Dumont & Co. and Reynes, surviving assignee, Laborde having died pending the action.

The master's final report was confirmed February 11, 1885, and appeals were prosecuted by Dumont & Co. and Reynes, surviving assignee, to this court.

The following facts appear in evidence:

Schuchardt & Sons were bankers at the City of New York during the period covered by the transactions in question, and correspondents and financial agents of Cavaroc & Son, who were engaged in the commission and banking business in the City of New Orleans. Charles Cavaroc, the senior member of the latter firm, was at the same time president of the New Or- [357] leans National Banking Association, with which Schuchardt & Sons had similar business relations. Two hundred and seventy-five bonds of the City of New Orleans, a large part of them belonging to Dumont & Co., though it is not shown that Schuchardt & Sons had notice of this, were left by Cavaroc & Son with Schuchardt & Sons in September, 1870, the number having been subsequently reduced to two hundred and thirty-two.

The bonds were purchased in 1870, with the proceeds of drafts on Dumont & Co., to the amount of about a million francs, which had been renewed from time to time until after the failure of Cavaroc & Son, when Dumont & Co. paid them to the amount of 484,000 francs. Cavaroc & Son had negotiated drafts for 200,000 francs on Dumont & Co., with Schuchardt & Sons, shortly before the failure, growing out of the original purchase of bonds, and these not having been paid were charged back to Cavaroc & Son by Schuchardt & Sons, thereby contributing to produce a debit balance of $7,454.22 on January 12, 1874, although protested drafts on Maxquelier Fils for $6,562.23 were also included.

These drafts for 200,000 francs had been accepted by Dumont & Co., and were protested, not for nonacceptance, but for nonpayment; and an action was commenced January 3, 1874, by Schuchardt & Sons against Dumont & Co. on their acceptances in the Supreme Court of New York, and an attachment levied on the bonds in question here, in the hands of Schuchardt & Sons. Satisfaction of recovery in this suit would more than pay the debit balance of Cavaroc & Son as finally stated in these proceedings.

It was stipulated between the attorney for Dumont & Co. and the attorneys for the assignee of Cavaroc & Son, that the balance of the bonds and moneys to be paid over after the liens awarded by the court were satisfied, should be divided in the proportion of seventy-four per cent to Dumont & Co. and twenty-six per cent to Cavaroc & Son.

Both the Cavarocs testify that the bonds were left with Schuchardt & Sons for safe keeping, Cavaroc, Jr., referring to a particular loan on them in the fall of 1870, which led to their being sent to New York, where they then [358] remained on account of the heavy express charge, and the fact that New York was a better market in which to dispose of them; but Wells, a member of Schuchardt & Sons, testifies:

"On the 20th of September, 1870, we deposited with M. Morgan's Sons the above $275,000 New Orleans bonds against a loan made by them of $200,000 to the Bank of New Orleans, and $110,000 to C. Cavaroc as part collateral for those loans. On the 21st December, 1870, M. Morgan's Sons returned us the above bonds against the payment of the two loans. On the 6th of March, 1871, we delivered $5,000 of the above bonds to Henry Beers by order of C.

Cavaroc. On the 1st of April, 1871, we delivered $160,000 of above bonds to Marks & Febre by order of C. Cavaroc. On the 29th of May, 1871, we delivered $110,000 of above bonds to M. Morgan's Sons against a loan of $100,000. On the 30th May, 1871, Marks & Febre returned us above $160,000 bonds, against which we loaned Cavaroc $100,000, falling due 2d of October, 1871. On the 2d of October, 1871, M. Morgan's Sons returned us the $110,000 bonds on payment of their loan. On the 27th of February, 1872, we forwarded to Cavaroc, at New Orleans, $8,000 of above bonds as per his order. On the 13th of April, 1872, we delivered $160,000 of above bonds to Importers and Traders' National Bank of this city by order of Cavaroc. On the 28th of June, 1872, the Importers' and Traders' National Bank returned us the above $160,000 bonds. On the 31st of August, 1872, we delivered $30,000 of above bonds to Spofford Brothers & Co. by order of Cavaroc. On the 27th of May, 1873, we delivered $50,000 of the above bonds to the Importers' and Traders' National Bank of New York by order of Cavaroc. On the 3d of September, 1873, the Importers' and Traders' National Bank returned the above $50,000 bonds."

He considers that the bonds were held by his firm for any balances that the New Orleans National Banking Association might owe, and says that Schuchardt & Sons held them up to time they were pledged to the bank as security for "whatever Cavaroc & Son might be indebted for," but that they had no written authority to hold the bonds collaterally for the [359] bank's indebtedness, that he knew of, other than the letter of Cavaroc, Senior, of February 15, 1873, hereinafter set forth. He testifies, however, that there was "a general understanding to that effect arrived at with (in) conversations with C. Cavaroc, Jr., at different times when he was in New York; among others, in August or September, 1873," although in another portion of his evidence he says: "I think they were alluded to in 1873, during his visit to New York, in the fall of 1873. I feel quite confident they were alluded to in 1873," which is "as positive" as he "can be upon the subject." Any such understanding is specifically denied by Cavaroc, Jr., who asserts that he—

"Never made any agreement, verbal or otherwise, in reference to the bonds, with Mr. Wells or anyone else, and never made with Mr. Wells, or any one living, any agreement or arrangement about the bonds or any other bonds to be held as general security in matters with the New Orleans National Banking Association, or even C. Cavaroc & Son; never had any conversation with Mr. Wells about the bonds in any manner whatever, outside of a remark, as above stated, in the summer of 1873, to know if our trust was all right in their vault, which any merchant would pass upon in conversation to be certain that no accident happened to the trust or deposit for safe keeping."

The New Orleans National Banking Association dealt largely in foreign bills of exchange, which is negotiated through Schuchardt & Sons. By the course of business the amount of the foreign bills it remitted from time to time to Schuchardt & Sons was credited by the latter to the former, and the latter drew upon the former from time to time as funds were required. According to the custom of business at New Orleans, advances are made by bankers to shippers in anticipation of the actual delivery of drafts with accompanying documents, and the New Orleans Bank consequently advanced funds before it could remit drafts, so as to be credited by Schuchardt & Sons with their amount. For the mutual profit of both concerns the bank had at times been permitted by Schuchardt and Sons to draw in advance of remittances. Cavaroc & Son were not only bankers but large shippers of [360] cotton abroad, and drew against the proceeds of their bills of exchange, which were accompanied by bills of lading.

On the 4th of December, 1871, Schuchardt & Sons wrote the cashier of the New Orleans National Banking Association the following letter:

"NEW YORK, Dec. 4th, 1871.

N. AUGUSTINE, Esq., Cashier New Orleans Banking Association, New Orleans, Louisiana.

"Dear Sir: In reply to your inquiry about drawing in advance against purchases of exchange we beg to say that we granted that facility at a time when your foreign exchange business with us was much more extensive and consequently more remunerative than at present, and when we held as security a deposit of N. O. City bonds. We were, moreover, induced to make these advances (although, as we explained at the time, we could make a much more lucrative use of the money by using it here) on the assurance of Mr. Cavaroc that you would only temporarily require such facilities, and that your business would increase to such an extent that the future would largely compensate us for any present sacrifices. To our regret, however, such has not been the case, and your business, instead of increasing, has greatly diminished. However, in order to evince our desire of doing all in our power to contribute to the development of our correspondence, we hereby authorize you to draw upon us in advance of remittances to the extent of $100,000 (one hundred thousand dollars), with the understanding that such drafts are to represent exchange bought and paid for. We presume also that when the loan of the Trust Co., which falls due on the 21st inst., will be paid the securities will be replaced in our possession."

February 6, 1873, the cashier of the bank wrote Schuchardt & Sons:

"NEW ORLEANS, Feb'y 6, 1873. [361]

"Mess. F. SCHUCHARDT & SONS, NEW YORK:

"Are we still authorized to draw, *à découvert*, $100,000 (one hundred thousand dollars) against purchases of exchange advised by wire?

H. T. BLACHE, Cashier.

To which Schuchardt & Sons replied:

"NEW YORK, Feb'y 11, 1873.

"HENRY BLACHE, Esq., Cashier of the N. O. National Banking Association, New Orleans:

"The credit of $100,000 (one hundred thousand dollars) *à découvert* was predicated upon the deposit of New Orleans City bonds, and on

their withdrawal we, of course, supposed the agreement canceled.

F. SCHUCHARDT & SONS."

Whereupon the cashier answered:

"NEW ORLEANS, February 15th, 1878.

"Messrs. SCHUCHARDT & SONS, New York:

"Your letter of December 4th, 1871, authorized us to draw, in advance of remittance, to the extent of $100,000 (one hundred thousand dollars), represented by purchases of exchange, advised by telegraph. There was no mention of a deposit of city bonds to guarantee such overdraft, and we have been acting ever since under the impression that the credit was still in force. We now note that it is canceled, and beg leave to refer you to the private letter of the president on the subject.

H. T. BLACHE, Cashier."

And on the same day, the president, Cavaroc, wrote Schuchardt & Sons a letter which he gives thus:

"NEW ORLEANS, February 15th, 1878.

"Mess. SCHUCHARDT & SONS, New York:

"In your letter of the 11th instant you say: 'The credit of $100,000 (one hundred thousand [362] dollars), *à découvert*, was predicated upon the deposit of New Orleans City bonds, and on their withdrawal we, of course, supposed the agreement canceled.' You know that exchange at New Orleans is purchased by making advances until such time as the drafts are delivered, and it was with view of making our mutual transactions more active that we asked this credit, '*à découvert*,' at the time. In view of your remark I have nothing to say, except to authorize you to consider a portion of the bonds belonging to my firm, which you have in your possession, as collateral security in case you should not be covered (*en cas de découvert.*)

C. CAVAROC, *Pres't.*"

On behalf of Fry the following was introduced as the original:

"NEW ORLEANS, *the* 15 *Fevrier*, 1878.

"Messieurs F. SCHUCHARDT & SONS, New York:

"Messieurs & Amis: Dans votre lettre du 11 ct. vous dites: The credit of $100 M à découvert was predicated upon the deposit of New Orleans City bonds, and on their withdrawal we, of course, supposed the agreement canceled.

"Vous savez que le change à New Orleans est acheté en faisant des avances jusqu'à ce que les traites soient livrées & c'est afin d'activer nos rapports que nous vous avions demandé, à l'époque, ce découvert.

"Devant votre observation, il n'y a rien à dire si ce n'est de vous autoriser à considérer comme sécurité collatérale une partie des 'bonds' que vous avez à ma maison, en cas de découvert.

"Votre dévoué, C. CAVAROC."

And which is translated by Mr Wells as follows:

"NEW ORLEANS, 15 February, 1878.

"Messrs. F. SCHUCHARDT & SONS, New York:

"Dear Sirs: In your letter of 11th inst. you say 'the credit of $100 | M *à découvert* was predicated upon the deposit of New Orleans City bonds, and on their withdrawal we, of course, supposed the agreement canceled.'

[363] "You are aware that exchange is purchased at New Orleans by making advances until the delivery of the drafts, and it was for the purpose of giving activity to our correspondence that we at the time requested this *découvert*.

"In the face of your observation there is nothing to say except to authorize you to consider a part of my firm's bonds which you have as collateral security in case of (unsecured—uncovered) balance of account.

"Yours Truly, C. CAVAROC."

Schuchardt & Sons replied:

"NEW YORK, Feb. 27, 1878.

"To the Cashier of the New Orleans Banking Association, New Orleans:

"In reply to your worthy president's letter of the 15th inst., we take pleasure in authorizing you, in accordance with the terms therein stated, to value on us '*à découvert*' for a sum not exceeding as maximum $100,000 (one hundred thousand dollars) against exchange purchases. F. SCHUCHARDT & SONS."

In the summer of 1878, Cavaroc, Jr., had two interviews with Wells, in New York, on his way to and from Europe, at which nothing was said about these bonds "outside of a possible remark, to be positive that nothing had happened to our trust in their hands;" but the subject of the amount of exchange Schuchardt & Sons would be willing to negotiate for the firm or the bank was mentioned, an agreement arrived at to limit certain lines of credit, and a memorandum drawn up by Wells, in French, or partly in French and partly in English, as follows:

"Not more than £10 | M per week on Hambro.

"Not more than fr. 200 | M on first bankers of Paris.

"As much business paper (in French, *effets de commerce*) as shall be desired, we reserving the right (as much in the interest of the bank as in our own) to limit the amounts on any one house.

"When the bank sends the drafts of the bank on third parties (Havre, Bordeaux, Marseilles, [364] etc., etc.) it must put in the hands of Messrs. C. C. & Son, in trust a deposit of securities, there to remain until the acceptance or the payment, if we deem proper to await the payment.

"Seignouret's line, fr. 500 | M (for bank and C. C. & Son)."

This must have been, Wells says, the latter part of August or the early part of September, 1873; and this is confirmed by the evidence of Cavaroc, Jr., that he arrived in New Orleans the first part of September."

Mr. Wells thinks he received a letter from Mr. Cavaroc dated on or about September 15, and that he answered under date of September 19, 1873, and Cavaroc produces a letter, as follows:

"NEW YORK, Sept. 19, 1873.

"My Dear Mr. CAVAROC:

"I have sufficiently explained to you, on your last visit here, that we should prefer receiving from the bank only such paper as it should have purchased, and, after mature consideration and consultation with Mr. Schuchardt, who has returned some days since, we have determined to request the bank to limit its exchange business with us to the forwarding of such drafts made by third parties as it shall deem proper to purchase; and we beg you so to in-

form the bank . . . We hope that the bank shall give great activity to its operations on the above basis, and, in order to assist it as much as possible, we still authorize it to draw against purchases of exchange, and in advance of the remittances, to the extent of $100,000, on the conditions specified in the letter of Mr. Cavaroc of 15th February last.

"Believe me, my dear sir and friend, yours most devotedly, LAWRENCE WELLS.

"Money was loaned until to-morrow @ 1½ per cent.; and you will readily understand that it is no fun to be out of money, as we are now. The system which I propose to you above will in a measure remedy this, because we can draw as soon as we shall receive your telegram advising purchases."

An extract from the minute book of the bank, September 20, 1873, reads as follows:

[365] "CALLED MEETING.

"NEW ORLEANS NAT. BANKING ASS'N,
NEW ORLEANS, Sept. 20th, 1873.

"Present: C. Cavaroc, Pres't; A. Tertrou, J. Aldige, John Rocchi, H. A. Mouton, P. S. Wiltz, L. Haas, Jr.

"The president stated that the object of the meeting was to inform the board of the unpleasant state of affairs in general, and particularly of the panic then prevailing in New York.

"The suspension of Jay Cooke & Co., which was already announced, and which no doubt would be followed by many others, would surely tend to increase the present uneasiness and render our money market still more stringent. He would therefore ask the board to suggest or adopt such measures as in their judgment they would think expedient to avert the impending crisis; whereupon it was unanimously—

"*Resolved*, That all precautionary measures to be taken be left entirely to the discretion of the president, the board hereby ratifying all that may be done by him. It is further—

"*Resolved*, That with a view of securing the president against any eventual loss of the 232 7 per cent City of New Orleans bonds belonging to the firm of C. Cavaroc & Son, and actually pledged to F. Schuchardt & Sons, agents of the bank at New York, as collateral security for the payment of all foreign exchange bills sent them for negotiation and by them indorsed, that he be, and is hereby, authorized to select as guarantee from the portfolio of the bank such papers as he may think proper, to the extent of ($100,000) one hundred thousand dollars.

"On motion, it is further—

"*Resolved*, That the board hereby tender their thanks for the aid he is individually lending by leaving undisturbed a large cash balance ($80,000), eighty thousand dollars, standing to the credit of C. Cavaroc & Son on the books of the bank.

"And the board adjourned."

October 4, 1873, the bank and Cavaroc & Son failed. N. W. Casey was appointed receiver of the bank, and François Laborde and Edward H. Reynes assignees of Cavaroc & Son. Schu- [366]
chardt & Sons were adjudicated bankrupts February 19, 1876, and Charles M. Fry was appointed their trustee in bankruptcy.

The balance due from the New Orleans bank to Schuchardt & Sons on October 4, 1873, the date of the failure, adding $3.20 interest, from October 1, was $4,125.12, which was increased, by charging back protested drafts of acceptances and some minor items, to $197,501.35, as per the following account:

DR. *N. W. Casey, Receiver New Orleans Nat'l Banking Assoc.*
Charles M. Fry, trustee.

1873.					
Oct'r 1.	To	balance			$4,121 92
4.	"	days' interest on $4,121.92, @ 7 per cent			3 20
7.	"	unpaid rem. on Nat'l Park Bank			353 86
9.	"	protest charges on rem. on Phila., $156.75			2 06
14.	"	" " " $100			2 06
24.	"	" " " $230.47 & $130			4 12
28.	"	protested drafts on G. Honorat & Co. at Marseilles	f'cs 150,000		
		10 per cent damages	15,000		
			f'cs 165,000—487½		33,846 15
Nov'r 17.	"	unpaid acceptances of S. Frank & Co			12,500 00
	"	protest charges on same			1 31
Dec'r 29.	"	protested drafts on Seignouret Frères & Co., Bordeaux, p'ble per Paris	f'cs 250,000		
		10 per cent damages	25,000		
			f'cs 275,000—487½		56,410 26
1874.					
Jan'y 12.	"	protested drafts on A. Dutfoy & Co., at Paris	f'cs 200,000	29 Nov'r, 73	
			155,000	10 Dec., "	
			35,000	18 " "	
			10,000	19 " "	
		10 per cent damages	40,000		
			f'cs 440,000—487½		90,256 41
					$197,501 35

From this debt, certain amounts collected being deducted, a balance of $180,624.58 was left, making, with $14,691.05 due on gold account, a total indebtedness from the bank to [367]
Schuchardt & Sons of $195,315.63, for which a certificate was issued by the receiver April 8, 1879.

Schuchardt's cashier testified:

"The drafts on Dutfoy, Seignouret and Honorat were foreign exchange bills known as 'clean'—that is unaccompanied by documents—drawn by the New Orleans Banking Association on those parties. The one on the National Park Bank was drawn by the New Orleans National Banking Association to settle a collection made. The bills of exchange that figure up

on the gold account were mainly cotton shipper's exchange, accompanied by bills of lading."

The debit balance of the bank on the gold account, October 1, 1873, was $68,231.17, afterwards reduced to $14,691.05.

It appears from the evidence of Casey that Schuchardt & Sons, or Fry their assignee, claimed about $88,000 in the Union Bank of London belonging to the New Orleans bank, and other funds in the hands of Dutfoy & Co. of Paris, amounting to forty thousand francs, and that at the time of the failure of the bank "certain assets belonging to the bank were in the hands of parties claiming to hold them as collateral security for the indorsement of certain bills of exchange which had been negotiated through Schuchardt & Sons, said bills being drawn by the bank upon Seignouret Frères of Bordeaux, France. Suit was brought for the recovery of these assets, which resulted in my favor, as will appear by the decision of the Supreme Court of the United States in the case of *Casey* v. *Schuchardt*, 96 U. S. (6 Otto) 494 [24:790]."

In that case, *Mr. Justice* Bradley, delivering the opinion of the court, said:

"Schuchardt & Sons were bankers, in New York, through whom the New Orleans National Banking Association was in the habit of drawing on foreign houses, and who indorsed and disposed of the drafts, or transmitted them for collection, and made advances thereon. They were thus in the habit of indorsing and advancing on bills drawn by the bank on Seignouret Frères, of Bordeaux. In August and September they became uneasy, and required security; and it was [368] agreed between them and the bank that they would receive and indorse drafts on Seignouret Frères, and accept the drafts of the bank on themselves to a certain limited amount, upon being secured by a pledge of commercial securities, to be deposited in the hands of Charles Cavaroc & Son. In pursuance of this arrangement, on the 17th of September the bank transmitted to Schuchardt & Sons its drafts on Seignouret Frères to the amount of 250,000 francs, at the same time, drew on Schuchardt & Sons against said drafts for the sum of $50,000. On the same day, or the day following, securities of the bank to the amount of $60,000 were selected by the note clerk, by direction of Charles Cavaroc, president of the bank, put into an envelope indorsed with the name of Schuchardt & Sons, and handed to Cavaroc, who handed them to the cashier; and thereafter they were treated in precisely the same manner as the securities which were selected for the Crédit Mobilier and the Park Bank, as shown in the cases which have just been decided."

October 9, 1873, Cavaroc & Son telegraphed Schuchardt & Sons:

"NEW ORLEANS, Oct. 9, 1873.

"F. SCHUCHARDT & SONS, New York:

"Please deliver to L. Monrose two hundred and thirty bonds, one thousand dollars each, City of New Orleans seven per cent, held in trust for us.

"C. CAVAROC & SON."

Monrose replied:

"NEW YORK, Oct. 9, 1873.

"C. CAVAROC & SON, New Orleans:

"Schuchardt refuses delivering; says you pledged as security for bank.

"L. MONROSE."

And Schuchardt & Sons telegraphed:

"NEW YORK, Oct. 9th, 1873.

"C. CAVAROC & SON, New Orleans:

"According to your written authority we hold New Orleans City bonds as collateral security against Bank of New Orleans. We insist on your delivering to Reynes the bills [369] receivable held by you in trust. Answer; also reply about bill lading per Queenstown.

F. SCHUCHARDT & SONS."

October 11, Cavaroc & Son wrote Schuchardt & Sons:

"NEW ORLEANS, Oct. 11, 1873.

"Mess. F. SCHUCHARDT & SONS, New York:

"Gentlemen: 'According to your written authority we hold New Orleans City bonds as collateral security against Bank of New Orleans.'

"By this phrase you seem to imply that our 232 bonds ought to serve as a guarantee to you for the reimbursement of all kinds of debts and of all sums due by the bank.

"In response we refer you to the letter of our senior partner, C. Cavaroc, February 15th last, which you yourselves invoke as the authority on which you base your rights ('according to your written authority.')

"Our authority is contained in the following terms:

"'In your letter of the 11th inst. you say: "The credit of $100,000 *à découvert* was predicated upon the deposit of New Orleans City bonds, and on their withdrawal we, of course, supposed the agreement canceled."

"'You know that exchange at New Orleans is purchased by making advances until such time as the drafts are delivered, and it was with a view of making our mutual transactions more active that we asked this credit *à découvert* at the time.

"'In view of your remark, I have nothing to say except to authorize you to consider a portion of the bonds belonging to my firm, which you have in your possession, as collateral security in case you should not be covered.'

"You see that according to the authority which you invoke you have no right to cover yourself by means of these bonds, except those uncovered sums for which you might not have received the paper against which they were drawn at the moment of the demand for the restitution of the bonds.

"According to the books of the bank, which correspond within a few cents with the account [370] current rendered by you under date of Oct. 1st, it appears that all the drafts which the bank has made on you up to this day have been properly covered, and that is all we guaranteed by the deposit of our bonds.

"These bonds are, then, at this moment released, and we renew the order that you deliver them to L. Monrose, who is requested to receive them. Yours, &c.,

C. CAVAROC & SON."

The following definitions of "*à découvert*."

with translations, were furnished by counsel for Dumont & Co.:

"*Crédit à découvert: Avances faites par acceptations ou par débours de caisse, sans être garanties par connaissements des marchandises consignées ou des contre-valeurs.*

"Larousse, Grand Dictionnaire Universel.

"*Translation:* Advances made by acceptances or cash disbursements, which (advances) are not covered by bills of lading, consigned goods or other securities."

So Littré, Dictionnaire de la Langue Française:

"*À découvert.* Terme de commerce: *Être à découvert, être en avance, n'avoir aucune garantie des avances faites.* (À découvert, commercial expression. To be 'à découvert,' is to be in advance, to have no guaranty of the advances made.)"

So in the Dictionnaire de l'Académie:

"*À découvert. Être à découvert,* signifie en terme de commerce, n'avoir aucun gage, 'aucune garantie par sa créance.' (To be *à découvert* signifies to have no pledge, no security, for one's claim)."

So, too, Bescherelle, Dictionnaire Nationale:

"Commerce. *Être à découvert: N'avoir aucun gage de sa créance.* (Commerce; to be 'à découvert:' to have no security or pledge for one's claim.)"

Mr. Wells gives this as from the French dictionary of A. Spiers, 19th ed., Bamard, Bandry & Co., 12 Rue Bonaparte, Paris, 1866:

"*Découvert,* n. m. 1 (com.) (of accounts), uncovered balance."

Cavaroc, Senior, testifies:

"There is a usage and meaning. The words [371] '*à découvert*' we use more frequently in French than 'credit.' If I write in French to ask an open credit to a banker I will merely ask him: 'Let me draw on you *à découvert* for one or two hundred thousand dollars.' If I say to the banker, 'I will cover you with exchange to that amount,' as soon as I cover to that amount it is finished. I don't owe a cent to that amount, *à découvert* is closed, and I have a right to go on again. It is a revolving credit. For instance, with Schuchardt, suppose I draw to-day $100,000 on Schuchardt and it was *à découvert,* and the next morning or day after I sent to Schuchardt $100,000 of exchange bought from different houses here, my *à découvert* is finished —it is closed. As soon as I have remitted exchange for the $100,000 draft of the day preceding the *à découvert* is closed. Schuchardt is covered then. On the same day or next morning I have a right to draw $100,000 and cover again. As soon as I have remitted $100,000 exchange I have a right to draw again. Therefore, when the bank remitted exchange to cover what the bank had drawn under that credit, *à découvert,* the guarantee made by me, C. Cavaroc, ceased, and the right to hold these bonds ceased under that guarantee." . . . "I desire to say, in explanation of the '*à découvert*' spoken of in my testimony, that it had no relation to guarantee and to payment of the exchange remitted by the bank, nor of the solvency of the drawers or indorsers or acceptors, but merely embraced remittance of exchange by the bank. This is the signification of the words '*à découvert*' here and in France, and in the letters sent and received by me, extracts of which are annexed, the words are so understood."

The balance of account claimed by Schuchardt & Sons as due from Cavaroc & Son January 12th, 1874, was $7,454.22, to which certain costs, disbursements, and counsel fees, and a payment in settlement of a judgment on a $20,000 draft drawn on them by Cavaroc & Son, were added, with interest, making the amount December 19, 1882, some $25,715.22. The amount proved up by Schuchardt & Sons against the New Orleans Bank was $195,315.63, as has been stated. Upon this amount dividends had been paid before final decree to the amount of $117,189.38.

The circuit court held that the bonds were [372] pledged to secure Schuchardt & Sons for any overdrafts of the bank which might from time to time arise, to the extent of $100,000, and that Schuchart & Sons were entitled to hold the bonds subject to the pledge to the bank, as security for the indebtedness of Cavaroc & Son, by virtue of a banker's lien, 13 Fed. Rep. 423; and, further, that Cavaroc & Son had pledged the bonds to secure the whole indebtedness of the bank to Schuchardt & Sons, with a limitation on the extent of the liability, and had not pledged them to secure a limited part of the indebtedness, and that therefore the dividends were not to be applied ratably, but the bonds could only receive the benefit of any receipts from dividends after the indebtedness had been paid down to $100,000, 14 Fed. Rep. 293.

The original bill was ordered dismissed by the court *sua sponte* on the ground of want of jurisdiction in equity, *Dumont* v. *Fry,* 12 Fed. Rep. 21, but retained upon amendment. No objection on this ground appears to have been raised by the defendants until upon hearing here. As to allowance of interest, see 18 Fed. Rep. 578.

Mr. **Jno. E. Parsons,** for Reynes, assignee:

The bonds were not subject to a banker's lien. The lien does not exist where an agreement, express or implied, or the conduct of the parties, is inconsistent with its assertion.

Cent. Nat. Bank v. *Conn. Mut. L. Ins. Co.* 104 U. S. 54, 71 (26:693, 700); *Duncan* v. *Brennan,* 83 N. Y. 487; *Neponset Bank* v. *Leland,* 5 Met. 259: Story, Agency, § 381; *Vanderzee* v. *Willis,* 3 Bro. Ch. 21; *Brandao* v. *Barnett,* 3 Man. G. & S. 519; *Grant* v. *Taylor,* 3 Jones & S. 338, affirmed in 52 N. Y. 627; *Wyckoff* v *Anthony,* 9 Daly, 417; *Zelle* v. *German Sav. Inst.* 4 Mo. App. 401.

The pledge became discharged.

Action by a party secured which increases the hazard of the surety, discharges the security.

Chitty, Cont. 461.

Messrs. **James C. Carter** and **John M. Bowers,** for Fry, trustee:

A banker has a lien upon all funds and securities in his possession for the payment of a balance due to him on his general account with a customer, unless it appear that the funds or securities are held by him for a purpose inconsistent with such lien.

Davis v. *Bowsher*, 5 Term Rep. 488; *Bolland* v. *Bygrave*, Ry. & M. 273; *Brandao* v. *Barnett*, 12 Clark & F. 787; *Jones* v. *Peppercorne*, 1 Johns. (Eng.) 430; *Re European Bank*, L. R. 8 Ch. 41; *Re General Provident Assur. Co.* L. R. 14 Eq. 507; Story, Agency, § 391; Jones, Liens, § 241 *et seq.*

The party to whom the debt is not due so that it can be set off is entitled to hold as a security where his debtor is insolvent what he might hold as security if the debt were due.

1 Jones, Liens, § 246; *Ford* v. *Thornton*, 3 Leigh, 695; *Fourth Nat. Bank* v. *City Nat. Bank*, 68 Ill. 398; *Rothschild* v. *Mack*, 42 Hun, 72; 2 Story, Eq. Jur. §§ 1431-1444.

The decree of the court declaring the bonds subject to a lien for the payment of the residue of the debt remaining unpaid after the application of the entire amount of the dividends, was correct.

Ex parte Rushforth, 10 Ves. Jr. 409; *Wright* v. *Morley*, 11 Ves. Jr. 12; *Ellis* v. *Emmanuel*, L. R. 1 Exch. Div. 157; *Ex parte Hope*, 3 Mon. D. & DeG. 720, 8 Jur. 1128; *Midland Banking Co.* v. *Chambers*, 38 L. J. N. S. Ch. 478.

Mr. Edgar A. Hutchins and **Frederick R. Coudert**, for Dumont *et al.*:

The court erred in holding that Schuchardt & Sons, or their assignee in bankruptcy, were entitled to a banker's lien against Charles Cavaroc & Son upon the bonds issued for the balance due from Cavaroc to Schuchardt.

Grant v. *Taylor*, 3 Jones & S. 338, affirmed in 52 N. Y. 627.

The banker's lien does not extend to all securities happening to be in the banker's hands for any purpose.

Petrie v. *Myers*, 54 How. Pr. 513; Story, Agency, §§ 380-81; *Neponset Bank* v. *Leland*, 5 Met. 259; Grant, Banking, 168; 3 Pars. Cont. 262; *Duncan* v. *Brennan*, 83 N. Y. 487; *Wyckoff* v. *Anthony*, 9 Daly, 417, affirmed in 90 N. Y. 442. See also note, collection of cases on banker's lien, 33 Moak, Eng. Rep. 324.

A general lien for a balance of accounts is founded on custom, and is not favored.

2 Kent, Com. 12th ed. 636.

Mr. Chief Justice **Fuller** delivered the opinion of the court:

The circuit court held that Cavaroc & Son had pledged the bonds to Schuchardt & Sons as security for any unpaid balance of account due from the New Orleans Bank, with a limitation to $100,000 on the amount for which the bonds should be held liable. The unpaid balance was ultimately placed at $195,815.63. The larger part of this balance resulted from charging back the drafts on Seignouret Frères & Co., Honorat & Co., and Dutfoy & Co., which amounted, damages included, to over $180,000. The inquiry therefore presents itself, on this branch of the case, whether Schuchardt & Sons had a lien upon the bonds to secure these drafts in virtue of an agreement to that effect with Cavaroc & Son.

[382] When Schuchardt & Sons, on the 9th of October, 1873, refused to deliver the bonds on the order of Cavaroc & Son, they placed their refusal upon the ground that "according to your written authority we hold New Orleans City bonds as collateral security against Bank of New Orleans," and Wells, a member of the firm, testifies that the only written authority was the letter of Cavaroc of February 15, 1873. The letter thus appealed to as embodying the authority relied on must be examined in the light of the correspondence of which it forms so important a part. As early as December, 1871, Schuchardt & Sons had by letter authorized the bank to draw upon them "in advance of remittances to the extent of $100,000 (one hundred thousand dollars), with the understanding that such drafts are to represent exchange bought and paid for," and in February, 1873, when the bank asked "are we still authorized to draw *à découvert*, $100,000 (one hundred thousand dollars), against purchases of exchange advised by wire," the answer was, "The credit of $100,000 (one hundred thousand dollars) *à découvert* was predicated upon the deposit of New Orleans City bonds, and on their withdrawal we, of course, supposed the agreement canceled."

This assertion as to the deposit of bonds was denied by the cashier, and he then referred Schuchardt & Sons to a letter from the president, and that letter is the one in question. After quoting from Schuchardt's letter of February 11, their statement that the one hundred thousand-dollar credit was predicated on the deposit of New Orleans City bonds, Cavaroc thus proceeds: "You know that exchange at New Orleans is purchased by making advances until the drafts are delivered, and it was in order to accelerate our transactions that we requested that credit of you at that time. In view of your suggestion, there is nothing to be said, except to authorize you, in case you are uncovered, to treat as collateral security a portion of the bonds in your possession belonging to my firm."* And to this Schuchardt & Sons re- [383]
sponded to the bank, that "In accordance with the terms therein stated" (*i. e.*, in Cavaroc's letter), the bank might value on them "'*à découvert*,' for a sum not exceeding as maximum $100,000 (one hundred thousand dollars) against exchange purchases." Thus the written authority relied on was in no respect different from the understanding in the beginning, as shown by the letter of 1871, that the drafts to be drawn by the bank on the Schuchardts were "to represent exchange bought and paid for," and the bonds were to be held under the letters of February, 1873, as collateral to advances by the Schuchardts before remittances of the exchange. And as late as September 19, 1873, Wells wrote that Schuchardt & Sons still authorized the bank "to draw against purchases of exchange, and in advance of the remittances, to the extent of $100,000, on the conditions specified in the letter of Mr. Cavaroc of 15th February last."

"Exchange bought and paid for," meant bills drawn against shipments, and purchased by advances made to the shippers upon the strength of documents to be furnished by them with the bills, to repay the advances so made.

*"Vous savez que le change à New Orleans est acheté en faisant des avances jusqu'à ce que les traites soient livrées & c'est afin d'activer nos rapports que nous vous avions demandé, à l'époque, ce découvert.

"Devant votre observation, il n'y a rien à dire si ce n'est de vous autoriser à considérer comme sécurité collatérale une partie des 'bonds' que vous avez à ma maison, en cas de découvert."

It was to enable the bank to make such advances in New Orleans that Schuchardt & Sons on their part advanced to the bank, and, to assist the bank, Cavaroc & Son were willing to and did pledge the bonds as collateral, to a maximum of $100,000. The understanding was that the bonds should be held as collateral while Schuchardt & Sons were uncovered, that is to say, not covered by the remittance of exchange purchased, the bonds thus being used to bridge the interval between making the advances and the receipt of the drafts with bills of lading attached by Schuchardt & Sons.

The transactions between Schuchardt & Sons and the bank were very large, reaching, it is true, only about $700,000 during the month of September, but amounting to millions during the year; in fact, Wells testifies that sometimes the bank sent "over a million in one day."

[384] The parties were dealing in exchange to their mutual profit; and all that Schuchardt & Sons stipulated for, and all that Cavaroc & Son agreed to, was that the bonds should be held as security while the merchandise was being purchased and shipped, and drafts against the shipments transmitted to Schuchardt & Sons in liquidation of their advances.

We do not understand that Schuchardt & Sons were doing business absolutely without risk, nor that Cavaroc & Son, in view of the course of business, were regarded as called upon to guarantee Schuchardt & Sons at all events. The latter had the drawers, the drawees, the indorsers and the merchandise itself to rely on; and there is nothing in the letters or the testimony to indicate that, in addition to all this, they demanded, as to such drafts, other security. If a draft had gone forward with bill of lading attached, and the drawees refused to receive the consignment and accept the draft, and were otherwise under no obligation to do so, and the proceeds of the shipment sold for less than the amount of the draft, or if the acceptors became insolvent, and loss was thereby occasioned, Schuchardt & Sons, though they might, if such was the course of business, charge back the difference to the bank, could not, upon this evidence, claim that these bonds were security to make good a deficiency so created, and, even if they could, no such deficiency is shown to have occurred.

Upon what basis then can it be held that drafts drawn by the bank directly on Seignouret Frères & Co., Bordeaux, Honorat & Co., Marseilles, and Dutfoy & Co., Paris, "unaccompanied by documents," were secured by the bonds of Cavaroc & Son and Dumont & Co. by "written authority."

The drafts on Seignouret Frères & Co. appear to have been drawn September 17, 1873, for, with damages, $56,410.26, but the dates of the other drafts are not given, and the account between the bank and Schuchardt & Sons, prior to the first of October, 1873, is not before us. The drafts on Dutfoy & Co. amounting, with damages, to $90,256.41, were protested November 29, December 10, 13, and 19. The drafts on Honorat & Co. were protested October 28. No evidence is adduced on behalf of Schuchardt & Sons' trustee in bankruptcy [385] as to the length of time on which these drafts were drawn. We believe we are justified, then, in assuming that it was after the interview between Cavaroc, Jr., and Wells, placed by the latter as transpiring the last of August or first of September, when it was agreed that the amounts of business paper, that is, according to Wells, "bills of exchange drawn against shipments," which they would take, Schuchardt & Sons might limit, and the limitation was directly imposed of "not more than £10 | M per week on Hambro," and "not more than fr. 200 | M on first bankers of Paris;" and, further, that when the bank sent "the drafts of the bank on third parties (Havre, Bordeaux, Marseilles, etc., etc.), it must put in the hands of Messrs. C. C. & Son, in trust, a deposit of securities there to remain until the acceptance or the payment if we deem proper to await the payment." This was an arrangement made by Schuchardt & Sons and evidenced by a memorandum prepared, not by Cavaroc, but by Wells. It was not Cavaroc & Son, acting with reference to the bonds, who sought this agreement, but Schuchardt & Sons, acting for their own protection in reference to transactions other than those with which the bonds were connected. The drafts of the bank on third parties were not exchange bought and paid for, nor were drafts drawn by the bank on Schuchardt & Sons against these bills drawn by it directly on Europe, advances made by Schuchardt & Sons against "purchases of exchange advised by telegraph." Schuchardt & Sons could have had no expectation of receiving another set of bills drawn against shipments to repay advances made to the bank on these "clean" bills already in their hands. They must have relied, as to these bills, upon the credit of the bank, the indorsers and the drawees, and other securities deposited in the hands of Cavaroc & Son; and when Schuchardt, who appears to have been out of town, returned, and it was concluded to limit their operations, Wells writes to Cavaroc that they had "determined to request the bank to limit its exchange business with us to the forwarding of such drafts made by third parties as it shall deem proper to purchase." There is no intimation up to the 19th of September that Schuchardt & Sons regarded the bonds as pledged for anything ex- [386] cept the remittance of exchange created by drafts against shipments. The transactions in purchasing such exchange, and transactions in the way of accommodation to the bank, or of the purchase of its own drafts on Europe, were kept perfectly distinct, so far as appears. Cavaroc, Jr., testifies that in his interview with Wells, late in August or the first of September, when it was agreed that if the bank sent its own drafts there must be a deposit of securities to insure their acceptance or payment, no agreement was made, verbal or otherwise, in reference to these bonds, and nothing said about them, other than perhaps a casual remark. Wells does not deny this, although he says he feels "quite confident they were alluded to." But for a resolution purporting to have been passed by the directors of the bank on the 20th of September, there would be absolutely no evidence in this record that the bonds were to be or had ever been held as security for drafts drawn by the bank directly. These bonds did not belong to the bank. They were largely owned by Dumont & Co. They had never been used except upon a direct order from

Cavaroc & Son. A distinct agreement with the latter that they should be held for the debts of the bank must be shown in order to the maintenance of a lien upon them. The resolution does say that the bank, in order to secure its president against "any eventual loss" of the bonds "belonging to the firm of C. Cavaroc & Son, and actually pledged to F. Schuchardt & Sons, agents of the bank at New York, as collateral security for the payment of all foreign exchange bills sent them for negotiation, and by them indorsed," thereby authorizes him "to select as guarantee from the portfolio of the bank such papers as he may think proper, to the extent of ($100,000) one hundred thousand dollars," and that statement may be inconsistent with the theory that all the bonds were pledged for was simply until remittances of exchange actually bought and paid for were made; but when we consider the circumstances under which Cavaroc was situated, that resolution, under which securities to the amount of $100,000 were to be put into his hands, which might be held to secure drafts drawn by the bank itself, in accordance with the agreement with Schuchardt & Sons of the last of August or first of September, does not appear to us to overcome the written and other evidence as to the actual transaction. [387]

There is no element of estoppel about it, and it is a mere question whether a resolution of that kind passed when both Cavaroc & Son and the bank were on the brink of bankruptcy, should be taken as evidence of such cogency as to overthrow all the correspondence and testimony to the contrary. It may go to the credibility of Cavaroc, it is true. He may have told one story on the stand under oath, and may have told his directors another story in the bank, although it does not appear that he drew the resolution or was consulted as to the particular language in which it should be couched. The facts as we hold them to be were, that the bonds had been pledged, to the extent of $100,000, as collateral to the remittance of exchange, and that it had been agreed with Schuchardt & Sons, by Cavaroc on behalf of the bank, that, in relation to drafts drawn by the bank directly, other securities should be put in the hands of Cavaroc & Son to secure such last named drafts. Cavaroc therefore needed to have a resolution of the bank that he might take from its portfolio those additional securities, and the fact that the language of the resolution is broader than the terms of the pledge, or that it was inartificially drawn, or that it misrepresented the ownership of the bonds, does not entitle it to the weight attributed to it on the argument. As against third parties, the terms of a resolution of the directors of a national banking association, when the exigencies of a financial crisis are upon them, in the attempt to prefer one of the bank's officers, cannot properly be regarded as decisive upon the question of the facts actually existing in respect to such third parties in a given case, and Dumont & Co. and the general creditors of Cavaroc & Son ought not to be foreclosed by Cavaroc's presence when this resolution was passed. Besides, it is not inconsistent with the terms of the resolution, to confine the reference to foreign bills to all exchange actually purchased, in which view the resolution would simply assert that the pledge was designed to secure, not only the remittance, but the ultimate payment of such exchange, but could not be stretched to cover "clean" bills drawn by the bank itself. [388]

The learned Judge of the circuit court says: "In short, it is evident from the relations of the parties, their course of business, the correspondence between them, and the construction placed upon the transactions by Cavaroc himself, that the bonds were pledged to secure Schuchardt & Sons for any overdrafts of the banking association, to the extent of $100,000, which might from time to time arise. Such overdrafts were the credit *à découvert* contemplated by the parties, and constitute the unpaid balance of account due from the banking association to Schuchardt & Sons."

The relations of the parties were that both were dealers in exchange and making money out of it. The course of business was, advances by the bank to shippers, advances by Schuchardt & Sons to the bank to enable it to make those advances to the shippers, the use of the money by the shippers in the purchase of merchandise, and the remittance of drafts drawn against shipments to Schuchardt & Sons, in return for their advances. The correspondence between the parties from the first limited the transactions with which the bonds were concerned to exchange actually bought and paid for. This was the construction placed upon those transactions by both of the parties unless this resolution of the directors of the bank is to be held as conclusive to the contrary; the indebtedness of the bank was not the result of losses upon any drafts purchased in the regular course of business, but was the result of charging back unpaid drafts, which had been drawn by the bank directly upon parties in Europe, without any accompanying bills of lading. These drafts were discounted by Schuchardt & Sons, apparently in reliance, not simply upon the credit of the bank and the credit of Cavaroc & Son, if they indorsed such drafts, but upon the deposit of securities, as against them, in the hands of Cavaroc & Son at New Orleans; and the evidence of Casey shows that Cavaroc did undertake to get and hold securities for Schuchardt & Sons, as against drafts so situated. And this explains the telegram of Schuchardt & Sons to Cavaroc & Son of October 9: "We insist on your delivering to Reynes the bills receivable held by you in trust."

This drawing by the bank directly on Europe was either a recent course of proceeding or it was not. If not, it is clear that the bonds had no relation to such prior action. If of recent occurrence, it is equally clear that it was independent of the regular dealings in exchange, in respect to which the bonds were held as security to the extent and under the circumstances defined in the correspondence. [389]

As the bonds in large part did not belong to Cavaroc & Son, it is due to the latter to suppose that they had no intention of subjecting them to the risks now insisted upon; and the intimacy between Cavaroc & Son and Schuchardt & Sons, and the fact that the bonds were paid for by drafts on Dumont & Co., whose acceptances for a considerable part of the cost were held by Schuchardt & Sons, render the inference a not unreasonable one, that Schuchardt & Sons knew that Cavaroc & Son

be taken at the earliest opportunity. The above rule must be taken with the qualification that it is competent for the court to grant the relief sought, and that it has jurisdiction of the subject matter."

In *Wylie* v. *Coxe*, 56 U. S. 15 How. 415, 420 [14: 753, 755], it is said: "The want of jurisdiction, if relied on by the defendants, should have been alleged by plea or answer. It is too late to raise such an objection on the hearing in the appellate court, unless the want of jurisdiction is apparent on the face of the bill."

It was held in *Lewis* v. *Cocks*, 90 U. S. 23 Wall. 466 [23: 70], that if the court, upon looking at the proofs, found none at all of the matters which would make a proper case for equity, it would be the duty of the court to recognize the fact and give it effect, though not raised by the pleadings nor suggested by counsel. To the same effect is *Oelrichs* v. *Spain*, 82 U. S. 15 Wall. 211 [21:43]. The doctrine of these and similar cases is, that the court, for its own protection, may prevent matters purely cognizable at law from being drawn into chancery, at the pleasure of the parties interested; but it by no means follows, where the subject matter belongs to the class over which a court of equity has jurisdiction, and the objection that the complainant has an adequate remedy at law is not made until the hearing in the appellate tribunal, that the latter can exercise no discretion in the disposition of such objection. Under the circumstances of this case, it comes altogether too late even though, if taken *in limine*, it might have been worthy of attention.

The decrees are reversed at the costs of Fry, trustee, in this and the Circuit Court and the cause remanded for further proceedings in conformity with this opinion.

Reversed.

---

[301] HENRY AMY ET. AL., *Plffs. in Err.*,
v.
THE CITY OF WATERTOWN. (No. 1.)

(S. C. Reporter's ed. 301-320.)

Service of summons on city, when not sufficient—charter—statutory method of service must be followed—construction of state statute—resignation of officer.

1. Where the charter of a city requires service of a summons to be on the mayor of the city, and there is no mayor in office, service on the last mayor who has resigned and whose resignation has taken effect, is not sufficient.

2. A charter of a city, which provides that its officers shall hold their offices until their successors are elected and qualified, does not apply in case of resignation, especially where the law applicable to the city provides for their resignation.

3. Where a particular method of serving process is pointed out by statute, that method must be followed; and this rule is especially exacting in reference to corporations, and when the statute designates a particular officer upon whom process may be served no other officer or person can be substituted.

4. In the construction of a state statute, in a matter purely domestic, this court will give great weight to the decisions of the highest tribunals of the State.

5. Although the officer of a city upon whom process is to be served may have resigned from an improper motive, and although the plaintiffs are prejudiced by his action, it is *damnum absque injuria.*

[No. 196.]

Argued March 13, 1889. Decided April 8, 1889.

IN ERROR to the Circuit Court of the United States for the Western District of Wisconsin, to review an order setting aside a judgment on the ground that the summons was not properly served, and that consequently the Court had no jurisdiction. *Affirmed.*

The facts are stated in the opinion.

Mr. **George P. Miller** for plaintiffs in error.

Messrs. **Geo. W. Bird** and **Daniel Hall**, for defendant in error:

The construction put upon statutes by the supreme court of the State will be adopted and followed by the United States Courts.

Leffingwell v. *Warren*, 67 U. S. 2 Black, 599 (17: 261); *Luther* v. *Borden*, 48 U. S. 7 How. 40 (12: 581); *Burgess* v. *Seligman*, 107 U. S. 20 (27: 359); *Bucher* v. *Cheshire R. Co.* 125 U. S. 555 (31: 795).

Where there is no appearance, jurisdiction can be acquired only by service of process in the manner prescribed by law.

Hollingsworth v. *Barbour*, 29 U. S. 4 Pet. 466 (7: 922); *Pennoyer* v. *Neff*, 95 U. S. 714 (24: 565); *Harkness* v. *Hyde*, 98 U. S. 476 (25: 237); *St. Clair* v. *Cox*, 106 U. S. 350 (27: 222); *Alexandria* v. *Fairfax*, 95 U. S. 774 (24: 583); *Kibbe* v. *Benson*, 84 U. S. 17 Wall. 624 (21: 741); *Sacramento* v. *Fowle*, 88 U. S. 21 Wall. 119 (22: 592); *Settlemier* v. *Sullivan*, 97 U. S. 444 (24: 1110); *Evans* v. *Dublin & D. R. Co.* 14 Mees. & W. 142; *Walton* v. *Universal Salvage Co.* 16 Mees. & W. 438; *Towne* v. *London & L. Steamship Co.* 5 C. B. N. S. 730; *Mackreth* v. *Glasgow & S. W. R. Co.* 42 L. J. N. S. Exch. 82; *Garton* v. *Great Western R. Co.* 27 L. J. N. S. Q. B. 375; *Brydolf* v. *Wolf*, 32 Iowa, 509; *Lambert* v. *Sample*, 25 Ohio St. 336; *Hoen* v. *Atlantic & P. R. Co.* 64 Mo. 561; *Dixon* v. *Hannibal & St. J. R. Co.* 31 Mo. 409; *First Nat. Bank* v. *Wilson*, 80 N. C. 200; *Cherry* v. *North & S. R. Co.* 59 Ga. 446; *Michigan State Ins. Co.* v. *Abens*, 3 Ill. App. 488; *Ill. & M. Teleg. Co.* v. *Kennedy*, 24 Ill. 319; *St. Louis etc. R. Co.* v. *Dawson*, 3 Ill. App. 118; *Newlove* v. *Woodward*, 9 Neb. 502; *Scorpion S. Min. Co.* v. *Marsano*, 10 Nev. 370; *Chambers* v. *King W. I. Bridge Manufactory*, 16 Kan. 270; *Lake Shore & M. S. R. Co.* v. *Hunt*, 39 Mich. 469; *American Exp. Co.* v. *Conant*, 45 Mich. 642; *Union Pac. R. Co.* v. *Miller*, 87 Ill. 45; *Helms* v. *Chadbourne*, 45 Wis. 60; *Lehigh Valley Ins. Co.* v. *Fuller*, 81 Pa. 398; *People* v. *Bernal*, 43 Cal. 385; *Brisbane* v. *Peabody*, 3 How. Pr. 109; *Williams* v. *Van Valkenburg*, 16 How. Pr. 144; *Likens* v. *McCormick*, 39 Wis. 313.

Nor is this strictness enforced against corporations only. It maintains equally against individuals.

People v. *Bernal*, 43 Cal. 385; *Williams* v. *Van Valkenburg*, 16 How. Pr. 144; *Sheldon* v. *Comstock*, 3 R. I. 84; *Waddingham* v. *St. Louis*, 14 Mo. 190; *Settlemier* v. *Sullivan*, 97 U. S. 444 (24: 1110); *Patterson* v. *Busby*, 5 Mees. & W. 521; *Rehmstedt* v. *Briscoe*, 55 Wis. 616.

Where there are two officers with like powers and duties, the Legislature having designated

one of them, the process must be delivered to that one, and not to the other.

Charleston v. *Lunenburgh*, 21 Vt. 488; *Fairfield* v. *King*, 41 Vt. 611; *Scorpion S.Min. Co.* v. *Marsano*, 10 Nev. 870; *Chambers* v. *King W. I. Bridge Manufactory*, 16 Kan. 270.

Where the meaning of a statute is plain it is the duty of the court to enforce it, according to its obvious terms. In such a case there is no necessity for construction.

Edwards v. *Darby*, 25 U. S. 12 Wheat. 206 (6: 603); *U. S.* v. *Temple*, 105 U. S. 97 (26: 967); *Swift & C. & B. Co.* v. *U. S.* 105 U. S. 695 (26: 1109); *Ruggles* v. *Ill.* 108 U. S. 526 (27: 812).

[302] *Mr. Justice* **Bradley** delivered the opinion of the court:

The principal question in this case is, whether the defendant, the City of Watertown, was served with process in the suit so as to give the court below jurisdiction over it. In order to understand the bearing of the facts of the case, it will be necessary to give a brief abstract of the laws of Wisconsin which relate to it, and [303] these are mostly to be found in the charter of the City of Watertown and the Acts supplementary thereto. The state laws are referred to because they govern the practice of the federal courts in the matter under consideration. By the 5th section of the Act of June 1, 1872 (R. S. § 914), it is declared that "The practice, pleadings, and forms and modes of proceeding in civil causes, other than equity and admiralty causes, in the circuit and district courts, shall conform, as near as may be, to the practice, pleadings, and forms and modes of proceeding, existing at the time in like causes in the courts of record of the State within which such circuit or district courts are held." Were it not for this statute, the circuit courts themselves could prescribe, by general rule, the mode of serving process on corporations as well as on other persons.

By the temporary Process Act of September 29, 1789 (1 Stat at L. 93), if not otherwise provided, the forms of writs and executions (except their style), and modes of process in the circuit and district courts, in suits at common law, were directed to be the same as in the supreme courts of the States respectively. By the permanent Process Act of May 8, 1792 (1 Stat. at L. 275), it was enacted that the forms of writs, executions, and other process, and the forms and modes of proceeding, in suits at common law, should be the same as directed by the Act of 1789, subject to such alterations and additions as the said courts should deem expedient, or to such regulations as the Supreme Court of the United States should think proper by rule to prescribe to any circuit or district court. So that the practice in United States Courts, in the old States, was made to conform to the state practice, as it was in 1789, subject to alteration by rule of court. In 1828 a law was passed adopting for the federal courts in the new States, admitted since 1789, the forms of process and forms and modes of proceeding of the highest courts of those States respectively, as then existing, subject to alteration by the courts themselves or the Supreme Court of the United States. (4 Stat. at L. 278.) By the Act of August 1, 1842, the provisions of the Act of 1828 were extended to the States admitted in the intermediate time.

This review of the statute shows, that after 1792, it was always in the power of the courts, [304] by general rules, to adapt their practice to the exigencies and conditions of the times.

But the Statute of 1872 is peremptory, and whatever belongs to the three categories of practice, pleading, and forms and modes of proceeding, must conform to the state law and the practice of the state courts, except where Congress itself has legislated upon a particular subject and prescribed a rule. Then, of course, the Act of Congress is to be followed in preference to the laws of the State. With regard to the mode of serving mesne process upon corporations and other persons, Congress has not laid down any rule; and hence the state law and practice must be followed. There can be no doubt, we think, that the mode of service of process is within the categories named in the Act. It is part of the practice and mode of proceeding in a suit.

Assuming, therefore, that the question is one to be governed by the local or state law, we proceed to give an abstract of the charter of Watertown, and such other laws of Wisconsin as bear upon the subject. We find this mostly made to our hand in the brief of the plaintiffs in error, taken from the consolidated charter of 1865, and it is as follows:

Chapter 1, section 3. "The said city shall be divided into seven wards."

Section 4. "The corporate authority of said city shall be vested in one principal officer, styled the mayor, in one board of aldermen, consisting of two members from each ward, who, with the mayor, shall be denominated the common council. . . ."

Section 5. "The annual election for ward and city officers shall be held on the first Tuesday of April of each year. . . ."

Section 6. " . . . All elective officers, except . . . aldermen, shall, unless otherwise provided, hold their respective offices for one year and until their successors are elected and qualified."

Section 7. "In the event of a vacancy in the office of mayor, alderman, . . . the common council shall order a new election. . . ."

Chapter 2, section 2. "The mayor, when present, shall preside over the meetings of the [305] common council, and shall take care that the laws of the State and the ordinances of the city within the corporation are duly enforced and observed, and that all officers of the city discharge their respective duties. He shall appoint the police force. . . . He shall have a vote in case of a tie only. . . ."

Section 3. "At the first meeting of the common council in each year, or as soon thereafter as may be, they shall proceed to elect, by ballot, one of their number president; and in the absence of the mayor the said president shall preside over the meeting of the common council, and during the absence of the mayor from the city, or his inability from any cause to discharge the duties of his office, the president shall execute all the powers and discharge all the duties of mayor. In case the mayor and president shall be absent from any meeting of the common council, they shall proceed to elect

a temporary presiding officer, who for the time being shall discharge the duties of mayor. The president, or temporary presiding officer, while presiding over the council, or performing the duties of mayor, shall be styled 'acting mayor,' and acts performed by them shall have the same force and validity as if performed by the mayor."

Chapter 3, section 3. "The common council shall have the management and control of the finances and of all the property of the city, and shall likewise, in addition to the powers herein vested in them, have full power to make, enact, ordain, establish, publish, enforce, alter, modify, amend, and repeal all such ordinances, rules, and by-laws for the government and good order of the city, for the suppression of vice and immorality, for the prevention of crime, and for the benefit of trade, commerce, and health. . . ."

The common council is then given, in twenty-six sections, the usual powers which are commonly vested in the common councils of cities.

Chapter 5, section 1. " . . . All funds in the treasury . . . shall be under the control of the common council, and shall be drawn out upon the order of mayor and clerk, duly authorized by a vote of the common council. . . ."

[306] Chapter 7, section 2. "The common council shall by resolution levy such sum or sums of money as may be sufficient for the several purposes for which taxes are herein authorized to be levied. . . ."

Chapter 9, section 8. "When any suit or action shall be commenced against said city the service thereof may be made by leaving a copy of the process with the mayor."

Chapter 61 of the Private and Local Laws of Wisconsin for 1867 provides:

Section 1. "Section seven of the first chapter of said Act (an Act to incorporate the City of Watertown, and the several Acts amendatory thereof, chapter 233 of the General Laws of 1865) is hereby amended so that it shall read as follows:

"In the event of a vacancy in the office of mayor . . . by death, removal, or other disability, the common council shall order a new election. . . . In case of a vacancy in the office of alderman the mayor may order a new election. . . ."

" . . . Any city officer who shall resign his office shall file with the city clerk his resignation in writing, directed to the mayor, and such resignation shall take effect from the time of filing the same."

Chapter 204 of the Private and Local Laws of Wisconsin for 1871 provides:

Section 1. "The senior alderman of each ward of the City of Watertown shall constitute a board of street commissioners, who are hereby authorized, subject to the regulation and control of the common council, to audit and allow accounts against the city, . . . and when allowed, orders on the treasury shall issue therefor, and in case of vacancy in the office of mayor, and there is no president of the common council to act, said orders may be signed by the chairman of said board and the city clerk The city clerk shall be the clerk of said board, and shall keep record of its proceedings. The mayor may preside at the meetings of said board, and they may elect a chairman who shall preside in his absence. . . . Said board shall have all the powers conferred upon the common council by the city charter in relation to streets and bridges and sidewalks. . . . Said [307] board are also authorized to canvass the returns of all votes polled at the election for city or ward officers, and determine and declare the result of such election."

Section 2. "In case of vacancy in the office of alderman in any of the wards, the aldermen remaining in office shall have and exercise all the powers of street commissioners of the ward. The resignation of the mayor shall be in writing, directed to the common council or city clerk, and filed with the city clerk, and shall take effect at the time of filing the same."

Chapter 2, P. & L., 1872, amended said chapter as follows:

Section 1. "The board of street commissioners of the City of Watertown shall have all the powers conferred by law upon the common council of said city, in relation to public schools, the police, fire department, nuisances, the regulation of slaughter houses, and the public health, subject to the regulation and control of said common council. Provided that said board of street commissioners shall have no power of levying taxes for any purpose whatever."

Chapter 46, of Laws of Wisconsin for 1879, provides:

Section 2. "The board of street commissioners of said city, and the chairman of said board shall have concurrent power with the mayor and common council of said city, in the appointment of inspectors and clerks of election, and shall have all other powers conferred, by law, upon said mayor and common council, subject to the control of said common council, except the power of levying taxes, which they shall not have in any case whatever."

Section 3. "The common council of said city may, in its discretion, in any year, reduce the amount of city taxes levied under section three, of chapter two hundred and four of the Private and Local Laws of 1871, and cause a less sum than is levied under said section to be placed in the tax list for collection, for that year, for the several funds of the city."

By the Revised Statutes of Wisconsin of 1878 the manner prescribed by law for service of process on cities generally is, "by delivering a copy thereof to the mayor and city clerk." [308] (R. S. § 2637.) As there was a special law with regard to the City of Watertown contained in its charter, requiring a copy to be left with the mayor, the general law probably did not supersede it. But as the mayor must be served with process according to both laws, it can make no difference in the disposition of the case which is assumed to prevail.

We have given these quotations more fully because the plaintiffs in error seemed to regard them as having some importance in the consideration of the case.

The facts as disclosed by the record are briefly as follows:

On the 3d of March, 1873, the plaintiffs, by

their attorneys, sued out a summons against the defendant to answer a complaint for a certain money demand within twenty days after service of the summons. On the sixth of March, 1873, the marshal returned that he had that day served the summons on the city by delivering a copy of it to the city clerk and city treasurer. The defendant appeared specially by its attorney, and moved to set aside the said service on two grounds:

1st. That the summons was not served on the mayor of the city as required by its charter.

2d. That it was not served on three residents and freeholders of the city, as provided by the rules of the court.

Thereupon the plaintiff filed an affidavit of the marshal, stating that at the time of service of the summons there was no mayor or acting mayor of said city, and had been none since the 14th day of February, 1873 (the writ being dated and issued the third day of March, 1873). The defendant filed a counter affidavit of the city clerk, stating that he had examined the records of the city and the proceedings of the board of street commissioners for the months of January, February, March, and April, 1873, and from these it appeared that F. Kusel, mayor of the city, resigned the office of mayor on the 30th of January; that from thence to the 24th of February, street commissioner Maak was the chairman of the board of street commissioners and acting mayor of the city; that from the 24th of February to the 17th of March, street commissioner Prentice was temporary chairman of said board, and acting mayor; and that on the 6th and 8th of March, 1873, said Prentice was acting mayor.

[309] Upon these affidavits the court on the 8th of April, 1873, being of opinion that the summons had not been served upon the defendant in the manner prescribed by law, so as to give the court jurisdiction of the defendant, or so as to entertain any motion or proceedings in the case as against the defendant or on its behalf, unless it appeared, made an order authorizing the clerk to return the summons to the marshal, to be served on the defendant according to law, or for such further action as the defendant (meaning the plaintiffs) might direct conformably to law.

It does not appear from the record that anything further was done for nearly ten years. On the 23d of December, 1882, the marshal made return of service of said summons as follows:

"Served on the within named The City of Watertown by delivering to Wm. H. Rohr, last mayor of said city; Henry Bieber, city clerk; Chas. H. Gardner, city attorney, and Thomas Baxter, last presiding officer (or president or ch'm'n) of the board of street commissioners of said City of Watertown, each personally a copy of the within summons and by showing each of them this original summons this 23d day of December, 1882, the office of mayor of said city being vacant and there being no president of the common council or presiding officer thereof in office."

Thereupon, on June 19, 1883, plaintiffs filed their complaint setting out four bonds of $1,000 each, dated June 1, 1856, issued by the defendant to aid in the construction of the Watertown and Madison Railroad, and payable January 1, 1877, with eight per cent interest, payable semi-annually, upon presentation and surrender of the interest warrants or coupons attached to the bond; and setting forth, also, 84 of such coupons of $40 each, and demanding judgment for the amount of said coupons, $3,360, together with interest at seven per cent on the amount of each coupon from the time it became due.

On the same day, June 19, 1883, plaintiffs filed an affidavit of no answer or appearance, caused the amount due on the 84 coupons to be computed by the clerk, and thereupon the court [310] rendered judgment against the defendant by default for the amount so found due, to wit: $7,762.44 damages and $49.70 costs.

On the 27th day of July, 1883, the defendant appeared specially for the purpose, and served notice of motion to set aside the judgment and service, on the ground that there had been no service of summons and the court had no jurisdiction of defendant. The motion was based upon the affidavits of Henry Bieber, Thomas Baxter, and William H. Rohr, showing the following facts:

1. That William H. Rohr, designated in the marshal's return as the "last mayor of said city," was elected mayor at the annual municipal election, April 4, 1882, duly qualified and entered upon the duties of the office, and thereafter, on April 10, 1882, duly resigned the office in writing directed to the common council and filed his resignation with the city clerk, and had not since been mayor or acting mayor or president of the common council.

2. That Charles H. Gardner, named in the return, was never atttorney for defendant in this action, or authorized to appear or to accept, admit or receive service for it therein.

3. That Thomas Baxter, designated in the return as "last presiding officer (or president or ch'm'n) of the board of street commissioners of said city," was the senior alderman of the 3d ward, and as such a member of the board of street commissioners of the city, from April 10, 1882, to April 7, 1883.

That but one meeting of said board was held in November, 1882, and that was on November 11, 1882; that no mayor and no chairman elected by the board to preside at its meeting in the mayor's absence, being present, William F. Voss, senior alderman of the 6th ward, and a member of the board, was chosen by a *viva voce* vote of the members present chairman *pro tem.*, to preside at that particular meeting, which, after the transaction of its business, adjourned on said 11th of November, 1882.

That there were only three meetings of said board in December, 1882, to wit: regular meetings December 4th and 18th, and a special meeting December 27th; that there being no [311] mayor nor chairman elected by the board to preside at its meetings in the mayor's absence, present at either of said meetings of December 4th or 27th, said Baxter was chosen at each said meeting by a *viva voce* vote of the members present chairman *pro tem.* to preside at that particular meeting, and that said meetings adjourned *sine die* respectively on December 4th and 27th, after the transaction of their business, and that said Baxter ceased to be such temporary chairman after the adjournment of said meetings. That the meeting of December 18th,

being without a quorum, adjourned without the transaction of any business. And that no meeting of said board was held after December 27th until January 15th, 1883.

That besides said two meetings in December, said Baxter had alternated with other members of said board in being chosen in like manner and under like circumstances temporary chairman to preside at particular meetings of said board, but not at said meeting of December 18, and that said board never elected, chose or appointed him chairman thereof, or chairman to preside at its meetings in the mayor's absence, and that he never was such chairman or presiding officer, or anything more than merely chairman *pro tempore* of particular meetings as above.

4. That no copy of the summons had ever been delivered to the mayor of the city, and no summons in the action served on the city or mayor, or anything done toward service, except the delivery, December 23, 1882, of four copies, one each to the clerk, said Baxter, Gardner and Rohr, and delivery March 6, 1873, of a copy to Tanck and Meyer, neither of whom was mayor, acting mayor, or president of the common council.

The plaintiff submitted two affidavits of Mr. Winkler, by which it appears:

1. That the book in the city clerk's office containing the record of the proceedings of the common council and of the board of street commissioners for about five years before January, 1884, contains a record of the meeting of the common council, April 11, 1882, the last entry of which is, "The common council adjourned *sine die*," and that there is no further [312] record of a common council meeting thereafter until after the municipal election in April, 1883, and that immediately following said record commences the record of a meeting of the board of street commissioners, April 11, 1882, which is followed by the record of other meetings of the board up to December 27, 1882, at each of which meetings some member of the board, either Com. Stacey, Com. Baxter or Com. Vose was chosen chairman *pro tem.*, and the record of the adjournment of each meeting is, "On motion the board adjourned," and at one of such meetings a resolution was passed retaining Mr. Daniel Hill "to assist the city attorney in the suits commenced by E. Mariner."

2. That accounts were audited at said meetings and orders upon the city treasurer drawn therefor on a subsequent day and signed by the commissioner who had been chosen chairman *pro tem.* at the meeting auditing the accounts, and that the common practice had been to hold meetings of the board evenings, prepare the orders on a subsequent day, but bearing the date of the meeting, and they were then signed by the city clerk and chairman *pro tem.* chosen at such meeting.

3. That the city clerk said that every alternate Monday had always, for a series of years, been the regular time for meetings of the common council, if there was one, and of the board of street commissioners if there was none.

4. The affiant states further, upon information and belief, that for some years prior to 1879 and since, it has been the constant practice for the common council to hold one meeting after the election of aldermen, in April each year, and then all but the senior aldermen constituting the board of street commissioners, would resign, and the mayor would also resign at the same time.

On the hearing of the motion, May 16, 1884, the court made an order setting aside the judgment "on the ground that the summons herein was not properly served on said defendant, and the court had no jurisdiction thereof." To review the decision of the court in making that order the plaintiffs in error have sued out the present writ of error.

The errors assigned are— [313]

1. That the court had no jurisdiction or power to vacate the judgment at a subsequent term.

2. That the return of the marshal showed a valid service which was not changed by the affidavits.

We have no difficulty with regard to the first question raised by the plaintiffs in error. It is clear from the record that the application to set aside the judgment was made at the same term it was rendered. The judgment was entered on the 19th day of June, 1883. During the same term, as we infer (and it is not disputed), namely, on the 27th of July, 1883, the defendant's attorneys gave notice of a motion to set aside the judgment, to be heard on the 28th of August, and annexed to the notice the affidavits on which they relied. Service of this notice and of the affidavits was acknowledged by the attorneys of the plaintiffs without objection. Why the motion was not argued on the 28th of August is not shown. It was probably postponed by agreement of the parties, or at the suggestion of the court. It did not actually take place until May, 1884, during the contin ance of the December Special Term of 1883. The District Judge certifies that by agreement of counsel and the consent of the court, it was then heard, together with a similar motion in the case of *Worts and others* v. *The City of Watertown*, some of the affidavits being used in both cases. From what appears on the face of the record it is to be presumed that the hearing of the motion was continued by consent, or by direction of the court, from the 28th of August until the following term, which was the December Special Term. The objection, therefore, of want of jurisdiction to set aside the judgment on account of lapse of time is without foundation in fact.

As we have stated, the main question is, whether there was legal service of process on the city. We may dismiss the attempt at service in March, 1873. It was set aside by the court as not made in the manner prescribed by law so as to give the court jurisdiction; and the prosecution was dropped by the plaintiffs. No further steps were taken until after the lapse of nine years and nine months, when a second effort was made to serve the writ, upon which [314] the present proceedings arose. It cannot be pretended that the action was pending during that long period, without further effort to procure a service of process. The common law provided a remedy in such cases, by a return of *non est inventus* (or what was equivalent thereto), and a reissue of the writ from term to term, until a service could be made, or by process of outlawry. The issue of successive writs kept the suit alive so as to prevent the running

of the Statute of Limitations. But the making of one spasmodic and unsuccessful effort, and then abandoning the case for ten years, cannot be regarded as having any such effect, unless aided by some statutory provision. No such provision has been cited. There is a provision in the Revised Statutes of Wisconsin (§ 4240) which was evidently intended to meet such a case; but no attempt was made to comply with it. The section referred to is substantially as follows: "An attempt to commence an action shall be deemed equivalent to commencement thereof . . . when the summons is delivered with the intent that it shall be actually served; . . . if a corporation organized under the laws of this State be defendant, to the sheriff or proper officer of the county in which it shall be established by law, or where its general business is transacted, or where it keeps an office for the transaction of business, or where any officer, attorney, agent or other person upon whom the summons may by law be served, resides or has his office; or if such corporation has no such place of business or any officer or other person upon whom the summons may by law be served, known to the plaintiff, . . . to the sheriff or other proper officer of the county in which plaintiff shall bring his action. But such an attempt must be followed by the first publication of the summons, or the service thereof within sixty days."

As the attempted service of the summons in 1878 can have no effect upon the solution of the present controversy, the question then arises whether the attempted service in December, 1882, was a sufficient and legal service. The court below held that it was not. We have already quoted the return of the marshal on that occasion. It appears from this return that he made the attempted service by delivering a copy of the summons to Wm. H. Rohr, the last mayor of the city, a copy to Henry Bieber, city clerk, a copy to Chas. H. Gardner, city attorney, and a copy to Thomas Baxter, the last presiding officer of the board of street commissioners of the City of Watertown, the office of mayor being vacant and there being no president of the common council nor presiding officer thereof in office. Was this such a service upon the city as the law requires? It clearly was not, unless, by the law of Wisconsin, the circumstances of the case were such as to dispense with a literal compliance with the charter. The charter requires service on the mayor of the city. No such service was made. There was no mayor in office at the time. The last mayor had resigned, and his resignation had taken effect. Service on him was of no more avail than service on an entire stranger. The case is different from those in which we have held that a resignation of an officer did not take effect until it was accepted or until another was appointed. In those cases either the common law prevailed or the local law provided for the case and prevented a vacancy. Such were the cases of *Badger* v. *U. S. ex rel. Bolles*, 93 U. S. 599 [23: 991]; *Edwards* v. *United States*, 103 U. S. 471 [26: 314]; *Salamanca Twp.* v. *Wilson*, 109 U. S. 627 [27: 1055]. In *Badger* v. *U. S. ex rel. Bolles* the law of Illinois was in question, and it appeared that by the Constitution of that State the officers elected were to hold their offices until their successors were elected and qualified. In *Edwards* v. *United States* the case arose in Michigan, and it was held that the common-law rule prevailed there, by which the resignation of a public officer is not complete until the proper authority accepts it or does something tantamount thereto, such as appointing a successor. In *Salamanca Twp.* v. *Wilson*, a case arising in Kansas, the treasurer of a township moved across the township line into another township. By the Constitution of Kansas township officers were to hold their offices one year from their election and until their successors were qualified, and nothing was said either in the Constitution or laws about residence or nonresidence. We held that the removal did not necessarily vacate the office and that service of summons on the treasurer was good.

[315]

In the present case, it is true, the consolidated charter of the City of Watertown provides (chap. 1, § 6) that "All elective officers except aldermen shall, unless otherwise provided, hold their respective offices for one year, and until their successors are elected and qualified." But that provision has respect to ordinary cases. It cannot apply in a case of death; and does not apply in case of resignation; for by chapter 61 of the private and local laws of 1867, relating to Watertown (§ 1), it is declared that "Any city officer who shall resign his office shall file with the city clerk his resignation in writing, directed to the mayor, and such resignation shall take effect from the time of filing the same." And by chapter 204 of the private and local laws of 1871, relating to Watertown, it is declared (§ 2) that "The resignation of the mayor shall be in writing, directed to the common council or city clerk, and filed with the city clerk, and shall take effect at the time of filing the same." These provisions of the statute law are decisive, and preclude the operation of any such rule as was recognized in *Badger* v. *U. S. ex rel. Bolles* and *Edwards* v. *United States*. The service upon Rohr, the last mayor, therefore, was of no force, and had no effect whatever. The same thing may be said of the service on Baxter, the last presiding officer of the board of street commissioners.

[316]

The question, then, is reduced to this: whether, in case the mayor has resigned and there is no presiding officer of the board of street commissioners (a body which seems to take the place of the common council of the city for many purposes), service of process on the city clerk and on a conspicuous member of the board is sufficient. If the common law (which is common reason in matters of justice) were permitted to prevail there would be no difficulty. In the absence of any head officer, the court could direct service to be made on such official persons as it might deem sufficient. But when a statute intervenes and displaces the common law, we are brought to a question of words and are bound to take the words of the statute as law. The cases are numerous which decide that where a particular method of serving process is pointed out by statute, that method must be followed, and the rule is especially exacting in reference to corporations. *Kibbe* v. *Benson*, 84 U. S. 17 Wall. 624 [21: 741]; *Alexandria* v. *Fairfax*, 95 U. S. 774 [24: 583]; *Settlemier* v. *Sullivan*, 97 U. S. 444 [24: 1110]; *Evans* v. *Dublin & D. R. Co.* 14 Mees. & W.

[317]

142; *Walton* v. *Universal Salvage Co.* 16 Mees. & W. 438; *Brydolf* v. *Wolf*, 32 Iowa, 509; *Hoen* v. *Atlantic & P. R. Co.* 64 Mo. 561; *Lehigh Valley Ins. Co.* v. *Fuller*, 81 Pa. 398. The courts of Wisconsin strictly adhere to this rule. *Congar* v. *Galena & C. U. R. Co.* 17 Wis. 478, 485; *Watertown* v. *Robinson*, 59 Wis. 513; *Watertown* v. *Robinson*, 69 Wis. 230. The two cases last cited related to the charter now under consideration. In the first case, service was made upon the city clerk and upon the chairman of the board of street commissioners whilst the board was in session, in the absence of the mayor, who could not be found after diligent search. The court, after referring to the provisions of the charter and the Revised Statutes on the subject, say: "The question whether the Revised Statutes control as to the manner of service is not a material inquiry here, because both the charter and general provision require the service to be made upon the mayor, but no service was made upon that officer, as appears by the return of the sheriff. The principle is too elementary to need discussion that a court can only acquire jurisdiction of a party, where there is no appearance, by the service of process in the manner prescribed by law." In the last case (decided in 1887) service was made in the same manner as in the previous one, and the court say: "When the statute prescribes a particular mode of service, that mode must be followed. *Ita lex scripta est.* There is no chance to speculate whether some other mode will not answer as well. This has been too often held by this court to require further citations. . . . When the statute designates a particular officer to whom the process may be delivered and with whom it may be left, as service upon the corporation, no other officer or person can be substituted in his place. The designation of one particular officer upon whom service may be made excludes all others. The temporary inconvenience arising from a vacancy in the office of mayor affords no good reason for a substitution of some other officer in his place, upon whom service could be made, by unwarrantable construction not contemplated by the statute."

[318]

It is unnecessary to look farther to see what the law of Wisconsin is on this subject. It is perfectly clear that by that law the service of process in the present case was ineffective and void.

The counsel for the plaintiff in error endeavor to avoid this conclusion by referring to the Act of 1879, which declares that "The board of street commissioners of said city and the chairman of said board shall have concurrent power with the mayor and common council of said city in the appointment of inspectors and clerks of election, and shall have all other powers conferred by law upon said mayor and common council, subject to the control of said common council, except the power of levying taxes." It is contended that this Act gives to the chairman of the board of street commissioners the same power as the mayor has to receive service of process against the city. But the Supreme Court of Wisconsin, as we have seen, has expressly decided otherwise. And the language of the Act of 1879 is not that the chairman of the board shall have the power of the mayor, but that the board and the chairman shall have concurrent power with the mayor and common council,—evidently referring to the power of the body, not to the separate power of the officers. Besides, if it were conceded that the chairman of the board had the same power as the mayor, Baxter, who was served with process as chairman of the board, was not permanent chairman, but was only temporary chairman of the particular meeting, and ceased to have any official position as such after the meeting adjourned. He was in no sense chairman of the board at the time when he was served with process. This fact, however, does not seem material in the view of the Supreme Court of Wisconsin; for in the cases before it, the chairman of the board was served with process during its actual session and whilst he was presiding. In the construction of a state statute, in a matter purely domestic (as this is), we always feel strongly disposed to give great weight to the decisions of the highest tribunal of the State. *Burgess* v. *Seligman*, 107 U. S. 20 [27: 359].

[319]

There is a question entirely outside of the one which we have been discussing: it is, whether the state law, as thus ascertained, is objectionable on the score of being repugnant to the Constitution of the United States. Does it impose embarrassments in the way of the creditor in pursuit of his claim which did not exist when his debt was created? The point is not distinctly made by the counsel of the plaintiffs in error, although it is hinted at in their brief. But no statute has been pointed out to us showing any change in the law of the State in this regard. As the record stands, we have no sufficient ground for discussing the question in the present case.

With motives we have nothing to do. Certainly, improper motives cannot be attributed to a State Legislature in the passage of any laws for the government of the State. Individuals may be actuated by improper motives, and may take advantage of defects and imperfections of the law for the purpose of defeating justice. The mayor of Watertown may have been actuated by such a motive in resigning his office immediately after being inducted into it. But he had a legal right to resign; and if the plaintiffs are prejudiced by his action, it is *damnum absque injuria*. The plaintiffs are in no worse case than were the creditors of the City of Memphis after the repeal of its charter and the establishment of a taxing district in its stead. The State has plenary power over its municipal corporations, to change their organization, to modify their method of internal government, or to abolish them altogether. Contracts entered into with them by private parties cannot deprive the State of this paramount authority. See *Meriwether* v. *Garrett*, 102 U. S. 472 [26: 197].

The cases of *Broughton* v. *Pensacola*, 93 U. S. 266 [23: 896], and *Mobile* v. *Watson*, 116 U. S. 289 [29: 620], cannot aid the plaintiffs in this case. Those were cases in which a new name was given to an old corporation, or a new corporation was made out of an old one,—that was the substance of it,—and the question was whether the new corporation or the old corporation by its new name was liable for the old debts; and we held that it was. That was a question of liability, not a question of pro-

cedure. There the way was open for looking
[320] into the actual relations of the old and new corporations, and deciding according to the justice of the case. Here we are bound by statute; and not by the state statute alone, but by the Act of Congress, which obliges us to follow the state statute and state practice. The federal courts are bound hand and foot, and are compelled and obliged by the Federal Legislature to obey the state law; and according to this law *the judgment of the Circuit Court was correct and is therefore affirmed.*

---

[320] HENRY AMY ET AL., *Plffs. in Er.*,
v.
THE CITY OF WATERTOWN. (No. 2.)

(See S. C. Reporter's ed. 320-327.)

Conspiracy to prevent service of process on a city —Statute of Limitations not extended—evasion of service is not fraud.

1. A conspiracy of the officials and residents of a city, to prevent service of process upon it, by the resignation of the mayor, and by the secret meeting of the common council before qualifying and organizing, and by their immediately resigning their offices after the transaction of some necessary business, and the consequent inability to serve such process, does not furnish an excuse for not commencing the action within the time limited by law.
2. The courts cannot create an exception to the operation of the Statute of Limitations, not made by the statute itself, where the party designedly eludes the service of process.
3. Although concealment of fraud has been held ground for suspending the Statute of Limitations, yet the evasion of service of process is not fraud in the legal sense of the term, and is no valid answer to the statutory bar.

[No. 197.]

Argued March 12, 1889. Decided April 8, 1889.

IN ERROR to the Circuit Court of the United States for the Western District of Wisconsin, to review a judgment for the defendant on the defense of the Statute of Limitations. *Affirmed.*

The facts are stated in the opinion.

Mr. **George P. Miller,** for plaintiffs in error:

The bar of the Statute of Limitations may be avoided at law for fraud in the party seeking to take advantage of it.

Sherwood v. *Sutton*, 5 Mason, 143; *Bree* v. *Holbech*, 2 Doug. (Eng.) 655; *Jones* v. *Conoway*, 4 Yeates, 109; *Persons* v. *Jones*, 12 Ga. 371; *First Mass. Turnpike Corp.* v. *Field*, 3 Mass. 201; *Homer* v. *Fish*, 1 Pick. 435; *Welles* v. *Fish*, 3 Pick. 74; *Farnam* v. *Brooks*, 9 Pick. 212, 246, *Bishop* v. *Little*, 3 Me. 405; *Cole* v. *McGlathry*, 9 Me. 131; *Bricker* v. *Lightner*, 40 Pa. 199; *Bicknell* v. *Gough*, 3 Atk. 558; *Carlisle* v. *Foster*, 10 Ohio St. 198; *Conyers* v. *Kenan*, 4 Ga. 308.

The Statutes of Limitations of the several States did not run against the right of action of parties during the continuance of the civil war.

The Protector, 76 U. S. 9 Wall. 687 (19: 812); *S. C.* 79 U. S. 12 Wall. 700 (20: 463); *Levy* v. *Stewart*, 78 U. S. 11 Wall. 244 (20: 86); *U. S.* v. *Wiley*, 78 U. S. 11 Wall. 508 (20: 211); *Brown* v. *Hiatts*, 82 U. S. 15 Wall. 177 (21: 128); *Batesville Institute* v. *Kauffman*, 85 U. S. 18 Wall. 152 (21: 775); *Ross* v. *Jones*, 89 U. S. 22 Wall. 576 (22: 730).

The Statute of Limitations applies to nonresidents as well as residents.

Ruggles v. *Keeler*, 3 Johns. 263; *Fowler* v. *Hunt*, 10 Johns. 464; *Milton* v. *Babson*, 6 Allen, 322-324; *Whitcomb* v. *Keator*, 59 Wis. 609; *Parker* v. *Kelly*, 61 Wis. 552.

Courts hold the statute as suspended unless the absent debtor leaves such a residence within the State so that process can be served upon him by leaving the process at his residence.

Hackett v. *Kendall*, 23 Vt. 275; *Ward* v. *Cole*, 32 N. H. 452; *Penley* v. *Waterhouse*, 1 Iowa, 498.

Courts of equity enjoin the party who had procured injunction from setting up the Statute of Limitations.

Barker v. *Millard*, 16 Wend. 572; *Robertson* v. *Alford*, 13 Smedes & M. 509; *Ingraham* v. *Regan*, 23 Miss. 213; *Rice* v. *Lowan*, 2 Bibb (Ky.) 149; *Doughty* v. *Doughty*, 10 N. J. Eq. 347; *Chemical Nat. Bank* v. *Kinsane*, 32 Fed. Rep. 429; *Norris* v. *Haggin*, 28 Fed. Rep. 282; Wood, Lim. par. 243; *Jackson* v. *Huntley*, 5 Johns. 65; *Jackson* v. *McKee*, 8 Johns. 429.

The period during which the commencement of suits was prohibited should not be included in the calculation.

Dowell v. *Webber*, 2 Smedes & M. 452; *Moses* v. *Jones*, 2 Nott & McC. 259.

The commencement of the action having been stayed by a statutory prohibition, the time of the continuance of the prohibition is not a part of the time limited for the commencement of the action.

Hopkirk v. *Bell*, 7 U. S. 3 Cranch, 454 (2: 497); *Montgomery* v. *Hernandez*, 25 U. S. 12 Wheat. 129 (6: 575); *Braun* v. *Sauerwein*, 77 U. S. 10 Wall. 218 (19: 895).

The defendant City of Watertown is estopped by its own conduct from taking advantage of the Statute of Limitations.

Randon v. *Toby*, 52 U. S. 11 How. 517 (13: 784); *Killips* v. *Putnam F. Ins. Co.* 28 Wis. 472.

Messrs. **George W. Bird** and **Daniel Hall,** for defendant in error.

Unless there can be found in the statute itself some ground for restraining it, it cannot be restrained by arbitrary addition or retrenchment. No exception can be claimed in favor of particular persons or cases unless they are expressly mentioned.

Angell, Lim. §§ 194, 476, 485, *et seq.*; Wood, Lim. § 252, p. 495; *Duplex* v. *De Roven*, 2 Vern. 540; *Hall* v. *Wybourn*, 2 Salk. 420; *Beckford* v. *Wade*, 17 Ves. Jr. 87; *McIver* v. *Ragan*, 15 U. S. 2 Wheat. 25 (4: 175); *Bank of Ala.* v. *Dalton*, 50 U. S. 9 How. 522 (13: 242).

The Legislature having made no exception, the court can make none.

Kendall v. *U. S.* 107 U. S. 123 (27: 437); *Leffingwell* v. *Warren*, 67 U. S. 2 Black, 599 (17: 261); *Fisher* v. *Harnden*, 1 Paine, C. C. 61; *U. S.* v. *Muhlenbrink*, 1 Woods, 569; *The Sam Slick*, 2 Curt. 480.

The principle is not modified by the fact that the exception sought to be introduced into the statute, is the fraud of the party setting up and relying on the bar.

Hunter v. *Gibbons*, 1 Hurl. & N. 459; *Brown* v. *Howard*, 4 Moore, 508; *Bowman* v. *Wathen*, 42 U. S. 1 How. 189 (11: 97); *Wood* v. *Carpenter*, 101 U. S. 135 (25: 807); *Andreae* v. *Redfield*, 98 U. S. 225 (25: 158); *Gaines* v. *Miller*,

111 U. S. 395 (28: 466); *U. S.* v. *Maillard*, 4 Ben. 459; *Peck* v. *Buck*, 3 Baxt. 71; *Miles* v. *Berry*, 1 Hill (S. C.) 296; *Miller* v. *Lesser*, 71 Iowa, 147; *Conner* v. *Goodman*, 104 Ill. 365; *Troup* v. *Smith*, 20 Johns. 33; *Leonard* v. *Pitney*, 5 Wend. 30; *Allen* v. *Mille*, 17 Wend. 202; *Humbert* v. *Trinity Church*, 24 Wend. 587; *Demarest* v. *Wynkoop*, 3 Johns. Ch. 129; *Sacia* v. *De Graaf*, 1 Cow. 356; *Bucklin* v. *Ford*, 5 Barb. 393.

The Statute of Limitations of Wisconsin, as it first appeared in the Territorial Revision of 1839, and the Revision of 1849 was taken from the statutes of New York. The courts of New York had placed a settled construction upon it to the effect we here contend for.

When Wisconsin adopted the statute from New York, it adopted with it the construction the New York courts had put upon it.

Swearingen v. *Robertson*, 39 Wis. 462; *Draper* v. *Emerson*, 22 Wis. 147; *Dutcher* v. *Dutcher*, 39 Wis. 651; *McDonald* v *Hovey*, 110 U. S. 619 (28: 269).

The construction thus placed upon the Statute of Limitations of the State will be followed.

Green v. *Neal*, 31 U. S. 6 Pet. 291 (8: 402); *Harpending* v. *Reformed Prot. Dutch Church*, 41 U. S. 16 Pet. 455 (10: 1029); *Leffingwell* v. *Warren*, 67 U. S. 2 Black, 599 (17: 261); *McCluny* v. *Silliman*, 28 U. S. 3 Pet. 270 (7: 676); *Ross* v. *Duval*, 38 U. S. 13 Pet. 45 (10: 51); *Bank of Ala.* v. *Dalton*, 50 U. S. 9 How. 522 (13: 242); *Wayman* v. *Southard*, 23 U. S. 10 Wheat. 1 (6: 253); *Tioga R. Co.* v. *Blossburg & C. R. Co.* 87 U. S. 20 Wall. 137 (22: 331).

Where the statute has once commenced to run, no subsequent disability will interrupt or suspend its running.

Angell, Lim. §§ 196, 477-479; *Mercer* v. *Selden*, 42 U. S. 1 How. 37 (11: 38); *Hogan* v. *Kurtz*, 94 U. S. 773 (24: 317); *McDonald* v. *Hovey*, 110 U. S. 619 (28: 269).

Mr. Justice **Bradley** delivered the opinion of the court:

This is an action for a money demand brought by the plaintiffs in error against the defendant, the City of Watertown. [321] A summons was sued out against the city on the 19th of June, 1883, and served by the marshal on the 26th of the same month by delivering a copy to the city clerk, the city attorney, and to the last elected chairman of the board of street commissioners. Appearance to the action was entered by the attorneys of the city, and a copy of the complaint was demanded. The complaint was duly filed, and set forth the issue by the city of three bonds for one thousand dollars each, bearing date respectively the first day of June, 1856, and payable on the first day of January, 1877, with interest thereon at the rate of eight per cent per annum, payable semi-annually, and with coupons annexed, to represent the successive installments of interest. The plaintiff prayed judgment for the amount of said bonds and of the last ten coupons on each. The defendant, in its answer, set up as a defense that the several causes of action did not, nor did either of them, accrue within six years next before the commencement of the action; that being the time within which actions upon bonds and coupons must be commenced in the State of Wisconsin. To this answer the plaintiffs replied (by way of an amendment to their complaint) as follows:

"Said plaintiffs allege, on information and belief, that the said defendant, the City of Watertown, and the officers, agents, and citizens and residents of said city did, subsequent to the first day of March, A. D. 1873, conspire together, and with each other, and ever since have conspired together, and with each other, for the purpose and with the preconceived intent and design to defraud these plaintiffs and all other owners and holders of the bonds and coupons to such bonds issued by said city, and to prevent these plaintiffs and other holders and owners of said bonds and coupons from obtaining the service of process on said city.

"Said plaintiffs further allege, on information and belief, that each year since the first day of March, 1873, a mayor of said city was elected, as required by law, but said mayor each year, with the intent and design as aforesaid, qualified as hereinafter mentioned and and immediately thereafter placed his resignation in the hands of the city clerk of said city, to be filed by him in case of emergency, and to [322] take effect accordingly.

"Said plaintiffs further allege, on information and belief, that each year since the first day of March, 1873, after the mayor and members of the common council had been elected, they and each of them failed to qualify until they had assembled together in a secret place with locked doors, unknown to the people at large and to these plaintiffs, and with persons on watch to inform them of the approach of any person or persons, and then and there, if unmolested, the mayor and the members of the common council, qualified as required by law, transacted for said defendant city certain necessary business, and thereafter immediately filed with the city clerk of said city their respective resignations, to take effect immediately, and which resignations went immediately into effect.

"Said plaintiffs further allege that since the first day of March, 1873, they have employed attorneys and agents for the purpose of ascertaining who was the mayor or acting mayor or chairman of the common council or chairman of the board of street commissioners and for the purpose of having process served on said city; but owing to said conspiracy, as these plaintiffs are informed and believe, since the first day of March, 1873, there has been no mayor of said city except each year for a few hours at such secret and concealed meetings, and the common council of said city, with the said fraudulent intent and design, has failed each year to elect a chairman of said common council, and since said last mentioned date there has been no person who was acting mayor, and no chairman of the board of street commissioners.

"Said plaintiffs further allege that, notwithstanding they have used due diligence and have hired attorneys and agents for the purpose of having process served on said city, they have been unable to this date to serve or have served the summons in this action on the mayor of said city or on that person who by law should exercise the functions of mayor of said city."

The defendants thereupon filed an amended answer, again setting up the Statute of Limita-

[323] tions, and averring that the plaintiffs did not commence, or attempt to commence, said action, or use any diligence whatever to commence the same, before the 19th of June, 1883.

To this answer the plaintiffs demurred, and the court below overruled the demurrer and allowed the plaintiffs twenty days to file such further pleadings as they might deem proper. As the plaintiffs failed to plead further, judgment was entered for the defendant. To this judgment the present writ of error is brought.

It will be observed that the plaintiffs do not pretend that they commenced the action within the legal period of six years after the several causes of action accrued; and their excuse for not doing so is, that it would have been of no use, on account of the alleged conspiracy of the officials and residents of Watertown to prevent a service of process, by the resignation of the mayor, and by the secret meeting of the common council before qualifying and organizing, and by their immediately resigning their offices after the transaction of some necessary business.

The question is, whether such proceedings on the part of the city officials furnish an excuse for not commencing the action within the time limited by law? The statute itself specifies several exceptions to its operation, as (1st), when the defendant is out of the State; (2d) when he is an alien subject or a citizen of a country at war with the United States; (3d) when the person entitled to bring the action is insane, or under age, or imprisoned on a criminal charge; (4th) when the commencement of an action has been stayed by injunction or statutory prohibition; (5th) where the action is for relief on the ground of fraud, the statute does not begin to run until the discovery by the party aggrieved of the facts constituting the fraud. The question, therefore, is, whether the courts can create another exception, not made by the statute, where the party designedly eludes the service of process? Have the courts the power thus to add to the exceptions created by the statute? That is the precise question in this case.

It is said by *Mr. Justice* Strong, in *Braun* v. *Sauerwein*, 77 U. S. 10 Wall. 218, 223 [19:895, 897], "It seems, therefore, to be established, that the running of a Statute of Limitation may [324] be suspended by causes not mentioned in the statute itself." The observation is undoubtedly correct; but the cases in which it applies are very limited in character, and are to be admitted with great caution; otherwise the court would make the law instead of administering it. The general rule is that the language of the Act must prevail, and no reasons based on apparent inconvenience or hardship can justify a departure from it.

The courts of equity, however, from an early day, held that where one person has been injured by the fraud of another, and the facts constituting such fraud do not come to the knowledge of the person injured until some time afterward, the statute will not commence to run until the discovery of those facts, or until by reasonable diligence they might have been discovered. *Booth* v. *Warrington*, 4 Brown P. C. ed. Tom. 168; *South Sea Co.* v. *Wymondsell*, 3 P. Wms. 143; *Hovenden* v. *Id. Annesley*, 2 Sch. & Lef. 607, 631, etc.; *Blennerhassett* v. *Day*, 2 Ball & B. 104, 129; Mitf. Ch. Pl. ed. Jeremy, 269; Blanshard, Lim. 81; Wood, Lim. § 58, p. 114, § 274, p. 586; Angell, Lim. c. 18, 2d ed. p. 188. A *dictum* of *Lord* Mansfield in *Bree* v. *Holbech*, 2 Doug. 655, 656, that "There may be cases which fraud will take out of the Statute of Limitations," raised the question whether undiscovered fraud might not be set up by way of replication to a plea of the statute in actions at law. Wilkinson, Lim. 115. But this suggestion never obtained the force of law in the English courts. *Brown* v. *Howard*, 2 Brod. & Bing. 73; *Imperial Gaslight & C. Co.* v. *London Gaslight Co.* 10 Exch. 39, 42, 45; *Hunter* v. *Gibbons*, 1 Hurl. & N. 459, 464. *Vice-Chancellor* Wigram granted relief in equity in the case of *Blair* v. *Bromley*, 5 Hare, 542, on the express ground that the acts of fraud were not discovered till within six years of bringing the suit, and that the remedy at law was gone; and his decree was affirmed by *Lord* Cottenham. 2 Phill. Ch. 354.

In this country, however, in many of the States, especially in those States which never had a separate system of equity, the statute has been held not to run, in cases of fraud, until the discovery of the facts constituting the fraud; whilst in other States, in the absence of a statutory provision on the subject, the English doctrine has been adhered to. See Angell, Lim. chap. XVIII; and Wood, Lim. § 58. In most of the States, however, statutes have finally been passed, suspending the statute in cases of fraud until the facts have been discovered, or might have been discovered by reasonable diligence. See the various statutes referred to in Wood, Lim. chap. XXII.

From this brief review it appears that concealment of fraud has by many courts been considered good ground for suspending the Statute of Limitations, even in actions at law. But this is a very different thing from attempting to avoid service of process, and cannot be cited as aiding in any way the adoption of such a rule in the latter case. Concealment of fraud prevents a party from knowing that he has been injured and has a cause of action. He cannot take any steps to obtain redress. But when a party knows that he has a cause of action, it is his own fault if he does not avail himself of those means which the law provides for prosecuting his claim, or instituting such proceedings as the law regards sufficient to preserve it.

There is one class of cases which is excluded from the operation of the Statute by act of law itself, of which the case in which *Mr. Justice* Strong made the remark referred to is one: This class embraces those cases in which no action can be brought at all, either for want of parties capable of suing, or because the law prohibits the bringing of an action. In such cases the general law operates as a qualification, or tacit condition of the particular statute. Thus, if a man dies after commencing an action, and it abates by his death, and the limitation of time for bringing another action expires before the appointment of an executor or administrator,—the courts have held, that as there is no person to bring suit, the statute is suspended for a reasonable period, in order to give an opportunity to those interested to have the proper representative appointed. Blanshard, Lim. pp.

104-112; Wood, Lim. 11, n. 4. So where a citizen of one country has a cause of action against a person who resides in another country at war with his own, the Law of Nations forbids any intercourse between them, and suspends all suits and actions by the one against the other; and, therefore, the time, during which the right to sue is thus suspended, is not reckoned as any part of the time given by the Statute of Limitations for bringing an action. *Hanger* v. *Abbott*, 78 U. S. 6 Wall. 532 [18:939]; *The Protector*, 76 U. S. 9 Wall. 687 [19:812]; Wood, Lim. 9, 10. Besides this general exception created by Act of law, it is difficult to find any other ground or cause for suspending the operation of the statute not specified in the Act itself.

[326]

The answer made by the plaintiffs to the plea of the statute amounts to nothing more than an allegation that the defendant, the City of Watertown, by the acts of its officers, seeks to evade the service of process. Their language is, that the officers and people have conspired together for the purpose of defrauding the plaintiffs, and to prevent them from obtaining service of process. Is it fraud in a debtor to endeavor to evade the service of process? Is it any more fraudulent than it is not to pay the debt? Fraud is not the proper term to apply to such conduct. It may be morally wrong. It may be dishonest; but it is not fraudulent in the legal sense of the term.

Inability to serve process on a defendant has never been deemed an excuse for not commencing an action within the prescribed period. The Statute of James made no exception to its own operation in case where the defendant departed out of the realm, and could not be served with process. Hence the courts held that absence from the realm did not prevent the statute from running. Wilkinson, Lim. 40; *Hall* v. *Wyborn*, 1 Shower, 98. This difficulty was remedied by the Act of 4 and 5 Anne, c. 16, § 19, which declares that if any person against whom there shall be any cause of action be at the time of such action accrued beyond the seas, the action may be brought against him after his return, within the time limited for bringing such actions. Most of the States have similar Acts. The statute of Wisconsin, as we have seen, has a similar provision; perhaps wider in its scope. That statute, therefore, has expressly provided for the case of inability to serve process occasioned by the defendant's absence from the State. It has provided for no other case of inability to make service. If this is an omission, the courts cannot supply it. That is for the Legislature to do. Mere effort on the part of the defendant to evade service surely cannot be a valid answer to the statutory bar. The plaintiff must sue out his process and take those steps which the law provides for commencing an action and keeping it alive.

[327]

The judgment of the Circuit Court must be affirmed.

The case of *Rufus P. Spalding, Samuel H. Allen, and others* v. *The City of Watertown* (No. 201.), is precisely like the one just considered, and *judgment of affirmance must be rendered in that also.*

EDWIN F. KNOWLTON, Individually and as Exr., *Plf. in Err.*,
v.
THE CITY OF WATERTOWN. [327]

(See S. C. Reporter's ed. 327-334.)

Wisconsin law as to commencement of suit—Statute of Limitations.

1. By the laws of Wisconsin, an action is not commenced, for the purpose of stopping the running of the Statute of Limitations, until service of process has been effected, or until service has been attempted and followed up by actual service within sixty days or publication within that time.

2. As the summons in this case was never served upon the mayor of the City of Watertown or upon any person having or exercising the powers of mayor, and there is no pretense that the directions of section 4240 of the Revised Statutes of Wisconsin, concerning the commencement of an action, were followed, or attempted to be, the action was really not commenced within the meaning of the statute until the attorneys of the defendant voluntarily entered a general appearance and as, at that time, more than ten years and a half had elapsed since the last coupon sued on became due, all the coupons sued on were barred by the Statute of Limitations.

[No. 198.]

Argued March 13, 1889. Decided April 8, 1889.

IN ERROR to the Circuit Court of the United States for the Western District of Wisconsin, to review a judgment for the defendant in a suit to recover the amount of municipal bonds. *Affirmed.*

The facts are stated in the opinion.

Mr. **George P. Miller**, for plaintiff in error:

The points and authorities of the counsel for plaintiff in error are stated in the preceding case of *Amy* v. *Watertown*, with which this case was argued.

Messrs. **Geo. W. Bird** and **Daniel Hall**, for defendant in error;

The attempted service on the 23d day of December, 1882, was absolutely void. At that time Mr. Carpenter, one of the plaintiffs in that summons was dead.

Downer v. *Howard*, 44 Wis. 82; *Guenther* v. *Jacobs*, 44 Wis. 354; *La Pointe* v. *O'Malley*, 47 Wis. 332; *Reed* v. *Butler*, 11 Abb. Pr. 128; *Scranton* v. *Baxter*, 3 Sandf. 660.

An attempt to commence the action without the service within sixty days is not sufficient.

Burgett v. *Strickland*, 32 Hun. 264; *Shaw* v. *Cock*, 78 N. Y. 194; *Sherry* v. *Gilmore*, 58 Wis. 324; *Auerbach* v. *Maynard*, 26 Minn. 421.

If an additional party be subsequently brought in, or a new cause of action inserted, the action can be regarded commenced as to such party or cause of action, only from the time the amendment was made.

Shaw v. *Cock*, 78 N. Y. 194; *Miller* v. *McIntyre*, 31 U. S. 6 Pet. 61 (8:320); *Mohr* v. *Lewis*, 69 Ala. 180; *Johnston* v. *Dist. of Columbia*, 1 Mackey, 427; *Miller* v. *McIntire*, 1 McLean, 65; *Hawthorn* v. *State*, 57 Ind. 286.

Mr. Justice **Bradley** delivered the opinion of the court; [328]

This suit was brought to recover the amount of 6 bonds payable August 1, 1863; 71 half yearly coupons due from February 1, 1858, to August 1, 1863; 31 half yearly coupons for $40 each, due from January 1, 1858, to January 1,

1873; and 31 other half early coupons for $40 each, due from January 1, 1858, to January 1, 1873. A summons at the suit of Elijah W. Carpenter and Edwin F. Knowlton was issued on the 29th of March, 1873, and served by the marshal on the second day of April, 1873, upon the city clerk and the city treasurer, and upon Chris. Meyer, an alderman of the city who was elected mayor at the city election, April 1, 1873, but not yet inducted into the office. The court, on motion, declared that the summons was not lawfully served, and made an order authorizing the clerk to return the summons to the marshal to be served on the defendant according to law or for such further action as the plaintiffs might direct.

Nothing more was done until the 9th of January, 1878, when the said Carpenter and Knowlton sued out an *alias* summons (so called), which was served by the marshal on the 23d of December, 1882, upon Rohr, the last mayor (but not then mayor); Bieber, city clerk; Gardner, city attorney; and Baxter the last (but not then) president or chairman of the board of street commissioners. As Carpenter had died on the first of September, 1881, no further proceedings were had on this last attempt at service; but on the 19th of June, 1883, an order was applied for and made by the court that the cause be revived in favor of Edwin F. Knowlton as executor of Carpenter and said Knowlton individually. Thereupon the new plaintiffs filed their complaint and issued a new summons, tested 29th March, 1873, which was served by the marshal on the 26th of June, 1883, upon the city clerk, the city attorney, and the last elected chairman of the [329] board of street commissioners. On the 14th of July, 1883, the defendant's attorneys entered an appearance to the action, and subsequently filed an answer containing a general denial and a plea of the Statute of Limitations. The plaintiffs replied to this latter plea by amending their complaint, and setting up, as in the case of *Amy* v. *Watertown*, No. 2 [*ante*, 953], just decided, a conspiracy on the part of the officials and people of Watertown to prevent a service of process on the city, specifying the conduct of the mayor and aldermen in resigning their offices and meeting in secret for the transaction of business, etc. (See the report of the case referred to.) They added the following averment:

"Said plaintiffs further allege that in the above entitled action said plaintiffs, on the 29th day of March 1873, filed a *præcipe* for a summons and an undertaking for costs, and a summons was issued in due conformity to law and placed in the hands of the United States Marshal for service, and that on April 2, 1873, the said marshal, after due and diligent search and inquiry, served the said summons on those persons whom, according to the best information he could derive, he had ascertained to be the mayor and city clerk of said City of Watertown, and on the same day returned the said summons as served according to law; that on April 22d, 1873, the said City of Watertown appeared specially in said action for the purpose of moving to set aside the service of said summons on the ground that the persons on whom the said summons had been served were not in fact, the mayor and city clerk of said city; that on June 19, 1873, the said motion came on to be heard, and this court ordered that the service of said summons be set aside for the reason that the persons so served were not the mayor and city clerk of said city, and ordered that the said summons be returned to the marshal to be served according to law; that since said date the said marshal has not been able to ascertain who were the mayor and city clerk or mayor or city clerk of said city or the persons on whom process could be served.

"Said plaintiffs further allege that, notwithstanding they have exercised due diligence and hired attorneys and agents for the purpose [330] of having process served on said city, they have been unable to this date to serve or have served the summons in this action on the mayor of said city, or on that person who, by law, should exercise the functions of mayor of said city."

The defendant filed an answer and an amended answer to this amended complaint. The amended answer contains the following special rejoinder to the averment respecting the issuing and service of process in 1873:

"*Fourth*. And, further answering said amended complaint, this the said defendant alleges, that on or about the 29th day of March, 1873, the Elijah W. Carpenter and Edwin F. Knowlton named in said complaint filed with the clerk of this court a *præcipe* for a summons, wherein they were named as plaintiffs and this defendant was named defendant, and an undertaking for costs, and a summons, issued pursuant to said *præcipe*, was then placed in the hands of the United States Marshal for said district for service, and that on or about the 2d day of April, 1873, said marshal returned said summons to this court with the following return of service thereon indorsed, to wit: 'Served on the within-named The City of Watertown by delivering to August Tauck, city clerk, and Fred. Meyer, city treasurer of said city, and Chris. Meyer, an alderman from the first ward of said city and an acting member of the board of aldermen thereof, and mayor elect of said city at the city election held April 1, 1873, each a copy of the within summons this April 2, 1873, there being no other person acting as mayor of said city;' that on or about June 19, 1873, on motion of defendant, appearing specially for that purpose, the said pretended service of said summons was decided and held to be illegal and void by this court, on the ground that said summons had not been served in the manner prescribed by law, and the same was then ordered to be returned to said marshal to be served according to law; and that said summons was not served upon this defendant at any time within sixty days after it was so as aforesaid placed in the hands of the said marshal for service, nor within sixty days after the said pretended service thereof was so decided and held by said court to be illegal and [331] void, and that the said summons was not and never has been at any time served upon said defendant, and no copy thereof has ever been delivered to or left with the mayor of said city, and that no action attempted to be commenced by the said summons or said pretended service thereof was at or before or since the time of the alleged decease of said Carpenter pending or existing in said court; that no other sum-

mons against this defendant, wherein said Carpenter and Knowlton were made plaintiffs, was ever issued out of said court or attempted to be issued on this defendant in or about the year 1873, and that the said summons is the identical and only summons against this defendant wherein said Carpenter and Knowlton were named as plaintiffs, mentioned or referred to in the said amended complaint. And this defendant, further answering, avers and alleges that this the first above entitled action against this defendant was first commenced on or about and not before the 19th day of June, 1883, by said plaintiffs herein then or soon thereafter delivering the summons, wherein they are named as plaintiffs, in the above entitled action, to the United States Marshal of said district to be served, and that on or about the 26th day of June, 1883, the said marshal made the delivery of the copies thereof of which he made his return, indorsed upon said summons and which is now on file in this action, and that on the 16th day of July, 1883, this defendant duly appeared herein and thereafter submitted itself fully to the jurisdiction of this court, and, as this defendant is informed and believes, the said plaintiffs never attempted to commence this said action nor used any diligence to commence the same before said 19th day of June, 1883.

"*Fifth.* And this the said defendant, for a further and separate defense, which it will insist upon herein to this said action and to the whole thereof, and to each and every cause of action set forth in said amended complaint, avers and alleges that neither this said action nor any of the causes of action averred or set forth in said amended complaint accrued within the six years next before the 19th day of June, 1883, nor on nor since the day and year [332] last aforesaid, and that on or after and not before the said 19th day of June, 1883, the summons last above mentioned was first delivered to the United States Marshal for service and to be served on this defendant, and that the same never was or had been delivered to such marshal nor to any officer or person for service or to be served on this defendant or otherwise before said 19th day of June, 1883; and this said defendant further avers and alleges that neither this said action nor any of the causes of action in the said amended complaint stated nor any part thereof accrued within six years before the commencement of this the above entitled action, and that the said action was not commenced before the said 19th day of June, 1883, nor was it commenced within the six years limited by law for the commencement thereof after the same accrued, and is barred, the whole thereof, by the Statute of Limitations of the State of Wisconsin; that as to all the bonds, interest warrants and coupons described in said complaint, and as to each and every one of said bonds, interest warrants and coupons, the said defendant saith and avers that each and all of said several causes of action in said complaint stated did not nor did any or either of them accrue thereon within the six years next before the commencement of this action, and that this said action and the whole thereof and each and every part thereof is barred by the Statute of Limitations of the State of Wisconsin."

The plaintiff demurred to this amended answer, but the demurrer was overruled, and the plaintiffs having declined to plead further, judgment was given for the defendant.

It is plain from the description in the complaint of the securities sued on, that most of them had become barred by the Statute of Limitations before the first summons was sued out in March, 1873. Only the last six years of coupons, being two sets of $40 each, and amounting to $960, were not barred at that time. Of course all the bonds and coupons were barred in June, 1883, when the last summons was issued, unless some cause existed for suspending or avoiding the operation of the statute. The plaintiffs relied on two grounds for this purpose: *first*, the impediments thrown in the way of the service of process by the defendant and its officers; *secondly*, the actual [333] commencement of an action in 1873 and keeping it on foot until the final service of process in 1883.

The first of these grounds was considered and held to be insufficient in the case of *Amy v. Watertown*, No. 2 [*ante*, 953], just decided. The second does not require an elaborate examination. Without stopping to inquire whether the process issued in 1873 could be kept on foot for five or ten years without any legal service, and without complying with the statute provided for in such cases, it is enough to say that by the laws of Wisconsin an action is not commenced for the purpose of stopping the running of the Statute of Limitations until service of process has been effected, or until service has been attempted and followed up by actual service within sixty days or publication within that time. The text of the law on this subject is found in sections 4239 and 4240 of the Revised Statutes of Wisconsin, published in 1878. The prior edition of 1858 contained substantially the same provisions. (See R. S. 1858, p. 822.) The sections referred to are as follows:

"Section 4239. An action shall be deemed commenced within the meaning of any provision of law which limits the time for the commencement of an action, as to each defendant, when the summons is served on him or on a codefendant who is a joint contractor or otherwise united in interest with him.

"Section 4240. An attempt to commence an action shall be deemed equivalent to the commencement thereof within the meaning of any provision of law which limits the time for the commencement of an action when the summons is delivered with the intent that it shall be actually served, to the sheriff or other proper officer of the county in which the defendants, or one of them, usually or last resided; or if a corporation organized under the laws of this State be defendant, to the sheriff or the proper officer of the county in which it was established by law, or where its general business is transacted, or where it keeps an office for the transaction of business, or wherein any officer, attorney, agent or other person upon whom the summons may by law be served, resides or has his office; or if such corporation has no such place of business, or any officer or other per- [334 son upon whom the summons may by law be served, known to the plaintiff, or if such defendant be a nonresident, or a nonresident corpora-

tion, to the sheriff or other proper officer of the county in which plaintiff shall bring his action. But such an attempt must be followed by the first publication of the summons or the service thereof within sixty days. If the action be in a court not of record, the service thereof must be made with due diligence."

Now it is clear from what was said in the case of *Amy* v. *Watertown*, No. 1 [*ante*, 946], that there was never any legal service of process upon the defendant in this case. The summons was never served upon the mayor of the city, or upon any person having or exercising the powers of mayor, and there is no pretense that the directions of section 4240 were followed, or attempted to be. The action was really not commenced within the meaning of the statute until the attorneys of the defendant voluntarily entered a general appearance. This was done on the 14th of July, 1883. At that time more than ten years and a half had elapsed since the last coupon sued on became due.

We have no hesitation, therefore, in saying that the Court below committed no error in overruling the plaintiff's demurrer and giving judgment for the defendant. *That judgment is affirmed.*

Edwin F. Knowlton, Individually and as Executor, Plff. in Err., *v. The City of Watertown* (No 199).

Rufus P. Spalding et al., Plffs. in Err., *v. The City of Watertown* (No. 200).

In errror to the Circuit Court of the United States for the Western District of Wisconsin.

These cases are in all essential respects the same as that of No. 198, in which the opinion has just been announced, and the same *judgment — of affirmance — is therefore rendered therein.*

---

[267] THE MANHATTAN BANK OF MEMPHIS, TENNESSEE, *Appt.*,

v.

ELIZA WALKER.

ELIZA WALKER, *Appt.*,

v.

THE MANHATTAN BANK OF MEMPHIS, TENNESSEE.

(See S. C. Reporter's ed. 267-280.)

Suit to charge trustee—special deposits in bank—liability of bank—receipt for deposit—unlawful appropriation of deposit—wrong delivery to agent.

1. A suit, brought to charge the defendant, as a trustee, for a breach of trust in regard to a special deposit, is one of equitable cognizance.

2. If a bank be accustomed to take special deposits of bonds and stocks, and this is known and acquiesced in by the directors, and the property thus deposited is lost by the gross carelessness of the bank, a liability ensues in like manner as if the deposit had been authorized by the terms of the charter.

3. The execution of a receipt or certificate by the assistant cashier, for such a deposit, and its transmission by the bank to the depositor creates the relation of bailor and bailee between the latter and the bank, and makes it an act of gross negligence for the bank to deliver, or dispose of, or appropriate the securities, without the depositor's direct authority.

4. The statement in the receipt that the agent for the depositor had placed the securities with the bank on special deposit, is virtually a statement that the depositor, by such agent, had placed the securities with it on special deposit.

5. The appropriation by the bank of such securities so specially deposited, to the payment of a debt due to the bank by a firm in which the agent who made the deposit was a partner, at the request of such agent, but without authority of the depositor, was an unlawful appropriation.

6. Such bank had no right to deliver bonds thus specially deposited to the agent who deposited them, when it knew that he intended to deliver them to another bank as security for a loan to his firm, and also knew that such use of the bonds was an improper disposition of them, and such delivery for such use rendered the bank a party to the misappropriation of the bonds and liable to the depositor for their value.

[Nos. 205, 682.]

Argued March 14, 15, 1889. Decided April 8, 1889.

CROSS appeals from decrees of the Circuit Court of the United States for the Western District of Tennessee, for a recovery against the defendant for a part of a special deposit, and in favor of defendant for the remainder of the special deposit sued for. *Reversed, with directions to the Court below to enter a judgment for the whole of the special deposit claimed.*

See *S. C.* below, 25 Fed. Rep. 247.

The facts are stated in the opinion.

Messrs. **S. P. Walker**, *C. W. Metcalf* and *L.* and *E. Lehman*, for Walker:

The defendant bank, as a corporation, assumed the obligations of a bailee, by receiving the complainant's securities on special deposit.

First Nat. Bank v. *Graham*, 100 U. S. 699 (25: 750); *Foster* v. *Essex Bank*, 17 Mass. 479.

The execution of the certificate of deposit, and its transmission by mail to the complainant, created the relation of bailor and bailee between complainant and the bank, and the sole question is of the liability of the defendant bank, because of a misdelivery of the securities. The securities not having been lost by fire, theft or otherwise, but having been delivered to Judah, or to the Bank of Commerce on his order, the case must turn on the express or implied authority of Judah to withdraw them, or to direct the delivery to the Bank of Commerce, and not on a question of negligence.

Story, Bailm. §§ 106, 414; *Colyar* v. *Taylor*, 1 Coldw. 372; *Stewart* v. *Frazier*, 5 Ala. 114; *James* v. *Greenwood*, 20 La. Ann. 297; *Honig* v. *Pac. Bank*, 73 Cal. 464.

Judah had no agency in respect of and no power over these securities after the execution of the certificate of deposit, and its transmission to complainant.

Chattahoochee Nat. Bank v. *Schley*, 58 Ga, 369.

Upon the broadest powers of a trustee, in Judah, to sell the securities, reinvest the proceeds, etc., there would be no implied power to pledge them.

Loring v. *Brodie*, 134 Mass. 453.

And still less a power to pledge for an antecedent debt of, or for a present loan of money to Walker, Sons & Co. Judah being a partner in that firm, or its general business manager, the bank was bound, at its peril, to see that he had power to convert the securities to its use, and is liable for their value, in the absence of actual power to do that exact thing.

Duncan v. *Jaudon*, 82 U. S. 15 Wall. 165 (21:142); *Smith* v. *Ayer*, 101 U. S. 320 (25:955); *Cent. Nat. Bank* v. *Conn. Mut. L. Ins. Co.* 104 U. S. 54 (26:693); *Shaw* v. *Spencer*, 100 Mass. 389.

The Goldsmith note was converted to the use of, and its proceeds are yet held by, the bank, making it liable to account therefor.

Schouler, Bailm. 62; Story, Bailm. § 102; *Alexander* v. *Alderson*, 7 Baxt. 403; *Osborn* v. *Bank of U. S.* 22 U. S. 9 Wheat. 738 (6:204).

And it is liable for the $5,200 of bonds, because it not only actively aided and co-operated in an unlawful conversion of them by Judah, with full knowledge of his purposes, but itself received and yet retains a portion of the fruits of that conversion.

Parker v. *Gilliam*, 10 Yerg. 394.

General power to sell, reinvest, etc., would not include a power to pledge.

Loring v. *Brodie*, 134 Mass. 453; *Page* v. *Cooper*, 16 Beav. 396; Perry, Trusts, § 768; *Merchants' Nat. Bank* v. *State Nat. Bank*, 77 U. S. 10 Wall. 604 (19:1008).

Judah, a member of the firm of Walker, Sons & Co., would not, on the broadest powers of a trustee, be entitled to lend the fund to himself or to the firm of which he was a member.

Shaw v. *Spencer*, 100 Mass. 389; *Duncan* v. *Jaudon*, 82 U. S. 15 Wall. 165 (21:142); *Smith* v. *Ayer*, 101 U. S. 320 (25:955).

Mr. **T. B. Turley**, for the Bank:

The bank is a bailee without reward. Such a bailee is liable only for gross negligence.

Foster v. *Essex Bank*, 17 Mass. 479; *Giblin* v. *McMullen*, L. R. 2 Pr. C. 317; *Chattahoochee Nat. Bank* v. *Schley*, 58 Ga. 369; *Ray* v. *Bank of Ky.* 10 Bush, 344; *Lloyd* v. *West Branch Bank*, 15 Pa. 172; *Leeds* v. *Trenton Bank*, Stew. N. J. Law & Eq. Dig. 78; *Scott* v. *Chester Valley Nat. Bank*, 72 Pa. 471; *First Nat. Bank* v. *Graham*, 79 Pa. 116, 118; *Tompkins* v *Saltmarsh*, 14 Serg. & R. 275; *Lancaster County Nat. Bank* v. *Smith*, 62 Pa. 47; *Wiley* v. *First Nat. Bank*, 47 Vt. 555; *Smith* v. *First Nat. Bank*, 99 Mass. 605; Story, Bailm. § 72; *First Nat. Bank* v. *Ocean Nat. Bank*, 60 N. Y. 294, 295; *Haynie* v. *Waring*, 29 Ala. 265; *Lampley* v. *Scott*, 24 Miss. 533; Schouler, Bailm. 2d ed. § 15, pp. 48, 49, 42-45, and notes as applicable to special deposits in bank.

Judah's agency was not only general, it was universal.

Whart. Agency, § 116, p. 72; § 122, p. 75.

The fact that Judah was also the agent of Walker Sons & Co. makes no difference.

Jones v. *Smith*, 1 Phill. Ch. (19 Eng. Ch.) 244.

The bank acted honestly, fairly, in good faith, and with ordinary circumspection.

Hall v. *Livingston*, 3 Del. Ch. 398; *Fleming* v. *Burgin*, 2 Ired. Eq. 591-2; *Jones* v. *Smith*, 1 Hare, 53; *Vest* v. *Michie*, 31 Gratt. 149; *Dey* v. *Dunham*, 2 Johns. Ch. 190; *LeNeve* v. *LeNeve*, 2 Lead. Cas. in Eq. fourth Am. ed. pt. 1, 167; *Woodworth* v. *Paige*, 5 Ohio St. 76; *Field* v. *Schieffelin*, 7 Johns. Ch. 150.

Mere notice that the trustee intends to commit a breach of trust is not sufficient to involve the party treating with the trustee in the consequence of the subsequent breach of trust. It requires something more; there must be some participation in the breach of trust.

Potter v. *Gardner*, 25 U. S. 12 Wheat. 503 (6:706); 1 Story, Eq. § 395; *Duncan* v. *Jaudon*, 82 U. S. 15 Wall. 165 (21: 142); *Wormley* v. *Wormley*, 21 U. S. 8 Wheat. 447 (5:651); *Champlin* v. *Haight*, 10 Paige, 275; *Nicholls* v. *Peak*, 12 N. J. Eq. 69.

Mr. Justice **Blatchford** delivered the opinion of the court: [268]

This is a suit originally brought in the Chancery Court of Shelby County, Tennessee, by Eliza Walker against the Manhattan Bank of Memphis, a Tennessee banking corporation. The suit was removed by the plaintiff into the Circuit Court of the United States for the Western District of Tennessee. The bill of complaint and the answer were both of them put in before, and the replication was filed after, the removal of the cause.

The bill prays for a decree for the return to the plaintiff of $3,000 of the second mortgage bonds of the Memphis and Charleston Railroad Company and $2,200 of the second mortgage bonds of the Mississippi Central Railroad Company, and a promissory note for $5,000, made by Edward Goldsmith, and of certain shares of the capital stock of the defendant, amounting to $6,000, attached to the said promissory note as security therefor. The bill alleges that the defendant, in the course of its business, and on the 27th of November, 1880, received on special deposit the above named bonds, promissory note, and shares of stock, belonging to the plaintiff, together with a certificate of the stock of the People's Insurance Company, for $1,100, and four promissory notes for $325 in the aggregate; that the said bonds had coupons attached thereto for the interest payable thereon at certain stated periods; [269] that the defendant gave its obligation in writing, as evidence of the receipt on special deposit, from the plaintiff, of the said securities, and was bound to deliver them to the plaintiff on demand; and that the stock of the People's Insurance Company, and the $325 of notes, were returned to her, but the bonds and the coupons attached thereto, and the note of Goldsmith, and the bank stock, were never returned to her, although she made demand upon the defendant for them. The bill prays for a decree for the return of the property, and for the amount of the decline in its value from the time when she demanded it until the time when it shall be restored; and, if not restored, then for a personal decree against the defendant for the highest value of it at any time since she first made demand for it to the date of the decree, with interest.

The answer sets up in defense, that, for some time prior to November, 1880, Mr. G. H. Judah, a brother-in-law of the plaintiff, kept an account and had transactions with the defendant, in which he styled himself sometimes agent,

and sometimes guardian, but without disclosing for whom he was agent or guardian; that he made deposits and drew checks in that way on his account, as the other depositors with the defendant did, and, at different times prior to November, 1880, bought the bonds and insurance company's stock named in the bill, and paid for them by checks on his account with the defendant; that, as he would buy those securities, he would leave them on deposit with the defendant, without taking any receipt for them; that, in the fall of 1880, he left with the defendant the Goldsmith note and the collateral therefor, and the four other notes mentioned in the bill; that those notes were payable to the said G. H. Judah as agent simply, without saying for whom he was agent: that, prior to November 27, 1880, he had never told the defendant whether he had any principal or not, or who his principal was, or for whom he was guardian, if for anyone; that on or about that date, he asked the defendant to give to him, as agent for the plaintiff, a receipt for the bonds, stocks, and notes, telling it at the time that he was the plaintiff's general agent for the management and control of those securities and [270] notes; that the defendant gave to him a receipt, as such agent; that, after the receipt was given, some of the notes described in it were paid while they were on deposit with the defendant, and the said Judah, as agent of the plaintiff, drew out the money in the ordinary way, and from time to time, as agent of the plaintiff, withdrew from the custody of the defendant the items mentioned in the receipt, until he had withdrawn them all, when he gave to the defendant a receipt for them, in which he acknowledged having received them as agent for the plaintiff; that, if the plaintiff owned the items, Judah had authority from her to control and manage them, as fully as she could have done as owner, if they had been in her actual possession, instead of in his possession as her agent; that he was her general agent with reference to them, and had power not only to deposit them, but also to withdraw them from deposit, if he saw fit; that, when he demanded them from the defendant, his agency was still in force, and the defendant could not legally have refused to give them up to him as the agent of the plaintiff; that, upon returning them to Judah, as such agent, all liability of the defendant with reference to them ceased; and that the defendant is not indebted to the plaintiff on account of said securities.

Proofs were taken on both sides and the cause was heard; and the court made a decree adjudging to the plaintiff a recovery against the defendant of $5,000, being the amount of the Goldsmith note, with $1,175 interest thereon from the date of its maturity, November 1, 1881, on the ground that the defendant had collected the amount of that note and appropriated the same to its own use, and further decreeing that the defendant was not liable to the plaintiff for any of the other items mentioned in the bill, and that neither party should recover costs from the other. Each party has taken a separate appeal to this court.

The answer does not set up, as a defense, that the defendant was not authorized to receive the property in question as a special deposit, or to give the receipt therefor. It was stipulated between the parties, that the defendant received no compensation, as bailee, for the custody of the property sued for; that the [271] Memphis & Charleston Railroad bonds bore 7 per cent interest, payable semi-annually, and evidenced by interest coupons maturing January 1 and July 1 in each year, the bonds maturing on the 1st of January, 1885; and that the Mississippi Central Railroad bonds bore 8 per cent interest, payable semi-annually, and evidenced by coupons maturing February 1 and August 1 in each year, the bonds maturing on the 1st of February, 1885.

The suit is plainly one of equitable cognizance, the bill being filed to charge the defendant, as a trustee, for a breach of trust in regard to a special deposit.

The opinion of the circuit court, reported in 25 Fed. Rep. 247, contains so full and accurate a statement, in the main, of the facts of the case, developed by the proofs, that we repeat and adopt it, as follows: "The firm of Walker, Bros. & Co., composed of the plaintiff's husband, his brother, and G. H. Judah, was a large mercantile house in Memphis that disastrously failed and made an assignment. The plaintiff and the wife of the other brother, being creditors of the firm for large amounts due them for loans to the firm, owned the book accounts, which were bought for their use by Judah in the name of Maas, the book keeper, at the assignee's sale, the husband of plaintiff paying for her share. These books, with the knowledge and consent of plaintiff and her husband, who afterwards died—but it seems without any specific instructions of any kind—were left with Judah to collect the debts and manage the fund for the two beneficiaries, who resided in other cities. His control over the funds was of the most plenary character. He married a sister of the two brothers, and had been the most active member of the firm and was best acquainted with its business. The collections were deposited with the defendant bank in his name as 'guardian,' or in the name of Maas, the former book keeper of the firm, who became the book keeper and assistant cashier of the defendant bank. Prior to November 27, 1880, Judah had purchased certain securities with the funds, which he kept on special deposit with the bank or in the name of Maas. On that day he came to the bank and asked Maas for a receipt showing the special [272] deposit, to send to the plaintiff. The bank was not in the habit of giving receipts or certificates for these special deposits, but kept them noted by numbers in a book used for that purpose. Maas wrote a receipt on a sheet of the bank's letter paper, and, according to his and Judah's testimony, placed it in one of the bank's envelopes addressed to the plaintiff, and put it with the bank's mail. The plaintiff and her daughter swear that it was accompanied by a letter from Maas. What was in the letter does not appear, and, not being preserved, it has not been produced, but is supposed to have been burned as useless. The routine of the bank was that Goldsmith, the cashier, personsonally signed and inspected every letter and himself enveloped and addressed them. This letter he did not see or sign, and it was never copied into the letter press. The receipt was as follows:

'Manhattan Bank of Memphis.

'L. Levy, president; L. Hanauer, vice-president; E. Goldsmith, cashier; M. Maas, ass't cashier.

'MEMPHIS, TENN., *November* 27, 1880.

'G. H. Judah, Esq., agent for Mrs. Eliza Walker, of Philadelphia, has placed with us on special deposit:

'$3,000, Memph. & Charl. R. R. 2d-m'tg. bonds.

'$2,200, Miss. Central " " "

'$1,100, People's Insurance Co. stock.

'5,000, note E. G., and collateral attached, $6,000 M. Bank stock.

'$325, interest notes (4 @ $81.25.)

'MAURICE MAAS,
'*Ass't Cashier.*'

"Some time in 1880 the son of the plaintiff and a son of the other Walker, both young men, commenced business at Memphis as Walker, Sons & Co. This firm kept an account with the defendant bank, and later with the Bank of Commerce. It was 'never very strong' financially, and its business was cotton factorage. Judah was thought by Goldsmith to be a partner, and the plaintiff at one time swore he [273] was a silent partner, but afterwards stated she was informed he was not. He says he was only a salaried manager. The members of the firm were inexperienced, and Judah was, in fact, the almost sole manager of all its affairs—the master spirit of the concern. It is not shown that the young men took any part, except one of them kept the books after Maas had opened them.

"The plaintiff, in October, 1880, lent to her son, the firm being also responsible, $10,000, as his capital in the concern, derived from the life insurance of her husband. Judah also appropriated or lent to the firm, from time to time, sums amounting to over $9,000, from his collections in behalf of plaintiff on the old books. The interest on these sums and on the special deposit funds were remitted by the firm —not always promptly—to the plaintiff at Philadelphia, by exchange or checks; and sometimes the coupons were sent by express to her. When remittances were delayed she wrote or telegraphed the firm. She never communicated with the bank in any way. The remittances were nearly always in letters by her son, and they contained apologies and explanations for delays.

"The defendant bank made large advances to the firm, generally by discounts on the security of the firm's 'country paper' due from its customers. Judah promised the bank to always protect it as far as in his power, and the relation was very confidential. The bank began to urge him for a reduction of the account, and, not being willing to accommodate him fully, he opened an account with the Bank of Commerce. The Goldsmith note maturing November 1, 1881, he" [Goldsmith] "notified Judah that he should not longer need the loan. Maas and Judah say that 'a few days' before the note matured, Judah, being unable to continue the loan to Goldsmith, determined to lend the money to Walker, Sons & Co.; and to accomplish that purpose the note of Goldsmith was discounted by the bank, and the proceeds placed to the credit of Walker, Sons & Co. . . . At the same time, Judah urged a loan on the other securities of plaintiff on special deposit, but the bank declined this on the ground that cotton factors' accounts were not desirable to a [274] bank with so small a capital. . . The bank did not make the loan, because Judah was unwilling to pay the money on the old account. He could get the money at the Bank of Commerce. He told the officers of the defendant bank so, and they delivered the securities to him, fully knowing that he was going to make that use of them. Maas consulted the president and the attorney whether he should deliver the securities to Judah, and they directed him to do so. He had forgotten, however, giving him the receipt and sending it to plaintiff, and neither the president nor the attorney knew that fact. Goldsmith, the regular cashier, was absent in New York, but he never knew that fact. Maas never mentioned it, because, he says, he deemed it unimportant at the time and forgot it afterwards. The securities were pledged to the Bank of Commerce, except the the People's Insurance stock, which was on the books in plaintiff's name and could not be used by Judah. They were sold by that bank to satisfy the loan, and are lost to plaintiff. The firm of Walker, Sons & Co. soon after failed disastrously, owing defendant bank a balance of over $5,000, notwithstanding Judah, according to his promise, appropriated to the debt certain stocks of his own, and his diamonds. After the failure, Kramer, a son-in-law of plaintiff and a lawyer, came to Memphis and presented the receipt, and then the plaintiff learned, for the first time, that the securities had been so used by Judah and the bank. Kramer secured the delivery to himself of certain 'country paper' and mortgages to secure notes that were then first taken for the $20,000 lent by plaintiff to the firm, not including, however, the securities in controversy here. An angry lawsuit grew out of this transaction, in this family, in the courts of Arkansas. A New York gentleman, nephew of the other young Walker, filed a bill stating that the securities belonged to him to secure his guaranty of a loan by the Importers' and Traders' Bank of New York to the firm for some $26,000, and that he had sent them to the firm for collection, and that they were, by the plaintiff's son, and without consent of the other Walker or Judah, turned over to his own mother; all of which was denied, and the averment made that this scheme was trumped up to defeat plaintiff of [275] her advantage and enable Judah to continue business on the assets at Indian Bay, Arkansas."

The circuit court held that the defendant was liable for the amount of the Goldsmith note and interest from the date of its collection, because it had collected the money and never paid it to the plaintiff, but had, without due authority, appropriated it to his own use, on account of the debt due to it from Walker, Sons & Co. As to the $5,200 of bonds, the court held that knowledge by the defendant of the intended breach of trust by Judah did not make the defendant privy to it and liable for it, as the defendant did not participate in the profits of the fraud; that the receipt given by the defendant did not change the relation of Judah to the property and to the defendant, as

it was not a receipt to the plaintiff but one to Judah; and that it did not satisfactorily appear that the defendant received any part of the money advanced on the bonds.

We are of opinion that the plaintiff is entitled to recover, not only in respect to the Goldsmith note, but in respect to the $5,200 of bonds.

In regard to the Goldsmith note, shortly before it matured, in November, 1881, Judah indorsed it over to the defendant as collateral security for a note of larger amount, made by Walker, Sons & Co., which the defendant then discounted at the instance of Judah. The proceeds of that discount were, to the extent of $6,000, applied by the defendant upon a debt antecedently existing from Walker, Sons & Co. to it. When the Goldsmith note became due, in November, 1881, the defendant, claiming to be the owner of it, collected it and retained the proceeds. Thus a note which confessedly, and to the knowledge of the defendant, belonged to the plaintiff, was diverted to the use of the defendant by the co-operation of it and of Judah. Judah, if not a partner in the firm of Walker, Sons & Co., was, to the knowledge of the officers of the defendant, the active and controlling manager, both in its business with the defendant and otherwise, of the affairs of that firm. Maas, the assistant cashier of the defendant, [276] and who was its acting cashier during the period of the transactions in question, was, before his connection with the defendant, the confidential book keeper of the prior firm of Walker, Bros. & Co., of which Judah was a member, and had a close personal intimacy with Judah. When the book accounts of Walker, Bros. & Co. were sold, Maas bought them, on behalf of the plaintiff and her sister, and the funds realized from that purchase were in part deposited in the name of Maas, with the defendant; and Maas, on the request of Judah, opened the books of Walker, Sons & Co., when that firm was formed. Judah promised Maas that he would certainly protect the defendant in case of disaster to the firm of Walker, Sons & Co.

At the time the Goldsmith note was thus converted, the condition of Walker, Sons & Co. was precarious, if the firm was not insolvent. Before the conversion of the railroad bonds, Judah pledged to the defendant certain stocks belonging to himself, for the debt due to it by Walker, Sons & Co.; and it is apparent that Judah was constantly being pressed by the defendant to make payments on the firm's debt to it, and that Maas, being the acting cashier of the defendant, knew, from the state of the account which the firm kept with the defendant, that it was substantially without available funds. In none of the transactions between the defendant and Judah in regard to the Goldsmith note and the bonds, was the receipt or certificate which had been sent to the plaintiff redelivered to the defendant; and the defendant knew that it had gone into the hands of the plaintiff, because it had been sent to her by mail directly from the defendant.

In *National Bank* v. *Graham*, 100 U. S. 699 [25:750], one Graham had deposited in a national bank certain bonds of the United States for safe keeping, and had received from the cashier a receipt setting forth that fact, and that the bonds were to be redelivered on the return of the receipt. Before and after that time, the officers of the bank were accustomed to receive such deposits from others, and they were entered in a book kept by the bank. The bonds were stolen from the custody of the bank, through its gross negligence. On this state of facts, this court said, p. 702 [751]: [277] "If a bank be accustomed to take such deposits as the one here in question, and this is known and acquiesced in by the directors, and the property deposited is lost by the gross carelessness of the bailee, a liability ensues in like manner as if the deposit had been authorized by the terms of the charter." In support of this proposition, the court cited the cases of *Foster* v. *Essex Bank*, 17 Mass. 479; *Lancaster Co. Bank* v. *Smith*, 62 Pa. 47; *Scott* v. *Chester Valley Nat. Bank*, 72 Pa. 471; *Bank of Carlisle* v. *Graham*, 79 Pa. 106; *Turner* v. *Bank of Keokuk*, 26 Iowa, 562; *Smith* v. *Bank of Westfield*, 99 Mass. 605; *Chattahooches Bank* v. *Schley*, 58 Ga. 369.

We are of opinion that the execution of the receipt or certificate in question, and its transmission by mail directly by the defendant to the plaintiff, created the relation of bailor and bailee between her and the defendant, and made it an act of gross negligence for the defendant to deliver, or dispose of, or appropriate the securities in question, on the sole request of Judah, and without her direct authority. Under the circumstances of the case, the receipt having been made out by Maas, the assistant cashier, and sent by him to the plaintiff, on the request of Judah made on her behalf, the statement in the receipt that Judah, agent for the plaintiff, had placed the securities with the defendant on special deposit, must be regarded as virtually a statement that the plaintiff, by Judah as her agent, had placed the securities with it on special deposit.

Maas' statement, in his testimony, is that Judah came to him, while he was in the discharge of his duties in the bank, "and said he wanted a receipt, or a statement rather, of what securities he had there on special deposit, to send to Mrs. Walker in Philadelphia. . . . He said Mrs. Walker wanted to know what she held. . . . About that time, on our special deposit book, these bonds and note and stock, mentioned in said receipt, were entered as deposited by G. H. Judah, ag't Mrs. Eliza Walker." Maas further states that Judah never exhibited any authority to him or to the bank, to dispose of the note and the bonds and securities mentioned in the certificate which was sent to Mrs. Walker.

Judah testifies that the instructions of the [27 plaintiff to him did not, directly or indirectly, authorize him to pledge any bonds or securities obtained with her money, for his own debts or the debts of others, and that his power was limited to invest her moneys for her exclusive benefit and use.

It is very clear that Judah had no power, either in fact or in law, to pledge the Goldsmith note as security for an existing debt of Walker, Sons & Co. to the defendant. Such act was not an investment of the trust fund, and the officers of the defendant knew that it was not. *Duncan* v. *Jaudon*, 82 U. S. 15 Wall. 165 [21:142]; *Smith* v. *Ayer*, 101 U. S.

320 [25:955]; *Nat. Bank* v. *Ins. Co.* 104 U S. 54 [26:693]; *Shaw* v. *Spencer*, 100 Mass. 382; *Loring* v. *Brodie*, 134 Mass. 453.

It is urged on the part of the defendant, that Judah, as agent of the plaintiff, collected the book accounts of Walker, Bros. & Co.; that he deposited the moneys collected with the defendant, to his credit as guardian; that out of those funds he made loans to Walker, Sons & Co., to which the plaintiff did not object; and that he bought the securities in question with moneys belonging to the same fund. But, from the fact that the plaintiff had lent to the firm of Walker, Sons & Co. other moneys, it does not follow that, after the giving of the receipt in question, authority from her to dispose of the securities so placed with the defendant on special deposit, is to be inferred. Her demand upon the defendant, through Judah, for the receipt showing the special deposit, and the sending of such receipt directly to her by the defendant, changed the relations of herself and Judah and the defendant to the securities deposited. The defendant knew, as well as did Judah, that an investment of the proceeds of any of the securities in a loan to Walker, Sons & Co., was not a safe investment. It also knew that the appropriation of the proceeds of the Goldsmith note towards paying a debt due to it by Walker, Sons & Co., was an unlawful appropriation; and that the securities covered by the receipt were held as investments, and were the property of the plaintiff. So far as the collection of the interest on the Goldsmith note and on the bonds was concerned, when the moneys collected in [279] fact reached the plaintiff, the transactions were completed; and no argument can be drawn from them in support of any implied authority to Judah or to the defendant to divert or appropriate the principal of the securities.

The views above stated, as applicable to the Goldsmith note, apply also, very largely, to the $5,200 of bonds. Under the terms of the receipt, the plaintiff was the bailor and the defendant was the bailee, in respect of the bonds, equally with the note. The defendant was not the bailee of Judah, so as to be authorized to deliver the bonds to Judah without the authority of the plaintiff. The defendant had no right to deliver the bonds to Judah, when it knew that Judah intended to deliver them to the Bank of Commerce as collateral security for a loan of money to be made by that bank to Walker, Sons & Co.; and this, without regard to the question whether or not the defendant was to receive, or did receive, any part of the money borrowed from the Bank of Commerce. Judah applied to the defendant for a loan of money for Walker, Sons & Co. on the bonds. Maas, representing the defendant, declined to make the loan. On receiving such refusal, Judah stated to Maas that he could probably get the money at the Bank of Commerce. Afterwards, he called upon Maas for the bonds, and told him he had got the money at the Bank of Commerce; and Maas knew, when he handed the bonds to Judah, that Judah received them with a view to a loan to be made by that bank to Walker, Sons & Co.; and Maas also knew at that time that Judah was the agent of Walker, Sons & Co. By the face of the receipt, the defendant recognized the plaintiff as the true owner of the bonds, her name being mentioned in it; and it was capable of no other construction than that the plaintiff owned the securities mentioned. Knowing, from what passed between Maas and Judah, that the bonds were to be used to raise money for the benefit of Walker, Sons & Co., and knowing that such use was an improper disposition of the bonds, unless the transaction were affirmatively and directly sanctioned by the plaintiff, the defendant became a party to the misappropriation of the bonds. It is immaterial, in this view, whether or not the defendant received any portion of the money loaned by the Bank of Commerce on the security of the bonds.

It results from these views that the decree of the Circuit Court must be reversed, and the case be remanded to that Court with a direction to enter a decree in favor of the plaintiff, not only for the amount of the Goldsmith note, namely, $5,000, with interest from November 1, 1881, but also for the proper value of the $5,200 of bonds, with proper interest, such value and interest to be ascertained by the Circuit Court, and the plaintiff to recover costs in this Court on both appeals, and costs in the Circuit Court. [280]

AUGE O. HAMMER, *Plff. in Err.*, [291]
v.
THE GARFIELD MINING AND MILLING COMPANY.

(See S. C. Reporter's ed. 291-301.)

Proof of foreign corporation — description of mining claim — oath of locators — erroneous ruling—forfeiture.

1. Under the laws of Montana with reference to foreign corporations, a copy of the certificate of the incorporation of a company in New York, as acknowledged before a notary public, authenticated by the certificate of the Secretary of the State of New York, under his official seal, as being a correct copy of the duplicate original on file in his office, is sufficient evidence of its incorporation.

2. A description in the notice of location of a mining claim is sufficient, under § 2324 of the Revised Statutes which describes the claim as located a certain number of feet from another mine; such mine will be presumed to be a natural object or permanent monument within the meaning of the statute until the contrary appears, where the location is further described by the length of its boundary lines and stakes at the corners.

3. The oath of one of the locators of a mining claim, accompanying the recorded notice of location as to their citizenship, is *prima facie* evidence of that fact within the statute.

4. A ruling of the court respecting the inferences deducible from the prior possession of the plaintiff is not erroneous, nor prejudicial to the defendant, where the validity of the original location is not put in issue by the answer, which only sets up a forfeiture of the claim by the plaintiff and defendant's relocation of it.

5. A forfeiture cannot be established except upon clear and convincing proof of the failure of the former owner to have work performed or improvements made to the amount required by law.

[No. 207.]

Submitted March 15, 1889. Decided April 8, 1889.

IN ERROR to the Supreme Court of the Territory of Montana, to review a judgment for the plaintiff in an action to quiet its title to a

mining claim against the claims, demands or pretensions of the defendant, and estopping defendant from setting up any claim thereto. *Affirmed.*

The facts are stated in the opinion.

Messrs. **Edwin W. Toole** and **Joseph K. Toole,** for plaintiff in error:

Foreign corporations have no legal existence in any State or Territory other than that of their creation.

Bank of Augusta v. *Earle,* 38 U S. 13 Pet. 519, 538 (10:274).

Legislatures of other States or Territories may exclude them altogether from doing business within their limits, or impose such conditions or qualifications as they may see proper before permitting them to exercise any rights therein.

LaFayette Ins. Co. v. *French,* 59 U. S. 18 How. 407 (15:452); *Ducat* v. *Chicago,* 77 U. S. 10 Wall. 410 (19:972); *Paul* v. *Va.* 75 U. S. 8 Wall. 168 (19: 357); Cooley, Stat. Lim. 285; *Wood M. & R. Mach. Co.* v. *Caldwell,* 16 Am. Law. Reg. N.S. 554, 54 Ind. 270; *State* v. *Cent. Pac. R. Co.* 10 Nev. 47; *Barstow* v. *Union Con. S. Min. Co.* Id. 386; *Day* v. *Newark India Rubber Mfg. Co.* 1 Blatchf. 628; *Pomeroy* v. *New York & N. H. R. Co.* 4 Blatchf. 120; *Lester* v. *Howard Bank,* 33 Md. 558; *Re Comstock,* 3 Sawy. 218, 219.

The penalty in the law is a prohibition from doing or carrying on any business in the Territory without filing the paper required.

Lyon v. *Strong,* 6 Vt. 219; *Robeson* v. *French,* 12 Met. 24; *Gregg* v. *Wyman,* 4 Cush. 322; *Pattee* v. *Greely,* 13 Met. 284; *Ohio & M. R. Co.* v. *Wheeler,* 66 U. S. 1 Black, 286 (17:130); Chicago Legal News, April 20, 1878; Second Cent. L. J. '88, 4th ed. 463.

Mr. **Eppa Hunton,** for defendant in error:

This court will not interfere if there is only a question of the sufficiency of the evidence to justify the verdict.

Terre Haute & I. R. Co. v. *Struble,* 109 U.S. 384 (27:771); *Wabash R. Co.* v. *McDaniels,* 107 U. S. 456 (27: 606).

A complaint which alleges the ownership and possession to be in the plaintiff, and the adverse claim of defendant, and that such claim is without right, states a legal cause of action.

Rough v. *Simmons,* 65 Cal. 227; *Rough* v. *Booth,* 3 Pac. Rep. 805.

The witness, whose opinion was given, was no expert.

Bird v. *Com.* 21 Gratt. 800; *Jones* v. *Tucker,* 41 N. H. 546; *State* v. *Phair,* 48 Vt. 366, 377; *Dickenson* v. *Fitchburg,* 13 Gray, 546-553; 1 Greenl. Ev. § 440.

Whenever the subject matter or inquiry is within the common experience of all men of common education, the opinion of experts is inadmissible.

Milwaukee & St. P. R. Co. v. *Kellogg,* 94 U. S. 472 (24: 258); *Chicago* v. *Greer,* 76 U. S. 9 Wall. 734 (19: 771); *Cent. Pac. R. Co.* v. *Pearson,* 35 Cal. 247; 1 Greenl. Ev. § 448.

Instructions that worked no injury to the plaintiff are not assignable as error.

Johnston v. *Jones,* 66 U. S. 1 Black, 209 (17: 117); *Chittenden* v. *Brewster,* 69 U. S. 2 Wall. 191 (17: 839); *Brobet* v. *Brock,* 77 U. S. 10 Wall. 519 (19:1002); *Sargent* v. *Sturm,* 23 Cal. 361; *St. John* v. *Kidd,* 26 Cal. 268-9; *Hebrard* v. *Jefferson G. & S. Min. Co.* 33 Cal. 290; *Brazier* v. *Clap.* 5 Mass. 10; *Merle* v. *Mathews,* 26 Cal. 467; *Green* v. *Ophir C. S. & G. Min. Co.* 45 Cal. 526.

Mr. Justice **Field** delivered the opinion of the court: [292

This was a suit to quiet the title of the plaintiff below, the Garfield Mining and Milling Company, to a lode mining claim in Montana. It was brought under an Act of the Territory providing for an action by any person in possession, by himself or his tenant, of real property, against any person who claims an estate [293] or interest therein adverse to him, for the purpose of determining such adverse claim, estate, or interest. (Compiled Statutes of 1887, § 366.) The complaint alleges that the plaintiff is a corporation organized and existing under the laws of the State of New York for the purpose of carrying on the business of mining and milling ores bearing gold, silver and other precious metals in Montana, and that it has complied with all the laws of the Territory relative to foreign corporations; that it is the owner of a certain quartz lode in the County of Lewis and Clarke, in the Territory, known as the Garfield lode or mining claim, which has been surveyed, and is designated upon the records of the office of the United States Surveyor-General of the Territory, and contains an area of twenty acres and $\frac{42}{100}$ of an acre, the metes and bounds of which are given; that the plaintiff and its predecessors in interest have been in the possession of and entitled to the lode ever since its discovery and location; that, notwithstanding its right to the possession, the defendant below, the plaintiff in error here, Auge O. Hammer, on or about the first of January, 1883, assumed to enter upon the premises and relocate the same, and caused the relocation to be recorded in the records of the county under the name of the Kinna lode; that he pretends to claim an interest or estate therein adversely to the plaintiff, and has made application to the United States land office at Helena, in the Territory, for a patent therefor; that the plaintiff has duly filed in that office its adverse claim to the premises, setting forth its nature and origin; and that the proceedings in the land office have been stayed until the final determination by the court of the right of possession to the premises.

Two other persons, by the names of Kinna and Bliss, are also made defendants, who, it is averred, assert some claim to the premises by a relocation at the same time with the defendant Hammer. The complaint alleges that the claims of all the defendants are without right, and that no one of them has any estate or interest in the mining ground or in any part thereof.

The prayer of the complaint is—

1. That the defendants may be required to [294] set forth the nature of their respective claims, and that all adverse claims be determined by a decree of the court;

2. That by such decree it be declared and adjudged that the defendants have not, nor has any of them, any interest or estate in or right to the possession of the premises or any part thereof, and that the title of the plaintiff to the same is good and valid, and that it is entitled to their possession; and,

3. That the defendants be forever debarred from asserting any claim whatever to the premises or any part thereof.

All the defendants filed demurrers to the complaint, on the ground that it did not state facts sufficient to constitute a cause of action. The defendant Hammer withdrew his demurrer and filed an answer. It does not appear from the record what disposition was made of the demurrer of the defendants Kinna and Bliss; but as they do not appear to have taken any further part in the defense of the action and are not mentioned in the judgment, or in the appeal taken to the supreme court of the Territory, it may be presumed that the action was discontinued as to them.

The answer of Hammer denies that the plaintiff is the owner of the lode described in the complaint or of any part of it, or that it is now or has been for a long time in possession thereof, or of any part thereof, or that it or its predecessors in interest have ever since the discovery and location thereof been in possession of it or of any part thereof, or entitled to the possession thereof, or that the defendant at any time assumed to relocate the premises, and to cause the relocation to be recorded in the records of the county, or that his claim is without right. The answer also sets up, that on the first of January, 1883, one Iner Wolf entered upon the premises described, the same being then vacant mineral land of the United States and discovered thereon a vein or lode of quartz bearing silver and other precious metals, and named the same the Kinna lode, which he then located in accordance with the requirements of the law, and had a notice of the location filed for record with the county recorder; that afterwards the defendant became the purchaser of the premises from Wolf, and has ever since been [295] their owner and entitled to their possession; and that whatever claim the plaintiff ever had to them became forfeited before the first of January, 1883, since which time it has not had any estate, title, or interest therein or possession thereof.

A replication to the answer having been filed, the issues raised were tried by a jury, which found a general verdict for the plaintiff; upon which the court entered judgment in the following form, after stating the pleadings, trial, and verdict:

"Wherefore, by virtue of the law and by reason of the premises, it is ordered, adjudged, and decreed that the plaintiff have judgment as prayed for in its complaint herein against the defendant, Auge O. Hammer, and that all adverse claim of the said defendant and of all persons claiming or to claim the premises in said complaint described, or any part thereof, through or under said defendant, are hereby adjudged and decreed to be invalid and groundless, and that the plaintiff is, and it is hereby declared and adjudged to be, the true and lawful owner of the land described in the complaint and every part and parcel thereof, and that the title thereto is adjudged to be quieted against all claims, demands, or pretensions of the said defendant; and said defendant is hereby perpetually estopped from setting up any claim thereto or any part thereof."

Then follows a description of the premises and an order that plaintiff recover costs. On appeal to the supreme court of the Territory, the judgment was affirmed, and to review the latter judgment the case is brought to this court.

As seen by this statement the suit is brought for special relief, and the judgment entered is such as a court exercising jurisdiction in equity alone could render. The courts of Montana, under a law of the Territory, exercise both common-law and equity jurisdiction. The modes of procedure in suits, both at law and in equity, are the same until the trial or hearing. As we said in *Basey* v. *Gallagher*, 87 U. S. 20 Wall. 670, 679 [22: 452, 453]: "The suitor, whatever relief he may ask, is required to state, 'in ordinary and concise language,' the facts of his case upon which he invokes the judgment of the court. But the consideration which [296] the court will give to the questions raised by the pleadings, when the case is called for trial or hearing, whether it will submit them to a jury, or pass upon them without any such intervention, must depend upon the jurisdiction which is to be exercised. If the remedy sought be a legal one, a jury is essential, unless waived by the stipulation of the parties; but if the remedy sought be equitable, the court is not bound to call a jury; and if it does call one, it is only for the purpose of enlightening its conscience, and not to control its judgment. The decree which it must render upon the law and the facts must proceed from its own judgment respecting them, and not from the judgment of others." The court might therefore have heard this case and disposed of the issues without the intervention of a jury. But, it having called a jury, the trial was conducted in the same manner as a trial of an issue at law. Such is the practice under the system of procedure in the Territory. *Ely* v. *New Mexico & Arizona R. Co.* 129 U. S. 291 [*ante*, 688]; *Parley's Park Silver Mining Co.* v. *Kerr*, 130 U. S. 256 [*ante*, 906]. The finding of the jury being accepted as satisfactory must be treated as if made by the court and, being general, as covering all the issues. The only questions, therefore, we can consider on this writ of error are those arising from the rulings in the admission and rejection of evidence, and those respecting the inferences deducible from the proofs made. These rulings, so far as we deem them of sufficient importance to be noticed, relate to the evidence of the plaintiff's incorporation; to the evidence of the location of the plaintiff's mining claim; to the evidence of the citizenship of the locators; and to the inferences to be drawn from the evidence of the plaintiff's prior possession of the premises.

1st. As to the evidence of the incorporation of the plaintiff. That consisted of certain records of the County of Lewis and Clarke, purporting to be a certificate of its incorporation in New York on the 11th day of October, 1881, duly acknowledged before a notary public of the City and County of New York, and authenticated by the certificate of the Secretary of State of New York, under his official seal, as being a correct copy of the duplicate original on file in his office, and also by a certificate un- [297] der seal of a commissioner of the Territory of Montana in New York as being found by him to be a correct copy after comparison of the

same with the original. The introduction of these records was objected to on the ground that the papers were not properly acknowledged or authenticated. The objection is not tenable. The acknowledgment attached to the certificate is in due form, and the authentication of the copy filed, by the Secretary of State of New York, the public officer charged with the custody of the original, or of one of the duplicate originals, under his official seal, is sufficient to entitle the copy to be placed on file for record in the office of the recorder of the county, and with the secretary of the Territory. The law of the Territory in force at the time with reference to foreign corporations provided that, before they proceeded to do business under their charter or certificate of incorporation in the Territory, they should "file for record with the secretary of the Territory, and also with the recorder of the county in which they are carrying on business, the charter or certificate of incorporation, duly authenticated, or a copy of said charter or certificate of incorporation." The law does not specify in what way the copy filed shall be authenticated, and, in the absence of any provision on that subject, the certificate of the official custodian, under the seal of his office, must be deemed sufficient. It does not appear that a copy of the certificate of incorporation was filed with the secretary of the Territory, but no objection to the introduction of the county records having been taken on that ground, it will be presumed that such filing existed, and, if required, it could have been readily shown. There was no error, therefore, in the ruling of the court admitting the records of the county showing the incorporation of the plaintiff in the State of New York.

2d. As to the evidence of the location of the mining claim of the plaintiff. That consisted of the record of the notice of location. To its introduction objection was taken that it did not contain such a description of the property as was required by law; and did not refer to such natural objects or permanent monuments as would identify the claim. The record is as follows:

[298] "*Garfield Lode. Notice of location.*

"Notice is hereby given that the undersigned, having complied with the requirements of chapter six of title thirty-two of the Revised Statutes of the United States and the local customs, laws, and regulations, has located fifteen hundred (1500) linear feet on the above named lode, situated in Vaughan mining district, Lewis and Clarke County, Montana Territory, and described as follows: Commencing at discovery stake, running fifty feet east to center stake; then three hundred feet north to stake 'A;' thence fifteen hundred feet west to stake 'B;' thence six hundred feet south to stake 'C,' and fifteen hundred feet east to stake 'D,' and three hundred feet north to place of commencement. This lode is located about fifteen hundred feet south of Vaughan's Little Jennie mine and described and located on the 4th day of July, 1880. "JULIUS HORST.
"E. F. HARDIN.

"TERRITORY OF MONTANA, } *ss:*
County of Lewis and Clarke,

"Julius Horst, being first duly sworn, says that he and his colocater are citizens of the United States, over the age of twenty-one years; that said location is made in good faith, and matters as stated in the foregoing notice of location by him subscribed are true.

"JULIUS HORST.

"Subscribed and sworn to before me this 26th day of August, 1880.

"[County Seal.] O. B. TOTTEN,
County Clerk."

Section 2324 of the Revised Statutes, which went into effect on the first of December, 1873, provides that records of mining claims subsequently made "shall contain the name or names of the locators, the date of the location, and such a description of the claim or claims located, by reference to some natural object or permanent monument as will identify the claim." These provisions, as appears on their [291 face, are designed to secure a definite description—one so plain that the claim can be readily ascertained. A reference to some natural object or permanent monument is named for that purpose. Of course the section means, when such reference can be made. Mining lode claims are frequently found where there are no permanent monuments or natural objects other than rocks or neighboring hills. Stakes driven into the ground are in such cases the most certain means of identification. Such stakes were placed here with a description of the premises by metes; and to comply with the requirements of the statute, as far as possible, the location of the lode is also indicated by stating its distance south of "Vaughan's Little Jennie mine," probably the best known and most easily defined object in the vicinity. We agree with the court below that the Little Jennie mine will be presumed to be a well known natural object or permanent monument until the contrary appears, where a location is described as in this notice, and is further described "as being 1500 feet south from a well known quartz location, and there is nothing in the evidence to contradict such a description, distance, and direction."

3d. As to the citizenship of the locators of the mining claim. The Revised Statutes open the mineral lands of the public domain to exploration and occupation and purchase, by citizens of the United States and persons who have declared their intention to become citizens. It is therefore objected here that there is no evidence of the citizenship of the original locators, but the objection is not tenable. The oath of one of the locators, accompanying the recorded notice of location, as to their citizenship, is *prima facie* evidence of the fact and it will be deemed sufficient until doubt is thrown upon the accuracy of his statement.

4th. As to the inferences deducible from the plaintiff's prior possession of the premises. The ruling of the court on that head is contained in its instructions to the jury. Though addressed to that body in an action seeking equitable relief, they indicate the judgment of the court as to the legal conclusions which should follow from the prior possession established. The evidence showed that the parties [300 through whom the plaintiff derives its title had located the lode mining claim in due form of law, and had within proper time recorded the

notice of location, and also tended to show that each year since the location, the original locators, or the plaintiff their successor, had caused work to be done upon the mine sufficient to retain its ownership and possession. Upon this evidence the court instructed the jury as follows:

"If you believe from the evidence in the case that prior to the 31st day of December, A. D. 1882, the plaintiff was in the quiet and undisputed possession of the premises designated in the complaint as the Garfield lode, the validity of the original location of which is not questioned in the pleadings or testimony, claimed by the defendant as the 'Kinna lode,' that the boundaries of said claim were so marked upon the surface as to be readily traced, and that theretofore there had been discovered within said boundaries a vein or lode of quartz or other rock in place bearing gold, silver, or other precious metals, then this constitutes a *prima facie* case for the plaintiff, which can only be overcome by the defendant by proof of subsequent abandonment or forfeiture or other devestiture and the acquisition of a better right or title by the defendant."

The supreme court of the Territory was of opinion that this instruction was erroneous so far as it states that the validity of the original location of the Garfield lode is not questioned in the pleadings, but considered that the error in this particular was not prejudicial to the defendant. We do not think that the statement mentioned was erroneous. The answer does not distinctly put in issue the validity of the original location; it confines its traverse to the existing right and ownership of the plaintiff in the whole of the mining claim, to its long possession of the premises, and to the possession of the plaintiff and its predecessors since the discovery and location of the mining claim, and then sets up the alleged forfeiture of the claim by the plaintiff and the defendant's relocation of it. Under these circumstances we are of opinion that the instruction was right in all [301] particulars. But we also agree that if error intervened it was not prejudicial to the defendant. The supreme court of the Territory treated the instructions precisely as though given in an action at law, trials of issues in suits in equity there being, as already stated, generally governed by the same incidents as trials of issues in actions at law. In that view, the instructions are not, in our judgment, open to any criticism. It is only as showing the ruling of the court respecting the inferences deducible from the prior possession of the plaintiff that we examine them, and on that subject they express the law correctly. If the trial were treated as of a feigned issue directed by the court, different considerations would arise. An erroneous ruling in that case would not necessarily lead to a disturbance of the verdict. *Barker* v. *Ray*, 2 Russ. 75; *Johnson* v. *Harmon*, 94 U. S. 371 [24: 271]; *Watt* v. *Starke*, 101 U. S. 247, 250, 252 [25: 826, 827]; *Wilson* v. *Riddle*, 123 U. S. 608, 615 [31: 280, 283].

As to the alleged forfeitures set up by defendant, it is sufficient so say that the burden of proving it rested upon him; that the only pretense of a forfeiture was that sufficient work, as required by law, each year, was not done on the claim in 1882; and that the evidence adduced by him on that point was very meager and unsatisfactory, and was completely overborne by the evidence of the plaintiff. *Belk* v. *Meagher*, 104 U. S. 279 [26: 735]. A forfeiture cannot be established except upon clear and convincing proof of the failure of the former owner to have work performed or improvements made to the amount required by law.

Judgment affirmed.

UNITED STATES, *Appt.*, [263]

v.

MARTHA INSLEY ET AL.

(See S. C. Reporter's ed. 263-266.)

United States not bound by Statutes of Limitation, nor by laches, at law, nor in equity.

1. The United States is not bound by any Statute of Limitation, nor barred by any laches of its officers, however gross, in a suit brought by it, as a sovereign government, to enforce a public right or to assert a public interest, unless Congress has clearly manifested its intention that it should be so bound.

2. This doctrine is applicable with equal force not only to the question of a Statute of Limitation in a suit at law, but also to the question of laches in a suit in equity.

[No. 221.]

Argued March 21, 1889. Decided April 8, 1889.

APPEAL from a decree of the Circuit Court of the United States for the District of Kansas, dismissing, on demurrer, a suit in equity, brought by the United States, to redeem land from a claim under a mortgage foreclosure. *Reversed.*

The facts are stated in the opinion.

Mr. **Wm. A. Maury**, *Assist. Atty-Gen.*, for appellant.

No counsel appeared for appellees.

Mr. Justice **Blatchford** delivered the opinion of the court:

This is a bill in equity, filed in the Circuit Court of the United States for the District of Kansas, by the United States against the heirs-at-law of Polly Palmer and the heirs-at-law and administratrix of Moses McElroy, seeking to redeem a parcel of land known as lot 1 in block 104, in the City of Fort Scott, in the State of Kansas, from a claim made thereto by the Palmer heirs under a mortgage. The bill was originally filed November 28, 1884. After a demurrer had been put in to it by two of the defendants, an amended bill was filed, on July 22, 1885. Some of the defendants interposed a general demurrer to the amended bill, and on a hearing the demurrer was, on December 14, 1885, sustained, and the bill was dismissed. From that decree the United States has appealed.

The material facts set forth in the amended [264] bill are these: On the 16th of October, 1869, the United States recovered a judgment at law, in the District Court of the United States for the District of Kansas, for $2,000, against Moses McElroy and Charles Bull. Two executions were issued thereon, and were returned unsatisfied. On the 7th of August, 1869, McElroy and his wife executed a mortgage for

$3,500 to Polly Palmer, on lots 1 and 3 in said block No. 104. On the 30th of May, 1871, Polly Palmer commenced a suit in a state court of Kansas against McElroy and his wife to foreclose the mortgage, and, on October 4, 1871, obtained a judgment of foreclosure for $3,764.16, which ordered that the property be sold to satisfy the mortgage. It was sold, and purchased by Polly Palmer. The sale was confirmed by the court, and, on January 4, 1872, a sheriff's deed for the property was made to her, which was duly recorded. At the time the foreclosure suit was commenced, the United States Marshal had made a levy on said property, under an execution issued on the judgment of the United States, and the said lots 1 and 3 had been advertised to be sold on June 6, 1871. On that day, lot 1 was sold to the United States; and on October 16, 1871, the District Court of the United States confirmed the sale, and ordered a deed to be made to the United States. In the foreclosure suit, the United States was not made a party, and did not appear. At the time that suit was commenced, the judgment of the United States was a lien on lots 1 and 3. Polly Palmer died in November, 1872, and McElroy died in 1881. On October 30, 1883, the United States received a deed for lot 1, from the marshal of the district, based on the sale of June 6, 1871, in accordance with the order of October 16, 1871, and has been ever since June 16, 1871, the owner of lot 1, with full right of possession thereof, subject only to the right of the heirs at law of Polly Palmer. The amount due to the estate of Polly Palmer on the mortgage of August 7, 1869, and on the judgment of foreclosure has been paid.

The bill alleges that the United States offers to pay the amount, if any, due on the mortgage, in order to redeem the property, waives an answer on oath, and prays that an account be [265] taken of the amount due; that lot 3 be first subjected to its payment; that an account be taken of the rents and profits of lot 1, and if they have been more than sufficient to satisfy the mortgage debt, the defendants be decreed to pay the excess to the United States; and that the United States be permitted to redeem lot 1, and the defendants be adjudged to deliver up its possession to the United States.

The decision of the circuit court, reported in 25 Fed. Rep. 804, proceeded upon the ground that, as the government in this case came into a court of equity claiming the same rights as a private individual, and the case did not involve any question of governmental right or duty, the ordinary rules controlling courts of equity as to laches should be enforced; and that, as the bill was filed more than 12 years after the sheriff's deed had been made to Polly Palmer, and more than 13 years after the sale on execution to the United States, the claim of the government was barred by its laches.

This decision of the circuit court was made in December, 1885, prior to the decisions of this court in the cases of *Van Brocklin* v. *Tennessee*, 117 U. S. 151 [29:845]; *United States* v. *Nashville, C. & St. L. R. Co.* 118 U. S. 120 [30:81]; and *United States* v. *Beebe*, 127 U. S. 338 [*ante*, 121]. These cases determine that the decree in the present case must be reversed.

In *Van Brocklin* v. *Tennessee*, p. 158 [847], this court said: "The United States do not and cannot hold property, as a monarch may, for private or personal purposes. All the property and revenues of the United States must be held and applied, as all taxes, duties, imposts, and excises must be laid and collected, 'to pay the debts and provide for the common defense and general welfare of the United States.'"

In the present case, the United States holds the title to the property in question, as it holds all other property, for public purposes and not for private purposes. So holding the title and the right of possession under their deed, it holds in the same manner, and for public purposes, the incidental right of redemption. In this view, the doctrine often laid down, and again enforced in *United States* v. *Nashville, C. & St. L. R. Co.* applies to this case. It was there said, p. 125 [83]: "It is settled beyond [266] doubt or controversy—upon the foundation of the great principle of public policy, applicable to all governments alike, which forbids that the public interests should be prejudiced by the negligence of the officers or agents to whose care they are confided—that the United States, asserting rights vested in them as a sovereign government, are not bound by any Statute of Limitations, unless Congress has clearly manifested its intention that they should be so bound. *Lindsey* v. *Miller*, 31 U. S. 6 Pet. 666 [8:538]; *United States* v. *Knight*, 39 U. S. 14 Pet. 301, 315 [10:465]; *Gibson* v. *Chouteau*, 80 U. S. 13 Wall. 92 [20:534]; *United States* v. *Thompson*, 98 U. S. 486 [25:194]; *Fink* v. *O'Neil*, 106 U. S. 272, 281 [27:196, 199]."

This doctrine is applicable with equal force, not only to the question of a Statute of Limitations in a suit at law, but also to the question of laches in a suit in equity. In *United States* v. *Beebe*, p. 344 [*ante*, 124], it was said: "The principle that the United States are not bound by any Statute of Limitations nor barred by any laches of their officers, however gross, in a suit brought by them as a sovereign government to enforce a public right or to assert a public interest, is established past all controversy or doubt." These views entirely cover the present case.

It was suggested in the decision of the court below, as a ground for applying to the United States the doctrine of laches, that the Government was not made a party to the foreclosure suit because it could not have been made such party except at its own will, and that it would be a hardship to the other parties to this suit to allow the Government to lie by for so many years, and then come into a court of equity to assert the rights sought to be maintained in this suit. It is a sufficient answer to this view to say, that the principle we have announced has long been understood to be the rule applicable to the government, and that it rests with Congress, and not with the courts, to modify or change the rule.

The decree of the Circuit Court is reversed and the case is remanded to that Court, with a direction to take such further proceedings as may be according to law and not inconsistent with this opinion.

Mr. Justice **Field** did not sit in this case or take any part in its decision.

[426] AMOS W. SHEPHERD, *Plff. in Err.*,
v.
THE BALTIMORE AND OHIO RAILROAD COMPANY.

(See S. C. Reporter's ed. 426-434.)

Damages against a railroad company for laying its track upon a street—Ohio statute—owner of property near the street entitled to damages—diminution of value—rule of damages—temporary damage—fact assumed.

1. Under the Ohio statute making a railroad company which lays its track upon a street responsible for injuries to private property, the right to recover damages for such injuries is not limited to owners of property immediately upon the street occupied by the track or structures of the company.
2. The owner of property near to the street is entitled to the remedy given by the statute, if the injury to it is the direct and necessary result of the occupancy of the street by the railroad company.
3. When the diminution of the value of the property can be fairly attributed to such occupancy and use of the street, the company is liable for the injury.
4. Where the property has been depreciated in value by reason of the street's being occupied by a railroad company, such depreciation is ascertained by the difference in its value before and its value after the final location and construction of the road.
5. The temporary injury sustained on account of obstructions placed in the street during the building of the railroad constitutes a cause of action apart from the claim under the statute for permanent depreciation of the property.
6. Where the issue as to the injury was the real point of inquiry on the trial, the rulings of the court excluding proper evidence upon that issue will not be sustained for want of affirmative proof in the record of plaintiff's ownership of the property.

[No. 213.]

Argued March 20, 21, 1889. Decided April 8, 1889.

IN ERROR to the Circuit Court of the United States for the Southern District of Ohio, to review a judgment in favor of defendant in an action to recover damages against a railroad company for the construction of its road in a public street. *Reversed.*

[427] Statement by *Mr. Justice* **Harlan:**

This action was brought to recover damages for injuries alleged to have been done by the defendant in error to certain improved lots on Union Street, in Bellaire, Ohio, of which the plaintiff in error, who was the plaintiff below, claims to be the owner. It is based upon section 3288 of the Revised Statutes of Ohio, which provides: "If it be necessary, in the location of any part of a railroad, to occupy any public road, street, alley, way, or ground of any kind, or any part thereof, the municipal or other corporation or public officers or authorities, owning or having charge thereof, and the company, may agree upon the manner, terms, and conditions upon which the same may be used or occupied; and if the parties be unable to agree thereon, and it be necessary, in the judgment of the directors of such company, to use or occupy such road, street, alley, way, or ground, such company may appropriate so much of the same as may be necessary for the purposes of its road, in the manner and upon the same terms as is provided for the appropriation of the property of individuals; but every company which lays a track upon any such street, alley, road, or ground shall be responsible for injuries done thereby to private or public property, lying upon or near to such ground, which may be recovered by civil action brought by the owner, before the proper court, at any time within two years from the completion of such track." R. S. Ohio, p. 851. This is, without material change, the first section of the Act of April 15, 1857, entitled "An Act to Amend the Act Entitled 'An Act to Provide for the Creation and Regulation of Incorporated Companies in the State of Ohio,' Passed May 1, 1852, and to Regulate Railroad Companies." Laws of Ohio, 1857, p. 133.

The lots in question are situated on the west [428] side of Union (formerly Water) Street, thirty-three feet south from Thirty-First (formerly First) Street, and extend back one hundred and twenty feet to an alley, running from Crescent Street to Thirty-First Street. Upon the lots is a two-story brick building, the first floor being used as a dry-goods store and the rest of the building as a hotel. The railroad company—with the assent, as we assume, of the municipal authorities of Bellaire—constructed its road in Thirty-First Street, upon arches springing from stone pillars about twenty-seven feet apart, each pillar being twelve feet long, six feet thick, and thirty feet high. Two of the pillars are in Union Street, at the intersection of that street with Thirty-First Street, each of them extending fifteen inches within the line of the sidewalk on each side of the roadway of Union Street through Thirty-First Street. It took from three to four years to build the railroad in the latter street. During that period Union Street for about one hundred feet south from Thirty-First Street towards Crescent Street (which is parallel to and the next street south from Thirty-First Street) was obstructed by stone, timber, rock, derricks, steam engines, barrels, guy ropes, etc., such obstructions extending in front of and past the lots in question. For a great part of the time the railroad was being built teams could not get to this property because of these obstructions, and at times persons could hardly get to it or pass by it on foot. Before the railroad was built in Thirty-First Street the property was worth from $9,000 to $10,000, the store bringing an annual rent of from $400 to $500, and the whole building $1,000; afterwards it was not worth more than from $4,000 to $5,000, and the rental was reduced one half.

These facts having been proven by a witness on behalf of the plaintiff, subject to objection to their competency, the court, on motion of the defendant, excluded from the consideration of the jury so much of the evidence as related to the depreciation of the value of the property by reason of the above obstructions, and all the testimony relative to the diminution of its rental value.

The plaintiff then made a formal offer to [429] prove that the building of the railroad in Thirty-First Street was in progress three or four years, during which time the company obstructed Union Street, in front of his property, with materials of all kinds used in building the railroad, so that access to his property was seriously obstructed; that because of such obstruction his tenants occupying the premises left them,

and he was unable to rent them, and by reason thereof he lost their rental value, amounting to at least two thousand dollars; that access from Thirty-First Street to the alley in the rear of his property was entirely cut off during the building of the railroad; that the alley was too narrow for teams coming in from the other direction to turn, and that he had a stable at the rear of his property and abutting on the alley, which became entirely untenantable during the construction of the railroad; that the building of the pillars and archway connecting the same at the intersection of Union and Thirty-First Streets damaged the access to his property from Union Street, and the building of the railroad in Thirty-First Street, west of Union Street, damaged his access to his property through the alley in the rear, and depreciated its market value in the sum claimed in the petition. The court refused to admit this proof, and ruled that damages to the rental value of the property were not recoverable in this action, nor damages resulting from the placing of obstructions on Union Street in front of the property, during the time of the building of the railroad, and that no recovery could be had by him for damages to his property by reason of the building of the railroad in Thirty-First Street.

The court further decided that section 3283 of the Revised Statutes of Ohio does not enlarge or extend the liabilities of railroad companies, but only preserves the right of property owners to recover for injuries done to their property by the building of railroads under agreements made with municipal or other corporations or public officers or authorities, as provided in that section, precisely as if no such agreements had been made.

These rulings having been made, and duly [430] excepted to by the plaintiff, the court, on defendant's motion, gave a peremptory instruction to the jury to return a verdict in its behalf, which was done.

Mr. **John W. Herron,** for plaintiff in error:

Plaintiff was entitled to have the question and amount of his damages passed upon by the jury.

Little Miami R. Co. v. *Hambleton*, 40 Ohio St. 501.

The interest of an adjacent land owner in a street is well defined.

Bingham v. *Doane*, 9 Ohio, 168; *Crawford* v. *Delaware*, 7 Ohio St. 459; *Cincinnati & S. G. A. Street R. Co.* v. *Cumminsville*, 14 Ohio St. 523; *Scioto Valley R. Co.* v. *Lawrence*, 38 Ohio St. 41.

Railroads which obtain the use of streets are responsible for injuries to private property lying upon or near such street.

Columbus, S. & C. R. Co. v. *Mowatt*, 35 Ohio St. 284; *Columbus, H. V. & T. R. Co.* v. *Gardner*, 11 West. Rep. 264, 45 Ohio St. 309; *Rude* v. *St. Louis*, 12 West. Rep. 238, 93 Mo. 415.

Messrs. John K. Cowen, **Hugh L. Bond, Jr.,** and **E. J. D. Cross,** for defendant in error:

The right of transit in the use of public highways is subject to such incidental, temporary or partial obstruction as manifest necessity requires.

Clark v. *Fry*, 8 Ohio St. 358.

The statute, with the proviso, left the property owner's rights of action unabridged, but it in no way added to them.

Pa. R. Co. v. *Lippincott*, 8 Cent. Rep. 818, 116 Pa. 472; *Pa. R. Co.* v. *Marchant*, 12 Cent. Rep. 261, 119 Pa. 541; *Rochette* v. *Chicago, M. & St. P. R. Co.* 32 Minn. 201; 17 Am. & Eng. R. Cas. 192, and note; *Proprietors of Locks & Canals* v. *Nashua & L. R. Corp.* 10 Cush. 385.

The mere fact that the plaintiff's property lies nearer than that of some others does not make the partial obstruction a special damage to him.

Blackwell v. *Old Colony R. Co.* 122 Mass. 1; *Proprietors of Locks & Canals* v. *Nashua & L. R. Corp.*, and *Rochette* v. *Chicago, M. & St. P. R. Co. supra; Caledonian R. Co.* v. *Ogilvy*, 2 Macq. 229, 29 Eng. L. & Eq. 22; *Pierce* v. *Dart*, 7 Cow. 609; *Houck* v. *Wachter*, 34 Md. 265; *Sargent* v. *Ohio & M. R. Co.* (Super. Ct. of Cincinnati), 1 Handy, 52, 59; Wood, Nuisances, chap. 18, Review of Cases; *Pittsburgh & L. E. R. Co.* v. *Jones*, 1 Cent. Rep. 884, 111 Pa. 204.

Mr. Justice **Harlan** delivered the opinion of the court:

The express requirement that every railroad company occupying a street or other public ground, under an agreement with the municipal or other authorities, owning or having charge thereof, "shall be responsible for injuries done thereby to private or public property lying upon or near to such ground," leaves little room for construction. The right to recover damages for such injuries is not limited to owners of property immediately upon the street occupied by the track or other structures of the railroad company. If the Legislature had intended to restrict the right of action given by the statute to owners of the latter class of property, the words "or near to" would not have been used. The manifest purpose was to place those whose property was "near to" any public street thus occupied upon an equal- [431] ity, in respect to the right to sue, with those whose property abutted on the street.

In *Railroad Co.* v. *Mowatt*, 35 Ohio St. 284, 287 which was an action to recover damages for injuries to private property not immediately upon the street occupied by the railroad track, the court held the limitation of two years prescribed by the statute to be applicable, because the street was occupied under an agreement with the municipal authorities, and because the premises were "near to" that street. But an adjudication more directly in point is *Railway Co.* v. *Gardner*, 45 Ohio St. 309, 317 [11 West. Rep. 264], which was made after the decision in the court below of the case now before us. The property there alleged to have been injured was immediately upon the street in which the railroad track was maintained under municipal authority. Referring to *Parrot* v. *Railroad Co.* 10 Ohio St. 624, as not controlling the case then before the court, it was said: "For, whereas the court declares in that case that the owner of such lot has no more right to recover damages of the company than any citizen who resides, or may have occasion to pass, so near the street and railroad as to be subjected to like discomforts, the Act in question expressly

authorizes an action and recovery for injuries done by laying a track upon any such street or ground to private or public property 'lying upon or *near* to the street or ground upon which the track is laid.' It seems that to entitle a property owner to recover for injury to his property, it need not necessarily be situated *upon* the street occupied by the track. The statute reaches beyond the decision in prescribing a remedy for a party whose property is injured by the location and operation of a railroad track through the street by a railroad corporation. . . . The provision in force at the time of the injury complained of in that case, of which section 3283 is an amendment, created no such remedy for land owners as we are considering."

This interpretation of the statute is, in our judgment, the only one justified by its words, although it may sometimes be difficult to determine whether particular property, alleged to have been injured by the placing of a railroad [432] track or structure in a public street, is, within the meaning of the statute, "near to" that street. It is certain, however, that property is "near to" the street, so as to entitle the owner to avail himself of the remedy given by the statute, if the injury to it is the direct and necessary result of the occupancy of the street by the track or other structures of a railroad company. And an injury for which the company is liable, under the statute, arises when the diminution of the value of the property can be fairly attributed to such occupancy and use of the street. In *Grafton* v. *Baltimore & O. R. Co.* 21 Fed. Rep. 309, which was an action under this statute for injury done by the obstructions here in question, *Mr. Justice* Matthews said: "There does not appear to be any ground in the words or intention of the Act, for a distinction between temporary injuries to the use, and permanent injuries to the value, of the property injured; and, in the absence of any ambiguity, the statute must be taken to mean what it plainly says; and, there being no sufficient reason to the contrary, must be so construed that the railroad company, in the case contemplated shall be held responsible for all injuries of every description done by its work to the property of the plaintiffs." It is scarcely necessary to say that the same rule as to compensation must be applied in the case of property "near to" any street so occupied by a railroad company. The injury, in a case of that kind, may not, in every case, be easily ascertained; but the right of the owner, under the statute, to full compensation for it, is as clear as is the right of the owner of property abutting on the street, to be compensated for any substantial injury resulting from its occupancy by a railroad.

One of the questions discussed at the bar was as to the right of the plaintiff to recover damages in this action on account of the obstructions placed in Union and Thirty-First Streets during the building of the railroad, whereby access to his property by way of Union Street, as well as through the alley in the rear, was materially obstructed. We are of opinion that the temporary injury sustained by the plaintiff on account of such obstructions cannot properly be said to have been done to the property itself, within the meaning of the statute. The inquiry in every case, under the statute in ques- [433] tion, is whether the property alleged to be injured has been depreciated in value by reason of the street's being occupied by a railroad company, and that question is solved by ascertaining the difference in its value before and its value after the final location and construction of the railroad. *R. Co.* v. *Gardner*, 45 Ohio St. 309, 322 [11 West. Rep. 264]. The authority given to the railroad company to place its track in Thirty-First Street carried with it authority to obstruct its use temporarily, so far as the building of the track required it to be done. The rule, in Ohio, applicable in such a case is thus stated in *Clark* v. *Fry*, 8 Ohio St. 358; "The right of transit in the use of public highways is subject to such incidental, temporary, or partial obstructions as manifest necessity requires, and among those are the temporary impediments necessarily occasioned in the building and repair of houses on lots fronting upon the streets of a city, and in the construction of sewers, cellars, drains, etc. These are not invasions, but qualifications of the right of transit on a public highway, and the limitation on them is that they must not be unnecessarily and unreasonably interposed or prolonged."

But the plaintiff's special damages, if any, on account of such obstructions, constituted a cause of action apart from his claim, under the statute before us, for damages on account of the depreciation of the value of the property itself, as the result of the permanent occupancy of the street with a railroad track. And here the point is made that the petition is not so framed as to cover those special damages. In this view we do not concur. Its allegations are broad enough to admit evidence in support of the claim for damages on account of any unnecessary obstruction of the plaintiff's access to his property during the building of the railroad track in Thirty-First Street, as well as of the claim for injury done to the permanent value of the property. The plaintiff could have been required to separately state his two causes of action; but no motion to that end having been made in the court below, that objection was waived. *McKinney* v. *McKinney*, 8 Ohio St. 423; *Hartford Twp.* v. *Bennett*, 10 Ohio St. 443; Civil Code, Ohio, §§ 80, 81, 86. Nor, so far as the record shows, were the rul- [434] ings of the court below based in any degree upon the ground that the petition did not sufficiently set forth a separate cause of action for special damages on account of the temporary obstructions referred to.

The point was pressed at the bar, that, as no proof was introduced by the plaintiff to overcome the denial by the defendant in its answer of his ownership of the property in question, any errors committed by the court as to other issues made by the pleadings are immaterial, since the peremptory instruction was proper in view of the plaintiff's failure to prove his ownership. This objection is too technical and cannot be sustained, as the property is repeatedly referred to in the record as being owned by the plaintiff, and the court so assumed in its rulings. After the exclusion of competent evidence introduced and offered in behalf of the plaintiff upon the issue as to the injury done to the property, his ownership being unquestioned except by a formal denial in the answer, and

the issue as to the injury being treated as the real point of inquiry, we ought not to affirm for the want of affirmative proof in the record of such ownership.

It results from what we have said that the plaintiff was entitled to go to the jury upon the issue as to the damage he sustained, if any, by reason of the access to his property during the construction of the track being unnecessarily and materially obstructed by the company, as well as upon the issue as to the depreciation, if any, in the value of his property, as the direct and necessary result of the permanent occupancy of Thirty-First Street by the track and structures of the company. Evidence was offered which tended to support those issues, upon his part, and was improperly excluded.

The judgment is reversed with directions for a new trial, and for further proceedings consistent with this opinion.

---

[343] *Ex parte:*
In the Matter of GON-SHAY-EE,
Petitioner.

(See S. C. Reporter's ed. 343-353.)

Murder by an Indian in Territory—crime how triable—territorial law—jurisdiction of district court.

1. Under the Act of March 3, 1885, 23 Stat. at L. 385, the crime of murder, committed by an Indian within a Territory of the United States, is an offense against the laws of the Territory, and such Indian is subject for such crime, not to the criminal laws of the United States, but to the laws of the Territory.
2. The statute makes no distinction in regard to whether the crime was committed by the Indian on or off an Indian Reservation.
3. Such offense should be tried by the District Court of the United States, sitting to administer the laws of the Territory and exercising the functions of a territorial court, and not while exercising its functions as a court of the United States administering its laws.
4. The indictment, the venue of the trial, and the jury are to be according to the territorial laws.

[No. 7, Original.]

Argued March 18, 1889. Decided April 15, 1889.

PETITION for writ of *habeas corpus* to the Marshal of the United States for the Territory of Arizona, commanding him to produce the petitioner who is held by him in prison under sentence of death for murder. *Ordered that the* habeas corpus *issue.*

The facts are stated in the opinion.

Messrs. S. F. Phillips, **W. H. Lamar** and **J. G. Zachry,** for petitioner.

Mr. **G. A. Jenks,** *Solicitor-Gen.,* for respondent.

Mr. Justice **Miller** delivered the opinion of the court:

This is a petition for a writ of *habeas corpus* to be directed to the Marshal of the United States for the Territory of Arizona, who, it is alleged, holds the petitioner under a judgment of the District Court of the United States for the Second Judicial District of that Territory, which condemned him to death for the crime of murder. This crime is alleged in the indictment to have been committed by the defendant, an Apache Indian, within said district, naming no county or other location.

The allegation of the petitioner is that the court which tried him had not at that time, and in the mode of trial which was pursued, any jurisdiction of the case against him. It is argued by counsel and alleged in the petition [344] that the District Courts of the United States in the Territory of Arizona, as in all other Territories, have two distinct jurisdictions: that in the one they sit to exercise the powers and to try the same class of cases that the Circuit Courts of the United States do within the States and in the same manner, while in the other they sit as courts having jurisdiction of the ordinary contests between private parties and of criminal offenses arising under the territorial laws.

The controversy in this case seems to turn upon the question whether the offense for which Gon-shay-ee was tried was an offense against the laws of the United States, and was of that character which ought to have been tried by the court sitting to try such cases, or whether it was an offense against the laws of the Territory, and should have been tried under those laws and by the court sitting to administer justice under them. The petitioner alleges that the offense with which he was charged was of the latter class, but that he was tried by the court while it was exercising its functions under the former.

The record of the case commences with the following statement of the finding of the indictment:

"IN THE DISTRICT COURT OF THE SECOND JUDICIAL DISTRICT, COUNTY OF MARICOPA, TERRITORY OF ARIZONA.

"May Term, A. D. 1888, sitting for the trial of all cases arising under the Constitution and laws of the United States, and having and exercising the same jurisdiction in all cases arising under the Constitution and laws of the United States, as is vested in the Circuit and District Courts of the United States, at a term thereof held at the City of Phœnix, in the County of Maricopa, in said district and Territory, on the 29th day of May, A. D. one thousand eight hundred and eighty-eight.

"THE UNITED STATES OF AMERICA *vs.* GON-SHAY-EE. } Indictment.

"SECOND JUDICIAL DISTRICT, *Territory of Arizona.*

"The grand jurors of the United States of America, within and for the Second Judicial District, Territory of Arizona, being duly im- [345] paneled, sworn, and charged to inquire within and for the body of said district, of all offenses committed therein against the United States of America, upon their oath present: That Gon-shay-ee, an Apache Indian, late of the Second Judicial District, Territory of Arizona, with force and arms, in said district and Territory, on or about the 5th day of June, A. D. one thousand eight hundred and eighty-eight, and before the finding of this indictment, did then and there feloniously, wilfully, deliberately, premeditately, and with malice aforethought, make an assault on a human being, to wit, William Deal, in the peace of the United States then and there being, and with a certain gun, which then and there was loaded with gunpowder and a leaden bullet, and by him, the

said Gon-shay-ee, had and held in his hands, he, the said Gon-shay-ee, did then and there feloniously, wilfully, deliberately, premeditately, and with malice aforethought, shoot off and discharge at, to, against, and upon the said William Deal, thereby and by thus striking the said William Deal with the said leaden bullet, inflicting on and in the body of him, the said William Deal, one mortal wound, of which mortal wound the said William Deal then and there instantly died.

"And so the grand jurors aforesaid, upon their oath aforesaid, do say that the said Gon-shay-ee, an Apache Indian, in the manner and form aforesaid, and at the time and place aforesaid, did him, the said William Deal, feloniously, willfully, deliberately, premeditately, and with malice aforethought, kill and murder, against the peace of the United States and their dignity, and contrary to the form of the statute in such case made and provided.

"O. T. ROUSE,
"*United States Attorney.*"

The record of the final judgment of the court is in the following language:

[346] "UNITED STATES OF AMERICA.
"DISTRICT COURT, SECOND JUDICIAL DISTRICT OF ARIZONA.
Having and exercising the same jurisdiction under the Constitution and laws of the United States as is vested in the District and Circuit Courts of the United States.

"Regular May Term, A. D. 1888.
"June 14, A. D. 1888.

"Present: Hon. Wm. W. Porter, District Judge.

"UNITED STATES OF AMERICA, Plaintiff, *vs.* GON-SHAY-EE, Defendant. } Convicted of Murder.

"The defendant, being present in open court in person, and by his counsel, H. N. Alexander and L. H. Chalmers; the United States attorneys, O. T. Rouse and Joseph Campbell, present on the part of the United States. And this being the time heretofore fixed for passing judgment on the defendant in this case, the defendant Gon-shay-ee was duly informed by the court of the nature of the indictment found against him for the crime of murder committed on or about the 5th day of June, A. D. 1887; of his arraignment, and plea of 'Not guilty as charged in the indictment;' of the trial, and the verdict of the jury on the 4th day of June, A. D. 1888, guilty of murder as charged in the indictment.

"The defendant was then asked if he had any legal cause to show why judgment should not be pronounced against him; and no sufficient cause being shown or appearing to the court, thereupon the court renders its judgment that, whereas you, Gon-shay-ee, having been duly convicted in this court of the crime of murder, it is found by the court that you are so guilty, of said crime. It is considered and adjudged, and the judgment of the court is, that you, Gon-shay-ee, be removed hence to the county jail of Maricopa County, or some other place of secure confinement, and there be securely kept until Friday, the 10th day of August, A. D. 1888, and on that day you be taken by the United States Marshal of the Territory of Arizona, to and within the yard of the jail of said Maricopa County, Arizona, and [347] between the hours of nine o'clock A. M. and five o'clock P. M., of that day, by said marshal, you be hanged by the neck till you are dead."

It is very clear from these transcripts of the proceedings in the court below that on this trial it proceeded and considered itself as acting as a court for the trial of offenses arising under the Constitution and laws of the United States, and as administering them with the same powers as those vested in the Circuit and District Courts of the United States generally. The grand jurors are described as "the grand jurors of the United States of America within and for the Second Judicial District, Territory of Arizona, being duly impaneled, sworn, and charged to inquire within and for the body of said district, of all offenses committed therein against the United States."

The court was held in the City of Phœnix, in the County of Maricopa, and the offense is described as having been committed within the Second Judicial District of the Territory, without any further reference to the county in which the act was done. In the final judgment of condemnation it is declared to be rendered in the "District Court, Second Judicial District of Arizona, having and exercising the same jurisdiction under the Constitution and laws of the United States as is vested in the District and Circuit Courts of the United States." Both the grand and the petit jurors were summoned by the Marshal of the United States, and the execution of the sentence was imposed upon that officer, who now holds the prisoner in custody under it.

If the court which tried the prisoner had been sitting for the trial of offenses committed against the territorial law, all this would have been different. The grand jury would have been summoned for the county in which the act was committed, and from the body of that county, by its sheriff; and the case would have been tried by the court sitting in that county, unless for exceptional reasons, which do not appear in this case. The prisoner would, on conviction, have been held by the sheriff, who would have had the execution of the sentence committed to him under a warrant from the court.

All these circumstances are so variant, in the nature of the jurisdiction and the mode in [348] which it must be exercised, that the conviction of the prisoner under the one mode by the law prescribed for the procedure under the other cannot be held to be within the power of the court which proceeded under the wrong jurisdiction. That there exists this system of a distinct jurisdiction, administered by the same court, in the Territory of Arizona, as it does in nearly all the others, is undoubted. The language of section 1910 of the Revised Statutes points very clearly to this distribution of the functions of the courts of the United States in the Territories. It reads as follows:

"Each of the district courts in the Territories mentioned in the preceding section shall have and exercise the same jurisdiction, in all cases arising under the Constitution and laws of the United States, as is vested in the Circuit and District Courts of the United States; and the

first six days of every term of the respective district courts, or so much thereof as is necessary, shall be appropriated to the trial of causes arising under such Constitution and laws; but writs of error and appeals in all such cases may be had to the supreme court of each Territory, as in other cases."

It may be safely assumed that the practice of the territorial courts, from their first organization, has been to observe this separation of their functions. The payment of the expenses of the court, while sitting, as it declares in the caption above quoted, to administer the laws of the United States, with the same jurisdiction as is vested in the Circuit and District Courts of the United States, is made by the Federal Government, on accounts kept and rendered by its officers; while the same courts when held within the different counties of the Territories to administer the territorial laws, whether criminal or civil, are paid by the county, or in some other mode prescribed by the Legislature of the Territory.

The following language was used by this court in *Ex parte Crow Dog*, 109 U. S. 556, 560 [27: 1030, 1032]:

"The district court has two distinct jurisdictions. As a territorial court it administers the local law of the territorial government; as invested by Act of Congress with jurisdiction to administer the laws of the United States, it has [349] all the authority of circuit and district courts; so that, in the former character, it may try a prisoner for murder committed in the Territory proper, under the local law, which requires the jury to determine whether the punishment shall be death or imprisonment for life (Laws of Dakota, 1883, chap. 9); and, in the other character, try another for murder committed within the Indian reservation, under a law of the United States, which imposes, in case of conviction, the penalty of death. Section 2145 of the Revised Statutes extends the general laws of the United States as to the punishment of crimes committed in any place within their sole and exclusive jurisdiction, except the District of Columbia, to the Indian country, and it becomes necessary, therefore, to inquire whether the locality of the homicide, for which the prisoner was convicted of murder, is within that description."

The question in this case is whether the offense charged against Gon-shay ee was one committed against the laws of the United States, within the meaning of the distinction which we have been taking; or whether it was an offense against the laws of the Territory, to be punished by a court proceeding under its laws. It may be conceded that prior to the Statute of 1885, so far as Indians could be punished for offenses of this kind in any court, either federal or territorial, the jurisdiction would belong to the one sitting under the first branch and exercising the judicial functions appropriate thereto. It is clearly otherwise by the Act of March 3, 1885 (23 Stat. at L. 385). The only portion necessary for our present consideration is the ninth section which reads as follows:

"That immediately upon and after the date of the passage of this Act, all Indians, committing against the person or property of another Indian or other person any of the following crimes, namely: murder, manslaughter, rape, assault with intent to kill, arson, burglary, and larceny, within any Territory of the United States, and either within or without an Indian Reservation, shall be subject therefor to the laws of such Territory relating to said crimes, and shall be tried therefor in the same courts and in the same manner, and shall be subject to the same penalties, as are all other persons charged with the commission of said crimes re- [350] spectively; and the said courts are hereby given jurisdiction in all such cases; and all such Indians committing any of the above crimes against the person or property of another Indian or other person within the boundaries of any State of the United States, and within the limits of any Indian Reservation, shall be subject to the same laws, tried in the same courts and in the same manner, and subject to the same penalties, as are all other persons committing any of the above crimes within the exclusive jurisdiction of the United States."

This is the last section of the Indian appropriation bill for that year, and is very clearly a continuation of the policy upon which Congress entered several years previously, of attempting, so far as possible and consistent with justice and existing obligations, to reduce the Indians to individual subjection to the laws of the country and dispense with their tribal relations. This matter was fully commented upon in the case of *Crow Dog*, already referred to, and in *United States* v. *Kagama*, 118 U. S. 375 [30: 228], in which the whole history of the relations between the United States and the Indians was discussed.

The latter case arose under the Statute of 1885, now under consideration, which was construed in the opinion of the court, and the distinction clearly pointed out between offenses committed against the laws of the United States within the limits of an organized State of the Union, and those committed within the Territories. It is there declared that the enactment is clearly separable into two distinct definitions of the conditions under which Indians may be punished for the same crimes. The first is where the offense is committed within the limits of a territorial government, whether on or off an Indian Reservation, and "The second is where the offense is committed by one Indian against the person or property of another, within the limits of a State of the Union, but on an Indian Reservation."

In that case the offense was charged to have been committed within the boundaries of a State of the Union, and the Indian was tried in the Circuit Court of the United States for the District of California, from which a certificate of a division of opinion was made to this court, [351] embracing the question whether a murder committed by an Indian on the Reservation of Hoopa Valley in that State could be tried in that court. We held that the statute gave this jurisdiction, and that it was constitutional. Incidentally, however, in remarking upon cases of crime committed by Indians in the Territories, the court said that "In this class of cases the Indian charged with the crime shall be judged by the laws of the Territory on that subject and tried by its courts."

The distinction between the trial in such cases by a court sitting as a Circuit Court of the United States to try offenses against the federal laws, and that in which it sits as a territorial court to punish crimes against the laws of the Territory, was not clearly stated in that opinion. We have already shown that such a distinction exists, and have little hesitation in holding that under the Act of 1885 the case of Gon-shay-ee should have been considered as an offense against the laws of the Territory. That statute evidently intended to provide for the punishment of all cases of "murder, manslaughter, rape, assault with intent to kill, arson, burglary, and larceny," committed by Indians within any Territory of the United States, whether within or without an Indian Reservation, and the declaration is clear that they "shall be subject therefor to the laws of such Territory relating to said crimes, and shall be tried therefor in the same courts and in the same manner, and shall be subject to the same penalties, as are all other persons charged with the commission of said crimes respectively."

These Indians, then, are subjected by this statute not to the criminal laws of the United States but to the laws of the Territory. The statute does not even define the crimes of murder, manslaughter, etc., but this must be governed by the laws of the Territory, so far as they furnish any definition of the crime. There is no language which declares that they shall be tried in the courts of the United States under the same circumstances as similar offenses committed by Indians within the States; but the second provision, which prescribes the punishment of the same offenses when committed by Indians if within the boundaries of any State, and within the limits of any Indian Reservation, declares that they "shall be subject to the same laws, tried in the same courts, and in the same manner and subject to the same penalties, as are all other persons committing any of the [352] above crimes within the exclusive jurisdiction of the United States."

This phrase, "within the exclusive jurisdiction of the United States," is well understood as applying to the crimes which are committed within the premises, grounds, forts, arsenals, navy-yards, and other places within the boundaries of a State, or even within a Territory, over which the Federal Government has by cession, by agreement, or by reservation exclusive jurisdiction. Those cases are tried by Circuit or District Courts of the United States, administering the laws of the United States, and not by the courts of the State or those of the Territory. The framers of this Act were very careful, in this part of the statute, where the offense was committed within the territorial limits of a State, to declare that a violation of the laws of the United States in regard to these crimes of murder, etc., should be tried in the courts exercising the jurisdiction of the United States to punish offenses against the United States.

With regard to the Territories, however, it is different. The declaration is that the Indians shall be tried by the courts of the Territory, and according to its laws, and shall be subject to the penalties which those laws prescribe. They are to be tried in the same manner and in the same courts as are all other persons charged with the commission of said crimes respectively, and the said courts are given jurisdiction in all such cases. It will be observed also that this part of the statute makes no distinction in regard to whether the crime was committed by the Indian on or off an Indian Reservation.

We do not entertain any doubt that this part of the statute was enacted to transfer to the territorial courts established by the general government, as all courts of general jurisdiction are in the Territories, the jurisdiction to try the crimes described in it under the territorial laws, when sitting as and exercising the functions of such territorial court, as pointed out in the case of *Crow Dog*.

The distinctions incident to this mode of trial [353] have already been indicated. They are important, relating to the jurisdiction, and concerning the life and the liberty of the party, against whom a crime is charged. Whether a man shall be tried in the county where the offense was committed, or carried to some other county, perhaps hundreds of miles distant, is a matter of much consequence; it is of the venue of the trial. Whether he shall be tried by a jury summoned by the Marshal of the United States from the whole Territory, or from a section of it, amounting possibly to one third of its extent, or by a jury of the county in which the act was done by the sheriff of the county, is of much moment to him; so also as to whether he shall be indicted by a grand jury summoned to serve for the county, and residents of the county, or by such a body summoned from the whole Territory.

It is of consequence that in this new departure which Congress has made, of subjecting the Indians, in this limited class of cases, to the same laws which govern the whites within the Territories where they both reside, the Indian shall at least have all the advantages which may accrue from that change, which transfers him, as to the punishment for these crimes, from the jurisdiction of his own tribe to the jurisdiction of the government of the Territory in which he lives.

We are of opinion that the writ of habeas corpus *should issue as prayed for in this case; and it is so ordered.*

Ex parte:

In the Matter of CAPTAIN JACK, [353]
Petitioner.

(See S. C. Reporter's ed. 353-354.)

Decision followed—jurisdiction of district court.

1. The same decision was made in this case as in the preceding case of *Ex parte Gon-shay-ee.*
2. The differences between this case and the preceding one, that the petitioner was sentenced to imprisonment in the Penitentiary of Ohio and that the crime was committed within the judicial district and not upon an Indian Reservation, have no influence in the decision of the question as to the jurisdiction of the court.

[No. 8, Original.]

Argued March 18, 1889. Decided April 15, 1889.

PETITION for writ of *habeas corpus* to the warden or other person having charge of the State Prison at Columbus, Ohio, to produce the petitioner who is confined in the Ohio State Penitentiary by the sentence of the District Court of the United States for the Second Dis-

trict of Arizona. *Ordered that the* habeas corpus *issue.*

[354] The facts are stated in the opinion.

Messrs. S. F. Phillips, **W. H. Lamar** and **J. G. Zachry**, for petitioner.

Mr. **G. A. Jenks**, *Solicitor-Gen.*, for respondent:

Mr. Justice **Miller** delivered the opinion of the court:

The only distinctions between this case and that of Gon-shay-ee, in which the opinion has just been delivered, are—

First. That Captain Jack was sentenced to imprisonment at hard labor in the Penitentiary of Ohio for thirty years, and the writ must, therefore, be directed to the keeper of that institution at Columbus in that State;

Second. That it appears by the record that in the former case the offense was committed on an Indian Reservation, while in the case of Captain Jack the act was done within the judicial district, but not upon such a reservation.

We do not consider that these differences have any influence in the decision of the question as to the jurisdiction of the court which tried them both, *and that therefore in this case, as in the former, the writ of* habeas corpus *should issue.*

---

[335] UNITED STATES, *Appt.*,

v.

OSCAR J. AVERILL *et al*

(See S. C. Reporter's ed. 335-341.)

Fees of clerks of district courts in Territory of Utah—statutes which govern them.

1. Sections 823 and 839 of the Revised Statutes apply to the allowance for compensation to the clerks of district courts in the Territory of Utah.
2. Section 1883 of the Revised Statutes governs the fees to be allowed to clerks of district courts in the Territories for their services.
3. No other fees can, under section 1883, be allowed to be retained by clerks of the district courts in Utah for personal compensation than is allowed to be retained by the clerks of the district courts named in section 839.

[No. 23.]

Argued April 26, 1888. Decided April 15, 1889.

APPEAL from a judgment of the Supreme Court of the Territory of Utah, affirming a judgment of the District Court of that Territory, for defendants, in an action brought by the United States upon the bond of the clerk of a District Court of that Territory, to recover a surplus of fees and emoluments received by the clerk, in excess of the amount which he was entitled to retain. *Reversed.*

The facts are stated in the opinion.

Mr. **Wm. A. Maury**, *Assist. Atty-Gen.*, for appellant.

No counsel appeared for appellees.

Mr. Justice **Blatchford** delivered the opinion of the court:

This is an action at law, brought by the United States in the District Court of the Third Judicial District, Territory of Utah, upon the official bond of Oscar J. Averill, as clerk of the Third Judicial District Court of the Territory of Utah, on which the other defendants were sureties, to recover the sum of $5,253.33, being an alleged surplus of fees and emoluments received by the said Averill as clerk between August 5, 1879, and December 31, 1883, in excess of the amounts which he was entitled to retain for his personal services and the reasonable and necessary expenses of his office during that period, and for which it was claimed he was bound to account to the United States. The cause was heard in the district court upon a general demurrer to the complaint, on which judgment was rendered for the defendants. The judgment of the district court was affirmed on appeal by the supreme court of the Territory. To reverse that judgment the United States prosecute this appeal.

Section 1 of the Act entitled "An Act to Regulate the Fees and Costs to be Allowed Clerks, Marshals and Attorneys of the Circuit [336] and District Courts of the United States, and for Other Purposes," passed February 26, 1853 (chap. 80, 10 Stat. at L. 161), provided as follows as originally enacted: "That in lieu of the compensation now allowed by law to attorneys, solicitors and proctors in the United States Courts, to United States District Attorneys, clerks of the district and circuit courts, marshals, witnesses, jurors, commissioners and printers in the several States, the following and no other compensation shall be taxed and allowed." Then followed a specification of fees to be charged by various officers for various services. Section 8 provided for the rendering of accounts of fees, semi-annually, by district attorneys, clerks of the district and circuit courts and marshals, and contained the following enactment: "And no clerk of a district court or clerk of a circuit court shall be allowed by the said secretary," the Secretary of the Interior, "to retain of the fees and emoluments of his said office, or, in case both of the said clerkships shall be held by the same person, of the said offices, for his own personal compensation, over and above the necessary expenses of his office and necessary clerk hire included, also to be audited and allowed by the proper accounting officers of the treasury, a sum exceeding three thousand five hundred dollars per year for any such district clerk or circuit clerk, or at and after that rate for such time as he shall hold the office." These provisions did not apply to the clerks of the territorial courts.

By section 12 of the Act "Making Appropriations for the Civil and Diplomatic Expenses of Government, for the year ending the thirtieth of June, eighteen hundred and fifty-six, and for Other Purposes," passed March 3d, 1855 (chap. 175, 10 Stat. at L. 671), it was enacted "that the provisions of the Act of February twenty-sixth, eighteen hundred and fifty-three, 'to regulate the fees and costs to be allowed clerks, marshals and attorneys of the Circuit and District Courts of the United States, and for other purposes,' are hereby extended to the Territories of Minnesota, New Mexico and Utah, as fully in all particulars as they would be had the word 'Territories' been inserted in the sixth line after the word 'States,' and the same had read 'in the several States and in the Territories of the United States.' This clause [337] to take effect from and after the date of said Act, and the accounting officers will settle

the accounts within its purview accordingly." With this amendment section 1 of the Act of February 26, 1853, read as follows: "That in lieu of the compensation now allowed by law to attorneys, solicitors and proctors in the United States courts to United States District Attorneys, clerks of the district and circuit courts, marshals, witnesses, jurors, commissioners and printers in the several States and in the Territories of the United States, the following and no other compensation shall be taxed and allowed."

When section 1 of the Act of 1853, as originally enacted, spoke of the compensation to be "allowed" to the officers named in it, it clearly included the compensation to be allowed to be retained by them for their services. This is also plainly indicated in section 3 of the same Act, in the provision as to the amount per year which a clerk of a district or circuit court may be "allowed" to retain, out of the fees and emoluments of his office, "for his own personal compensation." So when, by the amendment made in 1855 to section 1 of the Act of 1853, the latter Act was made to apply to the compensation to be allowed, in the Territory of Utah, to the clerks of the district courts there, the provision of section 3 of that Act as to compensation allowed to be retained by a clerk of a district court, was necessarily made applicable to clerks of district courts in the Territory of Utah. Because, by the Act of 1855, the provisions, that is, all the provisions of the Act of 1853 are extended to the Territory of Utah "as fully in all particulars as they would be" had the words "and in the Territories of the United States" been inserted in section 1 of the Act of 1853 as originally enacted. This is further shown by the fact that the new clause is, by the Act of 1855, made to take effect from and after the date of the Act of 1853, and the "accounting officers" are directed to "settle the accounts within its purview accordingly." This can refer only to the "proper accounting officers of the Treasury," who are required by section 3 of the Act of 1853 to audit and allow the compensation accounts of the clerks of courts. The accounts within the purview of the Amendment of 1855, [338] which the accounting officers were required to settle "accordingly," necessarily included accounts for the compensation of the clerks of the district courts of the Territory of Utah, which were to be settled according to the requirements of section 3 of the Act of 1853.

This was the state of legislation in regard to the question under consideration when the Revised Statutes were enacted. Section 823 of those statutes, which is taken from section 1 of the Act of 1853, provides as follows: "The following and no other compensation shall be taxed and allowed to attorneys, solicitors, and proctors in the courts of the United States, to district attorneys, clerks of the circuit and district courts, marshals, commissioners, witnesses, jurors, and printers in the several States and Territories, except in cases otherwise expressly provided by law." By the Act of June 27, 1866, chap. 140, section 2 (14 Stat. at L. 74), the commissioners to revise the statutes were directed to place at the sections of the revision "references to the original text from which each section is compiled." The references opposite section 823 are these: "26 Feb., 1853, c. 80, s. 1, v. 10, p. 161, 3 Mar., 1855, c. 155, s. 12, v. 10, pp. 670, 671." This shows that the provision of the Act of 1855 was regarded as being incorporated in section 823. The provision of section 3 of the Act of 1853, in regard to the compensation to be retained by clerks, was embodied in section 839 of the Revised Statutes, in these words: "No clerk of a district court, or clerk of a circuit court, shall be allowed by the Attorney-General, except as provided in the next section, and in section eight hundred and forty-two, to retain of the fees and emoluments of his office, or, in case both of the said clerkships are held by the same person, of the fees and emoluments of the said offices, for his personal compensation, over and above his necessary office expenses, including necessary clerk hire, to be audited and allowed by the proper accounting officers of the Treasury, a sum exceeding three thousand five hundred dollars a year for any such district clerk, or for any such circuit clerk, or exceeding that rate for any time less than a year." By section 15 of the Act of June 22, 1870, chap. 150 (16 Stat. at L. 164), the Attorney-General had been given the supervisory power over the accounts of the officers of courts, in place of the Secretary of the Interior. [339] The exceptions contained in section 840 have reference to the clerks of the circuit and district courts in California, Oregon, and Nevada, who are authorized to retain, for their personal compensation, out of fees received, not exceeding $7,000 a year. Section 842 grants additional compensation to clerks and marshals for special services in prize causes.

We think that sections 823 and 839 must have the same construction that sections 1 and 3 of the Act of 1853 were required to have, after the enactment of the Act of 1855, and that they apply to the allowance for compensation to the clerks of district courts in the Territory of Utah. There is no indication in the language of those sections of the Revised Statutes of any intention to change the meaning of sections 1 and 3 of the Act of 1853, as modified by the Act of 1855, as such meaning stood on the 1st of December, 1873. In the absence of such indication, sections 823 and 839 of the Revised Statutes must be accepted as the law on the subjects which they embrace, as it existed on the 1st of December, 1873. *United States* v. *Bowen*, 100 U. S. 508 [25: 631]; *Cambria Iron Co.* v. *Ashburn*, 118 U. S. 54, 57 [30: 60, 61].

On the 23d of June, 1874, the day after the enactment of the Revised Statutes, Congress passed an Act "In relation to Courts and Judicial Officers in the Territory of Utah" (18 Stat. at L. 253, chap. 469), the 7th section of which read as follows: "That the Act of the Territorial Legislature of the Territory of Utah, entitled 'An Act in relation to Marshals and Attorneys,' approved March third, eighteen hundred and fifty-two, and all laws of said Territory inconsistent with the provisions of this Act, are hereby disapproved. The Act of Congress of the United States entitled 'An Act to Regulate the Fees and Costs to be Allowed Clerks, Marshals, and Attorneys of the Circuit and District Courts of the United States, and for Other Purposes,' approved February twenty-sixth, eighteen hundred and fifty-three, is ex

tended over and shall apply to the fees of like officers in said Territory of Utah. But the district attorney shall not by fees and salary together receive more than thirty-five hundred dollars per year; and all fees and moneys re-
[340] ceived by him above said amount shall be paid into the Treasury of the United States." We do not perceive that this section changes the law as it then existed, in the particular in question. There is no express repeal of the provision of the Act of 1855, nor anything inconsistent with it. The Act of 1853, that is, the entire Act, is extended over and made to apply to "the fees of like officers in said Territory of Utah," that is, to "the fees and costs to be allowed clerks, marshals and attorneys" in the district courts in Utah, subject to the special provision of section 7 as to the compensation of the district attorney. The allowance of fees covers the allowance of compensation to be retained out of fees, in the settlement of accounts by the accounting officers of the Treasury. At the most, this legislation was redundant, so far as the compensation of the clerks of the district courts in Utah was concerned.

It remains only to notice section 1883 of the Revised Statutes, which provides as follows: "The fees and costs to be allowed to the United States attorneys and marshals, to the clerks of the supreme and district courts, and to jurors, witnesses, commissioners and printers, in the Territories of the United States, shall be the same for similar services by such persons as prescribed in chapter sixteen, title 'THE JUDICIARY,' and no other compensation shall be taxed or allowed." Reference is made in the margin of section 1883, both in the first and second editions of the Revised Statutes, to the organic and other Acts relating to nine Territories, including Utah, and to section 12 of the Act of March 3, 1855, hereinbefore recited, showing that section 1883 was compiled from the statutory provisions thus referred to. This section 1883 must have the same construction above given to sections 1 and 3 of the Act of 1853, as modified by the Act of 1855, and to sections 823 and 839 of the Revised Statutes, as enacted. The fees mentioned in section 1883 as "to be allowed" to clerks of the district courts in the Territories, cover the fees to be retained by them for compensation for services. Sections 823 and 839 are in chapter 16 of the title mentioned. They prescribe the fees to be allowed to, and retained by, clerks of district courts; "and no other compensation" can, un-
[341] der section 1883, be allowed to be retained by clerks of the district courts in Utah, for personal compensation, than is by the provisions of chapter 16 of the title mentioned prescribed to be allowed to be retained by the clerks of the district courts named in section 839, for personal compensation. Section 1883 is in the same language in both editions of the Revised Statutes, but, in the 2d edition, a marginal reference is made to section 7 of the Act of June 23, 1874, hereinbefore quoted, passed after the Revised Statutes were enacted.

The judgment of the Supreme Court of the Territory of Utah is reversed, and the case is remanded to that Court, with a direction to reverse the judgment of the Third Judicial District Court of the Territory of Utah, dismissing the complaint, and to take such further proceedings as may be conformable to law and not inconsistent with the opinion of this Court.

Mr. Chief Justice **Fuller was not a member of the court when this case was argued, and took no part in its decision.**

WILLIAM W. GIBBS, *Plff. in Errr.*, [396]
v.
THE CONSOLIDATED GAS COMPANY OF BALTIMORE CITY.

(S. C. Reporter's ed. 396–412.)

Instruction to jury—agent's fees for procuring unlawful contract—contract between gas companies—when illegal—public duties—illegal employment.

1. An objection to an instruction of the court, not taken in the court below, that the court assumed in it a fact which should have been left to the jury, is not entitled to weight.
2. A person cannot recover for services for procuring a contract to be entered into which is forbidden by statute or by public policy, where he is privy to the unlawful design of the parties.
3. An agreement between two gas companies, of the same city, for the abandonment by one of the companies of the discharge of its duties to the public, and that the price of gas as fixed thereby should not be changed below a certain specified rate without the consent of the other, where one of the companies is prohibited by statute from entering into such a contract, is an illegal contract.
4. The supplying of illuminating gas is a business of a public nature, to meet a public necessity; and where such business cannot be restrained without prejudice to the public interest, contracts imposing such restraints, however partial, will not be enforced or sustained, because in contravention of public policy.
5. A corporation cannot disable itself by contract from performing the public duties which it has undertaken, nor, by agreement, compel itself to make public accommodation subservient to its private interests.
6. The court will not assist the plaintiff to get payment for efforts to accomplish what the law declares should not be done.

[No. 220.]

Argued March 19, 20, 1889. Decided April 15, 1889.

IN ERROR to the Circuit Court of the United States for the District of Maryland, to review a judgment for defendant in an action for services rendered by plaintiff in negotiating and consummating an arrangement and settlement of differences between the defendant and another gas company of the same city. *Affirmed.*

Statement by *Mr. Chief Justice* **Fuller:**

Plaintiff in error brought this action in the Circuit Court of the United States for the District of Maryland against the defendant in error, "a corporation duly incorporated under the laws of Maryland, for money payable by the defendant to the plaintiff," as stated in the "bill of particulars of plaintiff's claim," "for services rendered by me at your request in negotiating and consummating an arrangement and settlement of differences between the Consolidated Gas Co. of Balto. City and the Equitable Gas Light Co. of Balto. City, between July 1st, 1884, and November 1st, 1884, $50,000;" and a trial was had upon the gen-

eral issue pleaded, resulting in verdict and judgment for the defendant, May 14, 1885.

From the bill of exceptions it appears that—

"At the trial of this case, the incorporation [397] of the defendant being admitted, the plaintiff, to maintain the issues upon his part joined, gave in evidence the agreement following between said defendant and the Equitable Gas-Light Company of Baltimore City, a Maryland corporation—that is to say: AGREEMENT.—This agreement, made this seventh day of October, eighteen hundred and eighty-four, between the Equitable Gas-Light Company of Baltimore City, a corporation duly organized under the laws of the State of Maryland, party of the first part, and the Consolidated Gas Company of Baltimore City, a corporation duly organized under the laws of the same State, party of the second part. Whereas, the parties hereto conduct the business of making and selling gas in the City of Baltimore, Maryland, and for some time past have been drawn into active competition, resulting in a loss of profits to each company, as well as large expenses and great annoyance; and whereas, each party hereto desires to enter into an arrangement with the other, whereby the business of each may be conducted in a more profitable manner than at present:

"Now, therefore, in consideration of the premises and of the mutuality hereof, it is hereby agreed between said parties as follows, viz.:

"1. Gas shall be sold by each company at a rate of one dollar and seventy-five cents per thousand cubic feet, with a rebate of fifteen cents a thousand feet to consumers for payment within seven days from date of rendering bill, unless the rate shall be changed by mutual agreement of the parties hereto in writing; but in view of the much larger interest of the party of the second part in the subject matter of this contract, it is agreed that in case of competition on the part of any other gas company the said party of the second part shall have the right at its discretion to reduce the rate at which gas shall be sold by either or both of the parties hereto, and shall have the right at its discretion to fix and change said price at which gas shall be sold by either or both of the parties hereto, from time to time so long as such competition shall continue: *Provided*, That said price shall not be placed at [398] less than one dollar ($1.00) per thousand feet without the mutual consent of the parties hereto in writing. The introduction of gas from the street main to the inside of the building to be lighted will in all cases be done by the companies, for which the proprietor of the building or the person applying for the supply of gas will be required to pay in advance the sum of eight dollars ($8.00) to cover the expenses of tapping main, laying service pipe, setting meter, and its connection to the building line. An extra charge will be made where the building is set back from the building line.

"2. Each party hereto shall deduct from its receipts and retain the sum of one dollar for every thousand feet of gas sold by it as a basis of cost to cover all expenses of the business of each.

"3. All extensions of mains, including services and meters on said extensions, and all enlargement of the capacity of the works necessary to do the increasing business during the continuance of this agreement, shall be made by the Consolidated Gas Company of Baltimore City at its own cost and expense, whose property such enlargements and extensions shall be, the Equitable Company only being required to provide the meters and services necessary to supply such additional consumers as may be furnished by it under section 5, below.

"4. Division of receipts shall be made as follows, viz.:

"1. All receipts (over and above the sum of one dollar per thousand feet allowed as a basis of cost) from gas sold each year upon sales not exceeding the total quantity of gas sold by both of said companies during the year ending October first, eighteen hundred and eighty-four, shall be divided between the parties hereto in the following proportions, viz.: The party of the first part shall receive such a proportion of the same as the amount of gas sold by it during the year ending October first, eighteen hundred and eighty-four, shall bear to the total quantity of gas sold by both of the parties hereto during that period, provided the quantity sold by the party hereto of the first part during said period shall not exceed two hundred and thirteen millions of feet (213,000,000), and the party of the second part shall receive all the balance after deducting the amount to which the party [399] of the first part shall be entitled, as above provided, it being expressly understood and agreed that the basis of participation in said receipts shall be the proportion which the quantity of gas sold by each party from October first, eighteen hundred and eighty three, to October first, eighteen hundred and eighty-four, bears to the total quantity of gas sold by both parties hereto, and that neither party hereto shall receive more thereof than by such a basis of division it would be entitled to, subject, however, to the foregoing provision that the quantity sold by the party of the first part during the said year ending October first, eighteen hundred and eighty-four, shall not be considered as exceeding two hundred and thirteen millions ($213,000,000) of feet as aforesaid.

"2. All receipts (over and above the said allowance of one dollar per thousand feet as a basis of cost) from gas sold each year upon sales in excess of the said total quantity sold during the year ending October first, eighteen hundred and eighty-four, shall be divided as follows, viz.: The party of the first part shall receive thereout a percentage equal to one half of the percentage which it will receive as above, and the party of the second part shall receive all the balance of such receipts from said increased sales.

"5. Neither party hereto shall solicit any business belonging to the other, but either party may take such consumers of the other as may voluntarily, without any solicitation, desire to change from one to the other.

"6. All the accounts between the parties hereto hereunder shall be adjusted quarterly on the tenth days of February, May, August and November of each year for the quarter ending on the last day of December, March, June and September, and settlements of all balances shall be made within ten days thereafter. The said adjustment of accounts shall be made by an

auditor, who shall be chosen by the agreement of both parties hereto.

"7. If any differences or misunderstanding arise hereunder, the matter in dispute shall be referred for decision to three arbiters, whose decision shall be binding upon the parties hereto, so far as in law it may have binding force [400] and effect. Said arbiters shall be chosen as follows, viz.: One shall be chosen by each party hereto and the third by the two so chosen: *Provided*, That if either party hereto neglects or refuses for ten days after request, in writing, mailed or personally delivered, to appoint an arbiter, the party making such request shall appoint two arbiters, who shall appoint a third, as above provided.

"8. It is further understood and agreed that if either party hereto shall at any time willfully fail, omit, or neglect to perform or shall violate any of the covenants herein contained, such party shall be liable to the other for all loss and damage caused to or suffered by it thereby, and that the damages which shall be caused thereby will be equal to the sum of two hundred and fifty thousand dollars ($250,000), and that the party who shall so fail, neglect or omit to perform, or who shall violate any of the covenants herein contained, shall at once thereupon pay to the other party the sum of two hundred and fifty thousand dollars as liquidated damages, and that upon failure to pay the same upon demand suit may be brought therefor, in which the damages so caused or suffered shall be assessed at said sum of two hundred and fifty thousand dollars.

"9. This agreement shall take effect from October fifteenth, eighteen hundred and eighty-four, and shall continue in force for thirty years from its date."

[Duly signed and sealed October 7th, 1884.]

"The plaintiff then proved the incorporation of the United Gas Improvement Company, a corporation incorporated by and doing business in the State of Pennsylvania.

"The plaintiff further proved that, at the time of the agreement aforesaid, he was the general manager of the said United Gas Improvement Company, and the business of the said corporation was the owning, improving, leasing, and manipulation of gas property throughout the country, said company being the owner of many gas works in various parts of the Union, and constantly in negotiation for the sale and purchase of that kind of property.

"He further proved that, by reason of the rivalry in the City of Baltimore between the de- [401] fendant and the Equitable Gas-Light Company aforesaid, the price of gas had been reduced to a figure below that at which it could be profitably manufactured, and that the company of which the plaintiff was manager, as well as other gas companies throughout the country, had been materially inconvenienced by the fact that they were required and expected by their customers to sell their gas at the insufficient price at which it was furnished in Baltimore. It became, therefore, the interest of the plaintiff and his company that the conflict in Baltimore should, if possible, be brought to an amicable termination, and the plaintiff made a suggestion to that effect to the president of the Equitable Gas-Light Company, and in consequence thereof was employed by that company to bring about a settlement, if possible, with the defendant. For this purpose the plaintiff visited Baltimore and opened negotiations with the defendant, which were carried on for some time by proposition and counter proposition, and resulted, finally, in the agreement heretofore inserted in this bill of exceptions.

"The plaintiff gave further evidence tending to show that early in those negotiations he informed the defendant, through the committee representing it, that he was employed and would be paid by the Equitable Gas-Light Company if he made an arrangement satisfactory to that company, and that if he should be successful in bringing about a settlement satisfactory to the defendant also, he should expect and claim to be compensated by the defendant likewise.

"Further testimony in respect to the matter of his said negotiations and services and his claimed and expected compensation from the defendant was given by the plaintiff tending to support and establish the hypotheses of fact set up by the plaintiff in those regards in his prayers hereinafter to be inserted.

"The defendant then, to maintain the issues upon its part joined, gave in evidence the Acts of the General Assembly of Maryland of 1867, chap. 132, and of 1882, chap. 337, both relating to the Equitable Gas-Light Company of Baltimore City, which it was agreed might be read in evidence, if necessary, from the statute book, on the hearing in error.

"The defendant further gave evidence tend- [402] ing to contradict the evidence on the part of the plaintiff in regard to what occurred between the plaintiff and the defendant's committee in respect to the negotiations aforementioned, and to the plaintiff's alleged demand for compensation from the defendant, and tending to disprove the facts assumed as the hypotheses of the plaintiff's prayers; and the defendant further gave evidence tending to establish and maintain the hypotheses of fact set up by the defendant in its prayers to the court, hereinafter to be inserted."

Various instructions were asked on behalf of each of the parties, which the court declined to give, but at defendant's request instructed the jury "that the plaintiff, upon the pleadings and evidence in this case, is not entitled to recover, because the contract offered in evidence, and for the procuring of the making whereof he claims compensation in this suit, was illegal and void."

Mr. **S. T. Wallis**, for plaintiff in error:

The recognition of public policy, independently of statutory regulation, as a test of the validity of contracts, is, at best, the establishment of a very uncertain rule.

Richardson v. *Mellish*, 2 Bing. 229, 252; *Davies* v. *Davies*, L. R. 36 Ch. Div. 359, 364; *Sadlier* v. *Biggs*, 4 H. L. Cas. 437-439; *Hilton* v. *Eckersley*, 6 El. & Bl. 47, 64; *Printing & N. Reg. Co.* v. *Sampson*, L. R. 19 Eq. 465; *Re Trust Estate of Woods*, 52 Md. 520, 536; *Vidal* v. *Girard*, 43 U. S. 2 How. 197, 198 (11: 205); *Richmond* v. *Dubuque & S. C. R. Co.* 26 Iowa, 191, 202; *Swann* v. *Swann*, 21 Fed. Rep. 299, 301; Tindall, *C. J.* in *Wolsh* v. *Fussell*, 6 Bing. 163; Greenhood, Public Policy, Rule 129, pp. 116,

117, and cases in notes; *Oregon Steam Nav. Co.* v. *Winsor*, 87 U. S. 20 Wall. 64 (22: 315); *Baines* v. *Geary*, L. R. 35 Ch. Div. 156; *Hobbs* v. *McLean*, 117 U. S. 569, 576 (29: 941, 943); *U. S.* v. *Central Pac. R. Co.* 118 U. S. 235-240 (30: 173-175).

In contracts in restraint of trade, the restraint must be reasonable.

Horner v. *Graves*, 7 Bing. 743; *Hitchcock* v. *Coker*, 6 Ad. & El. 438; *Mallan* v. *May*, 11 Mees. & W. 653, 664, 666; *Baines* v. *Geary*, L. R. 35 Ch. Div. 154; *Davies* v. *Davies*, L. R. 36 Ch. Div. 359, 396, 397, 398; *Rousillon* v. *Rousillon*, L. R. 14 Ch. Div. 363; *Nat. Prov. Bank* v. *Marshall*, L. R. 40 Ch. Div. 112; *Diamond Match Co.* v. *Roeber*, 9 Cent. Rep. 181-187, 106 N. Y. 473-487; Pollock, Cont. 315, 316.

The test of public policy is to be applied with the greatest caution.

Richardson v. *Mellish*, 2 Bing. 229.

Contracts involving the question of interference with trade are *prima facie* valid.

Pollock, Cont. 315; *Mogul Steamship Co.* v. *McGregor*, L. R. 21 Q. B. Div. 544, 552.

States may establish monopolies for public purposes.

Slaughter House Cases, 83 U. S. 16 Wall. 36 (21:394); *New Orleans Water Works Co.* v. *Rivers*, 115 U. S. 674 (29: 525); *New Orleans Gaslight Co.* v. *La. Light & Heat Co.* 115 U. S. 650 (29: 516); *Louisville Gas Co.* v. *Citizens Gaslight Co.* 115 U. S. 683 (29: 510).

Contracts in restraint of trade will be valid, when the restriction is not larger and wider than the protection of the party with whom the contract is made can possibly require.

Guerand v. *Dandelet*, 32 Md. 561, 570; *Booth* v. *Robinson*, 55 Md. 419; *Tonawanda Valley & C. R. Co.* v. *New York, L. E. & W. R. Co.* 42 Hun, 496, 499; *Leslie* v. *Lorillard*, 1 L. R. A. 456, 110 N. Y. 519, 532-534; *Dubuque & S. C. R. Co.* v. *Richmond*, 86 U. S. 19 Wall. 584, 590 (22: 173, 176); *Central Shade Roller Co.* v. *Cushman*, 8 New Eng. Rep. 505, 143 Mass. 353, 363; *Skrainka* v. *Scharringhausen*, 8 Mo. App. 522; *Columbus, P. & I. R. Co.* v. *Indianapolis & B. R. Co.* 5 McLean, 450-454; *Androscoggin & K. R. Co.* v. *Androscoggin R. Co.* 52 Maine, 417, 434; Greenhood, Public Policy, 324, Rule 270.

Although contracts cannot be enforced, yet if parties carry them out they become entitled to claim the promise or payment due in respect of it.

Leake, Cont. Lond. 1878, 738; *Bishop* v. *Kitchin*, 38 L. J. N. S. Q. B. 20.

Where contracts are positively immoral or illegal, the property earned from them will be dealt with according to equity, and the contracts will define the relation of the parties to the property.

Planters Bank v. *Union Bank*, 83 U. S. 16 Wall. 483 (21: 473); *Western Union Teleg. Co.* v. *Burlington & S. W. R. Co.* 3 McCrary, 138, 139; *Cook* v. *Sherman*, 4 McCrary, 33.

The agreement having been executed, the parties, having submitted to its terms, are clearly entitled to the benefit of the consideration stipulated.

Irwin v. *Williar*, 110 U. 499, 509, 510 (28: 225, 230); *Roundtree* v. *Smith*, 108 U. S. 269, 276 (27: 722, 724); *Stewart* v. *Schall*, 3 Cent. Rep. 509, 65 Md. 307, 308; *Gilbert* v. *Gaugar*, 8 Biss. 214.

If the plaintiff rendered services, the jury could infer an agreement, expressed or implied, to pay him.

Spencer v. *Trafford*, 42 Md. 20; Pollock, Cont. 10.

Messrs. **R. D. Morrison** and **N. P. Bond**, for defendant in error:

The grant of a right to supply gas to a municipality is the grant of a franchise in consideration of the performance of a public service.

New Orleans Gaslight Co. v. *La. Light & Heat Co.* 115 U. S. 650 (29: 516); *Louisville Gas Co.* v. *Citizens Gaslight Co.* 115 U. S. 683 (29: 510).

Agreements whereby the due performance of public duties is endangered or prevented, are illegal.

Morris Run Coal Co. v. *Barclay Coal Co.* 68 Pa. 173; *Hartford & N. H. R. Co.* v. *New York & N. H. R. Co.* 3 Robt. 411; *Stanton* v. *Allen*, 5 Denio, 435; *Charlton* v. *Newcastle & C. R. Co.* 5 Jur. N. S. 1096; *St. Louis* v. *St. Louis Gaslight Co.* 5 Mo. App. 484.

Contracts whereby corporations disable themselves from performing their chartered duties, are void as against public policy.

Thomas v. *West Jersey R. Co.* 101 U. S. 83 (25: 952); *York & M. L. R. Co.* v. *Winans*, 58 U. S. 17 How. 30 (15: 27); *St. Louis* v. *St. Louis Gaslight Co.* 5 Mo. App. 484; *Hartford & N. H. R. Co.* v. *New York & N. H. R. Co.* 3 Robt. 414; *Stanton* v. *Allen*, 5 Denio, 435.

The agreement was expressly forbidden by the statute.

Sinking Fund Cases, 99 U. S. 719 (25: 501); *Pa. College Cases*, 80 U. S. 13 Wall. 213 (20: 553); *Salt Lake City* v. *Hollister*, 118 U. S. 256 (30: 176); *Union Nat. Bank* v. *Matthews*, 98 U. S. 625 (25: 189); *Harris* v. *Runnels*, 53 U. S. 12 How. 83 (13: 901); *Bank of U. S.* v. *Owens*, 27 U. S. 2 Pet. 539 (7: 508); *Aubert* v. *Maze*, 2 Bos. & P. 374; *Watts* v. *Brooks*, 3 Ves. Jr. 612; *Webb* v. *Pritchett*, 1 Bos. & P. 264.

Mr. Chief Justice **Fuller** delivered the opinion of the court: [403]

The plaintiff sought to recover compensation for services alleged to have been rendered by him to the defendant in securing the contract in question between the defendant and the Equitable Gas-Light Company of Baltimore. It is objected that the court erred in giving the instruction that the plaintiff was not entitled to recover, because it assumed a material fact in [404] dispute, which should have been left to the jury, namely: that it was "for the procuring of the making" of the contract offered in evidence that compensation was claimed. The record does not show that this objection to the instruction was taken in the court below, nor does it contain any evidence tending to establish that the plaintiff claimed compensation for anything else than for services in bringing about the agreement. Plaintiff's bill of particulars is for services "in negotiating and consummating an arrangement and settlement of differences" between the two gas companies; and he put the contract in evidence and adduced proof that he carried on negotiations, which "resulted finally" in the execution of it. He was general manager of a corporation engaged in the business of the "owning, improving, leasing, and manipulation of gas property throughout the country," and as his company and

other gas companies "had been materially inconvenienced by the fact that they were required and expected by their customers to sell their gas at the insufficient price at which it was furnished in Baltimore," he suggested "that the conflict in Baltimore should, if possible, be brought to an amicable termination," "and in consequence thereof" was employed by the Equitable Gas-Light Company "to bring about a settlement, if possible, with the defendant." The conflict referred to seems to have been the competition in the making and vending of gas in the City of Baltimore, which it had been the object of the General Assembly of Maryland to encourage; and the settlement to which he alludes was embodied in the contract in question, by which competition was to be destroyed and the object of the General Assembly defeated.

We do not feel called upon, under such circumstances, to reverse the judgment, upon the ground that the court assumed in the instruction a matter of fact which should have been left to the jury to determine.

According to the evidence given by the plaintiff, he informed the defendant "that he was employed and would be paid by the Equitable Gas-Light Company, if he made an arrangement satisfactory to that company, and that if he should be successful in bringing about a settlement satisfactory to the defendant also, he should expect and claim to be compensated by the defendant likewise." [405]

Since he had thus entered upon the enterprise under a specific agreement with the Equitable Gas Company, it is somewhat difficult to understand upon this record how, in carrying such an express contract out, he could impose the obligation on the defendant to pay him for doing so, upon a mere notification that he should expect from it compensation for the services he had expressly agreed to render the other company, because the result might be satisfactory to the defendant—a result necessarily to be assumed if any contract was arrived at. The defendant could not in that view be held to have laid by and accepted services which the plaintiff would otherwise not have been obliged to perform or could assert that he did perform only upon the expectation of being also paid by the defendant. The hypotheses of fact set up by the plaintiff in the instructions he asked, and which were refused, contain nothing in respect of which testimony tending to support and establish such hypotheses would add to the mere fact of the notification of plaintiff's expectation, and the evidence on defendant's part tended to show a denial of any obligation to pay. But apart from this, the real question submitted to us for decision is whether, even if there were no other objection to plaintiff's recovery, such recovery could be allowed in view of the nature of the alleged services.

In *Irwin* v. *Williar*, 110 U. S. 499, 510 [28: 225, 230], it was held that where a contract, void on account of the illegal intent of the principal parties to it, had been negotiated by a person ignorant of such intent, and innocent of any violation of law, the latter might have meritorious ground for the recovery of compensation for services and advances; but when such agent "is privy to the unlawful design of the parties, and brings them together for the very purpose of entering into an illegal agreement, he is *particeps criminis*, and cannot recover for services rendered or losses incurred by himself on behalf of either in forwarding the transaction." It is clear from the evidence adduced by the plaintiff that he falls within the category last described; and he makes profert of the fact that the first suggestion in the line of manipulating the gas interests of Baltimore came from himself. Hence, if the contract he brought about was forbidden by statute, or by public policy, it is evident that he could not recover, and the judgment must be affirmed. [406]

By this contract it is recited that active competition between the two companies had resulted in expense, annoyance, and loss of profits, and it was therefore provided that the price of gas to consumers should be placed at one dollar and seventy-five cents per thousand cubic feet, with a rebate of fifteen cents a thousand feet for payment within seven days, "unless the rate shall be changed by mutual agreement of the parties hereto in writing;" but as the defendant had much the larger interest, it might, in case of competition on the part of any other gas company, reduce the rate at which gas should be sold "by either or both of the parties hereto, from time to time so long as such competition shall continue," provided it should not be put at less than one dollar per thousand feet without the written consent of both parties; that the entire net receipts from the sale of gas should be pooled and divided between the companies in a fixed ratio without regard to the amount of gas actually supplied by either; that one of the companies should lay no more pipes or mains for the supply of gas in the city; that all future pipes or mains should be laid by and remain the property of the other company; and that either party which violated any of the covenants in the contract should pay to the other the sum of $250,000 as liquidated damages. It will be perceived that this was an agreement for the abandonment by one of the companies of the discharge of its duties to the public, and that the price of gas as fixed thereby should not be changed except that, in case of competition, the rate might be lowered by one, but not below a certain specified rate, without the consent of the other. And in the case in hand the Equitable Gas-Light Company was expressly forbidden to enter into such a contract. That company was incorporated by an Act of the General Assembly of Maryland, passed March 6, 1867, with a capital of two millions of dollars, which might be increased to three million, and with authority to lay pipes along and under the streets, squares, lanes, and alleys of the City of Baltimore, and to supply with light any dwelling house or other buildings or places whatever belonging to individuals or corporations, adjacent to any such street, square, lane, or alley, and with "all the rights and privileges granted to the Gas Light Company of Baltimore, by the second, third, fourth, and fifth sections of the ordinances of the mayor and city council of Baltimore, entitled an ordinance to provide for more effectually lighting the streets, squares, lanes and alleys of the City of Baltimore, approved June seventeenth, eighteen hundred and sixteen, and the Act of Assembly of December Session, [407]

eighteen hundred and sixteen, chapter two hundred and fifty-one, so far as the same are not inconsistent with the provisions of this Act, and the said company hereby incorporated shall be liable to all the duties, restrictions, and penalties [provided] for in said sections of said ordinance and in said Act of Assembly." (Laws Maryland, 1867, pp. 207, 211, 212.)

Reference to the Act and Ordinance of 1816 (Maryland Laws, 1813-1817, chap. 251, 1816, Ordinances, Baltimore, 1813-1822, p. 95), does not contribute to the argument here save as indicating the design of the General Assembly to give equal powers to a competing company. Said Act of March 6, 1867, § 14, further provided that "The General Assembly hereby reserves the right to alter, amend, or repeal this Act at pleasure." (Laws, Maryland, 1867, 207, 214.)

On the 3d of May, 1882, an Act supplementary to the Act incorporating the Equitable Gas-Light Company of Baltimore City was approved (Laws, of Maryland, 1882, pp. 550, 551), authorizing and empowering said company to manufacture and sell gas in Baltimore County as well as in Baltimore City, and to exercise all the powers and rights conferred upon it by the Acts of Assembly and any amendments thereto, including the right to lay all necessary and convenient pipes, etc., in the county as well as in the city, and the fourth section of this Act was as follows:

"That the said company be, and hereby is, prohibited from entering into any consolidation, combinations, or contract with any other gas company whatever; and any attempt to do so, or to make such combinations or contracts as herein prohibited, shall be utterly null and void." [408]

In *Greenwood* v. *Union Freight R. Co.* 105 U. S. 13 [26: 961], the right to repeal the charter of a street railroad company was sustained under a provision of the general statutes of Massachusetts declaring "Every Act of incorporation passed after the 11th day of March, in the year 1831, shall be subject to amendment, alteration, or repeal at the pleasure of the Legislature."

In *Close* v. *Glenwood Cemetery*, 107 U. S. 466, 476 [27: 408, 412], it was said that "A power reserved to the Legislature to alter, amend, or repeal a charter authorizes it to make any alteration or amendment of a charter granted subject to it, which will not defeat or substantially impair the object of the grant, or any rights vested under it, and which the Legislature may deem necessary to secure either that object or any public right."

Similar views were expressed in *Spring Valley Water Works* v. *Schottler*, 110 U. S. 347 [28: 173]; *Callaway Co.* v. *Foster*, 93 U. S. 567 [23: 911]; and other cases.

The consent of the corporation was not required to the operation of such a provision as that embodied in the fourth section of the Act of 1882, but if acceptance were necessary, the exercise of corporate action by this gas company after the passage of the amendment was sufficient evidence of such acceptance.

The supplying of illuminating gas is a business of a public nature to meet a public necessity. It is not a business like that of an ordinary corporation engaged in the manufacture of articles that may be furnished by individual effort. *New Orleans Gaslight Co.* v. *Louisiana Light & Heat Co.* 115 U. S. 650 [29: 516]; *Louisville Gas Co.* v. *Citizens Gaslight Co.* 115 U. S. 683 [29: 510]; *Shepard* v. *Milwaukee Gaslight Co.* 6 Wis. 539; *Chicago Gas-light & Coke Co.* v. *Peoples' Gas-light & Coke Co.* 121 Ill. 530 [11 West. Rep. 63]; *St. Louis* v. *St. Louis Gaslight Co.* 70 Mo. 69. Hence, while it is justly urged that those rules which say that a given contract is against public policy, should not be arbitrarily extended so as to interfere with the freedom of contract (*Printing Co.* v. *Sampson*, L. R. 19 Eq. 462), yet, in the instance of business of such character that it presumably cannot be restrained to any extent whatever without prejudice to the public interest, courts decline to enforce or sustain contracts imposing such restraint, however partial, because in contravention of public policy. This subject is much considered, and the authorities cited in *W. Va. Transp. Co.* v. *Ohio River Pipe Line Co.* 22 W. Va. 600; *Chicago Gas-light & C. Co.* v. *People's Gas-light & C. Co.* 121 Ill. 530 [11 West. Rep. 63]; *Western Union Teleg. Co.* v. *American Union Teleg. Co.* 65 Ga. 160. [409]

The decision in *Mitchel* v. *Reynolds*, 1 P. Wms. 181, Smith's Leading Cases, Vol. 1, Pt. II, 508, is the foundation of the rule in relation to the invalidity of contracts in restraint of trade; but as it was made under a condition of things, and a state of society, different from those which now prevail, the rule laid down is not regarded as inflexible, and has been considerably modified. Public welfare is first considered, and if it be not involved, and the restraint upon one party is not greater than protection to the other party requires, the contract may be sustained. The question is, whether, under the particular circumstances of the case and the nature of the particular contract involved in it, the contract is, or is not, unreasonable. *Rousillon* v. *Rousillon*, L. R. 14 Ch. Div. 351; *Leather Cloth Co.* v. *Lorsont*, L. R. 9 Eq. 345.

"Cases must be judged according to their circumstances," remarked *Mr. Justice* Bradley in *Oregon Steam Nav. Co.* v. *Winsor*, 87 U. S. 20 Wall. 64, 68 [22:315, 318], "and can only be rightly judged when the reason and grounds of the rule are carefully considered. There are two principal grounds on which the doctrine is founded that a contract in restraint of trade is void as against public policy. One is the injury to the public by being deprived of the restricted party's industry; the other is, the injury to the party himself by being precluded from pursuing his occupation, and thus being prevented from supporting himself and his family. It is evident that both these evils occur when the contract is general, not to pursue one's trade at all, or not to pursue it in the entire realm or country. The country suffers the loss in both cases; and the party is deprived of his occupation, or is obliged to expatriate himself in order to follow it. A contract that is open to such grave objection is clearly against public policy. But if neither of these evils ensue, and if the contract is founded on a valid consideration and a reasonable ground of benefit to the other party, it is free from objection, and may be enforced." Innumerable [410]

cases, however, might be cited to sustain the proposition that combinations among those engaged in business impressed with a public or *quasi* public character, which are manifestly prejudicial to the public interest, cannot be upheld. The law "cannot recognize as valid any undertaking to do what fundamental doctrine or legal rule directly forbids. Nor can it give effect to any agreement the making whereof was an act violating law. So that, in short, all stipulations to overturn—or in evasion of—what the law has established; all promises interfering with the workings of the machinery of the government in any of its departments, or obstructing its officers in their official acts, or corrupting them; all detrimental to the public order and public good, in such manner and degree as the decisions of the courts have defined; all made to promote what a statute has declared to be wrong—are void." Bishop, Contracts, § 549; *Woodstock Iron Co.* v. *Richmond & D. Extension Co.*, decided at this term, opinion by *Mr. Justice* Field [*ante*, 819]; *Trist* v. *Child*, 88 U.S. 21 Wall. 441 [22: 623]; *Irwin* v. *Williar*, 110 U. S. 499 [28: 225]; *Arnot* v. *Pittston & E. Coal Co.* 68 N. Y. 558; *Central Ohio Sa't Co.* v. *Guthrie*, 35 Ohio St. 666; *Woodruff* v. *Berry*, 40 Ark. 261; *Hartford & N. H. R. Co.* v. *New York & N. H. R. Co.* 3 Robt. 411; *Craft* v. *McConoughy*, 79 Ill. 346; *Hooker* v. *Vandewater*, 4 Denio, 349; *Stanton* v. *Allen*, 5 Denio, 434; *Central R. Co.* v. *Collins*, 40 Ga. 582; *Morris Run Coal Co.* v. *Barclay Coal Co.* 68 Pa. 173.

It is also too well settled to admit of doubt that a corporation cannot disable itself by contract from performing the public duties which it has undertaken, and by agreement compel itself to make public accommodation or convenience subservient to its private interests.

"Where," says *Mr. Justice* Miller, delivering the opinion of the court in *Thomas* v. *West Jersey R. Co.* 101 U. S. 71, 83 [25: 950, 952], "a corporation, like a railroad company, has [411] granted to it by charter a franchise intended in large measure to be exercised for the public good, the due performance of those functions being the consideration of the public grant, any contract which disables the corporation from performing those functions, which undertakes without the consent of the State to transfer to others the rights and powers conferred by the charter, and to relieve the grantees of the burden which it imposes, is a violation of the contract with the State and is void as against public policy."

These gas companies entered the streets of Baltimore, under their charters, in the exercise of the equivalent of the power of eminent domain, and are to be held as having assumed an obligation to fulfill the public purposes to subserve which they were incorporated. At common law corporations formed merely for the pecuniary benefit of their shareholders could, by a vote of the majority thereof, part with their property and wind up their business; but corporations to which privileges are granted in order to enable them to accommodate the public, and in the proper discharge of whose duties the public are interested, do not come within the rule. But we are not concerned here with the question when, if ever, a corporation can cease to operate without forfeiture of its franchises, upon the excuse that it cannot go forward because of expense and want of remuneration. There is no evidence in this record of any such state of case, and, on the contrary, it appears that the cost of the manufacture of gas was largely below the price to be charged named in the stipulation between the parties. There is nothing upon which to rest the suggestion that the companies were unable to serve the consumers, while the record shows, on the other hand, that they simply desired to make larger profits on whatever gas they might furnish. Nor are we called upon to pass upon the validity generally of pooling agreements. Here the contract was directly in the teeth of the statute, which expressly forbade the Equitable Gas-Light Company from entering into it. That prohibition declared the policy of the State as well as restrained the particular corporation.

The distinction between *malum in se* and *malum prohibitum* has long since been ex- [412] ploded, and as "There can be no civil right where there can be no legal remedy, and there can be no legal remedy for that which is itself illegal" (*Bank of United States* v. *Owens*, 27 U. S. 2 Pet. 527, 539 [7: 508]), it is clear that contracts in direct violation of statutes expressly forbidding their execution, cannot be enforced.

The question is not one involving want of authority to contract on account of irregularity of organization or lack of an affirmative grant of power in the charter of a corporation, but a question of the absolute want of power to do that which is inhibited by statute, and, if attempted, is in positive terms declared "utterly null and void."

"The rule of law," said Parker, *Ch. J.*, in *Russell* v. *DeGrand*, 15 Mass. 35, 39, "is of universal operation, that none shall, by the aid of a court of justice obtain the fruits of an unlawful bargain."

We cannot assist the plaintiff to get payment for efforts to accomplish what the law declared should not be done, and *the judgment must be affirmed.*

THE CENTRAL TRUST COMPANY OF NEW YORK, *Appt.*, [482
v.
LEWIS SEASONGOOD.

(See S. C. Reporter's ed. 482-493.)

Appeal brings up whole cause—decree, binding upon the parties—suspending sale—estoppel.

1. An appeal of a cause brings up the whole cause as far as it had progressed including an appealable order previously made by the court below.

2. A decree of a state court, providing for a sale of a railroad, is binding upon all the parties to the suit in which it was rendered, until modified or reversed, and is not open to collateral attack by any of those parties in a separate suit brought by them in the Circuit Court of the United States, after the jurisdiction of the state court attached.

3. No order in the circuit court could interfere with or suspend the sale which the state court had directed to be made.

4. Where an agreement was made, between the appellee and the trust company who represented the bondholders, for the surrender by the former of rights given him by a decree of the state court, in consideration of the receiver's certificate for the

amount of his claim, the bondholders are bound by what their representative did, and cannot, after they purchased the property under a decree of sale, raise any question as to the validity of such certificate.

[No. 224.]

Argued March 21 and April 1, 1889. Decided April 15, 1889.

APPEAL from a decree of the Circuit Court of the United States for the Southern District of Ohio, for the foreclosure and sale of the Cincinnati Northern Railway. *Affirmed.*

[483] Statement by *Mr. Justice* **Harlan:**

The principal questions upon this appeal arise out of an order directing the receiver in this cause to issue to certain parties his certificate of indebtedness for the amount of claims held by them against the property of which he was directed to take possession. The history of those claims and the circumstances under which the above order was made will appear from the following statement:

Jacob Seasongood, Lewis Seasongood, and Bernard G. Stall, by written agreement, made August 29, 1876, bargained and sold to the Miami Valley Narrow Gauge Railway Company (whose name was afterwards changed to the Miami Valley Railway Company), for the purpose of its roadway, three adjoining lots in the City of Cincinnati, Ohio, for the sum of $18,500, of which $2,000 was agreed to be paid in thirty days, and $16,500, at the end of ten years, the latter sum to bear interest at the rate of seven per cent per annum, payable quarterly. The company also agreed to pay the taxes and assessments on the property. The vendors retained the legal title, but bound themselves to convey the premises, upon the performance by the vendee on its part of the agreement of purchase. The company was put into immediate possession, and proceeded to construct its road over the lots.

On the 1st of November, 1876, it mortgaged the road, its property and franchises to secure bonds aggregating $500,000. In an action brought in the Court of Common Pleas of Warren County, Ohio, that mortgage was foreclosed, and the mortgaged property sold. The [484] title ultimately passed to the Cincinnati Northern Railway Company, a corporation created under the laws of Ohio, with authority to construct and operate a railroad from Cincinnati through the Counties of Hamilton, Butler, and Warren to Waynesville in the latter county. That company, by mortgage in the nature of a trust deed, executed November 17, 1880, conveyed its property rights and franchises to the present appellant, as trustee, to secure bonds aggregating $1,000,000.

By a decree rendered by the Superior Court of Cincinnati, at general term, in an action brought, May 2, 1881, by Jacob Seasongood, Lewis Seasongood, and Bernard G. Stall against the Miami Valley Railway Company, the Cincinnati Northern Railway Company, the trustees in the mortgage of November 1, 1876, the Central Trust Company (the trustee in the mortgage of November 17, 1880), and others, it was found that there was due to the plaintiffs in that action, under the above agreement with the Miami Valley Railway Company, for interest and taxes, the sum of $7,806.22; and it was adjudged that for the payment of the above sum, with interest, together with the balance of the principal sum, "the plaintiffs have the first and best lien upon the lots of land described in said agreement;" that unless such sum, and the costs of the action, were paid within ninety days, the master "shall, after the court has ascertained and determined the dimension and location of so much of the lots of land aforesaid as are not needed for the railroad, cause such portions of said lots as he shall find as aforesaid to be unnecessary for the railroad, to be appraised and advertised, and sold upon execution at law;" and that, "In the event that the sum realized from the sale of the portions of the lots of land aforesaid shall be insufficient to pay the sum of money and interest and costs last aforesaid, the entire railway, as owned and operated by the said Cincinnati Northern Railway Company, shall be sold as an entirety." To this decree the Cincinnati Northern Railway Company and the Central Trust Company excepted, the latter corporation tendering its bill of exceptions, which was signed, sealed, and made part of the record.

By a further decree rendered October 3, 1883, the court found that certain portions of the lots, [485] described by metes and bounds, were not necessary for the roadway of the Cincinnati Northern Railway Company, and ordered them to be appraised and sold separately, and if they did not sell for enough to pay the above judgment, interest and costs, then to sell the road as theretofore ordered. To that decree the defendants also excepted.

The present suit was instituted in the Circuit Court of the United States, by the Central Trust Company of New York, on the 14th day of August, 1883 (the day after it filed its answer in the above suit in the Superior Court of Cincinnati), against the Toledo, Cincinnati and St. Louis Railroad Company, the Cincinnati Northern Railway Company, the Spring Grove, Avondale and Cincinnati Railway Company, and Grenville D. Braman. The bill set out the above mortgage or deed of trust of November 17, 1880; the lease by the Cincinnati Northern Railway Company for the term of ninety-nine years of the tracks, roadbed, rights of way, property, franchises, etc., of the Spring Grove, Avondale and Cincinnati Railway Company, and the mortgage executed May 25, 1881, by the Cincinnati Northern Railway Company to the Central Trust Company, of its property, rights and franchises, for the payment of $1,000,000 of bonds theretofore issued by the Spring Grove, Avondale and Cincinnati Railway Company, secured on its road, the lien of the latter mortgage to be second only to that of the mortgage of November 17, 1880; a mortgage by the Cincinnati Northern Railway Company, of May 25, 1881, to the same trustee, of its property, rights and franchises, to secure an issue of $1,000,000 of income bonds, payable out of the net earnings, of the last named railway company; and the consolidation of the above railroad companies under the name of the Toledo, Cincinnati and St. Louis Railroad Company, and the assumption by the consolidated company of the debts secured by each of said mortgages.

The prayer of the bill was, that all of said

mortgaged property be sold, the proceeds to be applied to the payment of the bonds and coupons secured by the first of the above mortgages, and the balance, if any, to be paid to the [486] Central Trust Company, for the holders of bonds secured by the second and third mortgages; and that until such sale was had, a receiver be appointed of all the property and premises embraced by the first mortgage, with power to maintain and operate the Cincinnati Northern Railway, including the road leased from the Spring Grove, Avondale and Cincinnati Railway Company, to collect rents, etc.

Upon the motion of the Central Trust Company, an order was passed, October 20, 1883, appointing a receiver, who was directed to take possession, maintain and operate the Cincinnati Northern Railway, forty-two miles in length, constructed and to be constructed, and also the Spring Grove, Avondale and Cincinnati Railway Company.

On the 8th of December, 1883, the following order was made by the circuit court in this cause:

"It appearing to the court that the Superior Court of Cincinnati, in general term, in cause No. 2350, wherein Jacob Seasongood, Louis Seasongood, and Bernard G. Stall are plaintiffs and the Central Trust Company of New York and others are defendants, has found that certain real estate belonging to said plaintiffs, situate in the City of Cincinnati, Ohio, and being lots 13, 14, and 15 of S. Kemper's subdivision, in section 7, town. 3, fractional range 2, Miami purchase, is occupied by the Cincinnati Northern Railway Company under an agreement entered into between said plaintiffs and the Miami Valley Narrow Gauge Railway Company, the predecessors of the said The Cincinnati Northern Railway Company, and that there is due to said plaintiffs thereon the sum of seventy-eight hundred and six and $\frac{22}{100}$ ($7,806.22) dollars, with interest on the same from the 29th day of May, 1883, and that said plaintiffs are entitled to be paid on the 29th day of August, 1886, under said agreement, the further sum of sixteen thousand five hundred ($16,500.00) dollars, with interest thereon at the rate of 7 per cent per annum, payable quarterly, from the 29th day of May, 1883, and all taxes they may be required to pay in the mean time; and it further appearing to this court that said Superior Court of Cincinnati has adjudged and decreed that said plaintiffs have a [487] first and prior lien on said lots for the payment of said sums so found to be owing to them, and has ordered that in the event of so much of said lots as may not be necessary for the purposes of said railway company being sold and proving insufficient to pay said claims, then that the whole of said railway be sold to pay the same; and it further appearing to this court that the portion of said lots not necessary for the purposes of said railway are insufficient to pay said claims, and that an order of sale has been issued by said superior court directing the appraisement and sale of the whole of said railway, and that said parties are proceeding to bring the same to sale in pursuance thereof; and it further appearing to the court that such sale would be contrary to the best interests of all concerned, and that it is necessary to the operation of said road by the receiver heretofore appointed herein that said proceedings to sell should be stopped; and it further appearing to the court that said parties are willing to have so much of said lots as are not necessary for railroad purposes sold by the master commissioner appointed by said superior court in said cause, and the proceeds arising therefrom credited upon the certificate of indebtedness hereinafter provided to be issued to them, and to accept as full satisfaction of all their remaining rights under said decree (and enter satisfaction of the same and convey said right of way to said railway) certificates of indebtedness, to be issued by the receiver herein, bearing interest at the rate of six (6) per cent per annum and payable when the said railroad shall be sold by the order of this court herein, unless sooner paid out of the earnings from the operation of said road or otherwise, as the court may order, provided the same be made a first lien upon said road, except only such other certificates as the court may find it necessary to issue, with all which they shall be of equal priority:

"Now, therefore, in consideration of the premises, it is ordered by the court that the master commissioner in said case in said superior court be authorized to proceed and sell under his order said outlying strips which were found not to be necessary for said right of way, and, after paying the costs of said action and taxes, to apply the balance of the purchase money on said certificate and pay the same to [488] said Seasongoods and Stall.

"And by agreement it is ordered that in the event that said case in said superior court shall be taken to the Supreme Court of Ohio by motion for leave to file within thirty (30) days, and leave shall be granted and bond given, then said certificate to be returned.

"Nothing herein contained shall prejudice the right of defendant to prosecute a proceeding in error in the Supreme Court of Ohio within said thirty (30) days.

"And it is ordered by the court that W. J. Craig, receiver herein, be, and he hereby is, authorized and directed to issue to said Jacob Seasongood, Louis Seasongood, and Bernard G. Stall his certificate of indebtedness in the sum of twenty-five thousand one hundred and seventy-six and $\frac{20}{100}$ ($25,176.20) dollars, that being the total amount of the said claims on this 8th day of December, 1883, and bearing interest at the rate of six per cent (6) per annum from date and payable on or before one year after date to the order of said parties, said certificate to be equal in priority with all other certificates that may be issued herein, but to be prior to all other liens and to be paid first upon sale of this road, and the same to deliver to said parties upon the entering by them of satisfaction of all their claims under said judgment and decree in said superior court, and the execution and delivery by them of a proper deed of conveyance of said lots to said Cincinnati Northern Railway Company; and it is further ordered that upon the consummation thereof the said The Cincinnati Northern Railway Company shall stand subrogated to all the rights the said parties had against the said The Miami Valley Narrow Gauge Railway Company and the stockholders thereof."

Jacob Seasongood having died, the court, by

an order made February 12, 1884, directed the receiver to issue the certificate provided for in the previous order to Lewis Seasongood, and Bernard G. Stall, survivors, "upon the same terms and conditions named in said original order."

On the 20th of November, 1885, the following order was made:

[489] "It appearing to the court from the report of the master commissioner of the sale of the Cincinnati Northern Railroad that there are sufficient of the proceeds of said road to pay the full amount of the claim of J. and L. Seasongood and Stall and interest, for which a receiver's certificate was issued to Lewis Seasongood and B. G. Stall, survivors of Jacob Seasongood, after paying all other certificates of the receiver of said Cincinnati Northern Railroad Company; that said money remains unpaid; that since said decree ordering said certificate to be issued said B. G. Stall and said Jacob Seasongood have died, leaving said Lewis Seasongood the sole survivor; that the certificate was issued to Lewis Seasongood and B. G. Stall as survivors after the death of said Jacob Seasongood, and that out of the proceeds of sale of said outlying strips of land on July 8th, 1884, there was paid to said Lewis Seasongood and B. G. Stall, survivors, the sum of $525.33, which is all that was left after paying the costs of said action in the Superior Court of Cincinnati and some taxes on said strips, which should be credited as of that date upon said certificate, which leaves a balance, with interest computed to November 12th, 1885, of $27,562.90 due and owing on said decree:

"It is therefore ordered by the court that the purchasers of said railroad pay to the clerk of this court said sum of $27,562.90, with interest from November 12th, 1885, until paid, and that said clerk pay forthwith to said Lewis Seasongood, survivor, said sum of $27,562.90, and until so paid he is entitled and shall be paid by said clerk 6 per cent interest thereon from November 12th, 1885.

"It appears further to this court that said case in said Superior Court of Cincinnati was not carried to the Supreme Court of Ohio.

"Thereupon the Central Trust Company, complainant, prays an appeal in open court of this cause to the supreme court, and this court grants the appeal and fixes the amount of bond at double the amount of said claim and interest, to wit, fifty five thousand and five hundred dollars, which bond shall operate as a supersedeas of this order and decree."

It appears from the record of the case in the [490] Superior Court of Cincinnati that the parts of the lots, ascertained not to be necessary for the roadway, were sold by the commissioner of that court, one bringing $861 and the other $201, and that the sale was confirmed June 17, 1884.

On the 29th of March, 1884, a decree of foreclosure and sale was entered in the court below, and pursuant thereto the Cincinnati Northern Railway was sold, on the 27th of June, 1885. It brought the sum of $200,000, which was less than its value, the purchasers being the bondholders represented by the Central Trust Company. It is stipulated by the parties that the portion of the proceeds of the sale which by the order of November 20, 1885, was directed to be paid to the appellees, would otherwise go to the appellant.

Messrs. Wm. M. Ramsey and **Lawrence Maxwell, Jr.**, for appellant.

Messrs. **C. B. Matthews, J. A. Jordan** and *I. M. Jordan*, for appellee:

Where a vendor has a lien upon property which, by agreement, has gone into the possession of a railroad company and become a part of its roadbed, he may have one of two remedies: he may either have specific performance decreed, or else may establish his lien, and have a sale of the whole road.

Munns v. *Isle of Wight R. Co.* L. R. 5 Ch. App. 414, L. R. 8 Eq. 653; *Earl St. Germans* v. *Crystal Palace R. Co.* L. R. 11 Eq. 568; *Keane* v. *Athenry & E. J. R. Co.* 19 Week. Rep. 43, 318; *Walker* v. *Ware R. Co.* 35 Beav. 52; *Bishop of Winchester* v. *Mid-Hants R. Co.* L. R. 5 Eq. 17; *Wing* v. *Tottenham & H. J. R. Co.* L. R. 3 Ch. 740; *Allgood* v. *Merrybent & D. R. Co.* L. R. 33 Ch. Div. 571.

The Northern Railway Company could acquire no property in the lots owned by the appellee's predecessors, except under the conditions of the contract under which possession had been originally taken.

Pfeifer v. *Sheboygan & F. du L. R. Co.* 18 Wis. 155; *Fries* v. *Southern Pa. R. Co.* 85 Pa. 73.

Mr. Justice **Harlan** delivered the opinion [491] of the court:

The motion of appellee to dismiss this appeal is denied. If, as contended by him, the order of December 8, 1883, was one from which an appeal would lie, the appeal prayed and allowed on the 20th of November, 1885, would bring that order before us; for, although the bond required by the court was made to operate as a supersedeas only of the order of the latter date, the appeal asked and granted was "of this cause," that is, of the whole cause as far as it had then progressed.

Conceding appellee's lien on the lots to be prior to its lien on so much of the railroad as crossed those lots, the appellant denies that appellee had a lien upon the entire road of the Cincinnati Northern Railway Company. The proceeds of the sale of the whole road, it is insisted, must be distributed between the appellant and the appellee, upon the basis of the proportionate value of the parts upon which their respective liens rested; not necessarily, the mathematical proportion of the three hundred and twenty feet of the railroad covering the lots in question to the entire length of the road, forty-two miles, but in the proportion of the fair value, all things considered, of the former to the latter. The precise mode of ascertaining this value was not suggested in the argument.

We are of opinion that the appellant is not in a condition to raise the question just stated. It was a party to the suit in the state court, the decree in which provided for a sale of the entire [492] road, in the event the sum found to be due the present appellee was not paid by the sale of such parts of the lots in question as were not needed for the railroad. That decree, even if erroneous, was binding upon all the parties to

the suit in which it was rendered, until modified or reversed by the Supreme Court of Ohio. It was not open to collateral attack by any of those parties in a separate suit brought by them in the Circuit Court of the United States after the jurisdiction of the state court attached. No order in the former court could interfere with or suspend the sale which the state court had directed to be made. The only way in which such suspension could have been effected was by means of an arrangement that would be satisfactory to the present appellee, in whose behalf the state court had ordered a sale of the entire road. The order made in the circuit court on the 8th of December, 1883, shows upon its face that that court was informed as to the exact relation of the parties to the suit in the state court. It declared, without objection by any of the parties, that the sale then about to take place of the entire road, under the order of the state court, "would be contrary to the best interests of all concerned," and that it was necessary to the operation of the road by the receiver of the circuit court that the proceedings in the state court for a sale be stopped. The mode adopted to effect that end is indicated in the above order. We need not, however, stop to inquire whether it was proper for the circuit court to issue receiver's certificates for claims of the character of those held by the appellee. Upon that subject we express no opinion. We are relieved of any duty to consider that question, because it is apparent that the order of December 8, 1883, was the result of an agreement or arrangement between the appellee and the Central Trust Company—the latter representing in this cause the holders of bonds secured by the mortgage of November 17, 1880—and also because of the surrender by the appellee, in consideration of the receiver's certificate for the amount of his claims, of the rights accorded to him by the decree in the state court. The appellee cannot be restored to his rights under the decree of the state court, and it would be [493] inequitable to permit the appellant, representing those who purchased the property under the decree of the circuit court, now to raise any question as to the validity of the receiver's certificates, which it agreed might be issued to the appellee. It remained quiet for nearly two years, and until after the property had been sold, and after the sale had been confirmed to those it represented, before making an issue as to the propriety or validity of the order of December 8, 1883. The bondholders are concluded, under the circumstances disclosed in the record, by what their representative did, or assented to being done, in order to induce the appellee to surrender the rights secured by the judgment of the state court.

The decree of the Circuit Court is affirmed.

---

[435] THE TOWN OF ANDES, *Plf in Err.*,

v.

ALBERT SLAUSON.

(See S. C. Reporter's ed. 435-439.)

Review of judgments of circuit court by writ of error—bill of exceptions—trial, by jury, or by referee—trial by judge at chambers—when questions may not be reviewed.

1. The right of review, by this court, of the judgments of the circuit courts, by bill of exceptions and writ of error, is limited to questions of law appearing on the face of the record, and does not extend to matters of fact or discretion.

2. Questions of law arising from the trial of an issue of fact cannot be made part of the record by bill of exceptions, unless the trial is by jury, or by the court after due waiver in writing of a jury trial.

3. When the trial is by rule of court and consent of parties before a referee or arbitrator, no question of law can be reviewed on error, except whether the facts found by him support the judgment below.

4. Where the pleadings present issues of fact, triable by a jury only, and there is no waiver of a jury trial, but the case is tried, by consent of the parties, before the judge at chambers, such trial is neither a trial by jury, nor a trial by the court, but a trial by the judge as a referee, and the bill of exceptions allowed at such trial is irregular, and the facts and rulings stated therein cannot be regarded or reviewed by this court.

5. In such case, where the questions argued by the plaintiff in error do not appear of record independently of the bill of exceptions, this court has no authority to pass upon them.

[No. 225.]

Argued March 29, 1889. Decided April 15, 1889.

IN ERROR to the Circuit Court of the United States for the Northern District of New York, to review a judgment in favor of plaintiff upon coupons of bonds of the Town of Andes. *Affirmed.*

Statement by *Mr. Justice* **Gray**:

Albert Slauson brought two actions against the Town of Andes in the Circuit Court of the United States for the Northern District of New York, alleging in the complaint in each action that he was a citizen of the State of New Jersey and the defendant was a municipal corporation of the State of New York; that the defendant subscribed to the stock of the Delhi and Middletown Railroad Company, and issued its bonds, with coupons for interest annexed, in payment thereof, in accordance with the law of New York of 1869, chapter 907; and that certain of those coupons passed into the possession and became the property of the plaintiff in good faith and for a valuable consideration, and payment thereof was duly demanded at maturity and refused. The amount for which judgment was asked in the first action was $2,709 and interest, and in the second action $2,044 and interest.

In the answer to each complaint, the defendant admitted that it was a municipal corporation of the State of New York, but denied all the other allegations of the complaint, and alleged that the coupons sued on were in fact the property of citizens of New York, in whose behalf and for whose benefit the action was prosecuted; that at the time of its commencement an action was pending in the Supreme Court of the State of New York, brought by residents and taxpayers of the defendant town against [436] the holders of the bonds and coupons, to restrain their transfer and collection, on the ground that they were illegal and void; and that if the plaintiff held any of the coupons he took them without consideration, and for the purpose of avoiding and nullifying the effect of any judgment that might be recovered in that court, and of enabling him to bring an

tion in the Circuit Court of the United States.

The subsequent proceedings, as shown by the record transmitted to this court, were as follows:

1st. An order, filed June 18, 1884, for trial before the District Judge at chambers, in these words:

"At a stated term of the Circuit Court of the United States of America for the Northern District of New York, in the Second Circuit, held at Canandaigua, on the 18th day of June, A. D. 1884.

"Present: The Honorable A. C. Coxe, *Judge*.

"Albert Slauson against The Town of Andes. No. 2512.

"Albert Slauson against The Town of Andes. No. 2513.

"These actions having been each moved for trial on the part of the plaintiffs therein at this term of court, and application for a postponement having been made on behalf of the defendant, it is now, at the suggestion of the court and by consent of parties, ordered that the said actions pass said term, and be tried before Hon. A. C. Coxe, at his chambers at Utica, without a jury, with the same force and effect as if tried at a circuit term of this court, such trial to be had within two weeks after the first day of September next, at a time to be fixed by the judge, unless the parties shall agree; and if it shall appear to said judge upon such trial that there are questions of fact arising upon the issues therein, the same are to be submitted to a jury at the November Term, provided the said questions of fact are of such a character that the judge would submit them to a jury if one were present; and that no further notice of trial is required. ALFRED C. COXE."

[437] 2d. and 3d. Two orders, each entitled "At a stated term of the Circuit Court for the Northern District of New York, held at Utica on October 1, 1884, Present Hon. A. C. Coxe, *Judge*," and signed by him, and reciting the trial of the two actions together by consent of parties before him at his chambers in Utica—the one, an order filed November 15, 1884, for the consolidation of the two actions; and the other, an order filed December 4, 1884, by which the judge made a general finding for the plaintiff upon the facts, and found that in the consolidated action there was due to the plaintiff from the defendant the sum of $5,316.46 (being the aggregate of the sums due in both actions at the day of trial, October 1, 1884), with interest, and directing judgment for the plaintiff accordingly, with costs.

4th. The judgment of the court, enrolled and signed by the clerk December 13, 1884, by which, after reciting the bringing of the two actions, the order and stipulation of June 18, 1884, the trial of the actions accordingly before the judge on October 1, 1884, the order of consolidation, and the judge's finding as aforesaid, it was adjudged that the plaintiff recover of the defendant the said sum of $5,316.46, with interest from the day of trial, amounting to $64.68, and costs taxed at $260.70, amounting in the aggregate to $5,641.84.

5th. A bill of exceptions, signed and sealed by the judge October 13, 1885, and filed October 21, 1885, referring to the order of June 18, 1884, and stating that the actions were afterwards brought on for trial together by consent of parties before the judge, without a jury, at his chambers in Utica, on October 1, 1884; setting forth in full the evidence introduced by both parties at the trial; and stating that the defendant excepted to the admission of specific portions of the plaintiff's evidence, and asked permission under the stipulation and order of June 18, 1884, to submit to a jury the questions of good faith and of the collusive transfer of the coupons in suit and of the ownership thereof, and that the motion was denied, and exception taken by the defendant to the denial, as well as to the judge's final decision, order and finding.

6th. The opinion of the judge in favor of the plaintiff, endorsed "Decision. Filed November 12, 1884."

The defendant sued out this writ of error.

Mr. **I. H. Maynard**, for plaintiff in error:

Defendant is not a *bona fide* holder of the bonds and coupons in suit.

South Ottawa v. *Perkins*, 94 U. S. 262 (24: 155); *Pendleton Co.* v. *Amy*, 80 U. S. 13 Wall. 297(20: 579); *Kenicott* v. *Wayne Co.* 83 U. S. 16 Wall. 452 (21: 319); *St. Joseph Twp.* v. *Rogers*, 83 U. S. 16 Wall. 644 (21: 328); *Coloma* v. *Eaves*, 92 U. S. 484 (23: 579); *McClure* v. *Oxford Twp.* 94 U. S. 432 (24: 129); *Ogden* v. *Daviess Co.* 102 U. S. 634 (26: 268); *Anthony* v. *Jasper Co.* 101 U. S. 696 (25: 1007); *Hoff* v. *Jasper Co.* 110 U. S. 53 (28: 68); *Stewart* v. *Lansing*, 104 U. S. 505 (26: 866); *Smith* v. *Sac Co.* 78 U. S. 11 Wall. 139 (20: 102); *Cowdrey* v. *Canseadea*, 16 Fed. Rep. 532.

There are no recitals in the bonds which estop the plaintiff in error from alleging the want of jurisdiction of the county judge to act in the matter.

Warren Co. v. *Marcy*, 97 U. S. 104 (24: 980); *Buchanan* v. *Litchfield*, 102 U. S. 278 (26: 138); *Independent School Dist.* v. *Stone*, 106 U. S. 183 (27: 90); *Carroll Co.* v. *Smith*, 111 U. S. 556 (28: 517); *Daviess Co.* v. *Dickinson*, 117 U. S. 657 (29: 1026); *Northern Nat. Bank* v. *Porter Twp.* 110 U. S. 608 (28: 258); *Dixon Co.* v. *Field*, 111 U. S. 83 (28: 360).

The payment of interest upon the bonds by means of forced tax levies upon the taxable property of the town does not estop plaintiff from now insisting upon their invalidity, the defect in their issue being such that all persons are chargeable with notice thereof.

Purdy v. *Lansing*, 128 U. S. 557 (*ante*, 531); *Cowdrey* v. *Canseadea*, 16 Fed. Rep. 532: *Thomas* v. *Lansing*, 14 Fed. Rep. 618.

Mr. **John B. Gleason**, for defendant in error:

The full and abundant recognition of the validity of these bonds by the Town of Andes, evidenced by its receipt and retention of the stock in the railroad, and by the payment of interest upon the bonds for ten years, and by the payment of a portion of the principal is a complete estoppel.

Rich v. *Mentz*, 18 Fed. Rep. 52; *Whiting* v. *Potter*, 18 Blatchf. 165; *Oswego First. Nat. Bank* v. *Wolcott*, 19 Blatchf. 370; *Calhoun* v. *Delhi & M. R. Co.* 28 Hun, 379, 398-402; 1 Dillon, Mun. Corp. p. 548; *Coloma* v. *Eaves*, 92 U. S. 484 (23: 579); *Moultrie Co.* v. *Rockingham*

Sav. Bank, 92 U. S. 631 (23: 631); *Marcy* v. *Oswego*, 92 U. S. 637 (23: 748); *Douglas Co.* v. *Bolles*, 94 U. S. 104 (24: 46); *Weyauwega* v. *Ayling*, 99 U. S. 112 (25: 470); *Calhoun Co.* v. *Galbraith*, 99 U. S. 214 (25: 410); *Brooklyn* v. *Ætna L. Ins. Co.* 99 U. S. 362 (25: 416); *Wilson* v. *Salamanca*, 99 U. S. 499 (25: 330); *Orleans* v. *Platt*, 99 U. S. 676 (25: 404); *Lyons* v. *Munson*, 99 U. S. 684 (25: 451); *Douglass* v. *Pike Co.* 101 U. S. 677 (25: 968); *Marshall Co.* v. *Schenck*, 72 U. S. 5 Wall. 772 (18: 556); *Marsh* v. *Fulton Co.* 77 U. S. 10 Wall. 676 (19: 1040).

Purchasers of negotiable securities are not chargeable with constructive notice of the pendency of a suit affecting the title or validity of the securities.

Warren Co. v. *Marcy*, 97 U. S. 96 (24: 977); *Carroll Co.* v. *Smith*, 111 U. S. 556 (28: 517); *Scotland Co.* v. *Hill*, 112 U. S. 183 (28: 692).

[438] *Mr. Justice* **Gray** delivered the opinion of the court:

The authority of this court to review the judgments of the circuit court by bill of exceptions and writ of error is regulated exclusively by the Acts of Congress and the practice of the courts of the United States without regard to the statutes of the State or the practice of its courts. *Chateaugay Co. Petitioner*, 128 U. S. 544 [*ante*, 508]. The right of review is limited to questions of law appearing on the face of the record, and does not extend to matters of fact or of discretion; questions of law arising upon the trial of an issue of fact cannot be made part of the record by bill of exceptions, unless the trial is by jury, or by the court after due waiver in writing of a jury trial; and when the trial is by rule of court and consent of parties before a referee or arbitrator, no question of law can be reviewed on error, except whether the facts found by him support the judgment below. *Campbell* v. *Boyreau*, 62 U. S. 21 How. 223 [16: 96]; *Bond* v. *Dustin*, 112 U. S. 604, 606 [28: 835]; *Paine* v. *Central Vermont R. Co.* 118 U. S. 152 [30: 193].

In the present case, there was no demurrer, or case stated, or special verdict, or finding of facts by the court or by a referee, presenting a pure question of law. But the pleadings presented issues of fact which, in the legal and regular course of proceeding, could be tried by a jury only, and at a stated term of the court, unless the parties either in writing waived a jury and submitted the case to the court's decision, or else agreed that the case should be tried and determined by a referee. There was no waiver of a jury trial and submission of the determination of all issues of fact to the court. But the case was tried by consent of the parties before the judge at chambers under an order providing that it should be so tried, and that "If it shall appear to the judge upon such [439] trial that there are questions of fact arising upon the issues therein, of such a character that the judge would submit them to the jury if one were present," they should be submitted to a jury at the next term of the court; and the only finding of the judge was a general finding for the plaintiff.

The trial thus ordered, consented to and had, was neither a trial by jury, nor a trial by the court, in accordance with the Acts of Congress, but was a trial by the judge as a referee. The trial deriving its whole efficacy from the consent of the parties, the bill of exceptions allowed at that trial was irregular and unavailing, and the facts stated in that bill of exceptions cannot be regarded, nor the rulings stated therein reviewed, by this court. As the questions argued by the plaintiff in error do not appear of record independently of the bill of exceptions, this court has no authority to pass upon them, and no error is shown in the judgment afterwards rendered by the circuit court. *Campbell* v. *Boyreau*, above cited; *Lyons* v. *Lyons Bank*, 19 Blatchf. 279.

Judgment affirmed.

J. FRIEDLANDER ET AL., *Plffs. in Err.*, [416]
v.
THE TEXAS AND PACIFIC RAILWAY COMPANY.

(See S. C. Reporter's ed. 416–426.)

Railroad company not bound by bill of lading issued by its agent for goods not shipped—common carrier, when not liable—company not estopped to deny agent's act—not company's agent—rights of innocent assignee.

1. The agent of a railroad company at one of its stations cannot bind the company by the execution of a bill of lading for goods not actually placed in his possession, and by its delivery to a person fraudulently pretending, in collusion with such agent, that he had shipped such goods, in favor of a party without notice, with whom, in furtherance of the fraud, the pretended shipper negotiates a draft, with the false bill of lading attached.

2. No recovery can be had against a common carrier for goods never actually in its possession for transportation because one of its agents, having authority to sign bills of lading, by collusion with another person, issues the document in the absence of any goods.

3. The company, under such circumstances, is not estopped from denying that it had clothed such agent with apparent authority to do an act outside the scope of his employment and of its own business; the agent was not the company's agent in the transaction.

4. Although fraud, perpetrated through the device of a false bill of lading, may work injury to an innocent party, this cannot be redressed by a change of victim.

[No. 236.]

Argued April 4, 5, 1889. Decided April 15, 1889.

IN ERROR to the Circuit Court of the United States for the Eastern District of Texas, to review a judgment for defendant in an action to recover for the nondelivery of goods named in an alleged bill of lading of which the plaintiffs were assignees for value. *Affirmed.*

Statement by *Mr. Chief Justice* **Fuller:**

Friedlander & Co. brought suit in the District Court of Texas, in and for the County of Galveston, against the Texas and Pacific Railway Company, to recover for the nondelivery of certain cotton named in an alleged bill of lading hereinafter described, of which they claimed to be assignees for value, their petition, after counting upon said bill of lading, thus continuing:

"That the said defendant, fraudulently contriving to avoid its liability to these plaintiffs, pretends and alleges that the said cotton was

not so delivered as in and by said bill of lading is recited and acknowledged, but that the said [417] bill of lading was executed without the receipt by its said agent of any of said cotton, all of which said pretenses on the part of the defendant, plaintiffs allege are untrue; but they say that even if it be true that no cotton was delivered to said defendant as in and by said bill of lading is recited and acknowledged, yet is the defendant estopped from setting up that fact in defense of plaintiff's cause of action upon said bill of lading, because these plaintiffs say that the said bill of lading was executed in form negotiable and transferable by indorsement under the usage and customs of merchants and that these plaintiffs, relying upon the validity of said bill of lading in all respects and upon the facts therein stated, that said cotton had been delivered to said defendant as aforesaid, and that defendant had contracted to carry and deliver said cotton as aforesaid, advanced to the said Joseph Lahnstein and paid out upon his order and at his request and in consideration of his said transfer of said bill of lading to these plaintiffs the sum of eight thousand dollars on, to wit, the 10th day of November, 1883, and that said payment was made and advanced upon the faith of the recitals and effect of said bill of lading as a contract to deliver the cotton therein mentioned as aforesaid, and that if the said cotton was never received by defendant, yet ought it to be held to the terms of the said bill of lading for the indemnification of these plaintiffs for said payment, with interest thereon from the date thereof, because of the fraud practiced by the said agent upon these plaintiffs in the issuance of said bill of lading in the ordinary form and manner wherein he was authorized by the defendant to act, and defendants are estopped to deny that said cotton was received as against the claims of these plaintiffs for damages on account of defendant's failure to comply with said bill of lading to the extent of eight thousand dollars, with interest thereon, at the rate of 8 per cent per annum, from the date of payment thereof as aforesaid; and if it be true, as alleged, that defendant received said cotton in said bill of lading mentioned, then plaintiffs claim of defendant the full value thereof, to wit, the sum of fifteen thousand dollars, with interest thereon from and after the 6th day of December, 1883, when and before which time defendant [418] should have delivered said cotton under said bill of lading, according to the true intent and meaning thereof."

Defendant demurred, and also answered, denying "all and singular the allegations in the petition contained." The case was subsequently removed to the Circuit Court of the United States for the Eastern District of Texas, whereupon by leave the defendant amended its answer by adding these further averments:

"That one E. D. Easton, on the 6th of November, 1883, was the station agent of defendant at Sherman Station, in Grayson County, Texas, on the Eastern Division of defendant's line in Texas, and that as such agent he was authorized to receive cotton and other freight for transportation and to execute bills of lading for such cotton and other freight by him received for the purpose of transportation by defendant.

"That on the said 6th day of November, 1883, the said Easton, combining and confederating with one Joseph Lahnstein, did fraudulently and collusively sign a certain bill of lading purporting to be his act as agent of defendant, whereby he falsely represented that defendant had received from the said Joseph Lahnstein two hundred bales of cotton in apparent good order, to be transported from Sherman to New Orleans, La., and did deliver the said false bill of lading to the said Joseph Lahnstein; and defendant says that in point of fact the said bill of lading was executed by the said Easton fraudulently and collusively with the said Lahnstein without receiving any cotton for transportation, such as was represented in said bill of lading, and without the expectation on the part of the said Easton of receiving any such cotton; that the said pretended bill of lading was the one that is set out in the petition of the plaintiffs and was false, fraudulent, and fictitious, and was not executed by defendant nor by its authority, and that the said Easton only had authority as agent aforesaid to execute and deliver bills of lading for freights actually received by him for transportation."

The cause was submitted to the court for trial, a jury being waived, upon the following agreed statement of facts:

"1st. On November 16th, 1883, at Sherman Station, in Grayson County, Texas, on the [419] Eastern Division of the Texas and Pacific Railway Company, E. D. Easton, agent for the defendant at said station, executed as such agent a bill of lading, of which a copy is hereinafter given, and delivered the same to Joseph Lahnstein, the person named in said bill of lading.

"2d. That said Easton was at the time and place aforesaid the regularly authorized agent of the defendant for the purpose of receiving for shipment cotton and other freight for transportation by defendant over and along its line from Sherman Station aforesaid, and that said bill of lading was in the usual form and made out upon the usual printed blanks in use by said defendant at said station, and that said Easton was authorized by said defendant to execute bills of lading for cotton and other freight by him received for the purpose of transportation by the defendant.

"3d. That the said Joseph Lahnstein indorsed said bill of lading by writing his name across the back thereof and drew a draft on the plaintiffs in this cause on or about November 6th, 1883 (of which draft a copy is hereinafter given), for the sum of eight thousand dollars, payable at sight to the order of Oliver & Griggs, and attached said draft to said bill of lading so indorsed, and on or about Nov. 6th, 1883, forwarded the same through said Oliver & Griggs for presentation to and payment by the plaintiffs in this cause; that in due course of business Oliver & Griggs forwarded said draft, with bill of lading attached, to New Orleans, where the same was presented to and paid by plaintiffs on or about November 10th, 1883.

"4th. That in paying said draft said plaintiffs acted in good faith and in the usual course of their business as commission merchants making advances upon shipments of cotton to

them for sale, and without any knowledge of any fraud or misrepresentation connected with said bill of lading and draft, and with the full and honest belief that said bill of lading and draft were honestly and in good faith executed, and that the cotton mentioned in said bill of lading had been in fact received by said defendant as represented in said bill of lading.

[420] "5th. That plaintiffs had previously paid one or more drafts upon similar bills of lading, signed by the said Easton as agent aforesaid, for cotton shipped them by said Joseph Lahnstein, for sale by plaintiffs as commission merchants for account of said Joseph Lahnstein, and that the cotton so previously advanced upon was received by plaintiffs in the due course of transportation, pursuant to the terms of the bills of lading upon which they made advances respectively, and the bill of lading of November 6th, 1883, was the first received by plaintiffs from said Lahnstein and not fulfilled by defendant.

"6th. That, in point of fact, said bill of lading of November 6th, 1883, was executed by said E. D. Easton fraudulently and by collusion with said Lahnstein and without receiving any cotton for transportation, such as is represented in said bill of lading, and without the expectation on the part of the said Easton of receiving any such cotton; that said Easton and said Lahnstein had fraudulently combined in one other case, whereby said Easton signed and delivered to the said Lahnstein a similar bill of lading for three hundred bales of cotton which had not been received, and which the said Easton had no expectation of receiving, the latter named bill of lading having been given early in November, 1883, but that plaintiffs in this suit had no knowledge whatever of the facts stated in this (sixth) clause until after they had in good faith paid and advanced upon the bill of lading sued on and the draft thereto attached, to them presented as aforesaid, the sum of $8,000.00, as hereinbefore stated.

"7th. That the cotton mentioned in said bill of lading (of November 6th, 1883), had the same been actually received by defendant and forwarded to plaintiffs, would have been worth largely more than the amount so advanced by said plaintiffs as aforesaid—that is to say, would have been worth about $10,000.00, and that, except that the cotton was not received nor expected to be received by said agent when said bill of lading was by him executed as aforesaid, the transaction was, from first to last, customary and in the usual course of trade, and in accordance with the usage and customs of merchants and shippers and receivers of cotton.

[421] "8th. That on said November 6th, 1883, and long prior thereto and ever since, the headquarters and main offices of defendant were and have been connected by railroad and telegraph communication with all stations on defendant's railroad and with Sherman Station aforesaid, among others.

"9th. That the defendant is a corporation created and existing and domiciled as alleged in the petition.

"10th. That on November 10th, 1883, said Joseph mentioned above was insolvent, and that he has been insolvent ever since and is so now."

Then follows bill of lading, indorsed by Lahnstein and with draft on Friedlander & Co. for $8,000 attached, acknowledging the receipt from Joseph Lahnstein of "two hundred bales of cotton in apparent good order, marked and numbered as below, to be transported from Sherman to New Orleans, La., and delivered to the consignees or a connecting common carrier," and proceeding in the usual form, Lahnstein being named as consignee, and directions given "Notify J. Friedlander & Co., New Orleans, La." The circuit court found for the defendant, and judgment was rendered accordingly, and writ of error thereupon brought to this court.

Upon the argument certain parts of the statutes of the State of Texas were cited, with especial reference to the provision as to common carriers "that the trip or voyage shall be considered as having commenced from the time of the signing of bill of lading." Title 18, Carriers, Ch. 1, Art. 277; Art. 280; Art. 283 [Act February 4, 1860]; Title 84, Railroads, Ch. 10, Art. 4258 b, § 8 [Approved April 10, 1883, General Laws, Texas, 1883, p. 69]; Sayles' Texas Civil Statutes, 1888, Vol. I, pp. 131, 134, 135; Vol. II, p. 450.

Mr. **A. G. Safford,** for plaintiffs in error:

The very great preponderance of reason and authority favors the contention of the plaintiffs.

Armour v. *R. Co.* 65 N. Y. 111; *Batavia Bank* v. *New York, L. E. & W. R. Co.* 7 Cent. Rep. 822, 106 N. Y. 195; *Relyea* v. *New Haven Rolling Mill Co.* 42 Conn. 579; *Brooks* v. *New York, L. E. & W. R. Co.* 1 Cent. Rep. 123, 108 Pa. 529; *Wichita Sav. Bank* v. *Atchison, T. & S. F. R. Co.* 20 Kan. 519; *McNeil* v. *Hill*, Woolw. 96; *Sioux City & P. R. Co.* v. *First Nat. Bank*, 10 Neb. 556; *St. Louis & I. M. R. Co.* v. *Larned*, 108 Ill. 293.

The author of the misfortune shall not himself escape the consequence and cast the burden upon another.

Bank of U. S. v. *Davis*, 2 Hill, 465; *New York & N. H. R. Co.* v. *Schuyler*, 38 Barb. 536; 34 N. Y. 30; *Hern* v. *Nichols*, 1 Salk. 289; *Drew* v. *Kimball*, 43 N. H. 285; Morawetz, Corp. § 65 and cases cited.

A corporation is liable for the deceit or false representation of its agent.

Morawetz, Corp. §§ 65, 91, and cases cited.

The corporation is liable to innocent third persons who are misled by the transaction.

First Nat. Bank v. *Lanier*, 78 U. S. 11 Wall. 369 (20: 172); *Bridgeport Bank* v. *New York & N. H. R. Co.* 30 Conn. 231; *New York & N. H. R. Co.* v. *Schuyler*, 34 N. Y. 30; *Holbrook* v. *New Jersey Zinc Co.* 57 N. Y. 618; *Sturges* v. *Bank of Circleville*, 11 Ohio St. 153; *Cocheco Nat. Bank* v. *Haskell*, 51 N. H. 116.

The act of a corporate agent is quite similar to the act of one partner in the absence of his associates.

Rapp v. *Latham*, 2 Barn. & Ald. 795; *Hume* v. *Bolland*, Ry. & Mood. 371; *Beach* v. *State Bank*, 2 Ind. 488; *Doremus* v. *McCormick*, 7 Gill, 49; *Sweet* v. *Bradley*, 24 Barb. 549; *Hawkins* v. *Appleby*, 2 Sandf. 421; *Griswold* v. *Haven*, 25 N. Y. 595; *French* v. *Rowe*, 15 Iowa, 563.

Messrs. John F. Dillon and **Winslow S. Pierce,** for defendant in error:

The agent of the railway company had no

authority to issue bills of lading for cotton not actually received by him for transportation, and bills so issued cannot impose any liability upon the railway company to deliver the goods therein described; but it may be shown, even as against an innocent indorsee for value, that no goods were ever received for carriage.

Lickbarrow v. *Mason*, 2 T. R. 77; *Grant* v. *Norway*, 2 Eng. L. & Eq. 337; *Hubbersty* v. *Ward*, 18 Eng. L. & Eq. 551; *Brown* v. *Powell D. S. Coal Co.* L. R. 10 C. P. 562; *The Freeman* v. *Buckingham*, 59 U. S. 18 How. 182 (15: 341); *The Loon*, 7 Blatchf. 244; *Robinson* v. *Memphis & C. R. Co.* 9 Fed. Rep. 129; *S. C.* 16 Fed. Rep. 57; *Pollard* v. *Vinton*, 105 U. S. 7 (26: 998); *Sears* v. *Wingate*, 3 Allen, 103; *Baltimore & O. R. Co.* v. *Wilkens*, 44 Md. 11; *Hunt* v. *Miss. Cent. R. Co.* 29 La. Ann. 446; *La. Nat. Bank* v. *Laveille*, 52 Mo. 380; *Williams* v. *R. Co.* 93 N. C. 42; *Chandler* v. *Sprague*, 5 Met. 306, 38 Am. Dec. 407, note; *Cox* v. *Bruce*, L. R. 18 Q. B. Div. 147; *St. Louis, I. M. & S. R. Co.* v. *Knight*, 122 U. S. 79 (30: 1077).

The question of active fraud or collusion upon the part of the agent in issuing the bill of lading is not material, and in no wise interferes with the application of the general rule to this case.

Balt. & O. R. Co. v. *Wilkens*, 44 Md. 11; *Robinson* v. *Memphis & C. R. Co.* 9 Fed. Rep. 129; *Coleman* v. *Riches*, 29 Eng. L. & Eq. 323; *The Freeman* v. *Buckingham*, 59 U. S. 18 How. 182 (15: 341); *Pollard* v. *Vinton*, 105 U. S. 7 (26: 998).

[423] *Mr. Chief Justice* **Fuller** delivered the opinion of the court:

The agreed statement of facts sets forth "that in point of fact said bill of lading of November 6, 1883, was executed by said E. D. Easton fraudulently and by collusion with said Lahnstein, and without receiving any cotton for transportation such as is represented in said bill of lading, and without the expectation on the part of the said Easton of receiving any such cotton;" and it is further said that Easton and Lahnstein had fraudulently combined in another case, whereby Easton signed and delivered to Lahnstein a similar bill of lading for cotton "which had not been received, and which the said Easton had no expectation of receiving;" and also "that, except that the cotton was not received nor expected to be received by said agent when said bill of lading was by him executed as aforesaid, the transaction was from first to last customary." In view of this language, the words "for transportation, such as is represented in said bill of lading," cannot be held to operate as a limitation. The inference to be drawn from the statement is that no cotton whatever was delivered for transportation to the agent at Sherman Station. The question arises, then, whether the agent of a railroad company at one of its stations can bind the company by the execution of a bill of lading for goods not actually placed in his possession, and its delivery to a person fraudulently pretending, in collusion with such agent, that he had shipped such goods in favor of a party without notice, with whom, in furtherance of the fraud, the pretended shipper negotiates a draft with the false bill of lading attached. Bills of exchange and promissory notes are representatives of money, circulating in the commercial world as such, and it is essential, to enable them to perform their peculiar functions, that he who purchases them should not be bound to look beyond the instrument, and that his right to enforce them should not be defeated by anything short of [424] bad faith on his part. But bills of lading answer a different purpose and perform different functions. They are regarded as so much cotton, grain, iron or other articles of merchandise, in that they are symbols of ownership of the goods they cover. And as no sale of goods lost or stolen, though to a *bona fide* purchaser for value, can devest the ownership of the person who lost them or from whom they were stolen, so the sale of the symbol or mere representative of the goods can have no such effect, although it sometimes happens that the true owner, by negligence, has so put it into the power of another to occupy his position ostensibly as to estop him from asserting his right as against a purchaser, who has been misled to his hurt by reason of such negligence. *Shaw* v. *Railroad Co.* [*Merchants Nat. Bank*], 101 U. S. 557, 563 [25: 892, 893]; *Pollard* v. *Vinton*, 105 U. S. 7, 8 [26: 998, 999]; *Gurney* v. *Behrend*, 3 El. & Bl. 633, 634. It is true that while not negotiable, as commercial paper is, bills of lading are commonly used as security for loans and advances, but it is only as evidence of ownership, special or general, of the property mentioned in them, and of the right to receive such property at the place of delivery.

Such being the character of a bill of lading, can a recovery be had against a common carrier for goods never actually in its possession for transportation, because one of its agents, having authority to sign bills of lading, by collusion with another person, issues the document in the absence of any goods at all?

It has been frequently held by this court that the master of a vessel has no authority to sign a bill of lading for goods not actually put on board the vessel, and, if he does so, his act does not bind the owner of the ship, even in favor of an innocent purchaser. *The Freeman* v. *Buckingham*, 59 U. S. 18 How. 182, 191 [15: 341, 345]; *The Lady Franklin*, 75 U. S. 8 Wall. 325 [19: 455]; *Pollard* v. *Vinton*, 105 U. S. 7 [26: 998.] And this agrees with the rule laid down by the English courts. *Lickbarrow* v. *Mason*, 2 T. R. 77; *Grant* v. *Norway*, 10 C. B. 665; *Cox* v. *Bruce*, L. R. 18 Q. B. Div. 147. "The receipt of the goods," said *Mr. Justice* Miller, in *Pollard* v. *Vinton*, *supra*, "lies at the foundation of the contract to carry and deliver. If no goods are actually received, there can be no valid contract to carry or [425] to deliver." "And the doctrine is applicable to transportation contracts made in that form by railway companies and other carriers by land, as well as carriers by sea," as was said by *Mr. Justice* Matthews in *Iron Mountain Railway* v. *Knight*, 122 U. S. 79, 87 [30: 1077, 1080], he adding also: "If Potter (the agent) had never delivered to the plaintiff in error any cotton at all to make good the 525 bales called for by the bills of lading, it is clear that the plaintiff in error would not be liable for the deficiency.

This is well established by the cases of *The Freeman* v. *Buckingham*, 59 U. S. 18 How. 182 [15: 341], and *Pollard* v. *Vinton*, 105 U. S. 7 [26: 998.]"

It is a familiar principle of law that where one of two innocent parties must suffer by the fraud of another, the loss should fall upon him who enabled such third person to commit the fraud; but nothing that the railroad company did or omitted to do can be properly said to have enabled Lahnstein to impose upon Friedlander & Co. The company not only did not authorize Easton to sign fictitious bills of lading, but it did not assume authority itself to issue such documents except upon the delivery of the merchandise. Easton was not the company's agent in the transaction, for there was nothing upon which the agency could act. Railroad companies are not dealers in bills of exchange, nor in bills of lading; they are carriers only, and held to rigid responsibility as such. Easton, disregarding the object for which he was employed, and not intending by his act to execute it, but wholly for a purpose of his own and of Lahnstein, became *particeps criminis* with the latter in the commission of the fraud upon Friedlander & Co.; and it would be going too far to hold the company, under such circumstances, estopped from denying that it had clothed this agent with apparent authority to do an act so utterly outside the scope of his employment and of its own business. The defendant cannot be held on contract as a common carrier in the absence of goods, shipment and shipper; nor is the action maintainable on the ground of tort. "The general rule," said Willes, *J.*, in *Barwick* v. *English Joint Stock Bank*, L. R. 2 Exch. 259, "is that the master is answerable for every such wrong of the servant or agent as is com-
[426] mitted in the course of the service and for the master's benefit, though no express command or privity of the master be proved." See also *Limpus* v. *London General Omnibus Co.* 1 Hurl. & C. 526. The fraud was in respect to a matter within the scope of Easton's employment or outside of it. It was not within it, for bills of lading could only be issued for merchandise delivered; and being without it, the company, which derived and could derive no benefit from the unauthorized and fraudulent act, cannot be made responsible. *British Mut. Banking Co.* v. *Charnwood Forest R. Co.* L. R. 18 Q. B. Div. 714.

The law can punish roguery, but cannot always protect a purchaser from loss, and so fraud perpetrated through the device of a false bill of lading may work injury to an innocent party, which cannot be redressed by a change of victim.

Under the Texas statutes the trip or voyage commences from the time of the signing of the bill of lading issued upon the delivery of the goods; and thereunder the carrier cannot avoid his liability as such, even though the goods are not actually on their passage at the time of a loss; but these provisions do not affect the result here.

We cannot distinguish the case in hand from those heretofore decided by this court, and in consonance with the conclusions therein announced *this judgment must be affirmed.*

WILLIAM H. ROBERTSON, Collector, [412]
Plff. in Err.,
v.
LOUIS A. SALOMON ET AL.

(See S. C. Reporter's ed. 412-416.)

Duty on beans—commercial designation—common designation.

1. Beans, as the term is used in the Customs Duties Act, are not garden seeds, but may be included under the term "vegetables."
2. The commercial designation is the first and most important designation to be ascertained in settling the meaning and application of the tariff laws.
3. But if the commercial designation fails to give an article its proper place in the classifications of the law, then resort must necessarily be had to the common designation; and evidence may be given to prove it.

[No. 446.]

Argued Jan. 16, 1889. Decided April 15, 1889.

IN ERROR to the Circuit Court of the United States for the Southern District of New York, to review a judgment in favor of plaintiffs for duties illegally exacted. *Reversed.*

The facts are stated in the opinion.

Mr. **G. A. Jenks**, *Solicitor-Gen.*, for plaintiff in error:

The protest is insufficient.

Elmes, Law of Customs, § 714; *Frazee* v. *Moffitt*, 20 Blatchf. 269; *Thomson* v. *Maxwell*, 2 Blatchf. 387-8; *Arthur* v. *Morgan*, 112 U. S. 501 (28:827).

Messrs. **Joseph H. Choate**, *Henry Edwin Tremain* and *Mason W. Tyler*, for defendants in error:

Language will be presumed to have the same meaning in commerce that it has in ordinary use, unless the contrary is shown.

Swan v. *Arthur*, 103 U. S. 597 (26:525); *Greenleaf* v. *Goodrich*, 101 U. S. 284 (25:847); *Maillard* v. *Lawrence*, 57 U. S. 16 How. 251 (14:925); *Schmieder* v. *Barney*, 113 U. S. 645 (28:1130); *Arthur* v. *Morrison*, 96 U. S. 108 (24:764); *Marvel* v. *Merritt*, 116 U. S. 11 (29: 550); *Lawrence* v. *Merritt*, 127 U. S. 113 (*ante*, 91).

Duties are not to be assessed on doubtful interpretations.

Hartranft v. *Wiegmann*, 121 U. S. 609 (30: 1012).

The articles were enumerated, and the provisions as to nonenumerated articles do not apply.

Hartranft v. *Langfeld*, 125 U. S. 128 (31:672).

No technicalities in protests.

Frazee v. *Moffitt*, 20 Blatchf. 267; *Herrman* v. *Miller*, 127 U. S. 363 (*ante*, 186); *Arthur* v. *Dodge*, 101 U. S. 34 (25:948); *Arthur* v. *Morgan*, 112 U. S. 499 (28:827); *Steegman* v. *Maxwell*, 3 Blatchf. 365; *Vaccari* v. *Maxwell*, 3 Blatchf. 373; *Chung Yung* v. *Kelly*, 14 Fed. Rep. 639; *Maillard* v. *Lawrence*, 3 Blatchf. 381.

Mr. Justice **Bradley** delivered the opinion [413] of the court:

This is an action brought by the defendants in error against the Collector of New York, to recover an alleged excess of duties on goods imported. The goods referred to were white beans, upon which the collector levied a duty of twenty per cent *ad valorem*, as garden seeds. This charge was paid under protest, the plaintiffs insisting that the article was exempt from

duty under the free list, as seeds "not otherwise provided for," or, if not free, they were only dutiable at ten per cent, as "*vegetables*." The Treasury Department finally conceded that the beans did not properly come under the denomination of "garden seeds," and directed ten per cent to be refunded, but still insisted that they are liable to a duty of ten per cent, as "vegetables," in the general category of "articles of food." The plaintiffs adhere to their first position that beans are free of duty, as seeds "not otherwise provided for;" and that is the only question here presented.

The clauses of the law which are to be construed in determining the controversy are to be found in the last Customs Duties Act, passed March 3, 1883, as a substitute for Title XXXIII of the Revised Statutes. Among the various schedules attached to this Act, classifying the articles subject to, or free from, import duties, is one entitled "Provisions," in which are enumerated, amongst other things, beef and pork, cheese, butter, lard, wheat, rye, barley, indian corn, oats, meal, flour, potato or corn starch, rice, hay, different kinds of fish, pickles, potatoes, *vegetables* in their natural state, or in salt or brine, not specifically enumerated or provided for in this Act, vegetables prepared or preserved, currants, dates, fruits of various kinds, almonds, walnuts, peanuts, etc. Beans are not mentioned specifically in this list. If they are [414] properly classed under the term "vegetables in their natural state," they are subject to a duty of ten per cent, as contended for by the Government.

Under the head of "Free List—Sundries," we find amongst a great number of other miscellaneous articles, the following: "Plants, trees, shrubs, and vines of all kinds not otherwise provided for, and *seeds of all kinds*, except medicinal seeds, not specially enumerated or provided for in this Act." If the white beans imported by the plaintiffs are properly to be classified as "seeds," then they are free from all duty, as claimed by the plaintiffs.

Schedule N, entitled "Sundries," contains a list of miscellanous articles (many of them articles of manufacture), subject to various rates of duty. The following is one of the items of this schedule: "Garden seeds, except seed of the sugar beet, 20 per cent *ad valorem*." If white beans are to be classed as "garden seeds" then the original decision of the collector was right. This decision, however, has been abandoned, and we think very properly. Although beans are often planted in gardens as seed, yet, as a product, and a commodity in the market, they are not generally denominated as "garden seeds," any more than potatoes, which are also sometimes planted as seed in gardens. The same consideration also applies in regard to the use of the more general term "seeds. We do not see why they should be classified as seeds any more than walnuts should be so classified. Both are seeds in the language of botany or natural history, but not in commerce nor in common parlance.

On the other hand, in speaking generally of provisions, beans may well be included under the term "vegetables." As an article of food on our tables, whether baked or boiled, or forming the basis of soup, they are used as a vegetable, as well when ripe as when green. This is the principal use to which they are put. Beyond the common knowledge which we have on this subject, very little evidence is necessary, or can be produced. But on the trial, the parties deemed it important to introduce a great deal of testimony. The court, however, did not allow the defendant to prove the common designation of beans [415] as an article of food. It was shown by the evidence that beans are generally sold and dealt in, under the simple designation of "beans;" but that does not solve the question as between the rival designations of "seeds" and "vegetables." The common designation as used in every-day life, when beans are used as food (which is the great purpose of their production), would have been very proper to be shown in the absence of further light from commercial usage. We think that the evidence on this point ought to have been admitted. In addition to this, the court told the jury that "The commercial designation of the article, or what the article is called in trade and commerce, or the name bean, has nothing to do with the question." We think the court erred in this instruction. The commercial designation, as we have frequently decided, is the first and most important designation to be ascertained in settling the meaning and application of the tariff laws. See *Arthur* v. *Lahey*, 96 U. S. 112, 118 [24:766, 768]; *Barber* v. *Schell*, 107 U. S. 617, 623 [27:490, 492]; *Worthington* v. *Abbott*, 124 U. S. 434, 436 [31:494, 495]; *Arthur's Executors* v. *Butterfield*, 125 U. S. 70, 75 [31:643, 645]. But if the commercial designation fails to give an article its proper place in the classifications of the law, then resort must necessarily be had to the common designation. We think, therefore, that the court erred both in its charge and in the exclusion of the evidence offered; especially as, without any evidence, and with the common knowledge which we all possess, the court might almost have been justified in directing a verdict for the defendant.

We have not adverted to a clause of the Customs Act in which beans are specifically named, because we do not think it applies to the case. We refer to that clause of the free list which enumerates "drugs, barks, *beans*, berries, etc., any of the foregoing of which are not edible and are in a crude state." As this clause refers to articles "not edible," it cannot include beans of the character now under consideration.

Nor have we thought it necessary to refer particularly to the case of *Ferry* v. *Livingston*, 115 U. S. 542 [29:489], in which the clauses of the law respecting "garden seeds" in Schedule N, and "seeds of all kinds" in the free list are elaborately discussed and commented on. [416] There the question was between "garden seeds" and "field seeds," and the decision depended on the particular circumstances of the case. The opinion concludes with this declaration: "As this case rests for decision on the facts found, it is not possible for this court to lay down any general rules which will apply to cases differing in their facts from this case." We regard our present decision as in harmony with the decision in that case; and only refer to it for the purpose of disclaiming any intention to dissent from it.

The judgment of the Circuit Court is reversed, and the cause remanded with instructions to order a new trial.

[439]

ADAM BADEAU, *Appt.*,
v.
UNITED STATES.

UNITED STATES, *Appt.*
v.
ADAM BADEAU.

(See S. C. Reporter's ed. 439-452.)

Compensation for two offices—retired army officer not entitled to pay, while consul—money paid when not recoverable.

1. A person holding two offices or employments under the government, when the services rendered or which might be required under them, were not incompatible, is not precluded from receiving the salary or compensation of both.

2. Under the Act of 1875, retired officers of the army, situated as therein described, are not held, if they accept or hold diplomatic or consular appointment, to have resigned their places in the army; but they are not entitled to pay as army officers when they are absent from their country in the discharge of continuous official duties inconsistent with military service. Such officers, when in the diplomatic or consular service, cannot receive double compensation.

3. Where an officer of the army was paid, as such, for time during the intervals of his employment in a diplomatic or consular capacity, being an officer *de facto* if not *de jure*, the moneys so paid to him cannot be recovered back by the United States.

[Nos. 659, 749.]

Submitted Jan. 4, 1889. Decided April 15, 1889.

CROSS Appeals from judgment of the Court of Claims, dismissing the petition of the claimant and the counterclaim of the United States; the claim being for pay and allowances of a captain retired from active service while being Consul-General at London and also at Havana; and the counterclaim being for moneys paid him for salary as an army officer during the same time. *Affirmed.*

Reported below, 21 Ct. Cl. 48.

[440]

Statement by *Mr. Chief Justice* **Fuller:**

On the 21st day of June, 1883 the Secretary of the Treasury, pursuant to section 1063 of the Revised Statutes, and in compliance with the certificate of the Second Comptroller of the Treasury, transmitted to the Court of Claims the claim of Adam Badeau for pay as an officer of the United States Army, "together with all the vouchers, papers, documents, and proofs pertaining thereto, that the same might be proceeded in, in said court, as if originally commenced therein by the voluntary action of the claimant;" and thereafter upon the 19th day of February, 1884, the claimant filed his petition in which, after making certain averments, and stating that he was secretary of legation at London from May 19 to December 6, 1869, and Consul-General at London April 28, 1870, to September 16, 1881, and at Havana, Cuba, from November 25, 1882, to the date of the filing of the petition, and that he had received pay as a military officer from December 6, 1869, to April 30, 1870, and from September 16, 1881, to November 25, 1882, he claimed to be entitled to "the amount of pay and allowances of a captain, mounted, retired from active service, for the period from April 28, 1870, to September 16, 1881, and from November 25, 1882, up to the present time, amounting to the sum of eighteen thousand eight hundred and fifty-two dollars and sixty-five cents, not having received such pay or allowances during said period; also, to the additional pay and allowance provided by section 1262 of the Revised Statutes, which section is as follows:

"There shall be allowed and paid to each commissioned officer below the rank of brigadier-general, including chaplains and others having assimilated rank or pay, ten per centum of their current yearly pay for each term of five years of service."

A general traverse was filed by the United States, March 8, 1884, and on the 10th of February, 1885, a counterclaim, stating "that Adam Badeau, the claimant in the above entitled cause, before and at the time of the commencement of this suit was, and still is, indebted to the said defendants in a large sum of money, to wit, two thousand five hundred and sixty dollars and ten cents ($2,560.10), for money erroneously paid to said Badeau without authority of law, the same being on account of payments of salary made to him as an army officer (captain, retired), from December 31, 1869, to October 31, 1882, during all of which time said Badeau was not in fact in the army nor an officer thereof;" to which the claimant filed a replication March 9, 1885. [441]

The United States also pleaded the Statute of Limitations to the larger part of petitioner's claim.

Findings of fact and conclusions of law were announced by the Court of Claims, May 9, 1887, as follows:

I. On the 21st April, 1869, the claimant, then being a first lieutenant of infantry in the Army of the United States, unassigned, was appointed by the President assistant secretary of legation at London. On the 19th May, 1869, he accepted the appointment, filed in the Department of State his oath of office, and embarked for his post, reaching England May 31st, 1869.

II. On the 15th May, 1869, a military board was convened by the following order:

[Special Orders, No. 116.—Extract.]

HEADQUARTERS OF THE ARMY,
ADJUTANT-GEN'L'S OFFICE,
Washington, May 15, 1869.

12. By direction of the President, a board of officers will assemble in New York City at 12 M. on the 18th inst., or as soon thereafter as practicable, for the examination of Bvt. Brig. General Adam Badeau, 1st lieutenant U. S. Army, for retirement, in pursuance of the Act of Congress of the 3d of August, 1861. . . .

Upon completion of the examination of General Badeau the president of the board will dissolve the board and order the officers composing the same to resume their proper duties.

* * * * * *

By command of Gen'l Sherman.

E. D. TOWNSEND,
Adjutant-General.

The board met in New York on the 18th May, 1869, and the following proceedings took place: [442]

NEW YORK, *May 18th*, 12 M.

The board met pursuant to above order. Owing to the illness and consequent absence of Gen'l Reeve the board adjourned.

NEW YORK, *May 18th*, 4 p. m.

The following telegram was received:

WASHINGTON, D. C., *May 18th*.

General McDOWELL, *New York City:*

By direction of the Secretary of War, General Rufus Ingalls is detailed as a member of the retiring board, vice Reeve.

Acknowledge receipt.

E. D. TOWNSEND,
Adjutant-General.

On receipt of the above telegraphic order the board reconvened.

Present all the members and the recorder.

The board proceeded to consider the case of 1st Lieut. Adam Badeau, bvt. brig. gen'l U. S. A., who appeared before the board, and having heard the orders convening it read, was asked if he objected to any member named in the orders. He having no objection, the board was duly sworn in his presence by the recorder, and the recorder by the president. . . . The board was cleared, and after mature deliberation find "that 1st Lieutenant Adam Badeau, U. S. Infantry, bvt. brig. general U. S. A., is incapacitated for active service, and that said incapacity is due to a wound received in the foot whilst on duty as captain and additional aide-de-camp to Brig. Gen'l T. W. Sherman in the assault on Port Hudson in May, 1863."

IRWIN McDOWELL,
Bvt. Maj. Gen'l, Pres'd't Board.
H. STOCKTON,
1st Lieut. Ord., Bvt. Capt., A. D. C., Recorder of Board.

[443] On the 22d May, 1869, this was approved by the Secretary of War, and on the 25th May the President made the following order:

[Special Orders, No. 126—Extract.]

HEADQUARTERS OF THE ARMY,
ADJUTANT-GENERAL'S OFFICE,
Washington, May 25, 1869.

* * * * * *

12. Brevet Brigadier-General Adam Badeau, 1st lieutenant U. S. Army, having, at his own request, been ordered before a board of examination, and having been found "incapacitated for active service, and that said incapacity is due to a wound received in the foot whilst on duty as captain and additional aide-de-camp to Brigadier-General T. W. Sherman in the assault on Port Hudson in May, 1863," the President directs that his name be placed upon the list of retired officers of that class in which the disability results from long and faithful service, or from some injury incident thereto, in accordance with sections 16 and 17 of the Act approved August 3, 1861. In accordance with section 32 of the Act approved July 28, 1866, General Badeau is, by direction of the President, retired with the full rank of captain, to date from May 18, 1869.

* * * * * *

By command of General Sherman.

E. D. TOWNSEND,
Adjutant-General.

III. The claimant held the office of assistant secretary of legation, and received the salary thereof, until the 6th December, 1869, when he resigned. By order of the President, December 23, 1869, he was "assigned to duty in the City of Washington" as an officer of the army, it being stated that the order was to date from December 6, 1869. He drew from the pay department of the army the pay of an active captain for the period from December 6, 1869, to February 21, 1870, and the pay of a retired captain from February 21, 1870, to April 30, 1870, the pay so drawn amounting to $621.84. He was appointed consul-general at London, England, April 28, 1870, and was in the con- [444] sular service of the Government until the commencement of this suit, except for a period of about fourteen months, beginning in September, 1881, and ending in November, 1882.

IV. From May, 1869, until May, 1878, the claimant was borne upon the retired list of the army as having been retired with the rank of captain on the 18th May, 1869. On the 7th May, 1878, the following order was issued:

[General Orders No. 20.]

HEADQUARTERS OF THE ARMY,
ADJUTANT-GENERAL'S OFFICE.
Washington, May 7, 1878.

The following are announced:

Dropped.

* * * * *

In conformity with section 1223 Revised Statutes and opinion of Attorney-General dated December 11, 1877. (1) Captain Adam Badeau, U. S. Army, retired, to date from May 19, 1869.

* * * * *

By command of General Sherman.

E. D. TOWNSEND,
Adjutant-General.

The claimant thereupon applied to have the above order revoked, upon the ground that he was disabled within the intent of the Act 3d March, 1875; and he produced and filed the following certificate:

BANGOR, MAINE, *Feb. 20, 1878.*

I, Eugene F. Sanger, physician and surgeon, certify that I was medical director of the 2d division, 19th Army Corps, before Port Hudson, May 27, 1863, and that Captain Adam Badeau, A. D. C. on Brig.-Gen'l T. W. Sherman's staff, received a bullet wound penetrating the instep of the left foot, and making its exit below the internal malleolus. I resected the 2d cuniform [445] bone, parts of the 1st and 3d cuniform, and the proximal end of the 2d metatarsal bone, on acc't of which resection he was sent to the rear at New Orleans.

Respectfully, Your Ob't Servant,
EUGENE F. SANGER,
Brevet Lt. Col. and late Brigade Surgeon, late Medical Director, 19th Army Corps, now Examining Surgeon Pension Bureau.

The foregoing surgeon's certificate was duly referred to the Surgeon-General of the army. The order of reference and the Surgeon-General's report thereon were as follows:

WAR DEPARTMENT,
ADJUTANT-GENERAL'S OFFICE.
Washington, March 4, 1878.

Respectfully referred to the Surgeon-General, U. S. Army, for his opinion as to whether the disability of Captain Badeau, for which he was retired, can be regarded as bringing him within that class of officers specified in the proviso of section 2, Act of March 3, 1875 (G. O.

16 of 1875), who have "an arm or leg permanently disabled by reason of resection on account of wounds."

The proceedings of the Retiring Board in Captain Badeau's case and other papers are inclosed herewith.

By order of the Secretary of War.

E. D. TOWNSEND,
Adjutant-General.

SURGEON-GENERAL'S OFFICE.
March 6, 1878.

Respectfully returned to the Adjutant-General of the army with opinion that the evidence submitted is sufficient to establish that Captain Badeau's case comes properly within that class of officers specified by section 2, Act of March 3, 1875, as one in which an arm or leg is permanently disabled by reason of resection on account of wounds.

J. W. BARNES,
Surgeon-General.

[446] Whereupon the Secretary of War, on the 3d of July, 1878, made the following order, under which the claimant was borne on the retired list of the army up to the time of his bringing this action:

WAR DEPARTMENT, *July* 3, 1878.

Respectfully returned to the Adjutant-General of the Army.

The former decision in Capt. Badeau's case was correct, as the record then stood, but it now appearing that his case comes clearly within the provisions of the proviso to section 2, Act of March 3, 1875, his name will be restored to the retired list.

GEORGE W. MCCRARY,
Secretary of War.

V. From the 18th May, 1869, to the 6th December, 1869, the claimant received no pay as a military officer, nor has he received military pay at any time while holding a diplomatic or consular office.

From the 6th December, 1869, to the 21st February, 1870, while assigned to duty in the City of Washington as a retired officer under the Act 21st January, 1870 (16 Stat. at L. p. 22), the claimant was paid as a captain in active service the sum of $396.92, during which period he was rendering service as an officer.

From the 21st February, 1870, to the 31st October, 1882, the claimant was paid as an officer on the retired list for periods when he was not holding a diplomatic or consular office, the sum of $2,163.18.

There has been withheld from the claimant while not holding a diplomatic or consular office his pay as a retired officer from November 1, 1882, to November 25, 1882, amounting to $——.

There has been withheld from the claimant while holding a diplomatic or consular office between the 19th May, 1869, and the 19th February, 1884, when this action was brought, his pay as a retired officer, amounting to the sum of $——.

VI. The claimant was beyond the seas at the time when the foregoing claims accrued, and his petition was filed in this court within three years after the disability had ceased.

[447] CONCLUSIONS OF LAW.

The court being equally divided upon the foregoing findings as to the claimant's right to recover, does, for the purposes of an appeal, frame the following conclusions of law:

The petition of the claimant and the counterclaim of the defendants should both be dismissed.

Thereupon judgment was entered dismissing the petition of the claimant and the counterclaim of the United States. Appeals were prosecuted by both parties to this court, and the records filed herein August 10, and October 5, 1887.

On the 5th of October, 1888, a stipulation was filed, adding to the record certain conclusions and order of the Court of Claims and certain matters introduced in evidence, at a stage of the case prior to the final findings.

Mr. **Daniel P. Hays**, for Badeau:

The intention of the statute shall prevail, even as against its letter.

Bacon, Abr. tit. *Statute* 1; Potter's Dwar. Stat. 175, 178; *Smythe* v. *Fiske*, 90 U. S. 23 Wall. 380 (23:49); *U. S.* v. *Freeman*, 44 U. S. 3 How. 556 (11:724); *Brewer* v. *Blougher*, 39 U. S. 14 Pet. 178 (10:408).

In the construction of a doubtful or ambiguous law, the practical construction given to it by those charged with executing it, is most forcible and in many cases conclusive.

Brown v. *U. S.* 113 U. S. 568 (28:1079); *Edwards* v. *Darby*, 25 U. S. 12 Wheat. 206 (6:603); *U. S.* v. *Pugh*, 99 U. S. 265 (25:322); *U. S.* v. *Moore*, 95 U. S. 760 (24:588); *U. S.* v. *Alexander*, 79 U. S. 12 Wall. 180 (20:382); *Hahn* v. *U. S.* 107 U. S. 402 (27:527); *U. S.* v. *Graham*, 110 U. S. 219 (28:126); *Stuart* v. *Laird*, 5 U. S. 1 Cranch, 299 (2:115); *U. S.* v. *State Bank of N. C.* 31 U. S. 6 Pet. 29 (8:308); *Union Ins. Co.* v. *Hoge*, 62 U. S. 21 How. 66 (16:68); *Robertson* v. *Downing*, 127 U. S. 607 (*ante*, 269).

A resignation does not become operative until the officer is officially notified of its acceptance.

Smith v. *U. S.* 2 Ct. Cl. 207; *Barger* v. *U. S.* 6 Ct. Cl. 37; *Mimmack* v. *U. S.* 97 U. S. 426 (24:1067).

This statute is a remedial one and should be liberally construed.

Potter's Dwar. Stat. 281; *Bechtel* v. *U. S.* 101 U. S. 597 (25:1019); *Whitney* v. *Emmett*, 1 Baldw. 303; *Whittemore* v. *Cutter*, 1 Gall. 429; *U. S.* v. *Burchard*, 125 U. S. 179 (31:668).

An estoppel can be urged against the Government.

U. S. v. *Collier*, 3 Blatchf. 325.

Messrs. **A. H. Garland**, *Atty-Gen.*, **R. A. Howard**, *Asst. Atty-Gen.*, and *F. P. Dewees*, for the United States:

If Badeau was out of the army by his own voluntary act, he could not re-enter the army except in the manner prescribed by section 2 of article 2 of the Constitution.

Opinion Atty-Gen. Evarts, 12 Ops. Atty-Gen. 555; *Mimmack* v. *U. S.* 97 U. S. 426 (24:1067); *DuBarry's Case*, 4 Ops. Atty-Gen. 603; *Bennett* v. *U. S.* 19 Ct. Cl. 379; *McElrath* v. *U. S.* 12 Ct. Cl. 201, 312; 102 U. S. 426 (26:189); *Miller* v. *U. S.* 19 Ct. Cl. 338; *Badeau's Case*, 15 Ops. Atty-Gen. 407; *Blake* v. *U. S.* 14 Ct. Cl. 462; 103 U. S. 227 (26:462); *Montgomery* v. *U. S.* 19 Ct. Cl. 370; *Palen* v. *U. S.* 19 Ct. Cl. 389; *Mo-*

Blair v. *U. S.* 19 Ct. Cl. 528; *Vanderslice* v. *U. S.* 19 Ct. Cl. 480.

Claimant must refund the money which he wrongfully drew from the Treasury for services not performed.

U. S. v. *Burchard*, 125 U. S. 176 (31:662); *Runkle* v. *U. S.* 19 Ct. Cl. 396.

Mr. Chief Justice **Fuller** delivered the opinion of the court:

Section 2 of the Act of March 30, 1868, entitled "An Act Making Appropriations for the Consular and Diplomatic Expenses of the Government for the Year Ending Thirtieth June, 1869, and for Other Purposes" (15 Stat. at L. 56, 58), is as follows: "That any officer of the army or navy of the United States who shall, after the passage of this Act, accept or hold any appointment in the diplomatic or consular service of the government, shall be considered as having resigned his said office, and the place held by him in the military or naval service shall be deemed and taken to be vacant, and shall be filled in the same manner as if the said officer had resigned the same." This was carried into the Revised Statutes (1874) as section 1223.

By section 18, chap. 42, Act of August 3, 1861 (12 Stat. at L. 290), it was provided "that the officers partially retired shall be entitled to wear the uniform of their respective grades, [448] shall continue to be borne upon the army register, or navy register, as the case may be, and shall be subject to the rules and articles of war, and to trial by general court-martial for any breach of the said articles." And this was re-enacted as section 1256 of the Revised Statutes.

By section 16 of the said Act of August 3, 1861, it was provided "that there shall not be on the retired list at any one time more than seven per centum of the whole number of the officers of the army as fixed by law;" while by section 5 of the Act of July 15, 1870 (16 Stat. at L. 317), "The number of officers who may be retired in accordance with existing laws shall be in the discretion of the President: *Provided*, That the whole number on the retired list shall at no time exceed three hundred;" and this reappears as section 1258 of the Revised Statutes.

By section 28 of the Act of July 15, 1870 (16 Stat. at L. 320), "Any retired officer may, on his own application, be detailed to serve as professor in any college," and such is section 1260 of the Revised Statutes.

By the first section of "An Act Relating to Retired Officers of the Army," approved January 21, 1870 (16 Stat. at L. 62), it was provided "that no retired officer of the army shall hereafter be assigned to duty of any kind, or be entitled to receive more than the pay and allowances provided by law for retired officers of his grade; and all such assignments heretofore made shall terminate within thirty days from the passage of this Act;" but by Resolution of April 6, 1870 (16 Stat. at L. 372), the law of January 21st was limited so as not to apply "to officers selected by the Board of Commissioners of the Soldiers' Home, District of Columbia, for duty at that institution, such selection being approved by the Secretary of War," and this is re-enacted in section 1259 of the Revised Statutes.

By section 18 of the Act of July 15, 1870, already referred to (16 Stat. at L. 319), it was enacted "That it should not be lawful for any officer of the army of the United States on the active list to hold any civil office, whether by election or appointment, and any such officer accepting or exercising the functions of a civil office shall at once cease to be an officer of the army, and his commission shall be vacated thereby," and this is carried into the Revised Statutes as section 1222.

Thus in the Acts of 1868 and 1870, and in [449] sections 1222 and 1223 of the Revised Statutes, Congress distinguished, and adhered to the distinction, between officers on both lists and officers on the active list only, and between ordinary civil appointments and appointments in the diplomatic or consular service. No officer, whether on the active or retired list, could accept appointment in the latter, and remain an officer; but that rule was not applied to retired officers in the matter of holding a civil office.

The second section of the Act of Congress of March 3, 1875, reads as follows:

"That all officers of the army who have been heretofore retired by reason of disability arising from wounds received in action shall be considered as retired upon the actual rank held by them, whether in the regular or volunteer service, at the time when such wound was received, and shall be borne on the retired list and receive pay hereafter accordingly; and this section shall be taken and construed to include those now borne on the retired list, placed upon it on account of wounds received in action: *Provided*, That no part of the foregoing Act shall apply to those officers who had been in service as commissioned officers twenty-five years at the date of their retirement; nor to those retired officers who had lost an arm or leg, or has an arm or leg permanently disabled by reason of resection, on account of wounds, or both eyes by reason of wounds received in battle; and every such officer now borne on the retired list shall be continued thereon, notwithstanding the provisions of section two, chapter thirty-eight, Act of March thirty, eighteen hundred and sixty-eight: *And be it also provided*, That no retired officer shall be affected by this Act who has been retired or may hereafter be retired on the rank held by him at the time of his retirement; and that all Acts or parts of Acts inconsistent herewith be, and are hereby, repealed." (18 Stat. at L. 512).

By section 32 of the Act of July 28, 1866 (14 Stat. at L. 337), it was provided "that officers of the regular army entitled to be retired on account of disability occasioned by wounds received in battle, may be retired upon the full rank of the command held by them, whether in the regu- [450] lar or volunteer service, at the time such wounds were received."

It was within the power of Congress to change the rank here spoken of, and this it did by the Act of 1875, which substitutes for "the full rank of the command held by them" the "actual rank held by them," and which embraces only "those now borne on the retired list, placed upon it on account of wounds received in action." *Wood* v. *United States*, 107 U. S. 414, 417 [27; 542, 543]. Under this Act officers of twenty-five years' service at the date of

their retirement, and officers who had lost an arm or leg or had an arm or leg permanently disabled, or both eyes, were not subject to be considered as retired upon the actual rank held by them when wounded, as provided in the first part of the section; and no retired officer was affected by the Act who had been or might be retired on the rank actually held by him at the time of such retirement; and all officers mentioned in the first part of the section, or of twenty-five years' service, or who had lost an arm or leg, etc., could accept appointment in the diplomatic or consular service, notwithstanding section 2 of the Act of March 30, 1868, or section 1223 of the Revised Statutes, as we think the words "every such officer now borne on the retired list shall be continued thereon" refer to all officers previously mentioned in the section; and the provision in this respect shows that up to March 3, 1875, section 2 of the Act of 1868 applied to officers on the retired list as well as those in active service.

Sections 1763, 1764, and 1765 of the Revised Statutes are as follows:

"Sec. 1763. No person who holds an office, the salary or annual compensation attached to which amounts to the sum of two thousand five hundred dollars, shall receive compensation for discharging the duties of any other office, unless expressly authorized by law.

"Sec. 1764. No allowance or compensation shall be made to any officer or clerk, by reason of the discharge of duties which belong to any other officer or clerk in the same or any other department; and no allowance or compensation shall be made for any extra services whatever, [451] which any officer or clerk may be required to perform, unless expressly authorized by law.

"Sec. 1765. No officer in any branch of the public service, or any other person whose salary, pay, or emoluments are fixed by law or regulations, shall receive any additional pay, extra allowance, or compensation, in any form whatever, for the disbursement of public money, or for any other service or duty whatever, unless the same is authorized by law, and the appropriation therefor explicitly states that it is for such additional pay, extra allowance, or compensation."

Whether by the order of the Secretary of War, July 8, 1878, the claimant's name was properly restored to the retired list we are not called upon to determine in this case, because even were that so we do not think his petition can be sustained.

General Badeau received as Consul-General at London an annual salary of seventy-five hundred dollars, and at Havana, of six thousand dollars, as fixed by law, and was expressly inhibited from receiving any additional salary, allowance, pay, or compensation for discharging the duties of any other office unless expressly authorized by law, of which there is no pretense in this case. It has been decided that a person holding two offices or employments under the government, when the services rendered or which might be required under them were not incompatible, is not precluded from receiving the salary or compensation of both. *Converse* v. *United States*, 62 U. S. 21 How. 463 [16: 192]; *United States* v. *Brindle*, 110 U. S. 688 [28: 286]. But the Treasury Department did not apparently regard this case as falling within that exception, and we agree with that conclusion. *United States* v. *Shoemaker*, 74 U. S. 7 Wall. 338 [19: 80]; *Stansbury* v. *United States*, 75 U. S. 8 Wall. 33 [19: 315]; *Hoyt* v. *United States*, 51 U. S. 10 How. 109, 141 [13: 348, 361].

Under the Act of 1875 retired officers situated as therein described, are so far taken out of the operation of the Act of 1868 as not to be held, if they accept or hold diplomatic or consular appointment, to have resigned their places in the army; but this does not change the general policy of the law, and does not entitle them to pay as army officers during the period of time when they are absent from their country in the discharge of continuous official duties inconsistent with subjection to the rules and [452] articles of war, and the other incidents of military service. Notwithstanding section 1223, such officers, when in the diplomatic or consular service, may still be borne on the retired list, but cannot receive double compensation.

Nor can we disturb the judgment adverse to the counterclaim. As between individuals, where money has been paid under a mistake of law, it cannot be recovered back; but it is denied that this rule is applicable to the United States, upon the ground that the government is not bound by the mistakes of its officers, whether of law or of fact. *United States* v. *Kirkpatrick*, 22 U. S. 9 Wheat. 720 [6: 199]; *United States* v. *Bank of Metropolis*, 40 U. S. 15 Pet. 377 [10: 774]; *McElrath* v. *United States*, 102 U. S. 426 [26: 189]. But inasmuch as the claimant, if not an officer *de jure*, acted as an officer *de facto*, we are not inclined to hold that he has received money which, *ex æquo et bono*, he ought to return.

He was paid as a military officer from December 6, 1869, to the 21st of February, 1870, and for the time from February 21, 1870, to April 30, 1870, and for about fourteen months beginning in September, 1881, and ending in November, 1882. After May 19, 1869, he was employed in a diplomatic or consular capacity except during the above specified periods; and the implication from the findings is that he was paid for those periods, because he was actually rendering service, whether subject to assignment thereto or not.

The judgment of the Court of Claims is affirmed.

Mr. Justice **Miller** dissented.

WILLIAM S. HASSALL, Trustee, *Appt.*, [493]
v.
A. W. WILCOX.

(See S. C. Reporter's ed. 493–505.)

Judgment only binds the parties—proceeding in rem—*lien for labor.*

1. A judgment in a suit in a state court establishing a lien on a railroad for labor does not bind the trustee under the mortgage or the bondholders of the road who are not made parties to it.

2. It is essential to a proceeding *in rem* that there should, at least, be constructive notice to adverse claimants, to appear and maintain their rights, before a judgment in such a proceeding can operate as *prima facie* evidence.

3. Where the circuit court awarded a lien, with a priority, for the full amount claimed, and the evidence sustained the lien for only a part of such amount, and the master's report did not state the amount for which a lien was proper, the case was remanded for further proofs.

[No. 68.]

Argued April 2 and 3, 1889. Decided April 22, 1889.

APPEAL from a decree of the Circuit Court of the United States for the Western District of Texas, to review a decree confirming a sale and allowing a claim as a lien prior to the lien of the mortgage. *Reversed.*

The facts are stated in the opinion.

Mr. **Silas W. Pettit,** for appellant:

The trustees under the mortgage, not being parties to the proceedings, are not bound by the judgment.

Brooks v. *Burlington & S. W. R. Co.* 101 U. S. 443–445 (25: 1057, 1058).

A claim to a lien for labor performed by claimant's teams and servants is not within the protection of the Act of 1879.

Texas & St. L. R. Co. v. *Allen*, 1 Tex. App. Civ. Cas. § 572; 2 Sayles, Tex. Civ. Stat. 3179, a, note (1).

Mr. **W. Hallett Phillips,** for appellee:

Appellee's claim falls within those which have met with the confirmation of this court.

Fosdick v. *Schall*, 99 U. S. 235 (25: 339); *Jeffrey* v. *Moran*, 101 U. S. 285 (25: 785); *Union Trust Co.* v. *Souther*, 107 U. S. 591 (27: 488); *Union Trust Co.* v. *Walker*, 107 U. S. 596 (27: 490); *Burnham* v. *Bowen*, 111 U. S. 777 (28: 596); *Union Trust Co.* v. *Morrison*, 125 U. S. 607 (31: 830).

[494] *Mr. Justice* **Blatchford** delivered the opinion of the court:

On the 18th of February, 1879, an Act was passed by the State of Texas (General Laws of 1879, chap. 12), entitled "An Act to Protect Mechanics, Laborers and Operatives on Railroads Against the Failure of Owners, Contractors and Subcontractors or Agents to Pay Their Wages When Due, and Provide a Lien for Such Wages," which provided as follows:

"SECTION 1. *Be it enacted by the Legislature of the State of Texas,* That all mechanics, laborers, and operatives who may have performed labor in the construction or repair of any railroad, locomotive, car, or other equipment to a railroad, or who may have performed labor in [495] the operating of a railroad, and to whom wages are due or owing, shall hereafter have a lien prior to all others upon such railroad and its equipment for such wages as are unpaid.

"SEC. 2. In all suits for wages due by a railroad company for such labor as heretofore mentioned, upon proof being satisfactorily made that such labor had been performed, either at the instance of said company, a contractor, or subcontractor, or agent of said company, and that such wages are due, and the lien given by this Act is sought to be enforced, it shall be the duty of the court having jurisdiction to try the same to render judgment for the amount of wages found to be due, and to adjudge and order said railroad and equipments, or so much thereof as may be necessary, to be sold to satisfy said judgment. In all suits of this kind it shall not be necessary for the plaintiff to make other lien-holders defendants thereto, but such lien-holders may intervene and become parties thereto and have their respective rights adjusted and determined by the court.

SEC. 3. Suits by mechanics, laborers, and operatives, for their wages due by railroad companies, may be instituted and prosecuted in any county in this State where such labor was performed, or in which the cause of action or part thereof accrued, or in the county in which the principal office of such railroad company is situated; and in all such suits service of process may be made in the manner now required by law.

SEC. 4. The lien created by this Act shall cease to be operative in twelve months after the creation of the lien, if no step be sooner taken to enforce it."

On the 15th of May, 1882, the Rio Grande and Pecos Railway Company, a Texas corporation, made a mortgage to the Mercantile Trust Company of the State of New York, a New York corporation, covering all the property, real and personal, of the Texas corporation, including its franchises, lands, railways, and other property, to secure $600,000 of coupon bonds issued by it, dated June 1, 1882, payable in thirty years and bearing semi-annual interest at the rate of 6 per cent per annum.

On or prior to the 27th of March, 1884, A. W. Wilcox presented a petition to the District [496] Court of the County of Webb, in the State of Texas, subscribed and sworn to by him before the clerk of that court, in the words following:

"THE STATE OF TEXAS, *County of Webb.*

"To the Hon. the District Court of Webb County:

"The petition of A. W. Wilcox, who resides in the County of Webb, and State of Texas, complaining of the Rio Grande and Pecos R. R. Co., a corporation duly incorporated under the laws of the State of Texas, and operating its lines through the County of Webb, where it has its principal offices, represents that heretofore, to wit, on the 12th day of January, 1884, the said defendant, in consideration of the payment of claims for labor on said defendant's R. R., executed and delivered to your petitioner a certain promissory note (see note) for the sum of fifty-five hundred and twenty-six $\frac{78}{100}$ dollars, with interest, 10 per cent, whereby defendant promised and became liable to pay your petitioner the said note, with interest, according to the tenor thereof. Your petitioner represents that he is the owner and holder of said note, and that defendant has failed and refused to pay the said note, though thereto requested, to petitioner's damage. Wherefore he prays for judgment for his debt and interest, and damages, and foreclosure of his lien on defendant's railroad and equipments."

The promissory note referred to in said petition was as follows:

"LAREDO, TEXAS, *January 12th*, 1884.

"The Rio Grande and Pecos Railway Company, for value received, hereby promises to pay A. W. Wilcox, or bearer, on demand, the sum of fifty-five hundred and twenty-six $\frac{78}{100}$ dollars for services, and for amounts advanced on claims for labor performed in the construc-

tion and maintenance of the Rio Grande and Pecos Railroad, with interest at ten per cent per annum until paid, and upon default in payment A. S. McLane is hereby authorized, in the name of the said Rio Grande and Pecos Railroad Company, to confess judgment in any court of competent jurisdiction, hereby waiving citation and service thereof.

[497]

"THE RIO GRANDE AND PECOS RAILWAY COMPANY,
By A. C. HUNT, *The President.*

"[Corporate Seal of The Rio Grande and Pecos Railway Company.]"

On the 27th of March, 1884, the District Court rendered the following judgment:

"A. W. WILCOX
vs. } 435.
"THE RIO GRANDE & PECOS R'Y CO.

"This day came plaintiff, and the defendant, by attorney-in-fact, A. S. McLane, comes and says that he cannot deny the action of the said A. W. Wilcox, and that he is justly indebted to plaintiff in the sum of fifty-five hundred and twenty-six and $\frac{73}{100}$ dollars, with ten per cent interest thereon from the 12th day of January, 1884, and it appearing to the court that a sufficient power of attorney has been filed in this cause authorizing A. S. McLane, in default of payment, to confess judgment before any court of competent jurisdiction, and waiving citation and service, it is therefore ordered, adjudged and decreed that the plaintiff, A. W. Wilcox, have and recover of the defendant, The Rio Grande and Pecos Railroad Company, the sum of fifty-five hundred and twenty-six $\frac{73}{100}$ dollars, with ten per cent interest thereon from the 12th day of January, 1884, for which execution may issue. It is further ordered by the court that the plaintiff have a lien on the said Rio Grande and Pecos Railroad Company and its equipments to secure the payment of this judgment, and that said railroad and its equipments, or so much thereof as may be necessary, be sold to satisfy this judgment."

On the 14th of April, 1884, C. B. Wright, a citizen of Pennsylvania and a holder of $121,000 of the bonds, the interest on which, due December 1, 1883, had not been paid, filed a bill in equity in the Circuit Court of the United States for the Western District of Texas, against the railway company and the Mercantile Trust Company, setting forth that the railway company was the owner of valuable coal lands in the County of Webb, and had recently constructed a railroad from Santo Tomas to Laredo; that the business of the railway was that of a railway and transportation company and of a miner of coal; that recently there had been expended a large amount of money in opening the coal beds, and erecting appliances for mining the coal and transporting it to market; that the principal business of the railroad was the transportation of the coal thus mined; that the value of the assets of the company consisted largely in the fact that the coal mines and the railroad were owned by the same corporation; and that any separation of the two properties would be disastrous to the creditors of the company, and would lessen materially the aggregate value of the two properties.

[498]

The bill then set forth the making of the bonds and the mortgage, and the interest of the plaintiff in the bonds; that the company had recently incurred a debt of between $20,000 and $40,000, in constructing and equipping the railroad; that, under the laws of Texas, such debt was entitled to a first lien on the road and its franchises and property, in preference to the first-mortgage bondholders, for a period of twelve months after its completion; that long before the expiration of twelve months from such completion, suits were brought upon many, if not upon all, "of the labor and material claims above mentioned," and judgment in some instances had been had thereon, on which executions had been issued which were then pending against the company, and under which, unless some relief was afforded by the court in which the bill was filed, a large portion of the property of the company would be diverted by sales by the sheriff, and the property be thus separated and its aggregate value impaired; that, in addition to such indebtedness, there was outstanding a large unsecured indebtedness, on which suit would shortly be brought, unless the property were put into the hands of a receiver; that the company was insolvent and unable to meet the interest on its fixed charges or its ordinary debts and obligations; and that there was urgent necessity for the interference of the court, to protect the property from suits and executions, and to preserve it as a whole, so that its business might continue to be carried on, and its income and assets be applied to the payment of its debts in due order, for the general advantage of all its creditors, and more especially to enable provision to be made by the first-mortgage bondholders for the payment of the obligations held by laborers, materialmen, and others, who, under the laws of Texas, were entitled to a lien upon the property, prior to that of the first-mortgage bondholders

[499]

The prayer of the bill was, that the rights of the creditors of the company might be ascertained and declared; that, as it was doubtful whether the Mercantile Trust Company could, under the laws of Texas, take possession of the mortgaged property, the court would appoint a receiver to take possession of it, with such power and authority in regard to the preservation and use of it as should seem best adapted to protect the interests of all the persons concerned; and for general relief. The bill was not sworn to.

On the same 14th of April, 1884, the railroad company filed an answer, signed by its president, and which had been sworn to by him on the 9th of April, 1884, which stated that there were outstanding a large number of claims for work and labor done in and about the construction of the railroad of the company, and judgments had been obtained on some of the claims, on which executions had been issued, and, although sales under them had been put off from time to time, portions of the property would be exposed to sale under the executions, unless prevented by the decree of the court; and that the property of the company would be irreparably injured by any separation of its coal and railway properties, the two being both necessary for the transaction of its business of mining coal and transporting it to market. The company submitted itself to the decree of the court.

On the same 14th of April, 1884, an order, signed by the circuit judge, entitled in the cause, was filed, which stated that on the 9th of April, 1884, the case was heard on a motion [500] for the appointment of a receiver, on bill and affidavits, the plaintiff and the company appearing. By the order, one Smith was appointed receiver of the company and of its franchises and all its property. The order authorized the receiver to run and operate the railway, to preserve the property, to continue the mining operations and sell the coal already mined or to be mined, and out of the proceeds to pay wages, current expenses, and interest. It also directed the receiver to ascertain and report the condition of the property and of the debts charged thereon or owing by the company, and directed that, upon presenting such report, he be authorized to borrow money to pay the running expenses of the company, and to settle and pay off liens prior to the first-mortgage bonds, and all other expenses incurred by him, including his own compensation as receiver, and to issue receiver's certificates for the same, in such form and amounts as should be from time to time authorized by the court.

On the 11th of June, 1884, the court made an order directing the receiver to prepare certificates in a form given in the order, to an amount not exceeding $25,000, which certificates, together with such further like certificates as might be thereafter authorized by the court, the order stated should be a first and exclusive lien upon all the property of the company, prior to any other liens thereupon, each certificate to be for $1,000, with interest at the rate of 8 per cent per annum, and payable out of any surplus money in the hands of the receiver after paying the running expenses of the company; that he might dispose of the certificates at not more than one per cent discount, and that, after exhausting the receipts of the railroad, he should pay out of the proceeds of the certificates: (1) the running expenses of the company which had accrued since his appointment as receiver, including the expenses of the first-mortgage bondholders in obtaining his appointment; and (2) out of the balance remaining, pay so much of the debts of the company as might be reported by the master and approved by the judge, taking an assignment of the claims to himself as receiver.

That order also appointed a master to report [501] upon all claims which should be presented to him after the publication by him of a notice calling on all persons having or asserting any claims, by judgment or otherwise, prior to the first-mortgage bonds, or entitled to a preference in payment out of the proceeds of the road, to present and file the same with him.

On the 24th of June, 1884, under that order, the said A. W. Wilcox filed with the master the following claim: "A judgment of the District Court of Webb County, Texas, rendered March 27th, 1884, in cause No. 435, in favor of the said A. W. Wilcox against the said Rio Grande and Pecos Railway Company, for $5,526.78, with ten per cent interest thereon from January 12th, 1884, and declaring and establishing a lien on said Rio Grande and Pecos Railway and its equipments, to secure the payment of said judgment, and directing the said railway and its equipments, or so much thereof as may be necessary, to be sold to satisfy the said judgment, as will more fully appear by a duly certified copy of said judgment hereto annexed, marked 'Exhibit A,' and made a part hereof. The lien declared in said judgment is based upon money due by the said Rio Grande and Pecos Railway Company to mechanics, laborers, and operatives who performed labor in the constructing and repairing and operating said railway, and thereby under the laws of Texas acquired a lien prior to all others, and that said claims so constituting a prior lien were bought by the said A. W. Wilcox, and the said Rio Grande and Pecos Railway Company acknowledged the existence thereof, and promised to pay the same by its obligation and note of date January 12th, 1884, upon which obligation and note the said judgment was rendered. The said judgment is unreversed and remains in full force. And the said A. W. Wilcox claims that his said lien, established by said judgment before the institution of this suit or the appointment of a receiver, is prior to the first-mortgage bonds, and is entitled to preference of payment out of the earnings and proceeds of said railway, and will apply to this court for such appropriate orders as will secure prompt payment." The claim was sworn to by Wilcox on the 23d of June, 1884.

The master filed his report upon the claims, and among them the claim of Wilcox, on the [502] 27th of September, 1884. By that report it appears that Wright, the plaintiff in this suit, filed objections before the master to the allowance of the claim of Wilcox, on these grounds: (1) that the judgment in favor of Wilcox in the District Court of the County of Webb was obtained by fraud and collusion between Wilcox and the president of the company; (2) that the note was without consideration and fraudulent; (3) that, for the purpose of defeating the lien of the mortgage, Wilcox falsely represented to the district court that the note was for services and for amounts advanced on claims for labor performed in the construction and maintenance of the railroad, and that it was entitled to a lien prior to all others to secure its payment; that he was not entitled to any lien; that he performed no services and owned no claims which entitled him to such lien; that any lien was barred by the limitation of one year; that the act of the president of the company in making the note and in authorizing the confession of the judgment was *ultra vires;* and that the company was not indebted to Wilcox by reason of the note, and it was without consideration. The paper containing the objections also stated that Wright had, on the 19th of July, 1884, filed his suit against Wilcox, in the District Court of the County of Webb, to set aside and annul the said judgment on account of the acts of collusion and fraud in procuring the same, and that such suit was still pending.

It also appears by the report of the master, that Wilcox introduced before the master, as evidence in support of his claim, a copy of his petition to the District Court of the County of Webb, a copy of the promissory note, and a copy of the judgment of March 27, 1884, and that other evidence was put in by the respective parties, Wilcox and Wright.

The master reported that the note included amounts which were not secured by a lien un-

der the State Act of 1879, as well as amounts which were. The conclusion of the master was that Wilcox had a valid claim against the company for $5,526.78, with 10 per cent interest from January 12, 1884; but that he had no lien prior to that of the first-mortgage bondholders. On the 6th of October, 1884, Wilcox filed exceptions to the report.

[503] On the 7th of October, 1884, the Mercantile Trust Company was duly removed from its office as trustee under the mortgage, and William S. Hassall, of Philadelphia, was appointed trustee in its place. By an order of the court, the bill was dismissed as to the Mercantile Trust Company, and Hassall as trustee was joined as plaintiff with Wright; and a decree was entered by consent, on the 20th of October, 1884, providing for a sale of the property at auction by the trustee, which was modified by a further decree made December 10, 1884, directing the sale of the property free from all liens, for a sum not less than $100,000, which sum, it was stated, would cover the amount of the receiver's certificates and of the claims reported by the master. The sale was made, and the property was purchased by Wright for the sum of $100,000. On the 19th of May, 1885, a decree was made confirming the sale and allowing certain claims as liens prior to the lien of the mortgage, and among them the claim of A. W. Wilcox, for the sum of $5,526.78, with interest at 8 per cent per annum from the day of the contracting of the lien, such amount to be paid after the payment of the receiver's certificates and before any payment to the bondholders. On the 18th of June, 1885, Hassall, as trustee, appealed to this court from such decree, but the appeal was dismissed as to all the claimants but Wilcox. *Hassall* v. *Wilcox*, 115 U. S. 398 [29: 504].

Although the statute of Texas under which the superior lien of Wilcox is claimed was passed in 1879, prior to the making of the mortgage in 1882, and although Wilcox brought his suit and obtained his judgment in the state court prior to the filing of the present bill, we do not think it can be held that the trustee under the mortgage or the bondholders were bound by that judgment rendered in a suit to which they were not made parties. Although they had a right to intervene in that suit, they were not obliged to do so, nor was Wright obliged to prosecute the suit which he brought in the state court. They had a right to come into the Circuit Court of the United States to contest the priority of Wilcox's lien, and, as his claim originated after the mortgage was made, compel him to prove affirmatively in that [504] court the existence and priority of his lien, under the statute of Texas. He undertook to do so, but the master reported that he found, from the evidence, that the note on which the judgment was predicated included amounts not secured by a lien under the Act of 1879, as well as amounts for which a lien was given under that Act; and that Wilcox had no lien prior to the first-mortgage bondholders. On exceptions by Wilcox, the circuit court sustained his exceptions, and awarded him a lien with the priority he claimed, for the full amount of $5,526.78, with interest. We do not think the evidence before the master sustained the lien for the whole of that amount

One of the exceptions taken by Wilcox to the master's report was, that the master had, by his finding, nullified the legal force and effect of the judgment of the state court. The circuit court may have proceeded on that ground, in its decree. But we do not think that the proceeding in the state court can be sustained as one *in rem*. It is essential to such a proceeding that there should at least be constructive notice, by some form of publication or advertisement, to adverse claimants, to appear and maintain their rights, before a judgment in such a proceeding can operate even as *prima facie* evidence. *Windsor* v. *McVeigh*, 93 U. S. 274, 278, 279 [23: 914, 916]. In the present case, no notice, either personal or constructive, was provided for by the Texas statute, or was given to the other lien holders.

The claim of Wilcox was presented before the master and the circuit court as a claim founded wholly on his judgment and on the statute of Texas and not as a claim arising on the principle adjudged in *Union Trust Co.* v. *Morrison*, 125 U. S. 591 [31: 825], or that acted on in the case of *Foedick* v. *Schall*, 99 U. S. 235 [25: 339], and the cases which followed it; and no facts are shown to sustain it as a claim founded on anything but the statute of Texas.

The appellant claims that the evidence before the master shows that only $382.21 of Wilcox's claim consists of items for which the statute of Texas gives a lien. But, as the master, though saying that the note included amounts for which a lien was given under the Act, did not [505] attempt to state what was the total of such amounts, *it is proper that the decree should be reversed, and the case be remanded to the Circuit Court, with a direction to allow a re-examination of the claim of Wilcox, before a master, on the same and further proofs, if desired; and it is so ordered.*

HALLET KILBOURN ET AL., *Appts.*, [505]
v.
THOMAS SUNDERLAND ET AL.

THOMAS SUNDERLAND ET AL., *Appts.*,
v.
HALLET KILBOURN ET AL.

THOMAS SUNDERLAND, *Appt.*,
v.
HALLET KILBOURN ET AL.

(See S. C. Reporter's ed. 505-520.)

Defect of parties—equity jurisdiction—remedy at law—fraud—liability of agent—agent's duty to principal—limitation of action—fraud—notice—setting aside decree—effect of a receipt.

1. A partner who has sold his interest to another partner is not a necessary party to an action for an accounting of the affairs of the partnership.
2. Where a court of equity may grant the relief sought and has jurisdiction of the subject matter, the objection that there is a plain remedy at law should be taken at the earliest opportunity and before the defendants enter upon a full defense.
3. The jurisdiction in equity attaches unless the legal remedy, both in respect to the final relief and the mode of obtaining it is as efficient as the remedy in equity.

4. The remedy in equity, in cases of account, is generally more complete and adequate than it is at law; and in a case where fraud is charged involving the consideration of fiduciary and trust relations, equity jurisdiction will be sustained.

5. Where a principal directs his agent to purchase property for him and instructs the agent that he is willing to give a certain price, and the agent purchases it for a less price, he cannot charge the principal with the larger price which the latter had instructed the agent he was willing to pay. An agent is not obliged to account for commissions which he received from third persons on property the title of which he held as their trustee, and which was conveyed to his principal.

6. Where there was no agreement that the principal should have the benefit of the agent's outstanding contracts, and the agent, before the agency commenced, had contracted to buy a piece of property, the principal cannot recover of the agent the difference between the price at which the agent had bargained for the property and the larger price at which it was subsequently sold to the principal where the latter suffered no pecuniary loss for the want of knowledge of such previous bargain, but got the property at his own offer.

7. Where a party, injured by fraud, is in ignorance of its existence, the duty to commence proceedings arises only upon discovery; and mere submission to an injury, after the act inflicting it is completed, cannot generally, and in the absence of other circumstances, take away a right of action, unless such acquiescence continues for the period limited by the statute for the enforcement of such right.

8. A principal, reposing confidence in an agent and therefore neglecting some source of knowledge which he might have sought, is not chargeable with what he might have found out upon inquiry aroused by suspicion.

9. The setting aside of the decree first rendered and the rendition of another different decree by the court below, is not ground for reversal, where the court had power to take the course it did and this court is satisfied with the result.

10. A receipt, given by the principal to the agent, for a stated amount, as being the amount of the principal's money in the agent's hands, *held*, under the circumstances of this case not to be conclusive.

[Nos. 188, 261, 262.]

Argued March 7, 8, 1889. Decided April 22, 1889.

APPEALS from a decree of the Supreme Court of the District of Columbia, in favor of complainants, for moneys illegally detained and overcharges by defendants. *Decree modified.*

Statement by *Mr. Chief Justice* **Fuller:**

In 1872, Thomas Sunderland, Curtis J. Hillyer and William M. Stewart associated themselves for the purchase and sale of real estate [506] in the City of Washington by way of investment and speculation. Hallett Kilbourn, James M. Latta and John F. Olmstead were carrying on business at that time in Washington as real estate agents, in partnership, under the firm name of Kilbourn & Latta, and they were employed, as their agents, by Sunderland, Hillyer and Stewart.

Within a period of a few weeks Sunderland, Hillyer and Stewart had purchased property through Kilbourn & Latta at a cost of several hundred thousand dollars. Sunderland's interest in the purchases was one half, Hillyer's one quarter, and Stewart's one quarter; and soon afterwards and in the same year, Stewart sold out his interest to Sunderland. In addition to these joint purchases, Sunderland purchased for himself in the same way to a large amount.

Two suits in equity in reference to the dealings between the parties had been commenced in the Circuit Court of the United States for the District of Indiana against Latta alone, and as a partner of Kilbourn & Latta, one on behalf of Sunderland and Hillyer and the other on behalf of Sunderland alone, in which process was served on Latta but not on Kilbourn or Olmstead. Subsequently the original bill in this cause was filed in the Supreme Court of the District of Columbia and a stipulation was entered into whereby the subject matter of the causes in Indiana was transferred to the litigation here, and, by amendments made in pursuance of the stipulation, all the controversies were consolidated into this suit, the bill as amended seeking relief in favor of Hillyer and Sunderland as against Kilbourn, Latta and Olmstead, and as against Latta alone, and in favor of Sunderland as against the three and also as against Latta individually. And the answers of Kilbourn and Olmstead, and the several answer of Latta put in issue all the causes of action respectively. The original bill was filed June 9, 1881, and the amendments March 22, 1882. During the proceedings Stewart, who had not been made a party in terms, entered his appearance and filed a disclaimer. The original bill and amendments alleged an arrangement between Sunderland, Hillyer and Stewart for the purchase of real estate, and charged that Kilbourn & Latta were employed as the agents of complainants and Stewart to [507] make for them the proposed purchases under an agreement set out by the complainants as follows:

"That the plaintiffs and the said Stewart should intrust unto said firm as their agents aforesaid the negotiation for and the purchase of such real estate in the said quarter of the said city as the plaintiffs and the said Stewart might elect to acquire; that they should furnish unto the said firm, when by the same thereunto required, such sums of money as might be requisite for the acquisition of the property, and that the plaintiffs and the said Stewart should pay unto the said firm, upon the purchases to be made by said firm on their account, a reasonable compensation, by way of commission, when and in case the said firm should make no charge by way of commission against the vendors of the property; but in case any such charge should be made by the said firm against the vendors, that then the plaintiffs and the said Stewart should pay unto the said firm no commission whatever; that the said firm, in consideration of so being intrusted with the purchase of such real estate and of the commissions which it might derive upon such purchases, should ascertain and point out unto the plaintiffs and the said Stewart such lots and parcels of land, in the said section of the said city, as in the judgment of the said firm might be most advantageously acquired by the plaintiffs and the said Stewart; that the said firm should advise and counsel, to the best of its judgment, knowledge, and experience, the plaintiffs and the said Stewart in respect of the purchase of any particular parcel of land within the said section which they, on their own motion, might suggest to the said firm as desirable to be purchased on their account, and that in any and all cases the said firm should negotiate for the purchase of any real property to be acquired on account of the plaintiffs and

the said Stewart at the lowest possible rate at which it could be obtained from the owner, and after ascertaining the price at which any such property might be obtained from the owner, should fairly and to the best of the knowledge and ability of the said firm inform the plaintiffs and the said Stewart whether the said price was such as to render their acquisition of the property desirable, and recommend to them whether they should purchase the property or not; that if the plaintiffs and the said Stewart consented to such purchase, the same should be made on their account by the said firm, and that upon receiving at its request from the purchasers the cash required in the first instance, and also the amount of deferred payments as the same might become payable, the said firm should make due settlement with the vendor or other person entitled to payment."

[508]

It is averred that large quantities of real estate were purchased, and that as to each purchase, Kilbourn & Latta represented that they had negotiated with the owner and obtained the lots at the lowest price, and that the price agreed on was the lowest price at which the property could be obtained, and that complainants relied on those representations; that complainants called the attention of Kilbourn & Latta to square No. 115, and requested Kilbourn & Latta to ascertain the owner and price thereof; that thereafter Kilbourn & Latta informed complainants that $65,000 was the lowest price at which the property could be obtained, and advised the purchase, which complainants authorized, paying $20,000 down, which was represented by Kilbourn & Latta to be required by the seller, and the property was conveyed to Latta as trustee for complainants; that these representations were false, and the real price, instead of being $65,000, was only $40,000, and the cash payment required only $8,000, instead of $20,000; that such representations were made for the purpose of cheating complainants and obtaining from them the sum of $25,000, which defendants appropriated to their own use; that the real facts in relation to these purchases were not discovered by them until March, 1881; that complainants, about the same time and in substantially the same manner, were defrauded in reference to the purchase of lot 17 in square 158, the purchase price being put at $8,316, when it was really only $5,000, the firm of Kilbourn & Latta thereby receiving and appropriating $3,316; that Kilbourn & Latta defrauded complainants out of the following sums through the acquisition of the following pieces of property: Square 155, the sum of $5,319.55; three lots in square 158, the sum of $2,668.70; in square 156, the sum of $22,973; that the real truth as to the last transaction did not come to their knowledge until January or February, 1882; that afterwards the property purchased and two other valuable tracts were left in the care of the firm for resale, and in consideration of the probable commissions on such sales the firm agreed that it would keep upon its books the property, look after the payment of taxes, interest, and the like, and disburse the funds therefor without any charge; that prior to January 1, 1873, complainants had sent to the firm some $250,000, and on December 31, 1876, Kilbourn & Latta held a balance in cash due to complainants of not less than $20,000, of which they appropriated $16,520 to their own use for the care and management of the property from June, 1872; that the complainants were ignorant of said charges until June, 1878; that being informed in 1877 by defendants that remittances should be sent to Latta for disbursements, considerable sums were sent to him, of which he wrongfully appropriated the sum of $5,827.50; that Sunderland individually purchased several parcels of real estate through Kilbourn & Latta under the same agreement, which was left in the hands of the said firm, and out of funds of his in their hands the firm wrongfully appropriated $5,973, and also $1,000, of which he was not informed until July, 1878; and that defendant Latta wrongfully appropriated $1,672 belonging to Sunderland of which the latter was ignorant until then.

[509]

The defendants in answering denied specifically any such agreement as that alleged by the complainants; averred that such a contract would have been void, if made; insisted that the claims were stale and complainants guilty of *laches;* and set up the Statute of Frauds and the Statute of Limitations and a receipt in full upon an accounting. They objected that Stewart was a necessary and indispensable party, averred that their charges for care and management were just, reasonable and proper, and denied all allegations of fraud.

The cause was ordered to be heard by the general term in the first instance, and that court rendered a decree January 9, 1885, in favor of the complainants and against all the defendants for various sums, namely, the sum of $5,319.55 for profit unjustly and illegally detained by the defendants from the complainants, arising out of the purchase of square No. 155, and also for the sum of $3,316 in respect to profit made by defendants in the purchase of lot 17 in square No. 158; also for $8,263.33 for overcharge made by defendants for care and management of complainant's property; and in favor of complainant Thomas Sunderland, individually, in pursuance of the stipulation of the parties filed in the cause against all of the defendants, for the sum of $5,973.33 for overcharges for care and management of property belonging to Sunderland; and also, in pursuance of said stipulation, in favor of Sunderland individually against Latta individually, for $1,672.85, being for overcharges for care and management; and also, in pursuance of said stipulation, in favor of complainants against Latta individually, for $2,838.92 for overcharge made by Latta for care and management of their property, and for $1,235.79, money retained by Latta from complainants' moneys in his hands.

[510]

For the opinion of the court, which was pronounced July 5, 1884, see *Sunderland* v. *Kilbourn*, 3 Mackey, 506.

Subsequently, upon petition for rehearing, the first decree was vacated and a second rendered January 22, 1885, awarding to complainants against defendants the sum of $3,316; and also the sum of $8,000 for excessive charges for care and management; and also in favor of complainants and against Latta individually of $2,500. From this decree an appeal was taken by the defendants jointly and by Latta individually, which is No. 188, and appeals by

the complainants jointly and by Sunderland individually, which are Nos. 261 and 262.

Mr. **M. F. Morris,** for Sunderland's Exrx.:

A petition for rehearing can have no valid or legal effect unless the parties to be affected by it have notice of its pendency; and this notice cannot be implied. It is a jurisdictional fact, and therefore must appear affirmatively from the record.

Smith v. *Woolfolk*, 115 U. S. 143 (29:357); *Vallejo* v. *Green*, 16 Cal. 160; *Nuckolls* v. *Irwin*, 2 Neb. 60; *Lane* v. *Wheless*, 46 Miss. 666; *Hettrick* v. *Wilson*, 12 Ohio St. 136.

A court of equity has jurisdiction.

Wylie v. *Coxe*, 56 U. S. 15 How. 415-420 (14: 753); *Harrison* v. *Rowan*, 4 Wash. C. C. 202.

A contract although illegal and void as to part may be good as to the residue.

Gelpcke v. *Dubuque*, 68 U. S. 1 Wall. 220 (17: 530); *U. S.* v. *Hodson*, 77 U. S. 10 Wall. 395 (19: 937).

An accounting may be had, even for the proceeds of an illegal contract, when such contract has been executed and there is no longer question of its enforcement, but of the ownership of the proceeds of it.

Planters Bank v. *Union Bank*, 83 U. S. 16 Wall. 483 (21: 473); *McBlair* v. *Gibbes*, 58 U. S. 17 How. 232 (15: 132); *Armstrong* v. *Toler*, 24 U. S. 11 Wheat. 258 (6: 468).

The land records did not give notice to the complainants.

Patterson v. *De La Ronde*, 75 U. S. 8 Wall. 292 (19: 415).

Mr. **J. H. Ralston** for Hillyer.

Messrs. **Enoch Totten** and *Shellabarger* & **J. M. Wilson,** for Kilbourn, Olmstead & Latta:

There is no jurisdiction in equity in this cause. There is a plain, adequate and complete remedy at law.

Buzard v. *Houston*, 119 U. S. 347 (30: 451); *Hayward* v. *Andrews*, 106 U. S. 672 (27: 271); *New York Guaranty & I. Co.* v. *Memphis Water Co.* 107 U. S. 205 (27: 484); *Sullivan* v. *Portland & K. R. Co.* 94 U. S. 806 (24: 324); *Litchfield* v. *Ballou*, 114 U. S. 190 (29: 132); *Killian* v. *Ebbinghaus*, 110 U. S. 568 (28: 246).

The alleged agreement as set out in the pleadings and as described in the proof is void, because inconsistent with public policy.

A double agency of a real estate agent or broker and of the purchaser involves inconsistent duties and the contract is void.

Meyer v. *Hanchett*, 43 Wis. 246; *Raisin* v. *Clark*, 41 Md. 158, 15 Am. Law Reg. N. S. 61; Story, Agency, §§ 9, 11, 195, 210, 241; *Ringo* v. *Binns*, 35 U. S. 10 Pet. 269 (9: 420); *Rupp* v. *Sampson*, 16 Gray, 398; *Stewart* v. *Mather*, 32 Wis. 355; *Farnsworth* v. *Hemmer*, 1 Allen, 494; *Walker* v. *Osgood*, 98 Mass. 348; *Bollman* v. *Loomis*, 41 Conn. 581; *Everhart* v. *Searle*, 71 Pa. 256; *Lloyd* v. *Colston*, 5 Bush, 587; *Shirland* v. *Monitor Iron Works Co.* 41 Wis. 162: 1 Lead. Cases, Eq. 250 and authorities there cited; *Marye* v. *Strouse*, 6 Sawy. 204; *Michoud* v. *Girod*, 45 U. S. 4 How. 503 (11: 1076); *Conkey* v. *Bond*, 34 Barb. 276; 4 Kent, Com. 7th ed. 475; *Bell* v. *McConnell*, 37 Ohio St. 396; *St. Louis, J. & C. R. Co.* v. *Mathers*, 71 Ill. 592; *Marsh* v. *Fairbury, P. & N. W.R. Co.* 64 Ill. 414.

Complainants are bound by the knowledge which the records of deeds disclosed.

Brant v. *Virginia Coal & Iron Co.* 93 U. S. 326 (23: 927); *Leavenworth Co.* v. *Chicago, R. I. & P. R. Co.* 18 Fed. Rep. 209; *S. C.* 5 McCrary, 508; *Sullivan* v. *Portland & K. R. Co.* 94 U. S. 806 (24: 324).

An account which has been presented, and no objection made thereto is a stated account.

1 Story, Eq. 520-526; *Wiggins* v. *Burkham*, 77 U. S. 10 Wall. 129 (19: 884); *Chappedelaine* v. *Dechenaux*, 8 U. S. 4 Cranch, 306 (2: 629); *Freeland* v. *Heron*, 11 U. S. 7 Cranch, 147 (3: 297); *Lockwood* v. *Thorne*, 11 N. Y. 170; *Baker* v. *Biddle*, 1 Baldw. 418; *Hopkirk* v. *Page*, 2 Brock. 29; *White* v. *Macon*, 3 Cranch, C. C. 250; *Bainbridge* v. *Wilcocks*, 1 Baldw. 539; *Bradley* v. *Richardson*, 2 Blatchf. 354; *Marye* v. *Strouse*, 6 Sawy. 209; *Richmond Mfg. Co.* v. *Starks*, 4 Mason, 297; *Leather Manufacturers Nat. Bank* v. *Morgan*, 117 U. S. 96 (29: 811).

The objection of want of parties is taken in the pleadings. The absence of a necessary party is fatal, and the bill must be dismissed.

Alexander v. *Horner*, 1 McCrary, 634; *Milroy* v. *Stockwell*, 1 Ind. 35; *Robertson* v. *Carson*, 86 U. S. 19 Wall. 95 (22: 178).

Mr. Chief Justice **Fuller** delivered the opinion of the court: [513]

It is argued on behalf of Kilbourn, Latta, and Olmstead that Stewart was an indispensable party to the cause, and that the bill should have been dismissed because he was not made such. Title to the real estate purchased by Sunderland, Hillyer, and Stewart was placed in Latta in trust as matter of convenience, and it appears that in December, 1872, Stewart sold all his interest to Sunderland, evidencing the transaction by a memorandum in writing, in form of a bill of sale, which is not produced, but the fact is admitted by stipulation, and that he subsequently executed a more formal assignment, which is given in the record. Stewart testifies that Sunderland "was, with the knowledge and consent of the firm of Kilbourn & Latta, substituted in my place, and from that day I ceased to have any interest whatever in the transactions or business." [514] On the 1st of November, 1883, the appearance of Stewart was entered by counsel, with a disclaimer "of all right and cause of action on his part against the defendants, or any of them, on account of any of the matters set forth or involved in this cause." Under these circumstances we regard this objection as untenable.

The point is also pressed that the remedy at law was plain, adequate and complete, and jurisdiction in equity therefore wanting. We do not understand counsel to repudiate the stipulation, or to suggest multifariousness or any objection arising upon the rather unusual mode pursued to secure a conclusion in four cases rolled into one, but to contend that the determination of all the matters in issue belongs on the law side of the court. The defendants fully answered the bill, and raised no such objection, and, the cause being at issue, and evidence taken, it was ordered on the 23d of February, 1883, by consent, to be heard by the general term in the first instance. On the 24th of March, 1884, the defendant moved to

dismiss on the ground of the adequacy of the remedy at law.

We have had occasion recently to remark that where it is competent for the court to grant the relief sought, and it has jurisdiction of the subject matter, this objection should be taken at the earliest opportunity and before the defendants enter upon a full defense. *Reynes* v. *Dumont*, 130 U. S. 354 [*ante*, 934]. By stipulation several suits had in effect been consolidated with the intention, by consent, of adjusting the conflicting claims between Sunderland and Hillyer jointly and Sunderland alone, and Kilbourn, Latta and Olmstead, and Latta alone, and the parties had proceeded in their pleadings upon that theory, and taken all the evidence, and had the cause set down for hearing. It is then suggested that Sunderland and Hillyer and Sunderland cannot maintain their suit in equity, but must be remitted to actions at law. We do not agree with this view.

The jurisdiction in equity attaches unless the legal remedy, both in respect to the final relief [515] and the mode of obtaining it, is as efficient as the remedy which equity would confer under the same circumstances. The parties stood in a fiduciary relation towards each other, and, in the course of the transactions between them, from thirty to forty different lots of ground were bought for the complainants in upwards of fifteen distinct purchases. As to five of these purchases fraud is specifically charged. A considerable amount of complainants' money was in defendants' hands, and a counterclaim was set up by them in relation to services performed in and about the care of a portion of the property purchased; services covering many payments for taxes, interest, etc.; making of loans and procuring renewals; receipts and advances. The transactions were all parts of one general enterprise, and the claims of a character involving trust relations. Before the severance of the connection between the parties, Kilbourn & Latta dissolved, and the amounts due from Kilbourn & Latta, if any, and from Latta alone, if any, to Sunderland and Hillyer or to Sunderland, and the offsets and counterclaims of Kilbourn & Latta, or of Latta, all sprang from one series of operations, and required an accounting on both sides; and that accounting, until disentangled by the investigation of the court, was apparently complicated and difficult. "There cannot be any real doubt that the remedy in equity, in cases of account, is generally more complete and adequate than it is or can be at law" (1 Story, Eq. Jur. § 450); and, as the remedy at law in the case in hand was rendered embarrassed and doubtful by the conduct of the defendants, and fraud has in equity a more extensive signification than at law, and, as charged here, involved the consideration of the principles applicable to fiduciary and trust relations between the parties throughout the period of their connection, we concur with the supreme court of the District in sustaining the jurisdiction.

Complainants proceeded upon the liability of the defendants to account for the unauthorized appropriation of moneys received as complainants' agents, the amount of which they sought to reduce by excessive charges for the care and management of complainants' property; and also for certain differences between what was paid by complainants for property purchased through defendants at one price, though ob- [516] tained by defendants at another. The different amounts claimed are sufficiently set forth in the statement of the case.

By the decree the court awarded in favor of the complainants and against all the defendants, the sum of $3,816 as received from complainants in the purchase of lot 17, square 158, under circumstances requiring its return, and the sum of $8,000 for excessive charges; and in favor of the complainants and against the defendant Latta for the sum of $2,500 for overcharges; and disallowed all the other items. The correctness of these allowances and disallowances is questioned upon these appeals respectively.

We affirm the conclusions reached by the supreme court of the District in disposing of the various amounts alleged to have been so received as to justify a decree against the defendants in respect to them.

As to lot No. 17 in square No. 158, the direction of the complainants to the defendants was, "We are willing to give 50 cents a foot for any property you can get in that square." This was the maximum price, and lot 17 at that rate would have amounted to $8,816. The defendants succeeded in purchasing it for $5,000, and then charged it to the complainants at the maximum. Clearly, the money so received must be accounted for to the complainants from whom it was obtained by a violation of fiduciary relations.

The claim for profits on square 156, of $14,601, rests on different ground. That property had been purchased by a real estate association in October, 1871, for speculative purposes, and conveyed to Kilbourn by Thomas Young, the vendor, as trustee for the association. Evidence is given by which it is attempted to show that Kilbourn & Latta had been guilty of dereliction of duty as between themselves and the real estate association; and it is argued that they did not account to their associates in that concern for their half of the profits. But with all this these complainants have nothing to do. The profits which Kilbourn & Latta were entitled to as between themselves and the real estate association, and the commissions which they received from the latter can hardly be held [517] as to be accounted for to those complainants, in the absence of an agreement that the benefit of all contracts defendants had with others should be shared with them.

As to square No. 115, Kilbourn & Latta, before their connection with complainants, had made an offer for the square, which was accepted; and, while the title was being put in marketable shape, in order that the sale might be consummated, their agency for complainants was entered upon. Kilbourn & Latta's bargain for the lot was $40,000, but there was no agreement, as we have said before, that the complainants should have the benefit of all defendant's outstanding contracts; and, as they were contented with their purchase, it is difficult to see upon what ground they can recover here. The relations between the parties were such that Kilbourn & Latta should have disclosed that they were acting as principals in this sale, but the complainants suffered no pecuniary loss for want of such disclosure, since they took the property at their own price. Their remedy, if

they were deceived, lay in throwing up the bargain; but they did not do so, and could not treat it, as is well said (3 Mackey, 525), "as a contract fulfilled and as a contract broken." The same remarks apply to square 155, and to lot 10 in square No. 158, the bargains having been made before the sales to complainants; and as to lot 8, and half of lot 9 in square No. 158, the defendants deny the receipt even of commissions.

It may be that the money of complainants enabled the defendants to obtain considerable profits in several ventures; but the case made affords no substantial ground for the interposition of the court on that account.

In relation to the alleged overcharges for care and management, the services rendered are set forth in the opinion of the supreme court of the District with much particularity, and the grounds for liberality in the premises strongly urged. We do not care to repeat what has been so well stated there. The firm of Kilbourn & Latta was dissolved December 31, 1876, in possession at the time of a large amount of complainants' money, as against which charges were entered on the firm's books December 12, 1876, for "care and management" from May, 1872, of the property of Sunderland and Hillyer, of $16,526.67, and of the property of Sunderland, of $5,973.33. Similar charges were made by Latta after the dissolution, against Sunderland and Hillyer, to the amount of $5,677.85, and against Sunderland, of $1,672.85. The court found the complainants entitled to recover the sum of $8,000 against all the defendants, and the sum of $2,500 against Latta individually. We think the sum of $1,235.77 should also be allowed against Latta. His account with Sunderland and Hillyer showed a balance due them, June 20, 1878, of $5,480.93, and his account with Sunderland showed an indebtedness from the latter, August 7, 1878, of $4,245.16; and, as counsel for complainants concede the propriety of applying this sum on the amount due Sunderland and Hillyer, a balance of $1,235.77 is left, for which Latta should account with interest from August 7, 1878. The court ruled adversely to the claim of Sunderland against Latta, for overcharges, of $1,672.85, in respect to services rendered, and to the claim of Sunderland against all the defendants for $1,000 commission on sale of Stewart's house. We accept these results, but we are of opinion that Sunderland should be awarded, against all the defendants, a portion of the $5,973.33 charged for services rendered him, and, applying the rule adopted by the District Supreme Court, we decided that he should be decreed the sum of $2,986.66 in respect of this item, with interest from December 12, 1876.

[518]

In answer to the defenses of laches and limitation the complainants contend that the alleged bad faith of defendants was not discovered by them until a short time before the bill was filed, and that they had no intelligible information of the excess in charges for care and management until late in June, 1878.

Reasonable diligence is of course essential to invoking the activity of the court, but what constitutes such diligence depends upon the facts of the particular case. Where a party injured by fraud is in ignorance of its existence, the duty to commence proceedings arises only upon discovery; and mere submission to an injury after the act inflicting it is completed cannot generally, and in the absence of other circumstances, take away a right of action, unless such acquiescence continues for the period limited by the statute for the enforcement of such right. *DeBussche* v. *Alt*, L. R. 8 Ch. Div. 286, 314. We hold that the complainants moved with sufficient promptness upon discovering the fraud, and that although, reposing confidence in their agents, they may have neglected availing themselves of some source of knowledge they might have sought, the defendants cannot be allowed to say that complainants ought to have suspected them, and are chargeable with what they might have found out upon inquiry aroused by such suspicion.

[519]

And we are satisfied from the evidence that this suit was commenced as against each and all the defendants within the statutory period after information of the charges for care and management reached the complainants, and that the accounts were so rendered that the rule of acquiescence ordinarily obtaining as between merchants is not applicable here.

On the 10th of September, 1878, Sunderland gave Latta a receipt for $2,715.58 as "Received of Kilbourn & Olmstead, on account of the late firm of Kilbourn & Latta," signed "Sunderland and Hillyer" and "Thomas Sunderland," that $2,715.58 being the amount of complainants' money in their hands, for which defendants admitted their liability; and this is resorted to as conclusive evidence, or at least as of persuasive force, upon the question of the alleged overcharges. In view of the form of the receipt and the testimony as to the facts attending its being signed, we do not attribute that weight to it insisted upon by counsel.

We need not discuss the evidence bearing upon the alleged contract between the parties. Necessarily, the agent for the buyer cannot be the agent for the seller at the same time. But we think that, under the pleadings, the stipulations, and the evidence, a decree was properly passed below and should not be disturbed here for any reason arising upon the record in its bearing on the original terms of the arrangement, nor have we been convinced by the earnest argument of counsel for complainants that the setting aside of the decree first rendered, and the rendition of another decree in some respects different, entitles him to a reversal, as the court had power to take the course it did; and upon a consideration of the whole case we are sufficiently satisfied with the result, except in the particulars indicated.

[520]

The decree is affirmed, except so far as it fails to allow the sum of $1,235.77, in favor of Sunderland and Hillyer against Latta individually, and also the sum of $2,986.66, in favor of Sunderland against Kilbourn, Latta and Olmstead; and, as to the nonallowance of those sums, it is reversed, with directions to modify said decree by adding them, with interest, in conformity with this opinion; the costs of this Court to be paid by Kilbourn, Latta and Olmstead; and it is so ordered.

Mr. Justice **Field**, dissenting.

[456]

J. B. HURLBUT, *Appt.*,
v.
John J. SCHILLINGER ET AL.

(See S. C. Reporter's ed. 456-472.)

Construction of letters patent for concrete pavements—effect of disclaimer—infringment—equivalent.

1. The proper construction of reissued letters patent No. 4384 granted to John J. Schillinger, May 2, 1871, for an improvement in concrete pavements is, that the invention consists in dividing the pavement into blocks so that one block can be removed and repaired without injury to the rest of the pavement.
2. The effect of the disclaimer was, to leave the patent to be one for a pavement wherein the blocks are formed by interposing some separating material between them. To limit the patent to the permanent interposition of a material, equivalent to tar paper, would limit the actual invention.
3. The first claim of the reissue, as it stood after the disclaimer, *held* to be infringed, because defendant's pavement is a concrete pavement laid in detached blocks or sections, substantially in the manner described in the specification of the reissue, the detached blocks in the upper course being the equivalent of the detached blocks or sections of the Schillinger pavement.
4. The second claim of the reissue *held* to be infringed, because the temporary use of the trowel or cutting instrument to divide the upper course into blocks is the equivalent of the tar paper of the Schillinger patent.

[No. 215.]

Argued March 19, 1889. Decided April 22, 1889.

APPEAL from a decree of the Circuit Court of the United States for the Northern District of Illinois, in favor of plaintiffs in a suit for the infringement of reissued letters patent for an improvement in concrete pavements. *Affirmed.*

The facts are stated in the opinion.

Messrs. **L. L. Bond** and *E. A. West*, for appellant:

Courts have no authority to enlarge a claim. *Keystone Bridge Co.* v. *Phœnix Iron Co.* 95 U. S. 278 (24:345).

Where a patent is for a combination or arrangement of certain elements, the elements are to be taken as old and common, or public property.

Corn-planter Patent Cases, 90 U. S. 23 Wall. 224 (23:170); *Miller* v. *Bridgeport Brass Co.* 104 U. S. 352 (26:784).

An equivalent is the same as the thing itself. *Union Paper Bag Machine Co.* v. *Murphy*, 97 U. S. 120 (24:935).

The mere carrying forward of an old idea with better results, is not such an invention as will support a patent.

Smith v. *Nichols*, 88 U. S. 21 Wall. 112 (22:566); *Roberts* v. *Ryer*, 91 U. S. 159 (23:270); *Heald* v. *Rice*, 104 U. S. 755-6 (26:916, 917); *Atlantic Works* v. *Brady*, 107 U. S. 192 (27:438).

Patentees, who are not pioneers in the art, are limited to their actual improvements.

Chicago & N. W. R. Co. v. *Sayles*, 97 U. S. 561 (24:1056); *Duff* v. *Sterling Pump Co.* 107 U. S. 636 (27:517).

The end to be accomplished is not the subject of a patent.

Carver v. *Hyde*, 41 U. S. 16 Pet. 513 (10:1051); *Burr* v. *Duryee*, 68 U. S. 1 Wall. 531 (17:650); *Fuller* v. *Yentzer*, 94 U. S. 291 (24:104); *Brooks* v. *Fiske*, 56 U. S. 15 How. 213 (14:665); *Snow* v. *Lake Shore & M. S. R. Co.* 121 U. S. 630 (30:1008).

A patentee cannot find infringement by functions, unless he is the originator of the device or art.

Ashcroft v. *Boston & L. R. Co.* 97 U. S. 189 (24:982); *Matthews* v. *Boston Machine Co.* 105 U. S. 59 (26:1024); *Bridge* v. *Excelsior Mfg. Co.* 105 U. S. 618 (26:1190); *Neacy* v. *Allis*, 13 Fed. Rep. 874; *McCormick* v. *Talcott*, 61 U. S. 20 How. 402 (15:930).

The reported cases which are founded on this patent, are: *Schillinger* v. *Gunther*, 14 Blatchf. 152, 2 Bann. & Ard. 544; *S. C.* 15 Blatchf. 303, 3 Bann. & Ard. 491; *Schillinger* v. *Greenway Brewing Co.* 17 Fed. Rep. 244; *Cal. A. S. Paving Co.* v. *Perine*, 8 Fed. Rep. 821; *Cal. A. S. Paving Co.* v. *Freeborn*, 8 Sawy. 443, 17 Fed. Rep. 735; *Cal. A. S. Paving Co.* v. *Molitor*, 113 U. S. 609 (28:1106); *Cal. A. S. Paving Co.* v. *Schalicke*, 119 U. S. 401 (30:471); *Schillinger* v. *Cranford*, 2 Cent. Rep. 630, 4 Mackey, 450, 37 Pat. Off. Gaz. 1349; *Schillinger* v. *Middleton*, 31 Fed. Rep. 736.

The burden of proof on the question of infringement is on the appellees.

Cammeyer v. *Newton*, 94 U. S. 231 (24:74); *Bates* v. *Coe*, 98 U. S. 49 (25:74).

Giving to the appellees appellant's entire profits was wrong.

Garretson v. *Clark*, 111 U. S. 120 (28:371); *Black* v. *Thorne*, 111 U. S. 122 (28:372).

Evidence of the state of the art is admissible.

Brown v. *Piper*, 91 U. S. 41 (23:201); *Vance* v. *Campbell*, 66 U. S. 1 Black, 427 (17:168); *Agawam Woolen Co.* v. *Jordan*, 74 U. S. 7 Wall. 583 (19:177); *Blanchard* v. *Putnam*, 75 U. S. 8 Wall. 420 (19:433); *Slawson* v. *Grand St. P. P. & F. R. Co.* 107 U. S. 649 (27:576).

Courts take judicial notice of common knowledge and use.

McCloskey v. *Du Bois*, 20 Blatchf. 7, 20 Pat. Off. Gaz. 1086; *Terhune* v. *Phillips*, 99 U. S. 592 (25:293); *Brown* v. *Piper*, 91 U. S. 43 (23:202); *Gill* v. *Wells*, 89 U. S. 22 Wall. 29 (22:711).

Under appellees' contention, their patent comes clearly within the reasons and findings of this court in the pavement case of *Guidet* v. *Brooklyn*, 105 U. S. 550 (26:1106); *Phillips* v. *Detroit*, 111 U. S. 604 (28:532).

Disclaimers forbid any subsequent enlargement.

New York Belting & Packing Co. v. *Sibley*, 15 Fed. Rep. 386; *Tyler* v. *Welch*, 3 Fed. Rep. 636; *White* v. *E. P. Gleason Mfg. Co.* 17 Fed. Rep. 159; *Dunbar* v. *Myers*, 94 U. S. 193 (24:37); *Atlantic Giant Powder Co.* v. *Hutings*, 21 Fed. Rep. 519; *Union Met. Cartridge Co.* v. *U. S. Cartridge Co.* 112 U. S. 642 (28:833).

The patent is only carrying forward an old idea in a slightly different way, without better results.

Smith v. *Nichols*, 88 U. S. 21 Wall. 112 (22:566); *Roberts* v. *Ryer*, 91 U. S. 159 (23:270); *Hollister* v. *Benedict*, 113 U. S. 59 (28:901).

The plaintiff cannot recover the profits of the manufacture, sale or use of anything but the patented improvement.

Mowry v. *Whitney*, 81 U. S. 14 Wall. 620, 649 (20:860, 865); *Philp* v. *Nock*, 84 U. S. 17 Wall. 460 (21:679); *Goulds Mfg. Co.* v. *Cowing*, 12 Blatchf. 243, 14 Blatchf. 315; *Black* v. *Munson*, 14 Blatchf. 265; *Buerk* v. *Imhaeuser*, 14

Blatchf. 19; *Blake* v. *Robertson*, 94 U. S. 728 (24:245); *Garretson* v. *Clark*, 15 Blatchf. 70.

Mr. **Geo. W. Hey**, for appellees:

It is clearly proven in this case that defendant Hurlbut has infringed the Schillinger patent.

Grant v. *Raymond*, 31 U. S. 6 Pet. 218 (8:376); *Ames* v. *Howard*, 1 Sumn. 482-485; *Blanchard* v. *Sprague*, 3 Sumn. 535-539; *Davoll* v. *Brown*, 1 Wood & M. 53, 57; *Parker* v. *Haworth*, 4 McLean, 372; *Le Roy* v. *Tatham*, 55 U. S. 14 How. 181 (14:367).

The proper measure of damages is the net profit actually realized by the defendant from the making and sale of his concrete flag pavements.

Tilghman v. *Proctor*, 125 U. S. 136 (31:664); *Brady* v. *Atlantic Works*, 3 Bann. & Ard. 577, 15 Pat. Off. Gaz. 965; *Cox* v. *Griggs*, 2 Fish. Pat. Cas. 174; *Hays* v. *Sulsor*, 1 Fish. Pat. Cas. 582; 1 Bond, 279; *Bell* v. *Daniels*, 1 Bond, 212, 1 Fish. Pat. Cas. 372; *Wayne* v. *Holmes*, 1 Bond, 27, 2 Fish. Pat. Cas. 20; *Serrell* v. *Collins*, 1 Fish. Pat. Cas. 289; Curtis, Pat. § 338; *Lowell* v. *Lewis*, 1 Mason, 184; *Whittemore* v. *Cutter*, 1 Gall. 429.

[457] *Mr. Justice* **Blatchford** delivered the opinion of the court:

This is a suit in equity, brought in the Circuit Court of the United States for the Northern District of Illinois, by John J. Schillinger and Elmer J. Salisbury against J. B. Hurlbut, [458] founded on the alleged infringement of reissued letters patent No. 4364, granted to John J. Schillinger, May 2, 1871, for an "improvement in concrete pavements," on the surrender of original letters patent No. 105,599, granted to said Schillinger, July 19, 1870. The defenses set up in the answer are the invalidity of the reissue, want of utility in the invention, want of novelty, and noninfringement.

The bill was filed in October, 1882. Salisbury having died, the suit was, so far as his interest was concerned, revived in March, 1884, in the name of Olive G. Salisbury, as administratrix. The interest of Salisbury was that he was the exclusive licensee under the reissued patent for the State of Illinois. Issue having been joined, proofs were taken on both sides, and on the 15th of May, 1884, the court entered an interlocutory decree, adjudging that the reissued patent was valid, that the defendant had infringed it, and that the administratrix of Salisbury recover profits and damages from the 26th of August, 1882, the date of the license to Salisbury. The decree also ordered a reference to a master to take an account of the profits and the damages.

The master took proofs, and on the 30th of September, 1884, filed his report, to the effect that between August 26, 1882, and May 20, 1884, the defendant had laid 70,909 feet of pavement by the use of the plaintiff's patent, for which he should be held to account; and that the plaintiffs had shown an established license fee of five cents a square foot, or $3,545.45, as damages, which amount he reported. He also reported that the defendant's profits had amounted to four cents a square foot. The defendant excepted to this report, and, on a hearing, the court held that the evidence did not establish a fixed license fee as a royalty, and that the proper amount of recovery was the defendant's profits, at the rate of four cents a square foot, or $2,836.36; and it entered a final decree, on the 16th of November, 1885, for that amount. The defendant has appealed from that decree.

The specifications, claims and drawings of the original and the reissued patents are as follows, the specifications and claims being placed in parallel columns, the parts of each which [459] are not found in the other being in italic, and the drawings of the original and the reissue being the same:

Original.	*Reissue.*
"Be it known that I, John J. Schillinger, of the City, County, and State of New York, have invented a new and useful improvement in concrete pavements; and I do hereby declare the following to be a full, clear, and exact description thereof, which will enable those skilled in the art to make and use the same, reference being had to the accompanying drawing, forming part of this specification, in which drawing—	"Be it known that I, John J. Schillinger, of the City, County, and State of New York, have invented a new and useful improvement in concrete pavements; and I do hereby declare the following to be a full, clear, and exact description thereof, which will enable those skilled in the art to make and use the same, reference being had to the accompanying drawing, forming part of this specification, in which drawing—
"Figure 1 represents my pavement *in plan view*. Fig. 2 is a vertical section of the *pavement*.	"Figure 1 represents a *plan of* my pavement. Fig. 2 is a vertical section of the *same. Similar letters indicate corresponding parts.*
"This invention relates to *pavements for sidewalks and other purposes, and consists in combining*, with the joints of concrete *pavements*, strips of tar-paper or equivalent material arranged between the several blocks in such a manner as to produce a suitable tight joint and yet allow the blocks to be raised separately without affecting *or injuring* the blocks adjacent thereto.	"This invention relates [460] to *a concrete pavement which is laid in sections, so that each section can be taken up and relaid without disturbing the adjoining sections.* With the joints of *this sectional* concrete *pavement are combined* strips of tar-paper or equivalent material arranged between the several blocks *or sections* in such a manner as to produce a suitable tight joint and yet allow the blocks to be raised separately without affecting the blocks adjacent thereto.
"In carrying out my invention I form the concrete by mixing cement with sand and gravel or other suitable *materials to* form a *suitable* plastic *composition*, using about the following proportions: One part, by measure, of cement; one part, by measure, of sand, and from three to six parts, by measure, of gravel, *using* sufficient water to *make* the mixture plastic; but I do not confine myself to any proportions for making the concrete composition. While the mass is plastic I lay or spread the same *upon* the foundation or bed of the pavement, either in *moulds* or between movable joists of the proper thickness, so as to form the edges of the concrete blocks *a a*, &c. When the block *a* has *been formed* I *take strips of tar-paper b, of a width*	"In carrying out my invention I form the concrete by mixing cement with sand and gravel or other suitable *material* to form a plastic *compound*, using about the following proportions: One part, by measure, of cement; one part, by measure, of sand, and from three to six parts, by measure, of gravel, *with* sufficient water to *render* the mixture plastic; but I do not confine myself to any *definite* proportions *or materials* for making the concrete composition. While the mass is plastic I lay or [461] spread the same *on* the foundation or bed of the pavement, either in *moulds* or between movable joists of the proper thickness, so as to form the edges of the concrete blocks *a a, one block being formed after the other.* When the *first* block has *set* I *remove the joists or*

equal or almost equal to the height of the block, and place them up against the edges of the block in such a manner that they form the joints between such block and the adjacent blocks. After completing one block, *a*, I place the tar-paper *b* along the edge where the next block is to be formed, and I put the plastic composition for such next block up against the tar-paper joint and proceed with the formation of the new block until it is completed. In this manner I proceed *in making all the blocks* until the pavement is completed, interposing tar-paper between their several joints as described. The paper constitutes a tight water-proof joint, but it allows the several blocks to heave separately from the effects of frost, or to be raised or removed separately, whenever occasion may arise, without injury to the adjacent blocks. The [462] paper *does not adhere* when placed against the *edge of the fully formed* block, and therefore the joints are always free between the several blocks, although *adherence may take place between the paper and* the *plastic* edges of the blocks *which are* formed *partitions from between it and the next block to be formed, and then I form the second block, and so on, each succeeding block being formed after the adjacent blocks have set,* [*and since the concrete in setting shrinks, the second block when set does not adhere to the first, and so on,*] *and when the pavement is completed each block can be taken up independent of the adjoining blocks. Between the joints of the adjacent blocks are placed strips b of tar-paper or other suitable material in the following manner:* After completing one block, *a*, I place the tar-paper *b* along the edge where the next block is to be formed, and I put the plastic composition for such next block up against the tar-paper joint and proceed with the formation of the new block until it is completed. In this manner I proceed until the pavement is completed, interposing tar-paper between the several joints, as described. The paper constitutes a tight, water-proof joint, but it allows the several blocks to heave separately from the effects of frost, or to be raised or removed separately, whenever occasion may arise, without injury after the *paper joints are set up in place.*

"What I claim as new and desire to secure by letters patent is—

"The arrangement of tar-paper or its equivalent between adjoining blocks of concrete, substantially as and for the purpose *described.*"

to the adjacent blocks. The paper when placed against the block *first formed does not adhere thereto*, and therefore the joints are always free between the several blocks, although *the paper may adhere to* the edges of the *block or* blocks formed after the *same has been set up in its place between the* joints. [*In such cases, however, where cheapness is an object, the tar-paper may be omitted and the blocks formed without interposing anything between their joints, as previously described. In this latter case the joints soon fill up with sand or dust, and the pavement is rendered sufficiently tight for many purposes, while the blocks are detached from each other and can be taken up and relaid, each independent of the adjoining blocks.*]

"What I claim as new and desire to secure by letters patent is— [463]

"1. *A concrete pavement laid in detached blocks or sections, substantially in the manner shown and described.*

"2. The arrangement of tar-paper or its equivalent between adjoining blocks of concrete, substantially as and for the purpose *set forth.*

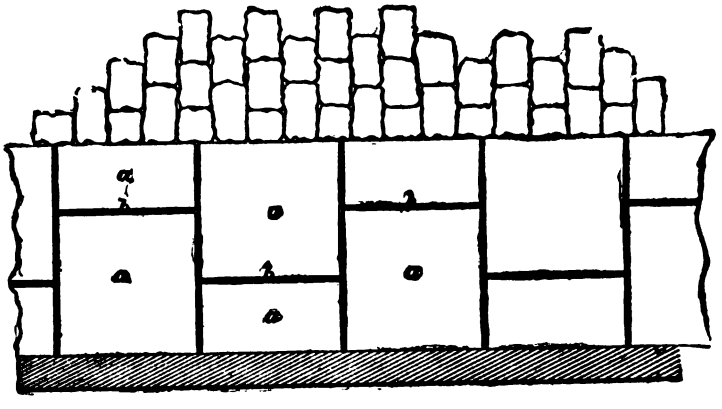

Fig. 2

On the 1st of March, 1875, Schillinger filed in the Patent Office the following disclaimer: "To the Commissioner of Patents: Your petitioner, John J. Schillinger, of the City and County and State of New York, represents that letters patent of the United States, reissue No. 4,364, bearing date May 2, 1871, were granted to him for an improvement in concrete pavements. That he has reason to believe that, through inadvertence, accident or mistake, the specification and claim of said letters patent are too broad, including that of which your petitioner was not the first inventor, and he therefore hereby enters his disclaimer to the follow-

ing words: 'And since the concrete in setting shrinks, the second block when set does not adhere to the first, and so on,' and which occurs near the middle part of the said specification, and to the following words near the end of the specification: 'In such cases, however, where cheapness is an object, the tar-paper may be omitted and the blocks formed without interposing anything between their joints, as previously described. In this latter case the joints soon fill up with sand or dust, and the pavement is rendered sufficiently tight for many purposes, while the blocks are detached from each other and can be taken up and relaid, each independent of the adjoining blocks.' Your petitioner hereby disclaims the forming of blocks from plastic material without interposing anything between their joints while in the process of formation. Your petitioner owns the said patent and the whole interest therein, except in the following places or territory, for which he has granted exclusive licenses under royalty, or sold rights under said [464] patent, to wit: the Counties of Kings, Queens, and Richmond, New York State; Hartford County, Connecticut; the District of Columbia; the States of New Jersey, Georgia, Maryland, Louisiana, Texas, Ohio, Michigan, Missouri, and Illinois, which above named States and places comprise all the territory for which he has sold or granted exclusive licenses or rights in or under said patent, to the best of his recollection, knowledge and belief."

The words specifically disclaimed by the disclaimer are embraced in brackets in the copy of the specification of the reissue above set forth.

The Schillinger patent has been before several of the Circuit Courts of the United States, and also before this court, for adjudication.

In the Circuit Court for the Southern District of New York, before *Judge* Shipman, in February, 1877, in *Schillinger* v. *Gunther*, 14 Blatchf. 152, and 2 Ban. & Ard. 544, and 11 Pat. Off. Gaz. 881; and in the same case, before *Judge* Blatchford, in August, 1879, 17 Blatchf. 66, and 4 Ban. & Ard. 479, and 16 Pat. Off. Gaz. 905; in the Circuit Court for the District of California, before *Judge* Sawyer, in May, 1881, in *California Artificial Stone Paving Co.* v. *Molitor*, and *The Same* v. *Perine*, 7 Sawy. 190, and 8 Fed. Rep. 821, and 20 Pat. Off. Gaz. 813; in the Circuit Court for the Northern District of New York, before *Judge* Blatchford, in July, 1883, in *Schillinger* v. *Greenway Brewing Co.* 21 Blatchf. 383, and 17 Fed. Rep. 244, and 24 Pat. Off. Gaz. 495; and in the Circuit Court for the Southern District of Ohio, before *Judge* Sage, in June, 1884, in *Kuhl* v. *Mueller*, 21 Fed. Rep. 510, and 28 Pat. Off. Gaz. 541, the patent was sustained. In the Supreme Court of the District of Columbia, in general term, in July, 1885, in *Schillinger* v. *Cranford*, 2 Cent. Rep. 680, 4 Mackey, 450, and 37 Pat. Off. Gaz. 1349, it was held void, on the question of novelty. It was also interpreted by *Judge* Sawyer, in the Circuit Court for the District of California, in *California Artificial Stone Paving Co.* v. *Freeborn*, in January, 1883, 8 Sawy. 443, and 17 Fed. Rep. 785, and by *Judge* Deady, in the Circuit Court for the District of Oregon, in August, 1887, in *Schillinger* v. *Middleton*, 31 Fed. Rep. 736.

The patent was before this court in *California A. S. Paving Co.* v. *Molitor*, 113 U. S. 609 [465] [28:1106], in March, 1885, but only on a question of contempt, and in *California A. S. Paving Co.* v. *Schalicks*, 119 U. S. 401 [30:471], in December, 1886.

We are of opinion that the proper construction of the reissued patent is, that the invention consists in dividing the pavement into blocks, so that one block can be removed and repaired without injury to the rest of the pavement, the division being effected by either a permanent or a temporary interposition of something between the blocks. Concrete pavement had been laid before in sections, without being divided into blocks. The effect of the disclaimer was to leave the patent to be one for a pavement wherein the blocks are formed by interposing some separating material between them. To limit the patent to the permanent interposition of a material equivalent to tar-paper, would limit the actual invention. The use of a bottom layer of coarse cement, and placing on it a course of fine cement, and dividing the upper course into blocks by a trowel run partially or wholly through the upper course while it is plastic, in a line coincident with the joints between the sections in the lower layer, accomplishes the substantial results of Schillinger's invention, in substantially the way devised by him, and is within the patent as it stands after the disclaimer. The disclaimer took out of the first claim of the reissue only so much thereof as claimed a concrete pavement made of the plastic material laid in detached blocks, without interposing anything in the joints in the process of formation, leaving that claim to be one for such a pavement laid in detached blocks, when free joints are made between the blocks, by interposing permanently or temporarily between them, in the process of their formation, tar-paper or its equivalent.

In *California A. S. Paving Co.* v. *Schalicks*, *supra*, it was said, p. 406 [472]: "The evidence in the present case shows that the defendant, during the process of making his pavement, marked off its surface into squares. But the question is whether he, to any extent, divided it into blocks, so that the line of cracking was controlled, and induced to follow the joints of the divisions, rather than the body of the block, and so that a block could be taken out, and a [466] new one put in its place, without disturbing or injuring an adjoining block. The specification makes it essential that the pavement shall be so laid in sections 'that each section can be taken up and relaid without disturbing the adjoining sections.' Again, it says that the joint between the blocks 'allows the several blocks to heave separately, from the effects of frost, or to be raised or removed separately, whenever occasion may arise, without injury to the adjacent blocks.' This is essential; and, in all the cases where infringement has been held to have been established, there have been blocks substantially separate, made so by the permanent or temporary interposition of a separating medium or a cutting instrument, so that one block could upheave or be removed without disturbing the adjoining blocks. The patentee, in the disclaimer, expressly disclaimed 'the forming of blocks from plastic material without interposing anything between their joints while in the

process of formation.' It appears that the defendant laid his pavement in strips from the curb of the sidewalk inward to the fence, in one mass, and then marked the strip cross wise with a blunt marker, which is made an exhibit, to the depth of about one sixteenth of an inch. But it is not shown that this produced any such division into blocks as the patent speaks of, even in degree. There were no blocks produced, and, of course, there was nothing interposed between blocks. The mass underneath was solid, in both layers, laterally. So far as appears, what the defendant did was just what the patentee disclaimed. The marking was only for ornamentation, and produced no free joints between blocks, and the evidence as to the condition of the defendant's pavements after they were laid shows that they did not have the characteristic features above mentioned as belonging to the patented pavement."

In its decision in the present case, which was made before that in the Schalicke case, the court said that the case was in no way different, so far as infringement was concerned, from the cases against Perine and Molitor and the case against the Greenway Brewing Company.

In the Schalicke case it was said, in the [467] opinion of this court, in regard to the pavement in the Molitor case: "The defendant's pavement was made by cutting a lower course into sections with a trowel, to a greater or less depth, according to the character of the material, making a joint, and doing the same with an upper course, the upper joint being directly over the lower joint. Into the open joint, in each case, was loosely put some of the partially set material from the top of the laid course, answering the purpose of tar-paper. A blunt and rounded joint-marker, which was said to be $\frac{1}{16}$ or $\frac{1}{8}$ of an inch in depth, was then run over the line of the joints, marking off the block. The pavement was weaker along the line of the joint than in any other place. This was held to be an infringement." It was also there said that, in the Greenway Brewing Company case, "it was held that the 2d claim of the reissue was infringed by a concrete pavement which had an open cut made by a trowel entirely through two courses of material, the line of cut in the upper course being directly over the line of cut in the lower course, and that the interposition of the trowel, though temporary, was an equivalent for the tar-paper, even though the joint was left open after the trowel was removed, and was not made tight."

In the present case, the only pavement for which the defendant was held liable was what was called in his account or statement before the master "concrete flag pavement," the manner of constructing which is thus described by Mr. Perkins, a witness for the plaintiff: "First, joists are placed seven to eight feet apart, in front of the property where the work is to be laid. First, one stone is formed by placing a joist across between the others at right angles, generally at about four feet from the place of beginning. In this space a mortar, composed of sand, gravel and cement, is put and thoroughly tamped, so that the coarse material will be from three to four inches in thickness, leaving about one half inch on top for a mortar composed of sand and cement, which is troweled off and made even with the top surface of the joints. Then the short joist that is put in at right angles, as before described, is taken up and placed about the same distance as before, and again filled in. The finer material in the coarse concrete is generally worked next to [468] the joist, so as to make a good, smooth, strong edge. When the top stuff is put on this last stone, and finished over on top with a trowel, the joint between the two stones being marked on the outer joist, a trowel is drawn through the top stuff, to make a joint straight, to correspond with the joint below." The evidence is satisfactory, that the trowel was used to cut through or into the top layer to an extent sufficient to make such a separation of the top layer into blocks, at a line corresponding with the joint below between the sections of the first layer, as to control the cracking of the top layer, by dividing it substantially into separate blocks. This division depends on the depth of the cut. The defendant contends that the object and effect of the marking with the trowel was only to give to the pavement the appearance of flagging; but the evidence is entirely clear that the cut was made sufficiently deep, in proportion to the thickness of the upper layer, to make such a separation of the upper layer into blocks as would compel any tendency to crack to follow the line of the cut made by the trowel, and not run off into the body of the layer; and that thus the object of Schillinger's invention was attained. The defendent is, by the report of the master and the decree of the circuit court, made liable only for concrete flagging so laid and cut as to produce such result. The defendant was particular to have the cut in the upper layer made with the trowel directly over the line between the two sections of the lower layer, and it is shown that the upper layer of his pavement thus made would come up in separate blocks. He made his lower course of sand, gravel and cement, mixed in the proportions of one part of cement to six or seven of sand and gravel, while he made his upper course of one half sand and one half cement, made plastic with water. The lower course of his flagging was composed of material in which there was only one part of cement or adhesive substance to six or seven parts of nonadhesive substance, and there was but a slight tendency to adhere between the faces of the two sections in the lower course; while as the upper layer was composed one half of adhesive substance, the tendency was for its material to adhere strongly. Therefore, a cut in the upper course, co- [469] incident with the joint below, would permit any action of the settling of the lower course, through frost or upheaval, to extend to the top of the upper course through a joint cut in that course, of sufficient depth to prevent the tendency of the upper course to crack in its body rather than in the line of the cut.

We are, therefore, of opinion that the first claim of the reissue, as it stands after the disclaimer, is infringed, because the defendant's pavement is a concrete pavement, laid in detached blocks or sections, substantially in the manner shown and described in the specification of the reissue, the detached blocks in the upper course being the equivalent of the detached blocks or sections of the Schillinger

pavement; and that the second claim of the reissue is infringed, because the temporary use of the trowel or cutting instrument, to divide the upper course into blocks, is the equivalent of the tar-paper of the Schillinger patent, the cutting making a division which controls the cracking, and facilitates the taking up and relaying of the blocks or sections in the upper course "without disturbing the adjoining sections," and the trowel being interposed to effect its object during the process of forming the pavement on the spot where it is to remain.

The invention of Schillinger was a very valuable one The evidence is that it entirely superseded the prior practice of laying concrete pavements in a continuous, adhering mass.

The defendant introduced in evidence, on the question of novelty, the following patents: English patent to Claridge, No. 7489, of 1837; English patent to D'Harcourt, No. 7991, of 1839; United States patent to Russ, No. 5475, of 1848; English patent to Chesneau, No. 350, of 1852; English patent to Coignet, No. 2659, of 1855; English patent to De la Haichois, No. 771, of 1856; and United States patent to Van Camp, No. 93,142, of July 27, 1869. All of these patents, except the Van Camp patent, were introduced in evidence on the part of the defense in the case against the Greenway Brewing Company, and it was held in that case that none of them anticipated the Schillinger invention. A copy of the record in that case, embracing the pleadings, and the evidence and [470] patents put in by the defendant in it, on the question of novelty, forms part of the record in the present case.

An examinaton of the patents put in evidence by the defendant, in connection with the testimony in regard to them, shows that the Claridge pavement was not a concrete pavement, and was not formed in detachable blocks, but was a continuous asphalt pavement; that the D'Harcourt pavement was not a concrete pavement laid in detached blocks or sections, nor could one section be removed without disturbing adjacent sections; that the Russ patent shows a concrete foundation for a stone pavement, the pavement proper being constructed of granite or syenite placed on top of the concrete foundation, such concrete foundation not being formed in detachable blocks, but only being provided at certain places with removable panels, consisting of frames filled with concrete, to be lifted out to give access to water pipes or for other purposes; that the Chesneau pavement was not a concrete pavement laid in detached sections or blocks, but was a continuous pavement, provided with panels to give access in certain places to gas and water pipes, the panels being made of sections set in frames, which were removably inserted in the surrounding pavement, and there was no arrangement of tar-paper or its equivalent between adjoining blocks of concrete, for the purpose set forth in the Schillinger patent; that the Coignet patent did not show a concrete pavement, made in detachable blocks after the manner of Schillinger's, and built on the ground where it was to remain; that the De la Haichois pavement was not a concrete pavement laid in detachable blocks or sections, or having the arrangement of tar-paper or its equivalent between adjoining blocks of concrete like that of Schillinger; and that the Van Camp patent showed only blocks formed in moulds, and removable from the moulds, or the pavement to be laid cemented in the molds, and it not being stated that the blocks should be formed on the spot where they were to remain, nor that they should be formed of cement and gravel or sand. It further appears that, in the Van Camp patent, when the blocks are made in moulds, they are like bricks, [471] or artificial stones, or wooden blocks, which are prepared and then brought to the place where they are to be laid and put down in the usual manner; and that when the blocks remain in the moulds and are thus laid, they do not present a uniform wearing surface of concrete, or constitute a concrete pavement formed in detachable blocks by joints.

Other testimony as to prior public use was introduced in this case, taken from the record in the case of *Schillinger* v. *Phillip Best Brewing Co.*, in the Circuit Court for the Eastern District of Wisconsin, which testimony was also introduced in the case against the Greenway Brewing Company, having been taken in November, 1882. In the decision in the latter case, it was correctly said of that testimony: "So far as it refers to prior use in Germany, not shown in a patent or printed publication, it was duly objected to in this case and must be excluded. As to the cement malt floor which Row laid in Baltimore twenty-five years ago, he shows that it was not made in sections detachable by free joints. The testimony of Botzler as to a prior malt floor laid by him in Chicago is too indefinite to amount to sufficient evidence to defeat a patent." So far as that testimony related to a pavement used in Germany, it was objected to at the time it was introduced in this case, as incompetent. It was clearly inadmissible under section 4923 of the Revised Statutes, because it did not show anything that had been patented or described in a printed publication.

We do not think that the reissued patent, as it stood after the filing of the disclaimer, was open to the objection that it was not for the same invention as that of the original patent. Whatever there was of objectionable matter inserted in the specification or the first claim of the reissue, when it was granted, was removed by the disclaimer. The re-issue was granted within ten months after the original. The single claim of the original patent was repeated in the reissue as the second claim of the latter; and the first claim of the reissue, as it stood after the disclaimer, did not expand beyond the claim of the original what was claimed in the reissue.

As to the amount of the decree, we think the court properly awarded the sum of 4 cents per square foot as the profits of the defendant, and [472] that it was right to give to the plaintiff the entire profits made by the defendant by the laying by him of his concrete flagging, in view of the testimony in the case. It clearly appears that the defendant's concrete flagging derived its entire value from the use of the plaintiff's invention, and that if it had not been laid in that way it would not have been laid at all.

In *Elizabeth* v. *Nicholson Pavement Co.* 97 U. S. 126, 139 [24:1000,1006], it is said that "When the entire profit of a business or undertaking results from the use of the invention, the pat-

entee will be entitled to recover the entire profits if he elects that remedy." This language was quoted with approval in *Root* v. *Lake Shore & M. S. R. Co.* 105 U. S. 189, 208 [26: 975, 980]. As in the case of the Nicholson patent, so in the case of the Schillinger patent, the pavement was a complete combination in itself, differing from every other pavement, and the profit made by the defendant was a single profit derived from the construction of the pavement as an entirety. *Callaghan* v. *Myers*, 128 U. S. 617, 665, 666 [*ante*, 547, 562].

Within the decision in *Garretson* v. *Clark* 111 U. S. 120 [28: 371], the proof in this case is satisfactory, that the entire value of the defendant's pavement, as a marketable article, was properly and legally attributable to the invention of Schillinger.

The decree of the Circuit Court is affirmed.

---

[527] JOHN HASKELL BUTLER, Admr., ET AL., *Appts.*,
v.
THE BOSTON AND SAVANNAH STEAMSHIP COMPANY.

SAME *v.* SAME.

(See S. C. Reporter's ed. 527-558.)

Limited liability of ship owners—libel for limited liability a bar to other actions—Act of February 28, 1871—extent of the law—effect of state statute—disaster within county limits—liability for death.

1. The law of limited liability of ship owners applies to cases of personal injury and death, as well as to cases of loss of, or injury to, property. It extends to liability for every kind of loss and injury.

2. Proceedings taken by the owner of the vessel, by libel for limited liability, are a bar to actions commenced to recover damages for losses sustained by means of the stranding and sinking of the vessel.

3. The Act of February 28, 1871, to provide for the better security of life on board of steam vessels, does not supersede or displace the proceeding for limited liability, in cases arising under its provisions.

4. The law of limited liability was enacted by Congress as a part of the maritime law of this country, and, in its operation, extends wherever public navigation extends.

5. A statute of a State cannot neutralize or affect the admiralty or maritime jurisdiction or the operation of the maritime law in maritime cases.

6. The Limited Liability Act applies to the present case notwithstanding the disaster happened within the technical limits of a county of Massachusetts, and notwithstanding the liability itself may have arisen from a state law.

7. This court expresses no opinion as to whether a state law can create a liability in a maritime case, within the dominion of admiralty and maritime jurisdiction, where neither the general maritime law nor an Act of Congress has created such a liability.

[Nos. 244, 340.]

Argued April 10, 11, 1889. Decided April 22, 1889.

APPEALS from decrees of the Circuit Court of the United States for the District of Massachusetts, affirming decrees of the District Court, one of them dismissing a libel against a steamship company to recover damages for death, and the other decreeing that the libelant is entitled to the limitation of liability for loss of life and other damage, and that the exceptions of the respondents to the libel be overruled. *Affirmed.*

The facts are stated in the opinion.

Messrs. **Frank Goodwin** and **Eugene P. Carver**, for appellants:

The law regards the rights of passengers and holds the carrier to the highest degree of care possible and requires him to make good all damages suffered through want of that care.

Pa. Co. v. *Roy*, 102 U. S. 451 (26: 141).

The courts of the United States, down to the Act of 1851, did not recognize the rule of the ancient or general maritime law, but refused to adopt it either in admiralty or common law.

Del. Col. v. *Arnold*, 3 U. S. 3 Dall. 333 (1: 624); *The Amiable Nancy*, 1 Paine. 111, 118; *Pope* v. *Nickerson*, 3 Story, 465, 480, 492; *Hale* v. *Washington Ins. Co.* 2 Story, 176; *New Jersey Steam Nav. Co.* v. *Merchants Bank*, 47 U. S. 6 How. 435 (12: 465).

The Limited Liability Act is not to be extended, even in respect to goods, by construction.

Salmon Falls Mfg. Co. v. *The Tangier*, 6 Am. Law Reg. 504, 510; *King* v. *Am. Transp. Co.* 1 Western Law Monthly, 186; *S. C.* 1 Flipp. 1; *The Egypt*, 25 Fed. Rep. 320; *The Mamie*, 5 Fed. Rep. 818; 8 Fed. Rep. 367; 105 U. S. 778 (26: 937); *Gibson* v. *Shufeldt*, 122 U. S. 32, 33 (30: 1085); *Carroll* v. *Staten Island R. Co.* 58 N. Y. 126; *Walker* v. *Western Transp. Co.* 70 U. S. 3 Wall. 153 (18:174); *Haegi* v. *Providence & N. Y. S. S. Co.* 54 How. Pr. 146; *Dougan* v. *Champlain Transp. Co.* 56 N. Y. 6; *Chamberlain* v. *Western Transp. Co.* 44 N. Y. 305; *Wallace* v. *Providence & O. S. S. Co.* 14 Fed. Rep. 56.

The liability of owners is not restricted by the Act of Congress providing for the security of passengers on steamboats. The Act does not take away any common-law liability.

Caldwell v. *New Jersey Steamboat Co.* 47 N. Y. 292; *Swarthout* v. *New Jersey Steamboat Co.* 48 N. Y. 209; *Curran* v. *Cheeseman*, 1 Cinc. Super. Ct. (Ohio) 52; *Carroll* v. *Staten Island R. Co.* 58 N. Y. 141; *Houston & G. Nav. Co.* v. *Dwyer*, 29 Tex. 383; *Re Long Island Transp. Co.* 5 Fed. Rep. 599, 624; *The Alpena*, 8 Fed. Rep. 280; *Rounds* v. *Providence & S. Steamship Co.* 14 R. I. 344; *The Amsterdam*, 23 Fed. Rep. 112; *Briggs* v. *Day*, 21 Fed. Rep. 727, 728, 730, 731; *Craig* v. *Continental Ins. Co.* 26 Fed. Rep. 798; *Ex parte Phœnix Ins. Co.* 118 U. S. 610 (30: 274); *Johnson* v. *Chicago & P. Elevator Co.* 119 U. S. 397 (30: 450); *The Favorite*, 12 Fed. Rep. 213; *Providence & S. Steamship Co.* v. *Clare*, 127 U. S. 45 (32: 199); *Siemen* v. *Sellers*, 123 U. S. 285, 286 (31: 156).

When the meaning is plain, the courts cannot look to the statutes which have been revised to see if Congress erred in that revision.

The Montana, 22 Fed. Rep. 730; *Thommasen* v. *Whitwill*, 12 Fed. Rep. 903; *The Marine City*, 6 Fed. Rep. 413; *McDonald* v. *Hovey*, 110 U. S. 628-630 (28: 272); *Pentlarge* v. *Kirby*, 20 Fed. Rep. 900.

When, in a statute, general words follow particular ones, the rule is to construe them as applicable to subjects *ejusdem generis*.

2 Pars. Cont. 7th ed. 501; *Ala.* v. *Montague*, 117 U. S. 609-611 (29: 1003).

The decree dismissing the petition and answer of Butler is a final decree.

The appellees have separate and distinct decrees in their favor depending on separate and distinct claims.

Davis v. *The Seneca*, Gilpin, 38; *S. C.* but on other points, 3 Wall. Jr. 395; *Westcot* v. *Bradford*, 4 Wash. C. C. 492; *Forgay* v. *Conrad*, 47 U. S. 6 How. 201, 203 *et seq.* (12: 404); *French* v. *Shoemaker*, 79 U. S. 12 Wall. 86, 98 (20:270, 271); *Bronson* v. *La Crosse & N. R. Co.* 67 U. S. 2 Black, 531 (17: 360); *Blossom* v. *Milwaukee & C. R. Co.* 68 U. S. 1 Wall. 657 (17: 674); *Stewart* v. *Dunham*, 115 U. S. 61 (29: 329); *Henderson* v. *Wadsworth*, 115 U. S. 276 (29:379); *Hassall* v. *Wilcox*, 115 U. S. 593 (29:504); *Benjamin* v. *Dubois*, 118 U. S. 48 (30: 52); *Daincse* v. *Kendall*, 119 U. S. 54 (30: 305); *Gibson* v. *Shufeldt*, 122 U. S. 27 (30: 1083); *Ex parte Phœnix Ins. Co.* 117 U. S. 369 (29: 924).

Mr. **Charles Theodore Russell, Jr.,** for appellee:

Under the Limited Liability Act, the limitation is extended to all losses by any act of the master done without the owner's order.

Maclachlan, Shipping, 118, 119; *Norwich & N. Y. Transp. Co.* v. *Wright*, 80 U. S. 13 Wall. 116 (20: 589); *The Epsilon*, 6 Ben. 378; *The Rebecca*, 1 Ware, 188.

Loss of life under the Massachusetts statute cannot affect the right or extent of the limitation of liability provided by the Act of Congress.

Am. Steamboat Co. v. *Chace*, 83 U. S. 16 Wall. 522 (21: 369); *Sherlock* v. *Alling*, 93 U.S. 99 (23: 819); *The Harrisburg*, 119 U. S. 199 (30: 358); *Rounds* v. *Providence & S. Steamship Co.* 14 R. I. 344; *The Epsilon*, 6 Ben. 378; *Re Long Island etc. Transp. Co.* 5 Fed. Rep. 599; *The Alpena*, 8 Fed. Rep. 280; *The Amsterdam*, 23 Fed. Rep. 112; *The City of Columbus*, 22 Fed. Rep. 460.

Insurance for a mortgagee adds nothing to the owner's interest in the vessel.

Jones, Mortg. § 400; *Hazard* v. *Draper*, 7 Allen, 267; *Carter* v. *Rockett*, 8 Paige, 437; *Cromwell* v. *Brooklyn F. Ins. Co.* 44 N. Y. 42; *Nichols* v. *Baxter*, 5 R. I. 491; *Vernon* v. *Smith*, 5 Barn. & Ald. 1; *Providence Co. Bank* v. *Benson*, 24 Pick. 204; *Re Sands Ale Brewing Co.* 3 Biss. 175; *City Sav. Bank* v. *Pa. F. Ins. Co.* 122 Mass. 165; *Williams* v. *Ocean Ins. Co.* 2 Met. 303; *Rider* v. *Ocean Ins. Co.* 20 Pick. 259.

The insurance money cannot be claimed by the mortgagor nor by any creditor of the mortgagor.

May, Ins. §§ 6, 116; *White* v. *Brown*, 2 Cush. 412; *Carpenter* v. *Providence Washington Ins. Co.* 41 U. S. 16 Pet. 495 (10: 1044); *Bank of S. C.* v. *Bicknell*, 1 Cliff. 85; *Hidden* v. *Slater Mut. F. Ins. Co.* 2 Cliff. 266.

The claim of these sufferers by the loss of the steamship is confined to the *res*, or its value.

Spring v. *Haskell*, 14 Gray, 309; *Farnsworth* v. *Boston*, 126 Mass. 1; *Read* v. *Cambridge*, 126 Mass. 427.

[528] *Mr. Justice* **Bradley** delivered the opinion of the court:

These two cases are so intimately connected, both in the proceedings and in the questions arising therein, that it will be most convenient to consider them together. They arose out of the stranding, sinking and total loss of the steamship City of Columbus, on Devil's Bridge, near Gay Head, at the western extremity of Martha's Vineyard, and near the mouth of Vineyard Sound, on the 18th of January, 1884. Most of the passengers and cargo were lost, and amongst the passengers lost was Elizabeth R. Beach, a single woman, of Mansfield, in the State of Connecticut. The appellants [529] represent her, Nathaniel Beach being appointed administrator of her estate in Connecticut, Butler being appointed ancillary administrator in Massachusetts, and the other two appellants being, one an aunt, and the other a niece of the deceased, dependent on her for support. The appellees, The Boston and Savannah Steamship Company, were the owners of the ship.

Soon after the disaster occurred, and early in February, 1884, one Brown and one Vance commenced each of them an action at law against the steamship company, in the Superior Court of the County of Suffolk, in Massachusetts, to recover damages for losses alleged to have been sustained by them by means of the stranding and sinking of the vessel. Thereupon the steamship company, on the 18th of February, 1884, in order to obtain the benefit of the law of limited liability, filed a libel in the District Court of the United States for the District of Massachusetts, against the said Brown and Vance, and against all other persons who had suffered loss or damage by said disaster. This is one of the cases now before us on appeal. The libel was in the usual form of libels in causes of limited liability. It set forth the ownership of the vessel, the business in which she was employed, namely, as a passenger and freight steamship between Boston and Savannah, her sea-worthiness, her being well and thoroughly officered and manned and furnished and equipped as the law required. It stated that on the 17th of January, 1884, she left Boston on a voyage to Savannah, having on board about 83 passengers and considerable merchandise, a list of the former, as far as known, and a schedule of the latter, being annexed to the libel. It stated that whilst prosecuting said voyage, and while on the high seas, to wit, in or near Vineyard Sound, the steamship struck on the rocks near and off the shore at Gay Head, in Martha's Vineyard, in the district of Massachusetts, about half past three in the morning of January 18th, 1884, and in a very few minutes thereafter heeled over, filled with water, and sunk, becoming a total wreck and loss; that most of the passengers and crew, about 100 in number, were drowned and lost, those surviving claiming to have suffered great injury, and that all the property [530] and effects of the passengers and crew, and all the cargo on board (except a small part, salved in a damaged condition, and of little value), together with said steamship, its machinery, tackle, apparel and furniture, were destroyed and lost.

The libel propounded other articles, as follows, to wit:

"*Fifth.* All said great loss of life, injury and damage to persons on board, and loss of and damage to property, were occasioned and incurred without the privity or knowledge of the libelant, the owner of said steamship.

Sixth. The libelant further alleges that, as

it is informed and believes, certain persons or corporations, owners or insurers of property on board, and lost or damaged by and at the loss of said steamship as aforesaid; certain other persons, who claim to have been on board said steamship at the time of the loss aforesaid, and to have suffered in consequence thereof injuries and damage to their persons and property; and still other persons, claiming to represent persons drowned and lost in said disaster, and claiming to be entitled to recover and receive large sums of money on account of the death of and injury to said persons so represented by them—all make, or may hereafter make, claim that the striking upon the rocks, and sinking and wreck of said steamship, and the loss of life, damage to persons and property aforesaid, were occasioned and incurred from the fault and neglect of the libelant, or its officers and agents, and that the libelant is liable and responsible to pay to them the loss and damages arising as aforesaid; all of which claims and allegations the libelant denies, and, on the contrary, it alleges that all such losses and damages were occasioned or incurred without its neglect, fault, privity or knowledge, and, as it is informed and believes, without the neglect or fault of its officers or agents, or any of them."

"*Eighth.* The losses and damage to persons and property incurred and occasioned by the said stranding, sinking, and loss of said steamship, and the alleged claims and liabilities made against the libelant, by reason thereof, greatly exceed the amount or value of the interest of the libelant, as owner, in said steamship, her machinery, tackle, apparel and furniture, immediately after said loss, and in her freight then pending. Upon and after the happening of said loss, said steamship, her machinery, tackle, apparel and furniture, became a wreck and total loss, and, the libelant is informed and believes, were then practically worthless, and the libelant's interest therein became and was of little or no value. The gross freight then pending on the voyage of said steamship to Savannah was of the value of about $1,000.

"*Ninth.* The libelant, while not admitting but denying that it is under any liablity for the acts, losses and damages aforesaid, and desiring and claiming the right in this court to contest any such liability of itself or of said steamship, claims and is entitled to have limited its liability, as owner therefor (if any such liability shall hereafter be found to exist), to the amount or value of its interest, as owner, in such steamship after said loss, and her freight then pending.

"*Tenth.* Said steamship, in her damaged and wrecked condition, now lies sunken near the shore at Gay Head, Martha's Vineyard, within this district, and within the jurisdiction and process of this honorable court."

The libelant thereupon claimed and petitioned that, in case it should be found that there was any liability for the acts, losses, and damages aforesaid, upon said steamship "City of Columbus," or the libelant as owner thereof (which liability the libelant did not admit, but expressly and wholly denied, and desired in that court to contest), such liability should in no event exceed the amount or value of the interest of the libelant, as owner, in said steamship and her freight then pending, as by law provided; and to that end the libelant prayed that all claims for loss, damage, or injury to persons or property by reason of the premises might be heard and determined in that court, and apportioned according to law, and that due appraisement might be ordered and made of the ship, her machinery and furniture, and of her pending freight at the time of the loss, offering to pay the appraised value into court or give proper stipulation therefor, and that monition in due form should issue against said Brown and Vance and any and all persons claiming damages by reason of the premises, citing them to appear, etc., and that all actions and suits concerning the matters set forth might be restrained and enjoined.

Upon the filing of this libel a monition was duly issued and published, and an injunction against actions and suits was granted, issued and published. The monition was returnable to the first day of July, 1884.

Notwithstanding these proceedings the appellants, on the 27th of September, 1884, filed a libel against the steamship company, in the same District Court for the District of Massachusetts, to recover damages for the death of said Elizabeth R. Beach. This is the other suit now before us on appeal. After stating the engagement of passage by Miss Beach on the steamship from Boston to Savannah, the character of the vessel as a coastwise sea-going steamship in the coasting trade, under enrollment and license, and the circumstances of the stranding and loss, and the drowning of Miss Beach, the libel of the appellants averred and charged that the disaster was caused by negligence on the part of those employed by the steamship company in managing the ship, and by inefficiency in the discipline of the officers and crew, and that no proper measures were taken to save the passengers. The libel further alleged that at the time of the disaster the second mate, one Harding, was in charge of the ship, and was not a pilot for those waters; that it was a part of his duty to take charge of the ship alternately with the first mate; that it was an omission of duty on the part of the owner to intrust to the second mate the charge of the ship without the aid of the special pilot; and that no pilot was on duty on the ship at the time of the accident. The libel further alleged that "There was not proper apparatus on the vessel for launching the boats;" "that the ship was not properly constructed in respect to bulkheads and otherwise;" and that there was unfitness, gross negligence or carelessness on the part of the servants and agents of the respondents engaged in navigating the ship, and in not taking proper measures to save the passengers, and as displayed in the inefficiency of the discipline of the officers and crew of the vessel; and that in respect to these matters there was negligence and carelessness on the part of the owner.

The libel further set out a statute of Massachusetts of the following purport, to wit:

"If the life of a passenger is lost, by reason of the negligence or carelessness of the proprietor or proprietors of a steamboat, or stage coach, or of common carriers of passengers, or by the unfitness or gross negligence or carelessness of their servants or agents, such proprietor or proprietors and common carriers shall

be liable in damages not exceeding five thousand, nor less than five hundred dollars, to be assessed with reference to the degree of culpability of the proprietor or proprietors or common carriers liable, or of their servants or agents, and recovered in an action of tort, commenced within one year from the injury causing the death, by the executor or administrator of the deceased person, for the use of the widow and children of the deceased, in equal moieties, or, if there are no children, to the use of the widow, or, if no widow, to the use of the next of kin:"

The libel further alleged that after the vessel struck, said Elizabeth R. Beach suffered great mental and bodily pain upon the vessel and was afterwards washed into the sea and drowned; that the value of her clothing and baggage lost was $150; and that by virtue of the premises and under the general admiralty jurisdiction of the United States the libelants were entitled to recover $50,000, and by virtue of the statute of Massachusetts, $5,000.

The steamship company, thereupon, on the 10th day of October, 1884, filed an exception and plea to this libel, setting up in bar the record and proceedings of the cause of limited liability previously instituted by them in the same district court, and then pending.

To meet this exception, the appellants, on the 16th of December, 1884, filed an amendment to their libel, by way of replication, in which they claimed the benefit of the Steamboat Inspection Act, passed February 28, 1871 (Title LII of the Revised Statutes U. S.), which makes many regulations respecting the steam machinery and apparatus of steam vessels of the United States in the merchant service, navigating the waters of the United States [534] and respecting their construction and manner of lading and accommodating passengers and merchandise, and the officers and crews with which they are to be manned, and requires sea-going steamers in the coasting trade when under way and not on the high seas, to be under the control and direction of pilots licensed by the steamboat inspectors, imposes penalties for loss of life through negligence and inattention, and gives damages to the full amount against the vessel and her master and owner to persons injured, if the injury happens through any neglect or failure to comply with the provisions of the law, or through any known defects or imperfections of the steaming apparatus, or of the hull. (Rev. Stat. Title LII, *passim*, §§ 4401, 4498.) The appellants averred that The City of Columbus was subject to this law, and when the catastrophe happened was within the waters of the State of Massachusetts, and not upon the high seas, and not under the control of a licensed pilot. They further averred that there was connivance, misconduct, or violation of law on the part of the owner in not providing or procuring the vessel to be under the control and direction of a licensed pilot, and that there was misconduct, negligence, and inattention to duty on the part of the captain, second mate, or other persons employed on the vessel, by which connivance, misconduct, and negligence the life of said Elizabeth R. Beach was destroyed.

On the same day, the 16th of December, 1884, the appellants appeared to the libel of the steamship company in the cause of limited liability, and filed a pleading which they entitled an Answer, Petition and Exceptions, and by which they set up substantially the same matter as had been averred in their libel and the amendment thereto; and in addition, they alleged that at the time of the disaster the steamer and her freight were substantially insured, and that the owners had received, or were entitled to receive, a large amount of money for said insurance, and would thereby be substantially indemnified for the loss of vessel and freight.

Afterwards, on the 19th of January, 1885, the appellants moved in the same cause that the steamship company be ordered to pay into court the said insurance money. To this motion the company filed a written reply in [535] which they set up the fact that in pursuance of an order of the court they had entered into stipulation to pay into court the amount of the appraised value of their interest in the ship and freight. They further averred that, in pursuance of a covenant made at the time of their purchasing the said steamship, in the mortgage given for the purchase money, all the insurance procured by them had been assigned and made payable to the vendors and mortgagees, for whose benefit and security the policies were kept on foot; and said parties had collected the insurance money, and applied it in part payment of the mortgage notes, and the libelants, The Boston and Savannah Steamship Company, had not collected or received any part of it. To this answer the appellants filed an exception in the nature of a demurrer.

Upon these pleadings the parties agreed upon a statement of facts, which, after stating the titles of the two causes, was as follows, to wit:

"Statement of agreed facts.

"In the above entitled causes the following facts are agreed by the Boston and Savannah Steamship Company and John Haskell Butler, administrator, *et al.*, party excepting to said libel of said company:

"*First.* All the allegations contained in the eleventh, twelfth, thirteenth, fourteenth, nineteenth, twenty-third, and twenty-fourth articles of the answer, petition and exceptions of said John Haskell Butler, administrator, *et al.*, in said suit are true.

"*Second.* Except as relieved or affected by the Limited Liability Act of 1851 (U. S. Rev. Stats. §§ 4283–5) and the Rules of the United States Supreme Court thereunder, the libelant, ship owner, is liable for all loss and damage caused by the stranding of said steamship 'City of Columbus.'

"*Third.* In respect to the cause of the disaster alleged, the respondents claim, in addition to the concession by libelant, the B. and S. Steamship Company, of negligence on the part of their agents and servants, as above agreed, that at the time of disaster the second mate was in charge of the ship; that he was not a pilot for the waters upon which the ship was then going, and was not licensed as a pilot by [536] the inspectors of steamboats; and that no pilot was on duty on said ship at the time of the disaster; and, further, that the disaster was owing to the unfitness, gross negligence, or carelessness of the servants or agents of the libelant, who

were engaged in navigating the ship at the time of the disaster, so that the case was within section 6 of chapter 73 of the Public Statutes of Massachusetts. The libelant denies all these allegations, and claims that they are immaterial to the issues of the cause, if true; and that the captain was in charge of the ship at the time of the disaster.

"*Fourth.* Said loss and damage were without the privity and knowledge of the libelant, The Boston and Savannah Steamship Company, the sole owner of said steamship.

"*Fifth.* Said steamship was a coastwise, seagoing vessel, under enrolment, and was, at and before the time of loss, subject to all the laws and rules of navigation applicable to such vessels; and at the time of loss was on a voyage from Boston to Savannah, Georgia, and proceeding through Vineyard Sound, stranding on Devil's Bridge, off and near Gay Head, Martha's Vineyard. And to this extent the respondents, Butler *et al.*, qualify any admission in their answer to the third article of the libel of the company; and the company qualify any averment pertinent thereto in said article.

"*Sixth.* After the filing of the libel or petition in this cause, the court caused due appraisement to be had of the amount or value of the interest of the libelant, as owner, in such ship and her freight for the voyage, and thereupon made an order for the giving of a stipulation, with sureties for the payment thereof, into court, whenever the same shall be ordered; and upon due compliance with this order the court issued a monition, February 28, 1884, against all persons claiming damages for any such loss, embezzlement, destruction, damage, or injury, citing them to appear before the said court and make due proof of their respective claims at or before July 1, 1884, and public notice of such monition was given as required; and thereafter, on the application of said owner, the court made an order to restrain the further prosecution of all and any suit or suits against said owner in respect of any such claim or [537] claims, all as provided in the admiralty rules of the United States Supreme Court.

"*Seventh.* The Boston and Savanah Steamship Company is a corporation organized under the laws of the State of Massachusetts, and is located at Boston, in said State."

The following additional statement was agreed to in the action of the appellants, to wit:

"1. Except as relieved or affected by the Limited Liability Act of 1851 (U. S. Rev. Stat. §§ 4283-5), and the Rules of the United States Supreme Court thereunder, the respondent, ship owner, is liable for all loss and damage caused by the stranding of said steamship 'City of Columbus.'

"2. The respondent claims that the captain was in charge of the ship at the time of the disaster.

"3. Said loss and damage were without the privity and knowledge of the respondent, the Boston and Savanah Steamship Company, the sole owner of said steamship.

"4. Said steamship was a coastwise, seagoing vessel, under enrolment, and was, at and before the time of loss, subject to all the laws and rules of navigation applicable to such vessels; and at the time of loss was on a voyage from Boston to Savannah, Georgia, and proceeding through Vineyard Sound, stranding on Devil's Bridge, off and near Gay Head, Martha's Vineyard."

The two causes were argued together upon the pleadings and these statements of fact; and on the 10th of April, 1885, the following decrees were made, to wit:

In the suit of the appellants the following decree was made:

"This cause was heard upon libel and respondent's exceptions thereto, and upon agreed facts; and it appearing to the court that the record alleged in said exceptions exists, it is thereupon ordered, adjudged and decreed that the exceptions be sustained, and the libel dismissed with costs."

In the limited liability cause the following decree was made:

"It is found and decreed by the court that the libelant is entitled to the limitation of liability for loss of life, and other damage, as claimed in said libel; and that evidence tending to establish the facts, claimed by the respondents in clause three of the agreed facts on file, is [538] immaterial, and therefore inadmissible; and that the allegations in the libelant's answer to respondents' motion that insurance money be paid into court are true; and it is thereupon ordered, adjuged and decreed by the court that the said respondents' exceptions to the libelants' answer to said respondents' motion that insurance money be paid into court, be overruled, and their said motion denied; and that the exceptions of said respondents to the libel be overruled, and their petition be dismissed."

These decrees were affirmed by the circuit court, and from the decree of the latter court the present appeal was taken.

We will first consider the principal point taken in the cause of damage, instituted by the appellants, to which the owners of the steamship pleaded the pendency of the proceedings in the cause of limited liability; and will then discuss the questions presented in both causes, and those which are peculiar to the cause last named.

In the former cause the principal point raised [549] was, that the law of limited liability does not apply to personal injuries, and hence that the appellants were not bound to litigate their claim in the limited liability cause; but had a right to file a separate and independent libel. The appellants in their brief say:

"The single question thus presented is, whether the Act limiting the liability of ship owners applies to damages for personal injury and damages for loss of life, and thus deprives those entitled to damages of the right to entertain suit for recovery, provided that the ship owner has taken appropriate proceedings by libel or petition to limit his liability; in other words, whether the said Act extends to all damages for personal injury, and damages for loss of life."

It is virtually conceded that if the Limited Liability Act applies to damages for personal injury, and damages for loss of life, the proceedings taken by the steamship company by their libel for limited liability were a bar to the appellants' action; and that the controversy between the parties should have been settled in

that cause. We shall, in the first place, therefore, examine that question.

If we look at the ground of the law of limited responsibility of ship owners, we shall have no difficulty in reaching the conclusion that it covers the case of injuries to the person as well as that of injuries to goods and merchandise. That ground is, that for the encouragement of ship building and the employment of ships in commerce, the owners shall not be liable beyond their interest in the ship and freight for the acts of the master or crew done without their privity or knowledge. It extends to liability for every kind of loss, damage and injury. This is the language of the maritime law, and it is the language of our statute which virtually adopts that law. The statute declares that "The liability of the owner of any vessel, for any embezzlement, loss or destruction, by any person, of any property, goods or merchandise, shipped or put on board of such vessel, or for any loss, damage or injury by collision, or for any act, matter, or thing, [loss,] damage or forfeiture, done, occasioned or incurred, without the privity or [550] knowledge of such owner, or owners, shall in no case exceed the amount or value of the interest of such owner in such vessel and her freight then pending." (Rev. Stat. § 4283. The word "loss" in the Statute of 1851 is printed "lost" in the Revised Statutes, evidently by mistake.) This is the fundamental section of the law. On this section the whole provision turns. And nothing can be more general or broad than its terms. The "*liability* . . . shall in no case exceed," etc. It is the liability not only for loss of goods, but for any injury by collision, or for any act, matter, loss, damage or forfeiture whatever, done or incurred.

Various attempts have been made to narrow the objects of the statute, but without avail. It was first contended that it did not apply to collisions. This pretense was disallowed by the decision in *Norwich Co.* v. *Wright*, 80 U. S. 13 Wall. 104 [20:585]. Next it was insisted that it did not extend to cases of loss by fire. This point was overruled in the case of *Providence & N. Y. S. S. Co.* v. *Hill Mfg. Co.* 109 U. S. 578 [27:1038]. Now it is contended that it does not extend to personal injuries as well as to injuries to property. If this position can be maintained the value of the Act, as an encouragement to engage in the shipping business, will be very essentially impaired. The carriage of passengers in connection with merchandise is so common on the great highway between the old and new continents at the present day, that a law of limited liability, which should protect ship owners in regard to injuries to goods and not in regard to injuries to passengers, would be of very little service in cases which would call for its application.

The section of the law which follows the main section in the original Act, namely, sect. 4 of the Act of 1851 (constituting the two sections of 4284 and 4285 of the Revised Statutes), has been referred to for the purpose of showing that the Legislature had in view injuries to property only. That section provides that if there are several owners of merchandise damaged or lost on the voyage, and the value of the ship and freight is not sufficient to pay them all, the proceeds shall be divided *pro rata* between them, and gives to either party the right to take the proper proceedings in court [551] to procure such distribution to be made. This section is an appendix to the principal section which limits the liability, and is added to it for the purpose of enabling the parties interested to carry out and secure the objects of the statute in the most equitable manner. It has respect to the legal proceedings to be had for carrying the Act into effect. It prescribes the rule, namely, *pro rata* distribution. Mention is only made, it is true, of owners of property lost or injured; but surely that cannot have the effect of doing away with the broad and general terms of the principal enactment, stated with such precision and absence of reserve. It is more reasonable to interpret the fourth section as merely instancing the owners of lost property for the purpose of illustrating how the proceeds of the ship and freight are to be distributed, in case of there being insufficient to pay all parties sustaining loss. The observations of *Chief Justice* Durfee, in delivering the opinion of the Supreme Court of Rhode Island, in the case of *Rounds* v. *Providence & S. S. S. Co.* 14 R. I. 344, seem to us very sensible and to the point. That was a case of injury to the person. The Chief Justice says: "There would be no doubt upon this point were it not for the next two sections, which make provision for the procedure for giving effect to the limitation. These sections, if we look only to the letter, apply only to injuries and losses of property. The question is, therefore, whether we shall by construction bring the three sections into correspondence by confining the scope of § 4283 to injuries and losses of property, or by enlarging the scope of the two other sections so as to include injuries to the person. We think it is more reasonable to suppose that the designation of losses and injuries in §§ 4284 and 4285 is imperfect, a part being mentioned representatively for the whole, and consequently that those sections were intended to extend to injuries to the person as well as to injuries to property, than it is to suppose that § 4283 was intended to extend only to the latter class of injuries, and was inadvertently couched in words of broader meaning. The probable purpose was to put American ship owners on an equality with foreign ship owners in this regard, and in the great maritime countries of [552] England and France the limitation of liability extends to personal as well as to property injuries and losses."

We may also refer to the opinion of *Judge* Benedict in the case of *The Epsilon*, 6 Ben. 378, as containing a very full and able discussion of the question. It was the first decision made upon this particular subject.

We have no hesitation in saying that the limitation of liability to the value of the ship and freight is general; and that when the proceeds of the latter are insufficient to pay the entire loss, the object of the fourth section of the old law (the 4284th of the Revised Statutes) is mainly to prescribe a *pro rata* distribution amongst the parties who have sustained loss or damage. We think that the law of limited liability applies to cases of personal injury and death as well as to cases of loss of or injury to property.

This conclusion is decisive of the controversy arising on the libel of the appellants. For if

the law applies to the case of personal injuries, it was then the duty of the libelants to have appeared in the cause of limited liability instituted by the owners of the vessel, and to have contested there the question whether, in the particular case, the owners were or were not entitled to the benefit of the law. Had the action of the appellants been first commenced, it would have been suspended by the institution of the limited liability proceedings; and the very object of those proceedings was, not only to stop the prosecution of actions already commenced, but to prevent other suits from being brought. Allegations that the owners themselves were in fault cannot affect the jurisdiction of the court to entertain a cause of limited liability, for that is one of the principal issues to be tried in such a cause. The beneficent object of the law in enabling the ship owner to bring all parties into concourse who have claims arising out of the disaster or loss, and thus to prevent a multiplicity of actions, and to adjust the liability to the value of the ship and freight, has been commented on in several cases that have come before this court, notably in the cases of *Norwich Co.* v. *Wright*, 80 U. S. 13 Wall. 104 [20: 585]; and *Providence & N. Y. S. S. Co.* v. *Hill Mfg. Co.* 109 U. S. 578 [27: 1038]. It is unnecessary to enter again upon the discussion here.

[553] It is contended, however, that the Act of February 28, 1871, entitled "An Act to Provide for the Better Security of Life on Board of Vessels Propelled in Whole or in Part by Steam, and for Other Purposes" (16 Stat. at L. 440), supersedes or displaces the proceeding for limited liability in cases arising under its provisions. We do not see the necessity of drawing any such conclusion. The Act itself contains no provision of the kind. It requires certain precautions to be taken by owners of coasting steam-vessels and those engaged in navigating them to avoid as far as possible danger to the lives of passengers. Amongst other things, by the 51st section of the Act (Rev. Stat. § 4401), it is provided that all coastwise sea-going steam-vessels "shall, when under way, except on the high seas, be under the control and direction of pilots licensed by the inspectors of steamboats." By the 43d section (Rev. Stat. § 4493) it is declared that whenever damage is sustained by a passenger or his baggage, the master and owner, or either of them, and the vessel shall be liable to the full amount of damage if it happens through any neglect or failure to comply with the provisions of the Act, or through known defects, etc. This is only declaring in the particular case, what is true in all, that if the injury or loss occurs through the fault of the owner, he will be personally liable, and cannot have the benefit of limited liability. But it does not alter the course of proceeding if the claim of limited liability is set up by the owner. If, in those proceedings, it should appear that the disaster did happen with his privity or knowledge, or, perhaps, if it should appear that the requirements of the steamboat inspection law were not complied with by him, he would not obtain a decree for limited liability; that is all. We say "perhaps," for it has never yet been decided, at least by this court, that the owner cannot claim the benefit of limited liability when a disaster happens to a coastwise steamer without his fault, privity, or knowledge, even though some of the requirements of the Steamboat Inspection Law may not have been complied with. The Act of Congress passed June 26, 1884, entitled "An Act to Remove Certain Burdens on the American Merchant Marine," etc. (23 Stat. at L. 53), has a section (§ 18) which seems to have been intended as explanatory of the intent of Congress in this class of legislation. [554] It declares that the individual liability of a ship owner shall be limited to the proportion of any or all debts and liabilities that his individual share of the vessel bears to the whole; and the aggregate liabilities of all the owners of a vessel on account of the same shall not exceed the value of such vessel and freight pending. The language is somewhat vague, it is true; but it is possible that it was intended to remove all doubts of the application of the limited liability law to all cases of loss and injury caused without the privity or knowledge of the owner. But it is unnecessary to decide this point in the present case. The pendency of the proceedings in the limited liability cause was a sufficient answer to the libel of the appellants.

The question then arises whether the defense made by the appellants in the cause of limited liability instituted by the owners of the steamship is a good defense as set forth in the pleadings and the agreed statement of facts. The main allegation relied on by the appellants to bring the case within the Steamboat Inspection Law is, that the second mate was in charge of the vessel at the time of the accident, and that he was not a licensed pilot. The libelant owners deny this, and claim that it is immaterial if true. There is no proof on the subject. But suppose it were admitted to be true, how could the owners have prevented the second mate from being in charge? By virtue of his office and the rules of maritime law, the captain or master has charge of the ship and of the selection and employment of the crew; and it was his duty, and not that of the owners, to see that a competent and duly qualified officer was in actual charge of the steamer when not on the high seas. It is not alleged that the captain himself and the first mate were not regularly licensed pilots. They usually are such on all sea-going steamers; and in the absence of any allegation to the contrary, it will be presumed that they were so licensed.

The other allegations, "that there was not proper apparatus on the vessel for launching the boats," and "that the ship was not properly constructed in respect to her bulkheads and otherwise," are too vague and indefinite to form [555] the basis of a judgment. Besides, these allegations are denied, and no proof was offered on the subject.

The several allegations that the disaster was owing to the unfitness, gross negligence, or carelessness of the servants or agents of the steamship company, who were engaged in navigating the ship at the time of the disaster, which allegations were made for the purpose of showing that the case came within the Massachusetts statute, were also denied, and not sustained by any proof. The bearing and effect of that law, however, are proper to be more fully considered.

We have decided in the case of *The Harris-*

burg, 119 U. S. 199 [30:358], that no damages can be recovered by a suit in admiralty for the death of a human being on the high seas or on waters navigable from the seas, caused by negligence, in the absence of an Act of Congress, or a statute of a State, giving a right of action therefor. The maritime law, of this country at least, gives no such right. We have thus far assumed that such damages may be recovered under the statute of Massachusetts in a case arising in the place where the stranding of The City of Columbus took place, within a few rods of the shore of one of the counties of that Commonwealth; and have also assumed that the law of limited liability is applicable to that place. Of the latter proposition we entertain no doubt. The law of limited liability, as we have frequently had occasion to assert, was enacted by Congress as a part of the maritime law of this country, and therefore it is coextensive, in its operation, with the whole territorial domain of that law. *Norwich & N. Y. Transp. Co.* v. *Wright*, 80 U. S. 13 Wall. 104, 127 [20:585, 593]; *The Lottawanna*, 88 U. S. 21 Wall. 558, 577 [22:654, 662]; *The Scotland*, 105 U. S. 24, 29, 31 [26:1001, 1003]; *Providence & N. Y. S. S. Co.* v. *Hill Mfg. Co.* 109 U. S. 578, 593 [27:1038, 1044]. In *The Lottawanna* we said; "It cannot be supposed that the framers of the Constitution contemplated that the law should forever remain unalterable. Congress undoubtedly has authority under the commercial power if no other, to introduce such changes as are likely to be needed." p. 577 [663]. Again, on page 575 [662], speaking of the maritime jurisdiction referred to in the Constitution, and the system of law to be administered thereby, [556] it was said: "The Constitution must have referred to a system of law coextensive with, and operating uniformly in, the whole country. It certainly could not have been the intention to place the rules and limits of maritime law under the disposal and regulation of the several States, as that would have defeated the uniformity and consistency at which the Constitution aimed on all subjects of a commercial character affecting the intercourse of the States with each other or with foreign States." In *The Scotland* this language was used: "But it is enough to say that the rule of limited responsibility is now our maritime rule. It is the rule by which through the Act of Congress, we have announced that we propose to administer justice in maritime cases." p. 31 [1003]. Again, in the same case, p. 29, we said: "But, whilst the rule adopted by Congress is the same as the rule of the general maritime law, its efficacy as a rule depends upon the statute, and not upon any inherent force of the maritime law. As explained in *The Lottawanna*, the maritime law is only so far operative as law in any country as it is adopted by the laws and usages of that country; and this particular rule of the maritime law had never been adopted in this country until it was enacted by statute. Therefore, whilst it is now a part of our maritime law, it is, nevertheless, statute law." And in *Providence & N. Y. S. S. Co.* v. *Hill Mfg. Co.*, it was said: "The rule of limited liability prescribed by the Act of 1851 is nothing more than the old maritime rule, administered in courts of admiralty in all countries except England, from time immemorial; and if this were not so, the subject matter itself is one that belongs to the department of maritime law." p. 593 [1044].

These quotations are believed to express the general, if not unanimous, views of the members of this court for nearly twenty years past; and they leave us in no doubt that, whilst the general maritime law, with slight modifications, is accepted as law in this country, it is subject to such amendments as Congress may see fit to adopt. One of the modifications of the maritime law, as received here, was a rejection of the law of limited liability. We have rectified that. Congress has restored that article to our Maritime Code. We cannot doubt its power to do this. As the Constitution extends the judicial power of the United States to "all cases of admiralty and maritime jurisdiction," and as this jurisdiction is held to be exclusive, the power of legislation on the same subject must necessarily be in the National Legislature, and not in the State Legislatures. It is true, we have held that the boundaries and limits of the admiralty and maritime jurisdiction are matters of judicial cognizance, and cannot be affected or controlled by legislation, whether state or national. *Ch. J.* Taney, in *The St. Lawrence*, 66 U. S. 1 Black, 522, 526, 527 [17:180, 182, 183]; *The Lottawanna*, 88 U. S. 21 Wall. 558, 575, 576 [22:654, 662]. But within these boundaries and limits the law itself is that which has always been received as maritime law in this country, with such amendments and modifications as Congress may from time to time have adopted. [557]

It being clear, then, that the law of limited liability of ship owners is a part of our Maritime Code, the extent of its territorial operation (as before intimated) cannot be doubtful. It is necessarily coextensive with that of the general admiralty and maritime jurisdiction, and that by the settled law of this country extends wherever public navigation extends—on the sea and the great inland lakes, and the navigable waters connecting therewith. *Waring* v. *Clarke*, 46 U. S. 5 How. 441 [12:226]; *The Genesee Chief* v. *Fitzhugh*, 53 U. S. 12 How. 443 [13:1058]; *Jackson* v. *The Magnolia*, 61 U. S. 20 How. 296 [15:909]; *Commercial Transp. Co.* v. *Fitzhugh*, 66 U. S. 1 Black, 574 [17:107].

The present case, therefore, is clearly within the admiralty and maritime jurisdiction. The stranding of the "City of Columbus" took place on Devil's Bridge, on the north side of and near Gay Head, at the west end of Martha's Vineyard, just where Vineyard Sound opens into the main sea. Though within a few rods of the island (which is a county of Massachusetts) and within the jaws of the headland, it was on the navigable waters of the United States; and no state legislation can prevent the full operation of the maritime law on those waters.

It is unnecessary to consider the force and effect of the statute of Massachusetts over the place in question. Whatever force it may have in creating liabilities for acts done there, [558] it cannot neutralize or affect the admiralty or maritime jurisdiction or the operation of the maritime law in maritime cases. Those are matters of national interest. If the territory of the State technically extends a marine league beyond the seashore, that circumstance cannot

circumscribe or abridge the law of the sea. Not only is that law the common right of the people of the United States, but the National Legislature has regulated the subject, in greater or less degree, by the passage of the Navigation Laws, the Steamboat Inspection Laws, the Limited Liability Act, and other laws. We have no hesitation, therefore, in saying that the Limited Liability Act applies to the present case, notwithstanding the disaster happened within the technical limits of a county of Massachusetts, and notwithstanding the liability itself may have arisen from a state law. It might be a much more serious question, whether a state law can have force to create a liability in a maritime case at all, within the dominion of the admiralty and maritime jurisdiction, where neither the general maritime law nor an Act of Congress has created such a liability.. On this subject we prefer not to express an opinion.

The question relating to the insurance money received for the loss of the ship and freight has already been settled by our decision in the case of *The City of Norwich*, 118 U. S. 468 [30:134], and requires no further discussion here. This case is governed by that, so far as the claim to the insurance money is concerned.

The decrees in both cases are affirmed.

---

[472] JESSE B. WILSON, Receiver of SQUIER & Co., *Appt.*,
v.
JAMES B. EDMONDS.

(See S. C. Reporter's ed. 472-482.)

Partnership, when created—interest, rate of.

1. An agreement by which, in consideration of moneys loaned by defendant to a firm of brokers, they were to purchase for him at a discount, a certain class of securities, to be placed in his possession after purchase, and upon their collection, they were to reinvest the avails in like securities, and the profits received by defendant on the purchases were to be credited on the notes of the firm given for the moneys and interest, did not make defendant a member of said firm.

2. It was lawful in the District of Columbia to stipulate in writing for interest at 10 per cent.

[No. 245.]

Argued April 11, 12, 1889. Decided April 22, 1889.

APPEAL from a decree of the Supreme Court of the District of Columbia, dismissing a suit for an account and for the delivery up of securities or the payment of their proceeds. *Affirmed.*

The facts are stated in the opinion.

Messrs. **W. Willoughby** and **Enoch Totten**, for appellant:

An agent cannot stipulate with his employer to receive an interest in the profits, other than gross profits, as a remuneration for his services, without thereby becoming a partner as to third persons.

Leggett v. *Hyde*, 58 N. Y. 272; *Everett* v. *Coe*, 5 Denio, 182; *Pleasants* v. *Fant*, 89 U. S. 22 Wall. 120 (22:782).

Actual participation in the profits as principal creates a partnership as between the parties and third persons.

Berthold v. *Goldsmith*, 65 U. S. 24 How. 542 (16:764); *Parker* v. *Canfield*, 37 Conn. 269; *Wheatcroft* v. *Hickman*, 9 C. B. N. S. (99 Eng. C. L.) 97, 8 H. L. Cas. 268.

Even if these contracts would otherwise leave Edmonds in the position of a lender of money, the interest or profits exacted for the use of his money was so excessive that an equity court will hold him responsible as a partner as to creditors.

Hargrave v. *Conroy*, 19 N. J. Eq. 281; *Sheridan* v. *Medara*, 10 N. J. Eq. 469; *Re Francis*, 2 Sawy. 286.

Mr. **Nathaniel Wilson**, for appellee:

The relations between the defendant and Squier were those of lender and borrower.

Colton v. *Dunham*, 2 Paige, 267; *Cooper* v. *Tappan*, 9 Wis. 362; *Eager* v. *Crawford*, 76 N. Y. 97.

The relation of debtor and creditor were not changed by the subsequent contract respecting the collaterals.

Gregory v. *Morris*, 96 U. S. 619, 623 (24: 740, 741); *Hauselt* v. *Harrison*, 105 U. S. 401, 405 (26: 1075, 1076); *Casey* v. *Cavaroc*, 96 U. S. 467, 480 (24: 779, 785); *Clark* v. *Iselin*, 88 U. S. 21 Wall. 360 (22: 568); *Peugh* v. *Davis*, 96 U. S. 332, 336, 337 (24: 775, 776); *Russell* v. *Southard*, 53 U. S. 12 How. 139, 147 (13: 927).

Any conveyance or acknowledgment of title to secure the payment of money is in equity a mortgage, and the creditor may enforce his debt and ask foreclosure and the debtor may redeem.

Hughes v. *Edwards*, 22 U. S. 9 Wheat. 489 (6: 142); *Babcock* v. *Wyman*, 60 U. S. 19 How. 289 (15: 644); *Shillaber* v. *Robinson*, 97 U. S. 68 (24: 967); *Villa* v. *Rodriguez*, 79 U. S. 12 Wall. 323 (20: 406).

If Squier & Co. were really insolvent, they had the right to exchange values and to give securities for money borrowed, or exchange one voucher for another.

Clark v. *Iselin*, 88 U. S. 21 Wall. 360 (22: 568); *Cook* v. *Tullis*, 85 U. S. 18 Wall. 332 (21: 933).

The receiver takes the estate subject to all equities and incumbrances.

Stewart v. *Platt*, 101 U. S. 731, 738-9 (25: 816, 818); *Donaldson* v. *Farwell*, 93 U. S. 631 (23: 993); *Jerome* v. *McCarter*, 94 U. S. 734 (24: 136); *Yeatman* v. *New Orleans Sav. Inst.* 95 U. S. 764 (24: 589).

To share in the profits of a business or venture as compensation for the use of money or property or for personal services, or partly for each, does not create a partnership.

Seymour v. *Freer*, 75 U. S. 8 Wall. 202, 215 (19: 306, 310); *Beckwith* v. *Talbot*, 95 U. S. 289 (24: 496); *Dale* v. *Pierce*, 85 Pa. 474; *Richardson* v. *Hughitt*, 76 N. Y. 55; *Curry* v. *Fowler*, 87 N.Y. 33, 38; *Cassidy* v. *Hall*, 97 N. Y. 159, 168; *Harvey* v. *Childs*, 28 Ohio St. 319; *Lintner* v. *Millikin*, 47 Ill. 178, 183; *Adams* v. *Funk*, 53 Ill. 219; *Smith* v. *Knight*, 71 Ill. 148; *Boston & C. Smelting Co.* v. *Smith*, 13 R. I. 27; *Williams* v. *Sutter*, 7 Iowa, 436, 445-6; *Ruddick* v. *Otis*, 33 Iowa, 402; *Hart* v. *Kelley*, 83 Pa. 286, 290; *Wells* v. *Babcock*, 56 Mich. 276; *Beecher* v. *Bush*, 45 Mich. 188, 196; *Buzard* v. *First Nat. Bank*, 67 Tex. 84; *Rice* v. *Austin*, 17 Mass. 206; *Meehan* v. *Valentine*, 29 Fed. Rep. 276; *Moore* v. *Walton*, 9 Nat. Bankr. Reg. 403.

Sharing in profits, net or gross, does not constitute a partnership, whether as compensation for money or for personal services or the use of property.

Baxter v. *Rodman*, 3 Pick. 435; *Cutler* v. *Winsor*, 6 Pick. 335; *Denny* v. *Cabot*, 6 Met. 82; *Bradley* v. *White*, 10 Met. 303; *Monroe* v. *Greenhoe*, 54 Mich. 9; *Thayer* v. *Augustine*, 55 Mich. 187; *Colwell* v. *Britton*, 59 Mich. 350; *Vanderburgh* v. *Hull*, 20 Wend. 70; *Reed* v. *Murphy*, 2 Greene (Iowa) 574; *Keiser* v. *State*, 58 Ind. 379; *Boyce* v. *Brady*, 61 Ind. 432; *Eastman* v. *Clark*, 53 N. H. 276; *Kellogg Newspaper Co.* v. *Farrell*, 4 West. Rep. 50, 88 Mo. 594; *Clifton* v. *Howard*, 5 West. Rep. 327, 89 Mo. 192; *Culley* v. *Edwards*, 44 Ark. 424, 428; *Polk* v. *Buchanan*, 5 Sneed, 721; *Dwinel* v. *Stone*, 30 Me. 384; *Millett* v. *Holt*, 60 Me. 169; *Darrow* v. *St. George*, 8 Col. 592; *Parchen* v. *Anderson*, 5 Mont. 438; *Nicholaus* v. *Thielges*, 50 Wis. 491; *Pond* v. *Cummins*, 50 Conn. 372; *Nutting* v. *Colt*, 7 N. J. Eq. 539; *Dils* v. *Bridge*, 23 W. Va. 20; *Setzer* v. *Beale*, 19 W. Va. 274; *Sodiker* v. *Applegate*, 24 W. Va. 412; *Crawford* v. *Austin*, 34 Md. 49; *Sangston* v. *Hack*, 52 Md. 173; *Reddington* v. *Lanahan*, 59 Md. 429; *Heran* v. *Hall*, 1 B. Mon. 159; *Day* v. *Stevens*, 88 N. C. 83, 87; 3 Kent, Com. 24.

The old cases of *Grace* v. *Smith*, 2 W. Bl. 998; *Waugh* v. *Carver*, 2 H. Bl. 247, and others that sanctioned a different doctrine, have been overruled by all the more recent English cases.

Cox v. *Hickman*, 8 H. L. Cas. 268; *Bullen* v. *Sharp*, L. R. 1. C. P. 86, 112, 118; *Holme* v. *Hammond*, L. R. 7 Exch. 218; *Mollwo* v. *Court of Wards*, L. R. 4 Pr. C. 419, 435; *Kilshaw* v. *Jukes*, 3 Best & S. 847; *Easterbrook* v. *Barker*, L. R. 6 C. P. 1, 13; *Shaw* v. *Galt*, Irish L. R. N. S. 16 C. L. 357, 375.

A partnership will not be inferred where there is no provision for a community of losses as well as profits.

Holmes v. *Old Colony R. Co.* 5 Gray, 58; *LaMont* v. *Fullam*, 133 Mass. 583; *Post* v. *Kimberly*, 9 Johns. 470, 504; *Porter* v. *McClure*, 15 Wend. 187; *Holbrook* v. *Oberne*, 56 Iowa, 324; *Beckwith* v. *Talbot*, 2 Colo. 639; *Wheeler* v. *Farmer*, 38 Cal. 203, 213; *Flint* v. *Eureka Marble Co.* 53 Vt. 669; *Gill* v. *Ferris*, 82 Mo. 156; *Chaffraix* v. *Lafitte*, 30 La. Ann. 631, 639; *Chapman* v. *Lipscomb*, 18 S. C. 223; *McCrary* v. *Slaughter*, 58 Ala. 230; *Robinson* v. *Bullock*, 58 Ala. 618; *Howze* v. *Patterson*, 53 Ala. 205; *Fail* v. *McRee*, 36 Ala. 61; *Moore* v. *Smith*, 19 Ala. 774.

The essential conditions of sharing both losses and profits may exist and still there be no partnership, if such was not the intention to be gathered from all the words, acts and purposes of the parties.

Tayloe v. *Bush*, 75 Ala. 433; *Kellogg Newspaper Co.* v. *Farrell*, 4 West. Rep. 50, 88 Mo. 594; *Clifton* v. *Howard*, 5 West. Rep. 327, 89 Mo. 192; *Donnell* v. *Harshe*, 67 Mo. 170; *Musser* v. *Brink*, 68 Mo. 242; *S. C.* 80 Mo. 350; *McDonald* v. *Matney*, 82 Mo. 358, 365; *Burnett* v. *Snyder*, 76 N. Y. 344; *Dwinel* v. *Stone*, 30 Me. 384; *Alfaro* v. *De la Torre*, 24 Week. Rep. 510; *Walker* v. *Hirsch*, L. R. 27 Ch. Div. 460; *Nicholson* v. *Ricketts*, 2 El. & El. 524; *Chaffraix* v. *Lafitte*, 30 La. Ann. 631, 639.

If looking at the whole agreement no partnership was contemplated, none was established.

London Assur. Corp. v. *Drennen*, 116 U. S. 461 (29: 688); *Drennen* v. *London Assur. Corp.* 113 U. S. 51 (28: 919); *Muzzy* v. *Whitney*, 10 Johns. 226; *Beckwith* v. *Talbot*, 2 Colo. 639; *Wheeler* v. *Farmer*, 38 Cal. 203, 213; *St. Louis Ins Co.* v. *St. Louis, V. T. H. & I. R. Co.* 104 U. S. 146, 158 (26: 679, 685).

The creditor of one interested only in the profits cannot take in execution, or in any way claim for debt, the property contributed by another also interested in the profits, for there is no joint proprietorship and no partnership.

Porter v. *McClure*, 15 Wend. 187; *Chase* v. *Barrett*, 4 Paige, 148; *Dale* v. *Pierce*, 85 Pa. 474; *Blanchard* v. *Coolidge*, 22 Pick. 151; *Beckwith* v. *Talbot*, 2 Colo. 639; *Dwinel* v. *Stone*, 30 Maine, 384; *Beckwith* v. *Talbot*, 95 U. S. 289, 293 (24: 496, 498).

Where a partnership exists and is known, but where there is no common purpose to deal on credit, and no debt is contemplated, neither partner is liable for any debt incurred by the other, even though the firm name be used and the money be applied to its use.

Harvey v. *Childs*, 28 Ohio St. 319, 323, 324; *Peterson* v. *Roach*, 32 Ohio St. 374; *Todd* v. *Emly*, 7 Mees. & W. 427, 433, 435.

Even where the common purpose is to deal upon credit and incur debt, one partner cannot involve the other in transactions outside of the actual or apparent business.

Salem Nat. Bank v. *Thomas*, 47 N. Y. 15; *Union Nat. Bank* v. *Underhill*, 3 Cent. Rep. 318, 102 N. Y. 336; *Morgan* v. *Pierce*, 59 Miss. 210; *Pickels* v. *McPherson*, 59 Miss. 216; *Cadwallader* v. *Kroesen*, 22 Md. 200; *Woodward* v. *Winship*, 12 Pick. 430; *Cocke* v. *Mobile Branch Bank*, 3 Ala. 175; *Hogan* v. *Reynolds*, 8 Ala. 59; *Norton* v. *Thatcher*, 8 Neb. 186.

Mr. Justice **Blatchford** delivered the opinion of the court: [474]

On the 7th of June, 1884, Josiah H. Squier, of the City of Washington, doing business there as a banker and broker, under the name of J. H. Squier & Co., being indebted in a large amount, made an assignment of all his property to Jay B. Smith, for the benefit of his creditors. Afterwards, in the same month, Theron C. Crawford, a creditor of J. H. Squier & Co., brought a suit in equity, in the Supreme Court of the District of Columbia, against Squier and Smith, to remove Smith from his position as assignee, and to have the estate settled. An order was made in that suit removing Smith and appointing Jesse B. Wilson receiver of the estate, for the purpose of administering its assets under the direction of the court. Squier died in September, 1884.

After the assignment to Smith and before the appointment of Wilson as receiver, James B. Edmonds filed in the Crawford suit a petition claiming that he was the owner of certain securities which were in a safe belonging to him [475] in the office of the firm; and, by an order made in the cause, he was allowed to take possession of those securities, giving bond for the same. Thereupon, Wilson, as receiver, filed a bill in equity, in the Supreme Court of the District of Columbia, against Edmonds. The bill alleged that Edmonds was not the owner of the securi-

ties; that he had been interested in business with Squier & Co. for a number of years; that the relations between Edmonds and Squier were defined by a written agreement, which in effect made Edmonds a partner with Squier in the business, down to the time of said assignment; that, in respect to two particular notes made by Squier & Co., and held by Edmonds, dated August 1, 1883, one for $40,000 and the other for $4,000, Squier & Co. did not owe to Edmonds the moneys named in them; that, during all the time mentioned, Edmonds had been drawing out from the firm large sums of money, as interest upon moneys which he claimed to have advanced or paid to the firm; that such payments of interest had been largely in excess of that allowed by law, in many instances as great as 1½ per cent per month; that such sums so paid as interest had been drawn from deposits made with Squier & Co. by persons who deposited their money with that firm and were still its creditors; and that Edmonds ought to refund the money so received by him as unlawful interest, if it should appear that he was not liable, as a partner with Squier, to pay all the debts of the firm.

The bill prayed that Edmonds might set forth in his answer when he first had any business relations with Squier, what they were, and how long they continued; that he might state what was the consideration for the two notes, and when it arose; and that he might set forth any written contract between him and Squier, in relation to any business transaction between them, and when and how he became possessed of the securities referred to, and the particulars of the payments of money by Squier & Co., or Squier, to him, both as principal and interest, and what moneys he had loaned or advanced to Squier & Co., for the purpose of buying or speculating in the purchase of vouchers of army [476] or navy officers, and other securities, and the dates and amounts of all notes given to him by Squier & Co., and how much he had received in payment on said notes for principal, and how much for interest, and, if any such notes were given, when they were surrendered, and for what purpose and for what consideration.

The bill further prayed that the court would direct the said securities or their proceeds to be delivered or paid by Edmonds to the plaintiff, for the benefit of the creditors of Squier & Co., as having been the property of Squier & Co., which passed under said assignment; that, if it should appear that Edmonds was not a partner and as such liable to pay the debts of the firm, then a decree might be made against Edmonds for so much as had been paid to him by Squier & Co. as illegal interest upon money advanced or lent by him to Squier & Co.; and that an account might be taken between him and Squier & Co., to ascertain the true indebtedness, if any, of the firm to him.

The defendant put in an answer to the bill, claiming to be the owner of the securities in question, and stating that their total amount was about $28,443; that they consisted mostly of pay vouchers of the United States officers, which by custom had become a sort of commercial paper, having a market value; that a few of them were indorsed payable to Squier & Co., but all of them had been delivered to the defendant by Squier & Co. for a valuable consideration equal to their par value, and upon the promise by Squier & Co., that they would redeem the same or collect the money thereon for the defendant, or do what might be necessary to enable him to receive the money thereon; that, since the order of the court allowing him to take them, he had found about $9,000 of them to be of such doubtful value that he had, under an order of the court, tendered them to the receiver; and that of the residue (less than $20,000) some were of doubtful value. The answer denied that he had been interested in the business of Squier & Co. except as a creditor, and that he had ever been a partner in Squier & Co. or with Squier. He set forth his relations with Squier substantially as follows:

Early in April, 1879, Squier informed the defendant that the firm of J. H. Squier & Co., which was constituted of Squier alone, was [477] borrowing money and paying 2 per cent a month therefor, to enable it to purchase certain securities, and that it wished to borrow additional moneys for the purchase of official pay vouchers, and would pay interest on such money at the rate of from 1 to 1½ per cent a month. Squier offered to borrow moneys from the defendant at such rate, but the defendant declined to make such loans, and informed Squier that he had no knowledge of Squier's responsibility, and that 10 per cent per annum was the highest rate of interest he had ever paid or received. Subsequently, Squier came to him with some of the pay vouchers, and urged him to receive the same as security for money to be lent to Squier to enable him to purchase such vouchers, and proposed that, for the money so lent, the note of Squier & Co. should be given, and interest paid at the rate of 10 per cent per annum, payable at the end of each month, and half as much more, to be applied on the principal in final settlement. It was also proposed by Squier that the securities so obtained should be delivered to the defendant, and should be surrendered by him as they matured, on payment of the money they represented, or by having others of like kind and amount substituted for them, provided payments were so made before the maturity of the notes given for the money borrowed. The defendant agreed to this proposal; and, from April, 1879, to April, 1882, he lent to Squier & Co. nearly $48,000, taking notes for each separate loan, at 10 per cent interest, and pay vouchers as security therefor. The loans were intended by the defendant to have amounted in the aggregate to only a small sum, but they finally aggregated a large sum, and, when he found that payments were not made as promised, he refused to make further loans, and took a memorandum to protect his title to the vouchers and his right to collect them. For each loan made by him to Squier & Co., a separate note was so taken, and the various notes were subsequently consolidated into the two notes for $40,000 and $4,000. Some time in 1882, there having been an extension given and a renewal of notes, and due credit given for all sums received from Squier & Co. to apply on the loans, both interest and principal, Squier & Co. agreed to pay off the [47 debt entirely, at a time not later than the early spring of 1883. This not having been done, the defendant, on August 1, 1883, demanded a settlement from Squier & Co., but at the re-

quest of Squier & Co., consented to a further extension of six months as to $40,000 of the indebtedness, the defendant then holding the notes of Squier & Co. for $44,000, and pay vouchers as security therefor to about that amount. The interest on the notes had then been fully paid, and the debt had been slightly reduced by the monthly payments in excess of interest, made subsequently to April, 1882, the amount of which excess was less than $3,000. Renewal notes were given for the same total amount as those surrendered by the defendant, leaving for further consideration what exact amount should be credited, with the agreement that, by means of such credit and payments of money, $4,000 of the debt should be canceled within three months. Squier & Co. agreed that while the notes were running they would keep the securities fully equal to the debt, and when unable to pay from the profits the stipulated monthly sum to apply on the notes, then any sums collected on the vouchers should not be reinvested nor others taken in lieu thereof, but should be applied on the debt, and that the securities of the defendant and any collections thereon should be kept free from other transactions of the firm. No portion of the notes was thereafter paid, except the monthly sum of $540 at the end of each month, before the failure of Squier & Co. Meantime, because of the reduction of the debt, though it was slight, the defendant allowed Squier & Co., in the exchange of securities, to reduce their aggregate. In so doing, he confided in Squier as to the quality and amount of the substituted securities, and, on the failure of Squier & Co. was surprised to find that the amount of securities held by him was less than had been represented and less than the aggregate debt, and that many of them which had been represented to be good were worthless.

This agreement so made and dated August 1, 1883, was evidenced by the following written instrument, executed by J. H. Squier & Co. and the defendant: "This agreement witnesseth, that James B. Edmonds has delivered to [479] J. H. Squier & Co. forty-four thousand dollars, for investment by the latter for the former in the purchase of pay vouchers, payable not later than six months from date of purchase, of officers in army, navy or civil service of the United States, and for reinvestment, upon collection by said Squier, in same kind of securities, but not unless they are purchased so as to yield to said Edmonds a net profit of one and one fourth per cent per month on forty thousand dollars and one per cent per month on four thousand dollars, and enough besides to pay said Squier & Co. for their services and for guaranteeing prompt payment of the vouchers. Said Squier & Co. guarantees the genuineness of each voucher he shall purchase, as well as its prompt payment, and the return to said Edmonds of said principal sum of forty-four thousand dollars over and above said profits, and may retain all profits above those going to said Edmonds as aforesaid. Said Squier & Co. shall transact all the business without charge. Said Edmonds shall keep possession of the vouchers to the extent of the principal invested and two per cent besides, and will exchange, as they become payable, for others of like kind or for cash. He may keep his safe therefor in banking house of said Squier free of charge. Said Squier & Co. give their notes to said Edmonds for $44,000 and interest at ten per cent, to wit: one for forty thousand dollars and one for four thousand dollars, of same date as this memorandum, and as a further guaranty and indemnity to Edmonds. This contract shall terminate upon notice by either party or upon death of either, and then all the moneys so invested shall be returned to said Edmonds, with interest to extent aforesaid; and in case of death of said Edmonds the money shall be paid to his present wife, if she survive him. All moneys that may be collected by said Edmonds on said vouchers and received shall be credited to said Squier & Co. on said notes."

The total amount of the loans made by the defendant to Squier & Co. amounted to nearly $48,000, and the total amount of the moneys paid by Squier & Co., or Squier, to the defendant in respect of such loans, for interest or principal, or for any other purpose, was less than $29,000. No sums were drawn out of [480] the firm by the defendant or received from it, except such payments to be applied first upon interest and the residue upon the principal. The defendant never put any money into the firm or had any business transactions with it, except to make such loans, which were made to accommodate Squier & Co. and to enable them to purchase the vouchers, on condition that they should deliver them to the defendant as security for the loans. A note was given in every instance for the loan, bearing 10 per cent interest, which notes were surrendered to Squier & Co. whenever others were given in lieu thereof. The securities in question were delivered to the defendant from month to month, in lieu of others for the same or larger amounts surrendered to Squier & Co., it being usual for Squier & Co. to deliver a certain amount to him and to receive back others which had matured, of like or larger amounts; and occasionally the defendant intrusted small amounts to Squier & Co. for collection, upon the agreement to return a similar amount in a few days, to be purchased with the proceeds of the collection, according to the written agreement of August 1, 1883. A similar but briefer memorandum had been made in 1882 between the parties, which was given up with the old notes, to Squier & Co., on August 1, 1883. The total number of the notes given by Squier & Co. to the defendant was equal to the total number of the loans and renewals.

A replication was put in to this answer, and proofs were taken on both sides. The case was heard by the court at special term, before *Mr. Justice* Cox, and a decree made dismissing the bill. A copy of the opinion of the court is furnished to us, but it does not seem to be reported.

It appears from the opinion that the grounds on which the bill was dismissed were that, although there may have been a partnership between the parties as to the particular venture or investment of the money in the securities in question, such a contract of partnership did not connect the defendant with the general business of Squier & Co.; that the contract was, that in consideration of certain moneys placed by the defendant in the hands of Squier,

he would purchase for the defendant a certain class of securities, which securities were not to [481] be mingled with the general business of Squier & Co., but were to be placed in the possession of the defendant and held by him; that no profits were to be received by the defendant except from this particular venture; that the property which the defendant's money was to buy was to be bought at a rate which would yield to the defendant a specified profit, and enough besides to pay Squier & Co. for their services and for guaranteeing prompt payment of the vouchers; that the property placed in the hands of the defendant was thus to be worth that much more than he paid for it, and his profit was to be derived from the identical securities which his money purchased; that the evidence showed that there was a large business done by Squier & Co. outside of the transactions with the defendant, in which business the defendant did not participate; that the parties connected with such other business had no concern with the transactions between the defendant and Squier & Co.; and that, although the relation between the defendant and Squier might be called a partnership relation, to the limited extent mentioned, it was not of such a character as to involve the defendant in the responsibility with Squier claimed in the bill.

The plaintiff appealed to the court in general term, which affirmed the decree of the special term; and from that decree the plaintiff has appealed to this court. No opinion was rendered by the general term, and it may therefore be assumed that it proceeded upon the grounds stated by *Mr. Justice* Cox.

We are of opinion that, upon the same grounds, the decree must be affirmed. In addition, it may be said that the evidence sustains the matters set up in the answer; that it is not shown that the defendant ever represented himself to be a member of the firm of Squier & Co.; nor does it appear that any creditor of that firm was ever informed or supposed that the defendant was such member, or gave credit to the firm, or had dealings with the firm on the understanding or belief that he was a partner. The dealings between the parties appear always to have been of the character mentioned in the written paper of August 1, 1883. In every case of an advance or loan of money by the defendant to Squier & Co. a [482] note was given to the defendant for the amount, bearing 10 per cent interest, and pay vouchers for the same amount were placed in the hands of the defendant. The money lent by the defendant to Squier & Co., for which the notes were given, was to be invested in vouchers which were to be bought at a rate to net in the way of discount the profit designated in the agreement; but that profit was not intended to be a profit to the defendant in addition to the 10 per cent interest, for it was expressly provided that all moneys which might be collected by the defendant on the vouchers or received by him should be credited to Squier & Co. on the notes. This compelled a credit to Squier & Co., on the principal of the notes, of all the monthly sums paid by Squier & Co. to the defendant, and called "profits," over and above the amount necessary to pay to him 10 per cent interest on the aggregate amount of his loans; and the practical construction of the agreement by the parties was to the same effect—because the testimony of Edmonds shows that he had various settlements from time to time with Squier, in which prior notes that he had received from Squier for loans were surrendered to Squier, on the ground that they had been extinguished by the surplus of the monthly payments by Squier, over and above the amount necessary to pay to the defendant interest at 10 per cent on the moneys which he had lent to Squier. It was lawful to stipulate in writing for interest at 10 per cent. Rev. Stat. D. C. § 714.

Decree affirmed.

UNITED STATES, *Appts.*, [452]
v.
JOSEPH M. CUMMING ET AL.

JOSEPH M. CUMMING ET AL., *Appts.*,
v.
UNITED STATES.

(See S. C. Reporter's ed. 452-455.)

Act for the relief of Cumming, construction of—liability of the Government—acts of officers.

1. The Act of Congress of February 26, 1885, for the relief of Joseph M. Cumming and others, gave the Court of Claims jurisdiction of the particular demand named therein, and authorized it to give such judgment as, under the evidence, would be consistent with law.

2. Congress thereby intended that the court should determine the liability of the Government, by the settled principles of law. The only right waived by the Government was a defense based upon the Statute of Limitations.

3. Plaintiffs were not entitled to judgment against the United States in any sum for the wrongs complained of; for if the revenue officers, whose acts caused the injury, did nothing more than the law authorized them to do, neither they nor the Government would be liable in damages; while, if they acted illegally, they would be personally liable in damages, not the Government.

[Nos. 723, 724.]

Submitted Jan. 4, 1889. Decided April 22, 1889.

CROSS appeals from a judgment of the Court of Claims, against the United States, for damages sustained by plaintiffs in consequence of certain acts of a Collector of Internal Revenue and other officers under him. *Reversed.*

The facts are stated in the opinion.

Messrs. **Michael Jacobs, Leonard Myers,** and **David McAdam,** for Cumming *et al.*:

The special Act in this case recognizes clearly the liability of the Government for the acts recited in the bill.

Langford v. *U. S.* 101 U. S. 346 (25:1012); *Roberts* v. *U. S.* 92 U. S. 41 (23 646); *Cross* v. *U. S.* 81 U. S. 14 Wall. 483 (20:722); *U. S.* v. *Padelford*, 76 U. S. 9 Wall. 538 (19:790); *U. S.* v. *Anderson*, 76 U. S. 9 Wall. 65 (19:617); *Slaughter House Cases*, 83 U. S. 16 Wall. 67 (21:405); *Hopkins* v. *Com.* 3 Met. 460; *Thomas* v. *U. S.* 16 Ct. Cl. 522.

Where a government official assumes an authority which the law does not warrant him in exercising he is personally responsible.

Ex parte Milligan, 71 U. S. 4 Wall. 3 (18:

281); *Planters Bank* v. *Union Bank*, 83 U. S. 16 Wall. 483 (21:473); *Mitchell* v. *Harmony*, 54 U. S. 13 How. 115 (14:75); *Griffin* v. *Wilcox*, 21 Ind. 370; *Johnson* v. *Jones*, 44 Ill. 142; *Hough* v. *Hoodless*, 85 Ill. 166; *Wilson* v. *Franklin*, 63 N. C. 259; *Hogue* v. *Penn*, 3 Bush, 663.

But where the injury was done in the exercise of orders from a superior authority, which the agent was powerless to resist, the remedy is by an appeal to the justice of the Government, or to such court of claims as the Government may empower to hear and allow claims against itself.

Durand v. *Hollins*, 4 Blatchf. 451; *Ford* v. *Surget*, 46 Miss. 130; *Sutton* v. *Tiller*, 6 Coldw. 593; *Despan* v. *Olney*, 1 Curt. C. C. 306.

The Act of February 26, 1885, is a remedial statute, requiring such a rational and liberal construction as will give effect to the just intention of Congress.

Roberts v. *U. S.* 92 U. S. 41 (23:646); *Cross* v. *U. S.* 81 U. S. 14 Wall. 483 (20:722); *U. S.* v. *Padelford*, 76 U. S. 9 Wall. 538 (19:790); *U. S.* v. *Anderson*, 76 U. S. 9 Wall. 65 (19:617); *Slaughter House Cases*, 83 U. S. 16 Wall. 67 (21:405).

The object of the Act, expressed by its title, was to afford relief for the injuries it recites.

Hopkins v. *Com.* 3 Met. 460; *People* v. *Chapin*, 7 Cent. Rep. 293, 105 N. Y. 316; *Thomas* v. *U. S.* 16 Ct. Cl. 522; *Valdez* v. *U. S.* 16 Ct. Cl. 550.

The Government adopted the act of its officers.

Wood v. *U. S.* 41 U. S. 16 Pet. 359 (10:987); *Buron* v. *Denman*, 2 Exch. 167; *Peterson* v. *New York*, 17 N. Y. 449, 458; *Woodbridge* v. *Proprietors of Addison*, 6 Vt. 204; *Hoyt* v. *Thompson*, 19 N. Y. 207; Dillon, Mun. Corp. § 385; *Law* v. *Cross*, 66 U. S. 1 Black, 533 (17: 185); *Courcier* v. *Ritter*, 4 Wash. C. C. 549; *Union Gold Min. Co.* v. *Rocky Mountain Nat. Bank*, 96 U. S. 640 (24:648).

Ratification may be inferred from acquiescence.

Conn v. *Penn*, Pet. C. C. 496; *Clark* v. *Van Riemsdyk*, 13 U. S. 9 Cranch, 153 (3:688); *Commercial Bank* v. *Warren*, 15 N. Y. 577; *Johnson* v. *U. S.* 2 Ct. Cl. 415; *Grant* v. *U. S.* 1 Ct. Cl. 41; 2 Ct. Cl. 551; *Wiggins* v. *U. S.* 3 Ct. Cl. 412; *Norris* v. *Doniphan*, 4 Met. (Ky.) 385; *Corbin* v. *Marsh*, 2 Duv. 193.

The liability is public, not personal.

Olney v. *Wickes*, 18 Johns. 122; *Nichols* v. *Moody*, 22 Barb. 611; *Hall* v. *Lauderdale*, 46 N. Y. 74, 75; Story, Agency, chap. 11, § 302; Dunlap's Paley, Agency, 376, 377; *Choctaw Nation* v. *U. S.* 119 U. S. 41 (30:319).

Messrs. **A. H. Garland**, *Atty-Gen.*, and **Robert A. Howard**, *Asst. Atty-Gen.*, for the United States:

Public agents can only bind the Government where they have actual authority.

The Floyd Acceptances, 74 U. S. 7 Wall. 666 (19:169).

A government cannot be sued without its consent. Permission must be by statute; and these statutes, being in derogation of common law and relinquishing sovereign rights, must be strictly construed.

Beers v. *Ark.* 61 U. S. 20 How. 527 (15:991); *U. S.* v. *Clarke*, 33 U. S. 8 Pet. 436, 444 (8: 1001); *Cary* v. *Curtis*, 44 U. S. 3 How. 236, 245 (11:576).

Bailey's acts, if not justifiable, were trespasses. He could have been held to make redress; but these acts were not of such a character as to make the United States responsible.

Gibbons v. *U. S.* 75 U. S. 8 Wall. 269, 274 (19:453, 454); Story, Agency, § 307, a; *Whiteside* v. *U. S.* 93 U. S. 247 (23:882); *Langford* v. *U. S.* 101 U. S. 345 (25:1012).

This is not properly a remedial statute and is not to be construed by the rules of construction of remedial statutes. Its recitals are not to be taken as statements of facts in the sense that they create liability.

Arthur v. *Bokenham*, 11 Mod. 150; *Leavenworth, L. & G. R. Co.* v. *U. S.* 92 U. S. 740 (23:687); *Harvey* v. *U. S.* 105 U. S. 680 (26: 1209); *U. S.* v. *Jones*, 119 U. S. 477 (30:440); *Tillson* v. *U. S.* 100 U. S. 43 (25:543); *McClure* v. *U. S.* 116 U. S. 145 (29:572); *Erwin* v. *U. S.* 13 Ct. Cl. 49, 97 U. S. 392 (24:1065); *U. S.* v. *Sherman*, 98 U. S. 565, 567 (25: 235, 236).

The judgment is not warranted by the facts.

Biggs v. *Lawrence*, 3 Term Rep. 457; *Clugas* v. *Penaluna*, 4 Term Rep. 467.

The Government does not adopt or ratify torts.

The Athol, 1 W. Rob. 379–382; *Re Ayers*, 123 U. S. 443, 501 (31:216, 228).

Mr. Justice **Harlan** delivered the opinion [453] of the court:

These are appeals from a judgment against the United States in favor of Joseph M. Cumming and Hamilton J. Miller, surviving members of the late firm of J. M. Cumming & Co., formerly manufacturers, distillers, vendors, and exporters of whiskies and alcohols, for the sum of thirty-six thousand dollars, as the damages sustained by that firm in consequence of certain acts of Joshua F. Bailey, collector of internal revenue for the fourth internal revenue district of New York, and of other officers who served under or with him. The amount for which the plaintiffs asked judgment was $1,635,753.

The suit was brought under the authority of the following Act of Congress, approved February 26, 1885 (23 Stat. at L. 639):

"AN ACT for the Relief of Joseph M. Cumming, Hamilton J. Miller, and William McRoberts.

"*Be it enacted, By the Senate and House of Representatives of the United States of America in Congress assembled*, That Joseph M. Cumming, Hamilton J. Miller, and William McRoberts, late copartners in the business of commission merchants and bonded warehousemen in the City of New York, be permitted to sue in the Court of Claims; which court shall pass upon the law and facts as to the liability of the United States for the acts of its officer, Joshua [454] F. Bailey, by reason of the seizure, detention, and closing up of the commission houses and bonded warehouses of said copartners, for the breaking up and interruption of their said business, and for the seizure and detention of the property, books and papers in and connected with said business, by Joshua F. Bailey, collector of internal revenue for the fourth internal revenue district of said State or by said Bailey and other internal revenue officers. The United States shall appear to defend against said suit; and either party may appeal to the su-

preme court as in ordinary cases against the United States in said court; and said suit may be maintained, any statute of limitation to the contrary notwithstanding.

"Approved, February 26, 1885."

It is evident that Congress intended to open the doors of the Court of Claims to the plaintiffs, so far as to permit them to sue the Government, unembarrassed by any defense of the Statute of Limitations, and to obtain an adjudication, based upon "the law and facts," as to the liability of the United States for the wrongs of which complaint is made. In other words, the jurisdiction of the Court of Claims was so enlarged as to embrace this particular demand and to authorize such judgment as, under all the evidence, would be consistent with law. Here, however, we are met with the suggestion that there is a general principle, applicable, as this court said, in *Gibbons* v. *United States*, 75 U. S. 8 Wall. 269, 275 [19:453, 454], to all governments, which "forbids, on a policy imposed by necessity, that they should hold themselves liable for unauthorized wrongs inflicted by their officers on the citizen, though occurring while engaged in the discharge of official duties." Did Congress intend to abrogate this principle so far as the demands of the present plaintiffs are concerned? Did it invest the Court of Claims with jurisdiction to render a judgment against the United States upon its appearing that the revenue officers transcended the authority conferred upon them by law, or had exercised their authority in such manner as made them personally liable in damages to the plaintiffs? There would be some ground for an affirmative answer to these questions if the statute had not required the court to pass upon both the law and the facts "as to the liability of the United States." If the facts disclosed a case of unauthorized wrongs done to the plaintiffs by the revenue officers of the United States, the question, by the very terms of the Act, would still remain, whether the United States were liable, in law, for such damages as the plaintiffs had sustained. There would seem to be no escape from the conclusion that Congress intended that the liability of the Government should be determined by the settled principles of law. The only right waived by the Government was a defense based upon the Statute of Limitations. *Erwin* v. *United States*, 97 U. S. 392 [24:1065]; *Tillson* v. *United States*, 100 U. S. 43 [25:548]; *McClure* v. *United States*, 116 U. S. 145 [29:572].

[455]

It is said that the Act, professedly for the relief of the plaintiffs, would be unavailing, unless it is so construed as to relieve them from the operation of the rule laid down in *Gibbons* v. *United States*. A satisfactory answer to this suggestion is that if Congress intended to do more than give the plaintiffs an opportunity, in an action for damages brought in the Court of Claims, to test the question as to the liability of the United States, upon the law and facts, for the alleged wrongs of their officers, that intention would have been expressed in language not to be misunderstood. It is as if the plaintiffs asserted before Congress the liability, in law, of the Government for the damages they sustained, and Congress permitted them to invoke the jurisdiction of the Court of Claims in order that there might be a judicial determination of the question by that tribunal, with the right of appeal "as in ordinary cases against the United States in said court."

According to this construction of the Act, the plaintiffs were not entitled to judgment against the United States in any sum; for, if Collector Bailey and other revenue officers did nothing more than the law authorized them to do, neither they nor the Government would be liable in damages; while, if they acted illegally, they would be personally liable in damages, not the Government.

The judgment is reversed, with directions to render judgment in favor of the United States.

Mr. Justice **Miller** and *Mr. Justice* **Field** dissented.

THE NEW YORK AND COLORADO MINING SYNDICATE AND COMPANY, *Plff. in Err.*, [611]

v.

DAVID R. FRASER ET AL.

(See S. C. Reporter's ed. 611-633.)

Sufficiency of record—paper, when not in evidence—opinion of witness as to value—rental value, how shown—instructions to jury—interest as damages.

1. To obtain a reversal of a judgment it is necessary that the facts upon which such reversal is claimed should appear, from the record, sufficiently to be passed upon.
2. A paper handed to a witness, and read and used by him as a memorandum with which to refresh his recollection, is not thereby admitted in evidence.
3. A witness who has no such knowledge of the marketable condition, or rental value of property as would render his opinion of any use to the jury, beyond the merest guess or conjecture, is not entitled to give his opinion as to its rental value.
4. Where the defendant failed to show by any admissible evidence that there was any rental value for the silver mill mentioned, such rental value could be shown by proving the value or the amount of the ore delivered and milled.
5. It is error to give instructions to the jury applicable to evidence not admitted.
6. Where the machinery put in a mill is unfit for use, and by reason thereof there is a long period of delay in the operation of the mill, and there is no proof of its rental value, it is not error to instruct the jury that they may allow as damages interest on the cost of the mill for the time of the delay.

[No. 204.]

Argued March 14, 1889. Decided April 15, 1889.

IN ERROR to the Circuit Court of the United States for the District of Colorado, to review a judgment entered upon a verdict in favor of plaintiffs in a suit on promissory notes and an account. *Affirmed.*

Statement by *Mr. Justice* **Lamar.**

This writ of error is brought to review a judgment entered upon a verdict for $10,500 in favor of the defendants in error. The case originated in five different suits, brought by them against the plaintiff in error in the Circuit Court of the United States for the District of Colorado, the first on a promissory note made by it for $1,000, and also for $2,531.78 for the price of goods, wares, and merchandise sold and delivered by them to it. The other four were suits on promissory notes given by the defendant to the plaintiffs for $1,500, $2,000, $1,500, and $4,000, respectively. Afterwards, [612]

upon motion of the defendant, these several suits, by order of the court, were consolidated into one. In obedience to this order, the plaintiffs filed a consolidated complaint setting forth these causes of action, the first five being the promissory notes just mentioned, and the sixth being for the goods, wares and merchandise stated as the second cause of action in the first of the aforementioned suits.

The defendant in its answers, original and amended, denied the alleged sale and delivery of the goods as set forth in the sixth cause of action, admitted that it had made the promissory notes sued on and that they were unpaid, but denied its liability thereon. The other defense consisted in the allegation of a special contract between the parties, plaintiffs and defendant, previous to the execution of the notes, and as consideration therefor, whereby the former agreed to manufacture and to sell to the defendant, for and at the price agreed, a roasting cylinder and the necessary apparatus connected therewith, described in the plea, and also to manufacture for and deliver to the defendant a twenty-stamp dry-crushing silver mill and its connected apparatus; and to erect and put the same in their places so as to be run and operated at the mine owned by the defendant in the county of———, State of Colorado, known as the——mine; all of which (cylinder, mill and connections) the plaintiffs warranted, when put in their proper places, under the directions of one Angus McKay, would properly and satisfactorily and in all ways subserve the purposes for which they were purchased by the defendant. The plea further alleged that the cylinder, mill and apparatus, when erected and put in their places, were defective in many particulars, so as to be unfit for the uses for which they were designed, and that by reason of these defects the consideration of the notes failed; and that, to remedy the same and make [613] the mill operate with efficiency, the company was put to large expense for material and new machinery, and was subjected to great loss and damage by the long period of delay in the operations of the mill. The expenses and the special damage thus sustained were pleaded as a failure of consideration, set-off, counterclaim, and recoupment.

On the trial the plaintiff introduced as a witness William J. Chalmers, who testified as to the execution by the defendant of the promissory notes sued on, and further testified, in answer to questions asked, as follows:

"*Q.* Has the firm [meaning the plaintiffs] now any account, not including these notes, against the defendant?

"*A.* Yes, sir.

"*Q.* [Paper shown witness.] Look at that account and see whether this is a copy of the account.

"*A.* Yes sir.

"*Q.* State whether the articles mentioned in that account were ordered by the defendant. And, if so, when."

To which question counsel for defendant objected, on the ground that the items could not be proved wholesale by the list, but the objection was overruled by the court; to which ruling of the court defendant then and there excepted.

And thereupon the witness proceeded:

"*A.* They were ordered at various times, by letter and verbally, between the 25th day of July and December 30, 1882."

The witness then proceeded to read the paper handed him, showing an itemized statement of account aggregating $2,531.78. Said witness further testified as follows:

"*Q.* You may reckon the interest [on said account] from January 1, 1883, up to this time, at six per cent.

"*A.* $233.59."

To which question and answer the defendant objected, on the ground that it was immaterial, but the objection was overruled by the court; to which ruling defendant then and there excepted.

The defendant introduced as a witness one George K. Sabin, who testified that his occupation for the past twenty years had been mining, and that he was in the employ of the defendant as superintendent at the time of the [614] erection of the mill in controversy, and so continued until the mill was shut down. He further testified, *inter alia*, as follows:

"I have been engaged in mining twenty years, and am acquainted with stamp mills, quartz mills, and mining machinery.

"*Q.* What was the fair rental value of this mill and its attachments? And in giving your answer you can give it at so much per month, year, or such other division of time as may be most convenient and intelligible."

To this question counsel for plaintiffs objected, on the ground that it was not the proper measure of damages, and further, because the witness had not shown himself competent to speak on the subject; and the objection was sustained on the last mentioned ground by the court; to which ruling and decision of the court the defendant then and there excepted.

"*Q.* Have you been engaged about mills enough to know what work they perform—what they can do—what they can earn?

"*A.* I have of gold mills. This was the first silver mill I was connected with.

"*Q.* Do you know their cost?

"*A.* I think I do know something of their cost; have been engaged in their construction. The cost of this mill was about $75,000, inclusive of the machinery and everything connected with it.

"*Q.* What was the fair rental value per month of this mill and its attachments?"

To this question counsel for plaintiffs objected on the ground that the witness had not shown himself competent, and the objection was sustained by the court; to which ruling the defendant then and there excepted.

The said witness further testified that the defendant company operated a mine near this mill from which the ore was procured to run through said mill.

"*Q.* Was there sufficient quantity of ore in this mine, accessible, to employ the mill and keep it running to its full capacity?

"*A.* Yes, sir.

"*Q.* How long have you been mining and [615] been acquainted with ores?

"*A.* I have been mining since 1860.

"*Q.* Have you, during the same time, been acquainted with the milling of ores?

"*A.* Yes, sir. This mill at Columbus was the first silver mill I had been with; had been engaged in gold ores.

"*Q.* You have been acquainted to some extent with silver ores and silver mills?

"*A.* Yes, sir.

"*Q.* What was the value of these ores delivered at the Columbus mill in this raw state, as taken from the mine ready to be melted? What was the value for milling purposes?"

To this question counsel for plaintiffs objected, and the objection was sustained by the court; to which ruling the defendant then and there at the time duly excepted.

"*Q.* Do you know of any silver mills of the same kind in that neighborhood?

"*A.* No, sir; there are none in that immediate neighborhood.

"*Q.* At what distance away do you know of any?

"*A.* Up in Leadville. I do not know of any in operation now. There was one in operation the other side of Leadville a year ago, in Soda Creek.

"*Q.* Do you know of any silver mills being rented at Leadville?

"*A.* I do not know of any being rented in the State anywhere?"

The defendant also introduced as a witness A. E. Smith, who, being duly sworn, testified that for twelve years he had been running stamp-mill works and quartz mills, and manufacturing assayers' supplies; that he had been in the employ of defendant, as foreman of the mill at Columbus, Colorado, from March, 1882, to December, 1883, and that he had aided in the erection of the mill in controversy. He also testified, in answer to questions as to the capacity and work of said mill, as follows, to wit:

"*A.* In the month of September (1882) we milled 721 cars of ore, which averaged 1,200 [616] pounds each, which makes an average of 18 tons a day. In October we run 977 cars, which averaged 1,200 pounds each, averaging 19 tons a day and a fraction, and in November 1,117 cars, 22 tons per day; in December 902 cars, 18 tons a day.

"*Q.* Can you state the amount of ore that was milled during the months of March and April following?"

To this question counsel for plaintiffs objected on the ground that it was immaterial, irrelevant, and incompetent, and the objection was sustained by the court; to which ruling and decision defendant excepted.

"*Q.* Can you give the amount of ore that was milled during the month of January?"

To this question counsel for plaintiffs objected, on the ground last above given, and the court sustained the objection; to which ruling and decision of the court the defendant then and there excepted.

"*Q.* What was the capacity of that mill per day upon that ore from September 4 to December 31, 1882, but for the defects in the cylinder and conveyors which have been described?

"*A.* We run 30 tons a day afterward.

"*Q.* With the mill in good working order, what would have been its capacity?

"*A.* 30 tons per day.

"*Q.* What was the worth of milling that ore per ton?"

Plaintiffs' counsel objected to this question, on the ground that it was immaterial and not the proper measure of damages.

By the court (to the witness):

"What was the cost?

"*A.* About six dollars per ton and a few cents."

The witness further testified as to the expense of operating the mill, the number and wages of the men, and cost of fuel, the number of days the mill was idle, wholly or partially, by reason of the defects complained of, the saving of wages by diminution of the working force when the mill was idle, and the extent to which employés were turned to other labor while the mill was not running, and was then further interrogated by counsel for defendant:

"*Q.* What wages would you have been compelled to pay to other men had you employed [617] them to do that same work for which you paid these men, during the time the mill was stopped?"

To this question counsel for plaintiffs objected, and the objection was sustained by the court; to which ruling and decision of the court defendant then and there excepted.

The defendant also introduced as a witness one H. A. Hurlbut, who testified that he was a managing director of the defendant company in 1881 and 1882, and also testified, among other things, that one Riotti was a mining expert and a metallurgist, upon whom the defendant relied as to the best method of extracting silver from the ore; that upon his recommendation the white roasting furnace had been selected, and that defendant had employed the plaintiffs as machinists to erect it; that the defendant relied on said Riotti as to the proper process for the separation of the ores, but relied solely on the plaintiffs for the mechanical construction and erection of the machinery; and further, in answer to questions, testified:

"*Q.* What was Riotti directed or authorized to do about the specifications?

"*A.* He was authorized to give the draughtsman the incline of the hill—the room there was into the base of the retaining wall—the relative positions of where the stamps and the roasting cylinder were to be and where the furnace should be placed in position, and to give relative positions and distances.

"*Q.* Had he anything to do with the mechanical construction of the mill?

"*A.* No, sir."

The plaintiffs recalled, in rebuttal, the witness William J. Chalmers, who further testified:

"Hurlbut said that Riotti had been engaged by the New York parties as consulting engineer, as they wanted to hold some one responsible for the working of the ores. We were notified to comply with Riotti's directions. In looking over the original plan of the furnace the conveyors were shown in the plan, but Riotti said he preferred . . . desired us to follow the drawing in making the furnace. This

drawing showed the conveyors, as afterwards [618] put in the mill. We changed the original specifications; they were never accepted by the company, they refusing to accept them. We had the acceptance of Riotti of the plans."

At the conclusion of the testimony the defendant requested the court in writing to give to the jury the following instructions on the right of defendant to recoup damages in said cause:

"If the plaintiffs undertook to supply and put up, so it should be complete and in good running order, the mill or machinery mentioned in defendant's second defense, and entered upon the performance of such agreement, and if the machinery supplied proved defective and mechanically inadequate for the purpose intended, or was not complete nor executed in proper manner, or if the work was unskillfully performed, then, in this action, the defendant would be entitled to recover from the plaintiffs the damages actually sustained by reason of such failure of the plaintiffs to perform their agreement; and, in measuring the damages, if any, sustained by defendant, you may consider the loss of the use of the mill and machinery, either wholly or partially, resulting from such defects and unskillful performance; and any sums paid out by defendant in remedying defects and making repairs in such mill and machinery in consequence of such defects."

Which instructions the court refused to give; and to such decision and refusal the defendant then and there at the time duly excepted.

"In estimating defendant's damages in consequence of plaintiff's breach of their undertaking, if you find there was such a breach, you may also consider the necessary and immediate loss of profits incurred by the defendant during the period when the said defendant was, by reason of the alleged defects, deprived of the use of such mill and machinery."

Which instructions the court refused to give, and the defendant excepted.

After the conclusion of the evidence and the argument of counsel in said cause the court, of its own motion, instructed the jury as to the law of said cause; and on the question of the measure of defendant's damages, the court gave [619] certain instructions, to the giving of which, and to each several proposition therein contained, defendant at the time duly excepted.

Mr. **Henry Edwin Tremain,** with whom were *Messrs. Mason W. Tyler* and *James C. Spencer,* on the brief for plaintiff in error.

No counsel appeared for defendants in error.

Mr. Justice **Lamar** delivered the opinion of the court:

The first and second assignments of error rest upon the same ground, and may be considered together. They are: *first,* that it was error for the court, upon the examination of the witness Chalmers (who was also one of the plaintiffs), to admit in evidence the paper handed him showing an itemized statement of account aggregating $2,531.78. It is contended that evidence of this character, "an unproved copy of an unproved account," was inadmisible to show the alleged sale and delivery of merchandise; and *second,* that the court erred in holding such inadmissible testimony to be sufficient evidence of an indebtedness to permit interest on it to be recovered, as testified to. The assumption of fact involved in these assignments, that the paper was admitted in evidence, is not sufficiently supported by the statement in the bill of exceptions.

To obtain a reversal of a judgment it is nec- [620] essary that the fact, upon which such reversal is claimed, should appear from the record, sufficiently to be passed upon.

This bill of exceptions falls far short of a distinct statement that the paper was admitted in evidence; on the contrary, we think the import of the language is that it was not admitted, but that it was handed to witness and read and used by him as a memorandum with which to refresh his recollection of the articles mentioned in the account of plaintiffs. We do not think the court erred in allowing this to be done, and permitting his testimony to go to the jury for what it was worth.

The third assignment of error is, that the court erred in refusing to allow the witness Sabin, introduced in behalf of the defendant, to answer the question, "What was the fair rental value per month of this mill and its attachments?"

This ruling of the court was manifestly proper. It appears from the testimony of the witness himself that he knew of no other silver mill in the neighborhood of Columbus; that he knew of none whatever at that time in operation; that he knew of no silver mill that had been rented in Leadville or in the State anywhere; and that this was the first silver mill he had ever been connected with, though he had been engaged in mining for twenty years, and was acquainted with gold mills enough to know what work they can perform and what they can earn. He evidently had no such knowledge of the marketable condition or rental value of such property as would render his opinion of any use to the jury beyond the merest guess or conjecture. His knowledge and experience of mining mills was such as to render him competent to testify as to the cost of construction, the value of machinery, and the expense of putting it up; and upon these points his testimony was admitted, and was to the effect, among other things, that the mill cost $75,000.

The fourth, fifth, sixth and seventh assignments of error are based upon the rulings of the court on the objections of the plaintiff to the other questions propounded by the defendant to the witnesses Sabin and Smith.

It does not appear clearly from the bill of ex- [621] ceptions for what purpose these questions were propounded. Evidence to show that the capacity of the mill was 30 tons a day had been offered and received to prove the rental value of the mill, and perhaps very properly, as that might be a necessary preliminary fact leading up to the determination of its value for the rental. But after the defendant utterly failed to show, by any admissible evidence, that there was any rental value for a mill of that kind, we think the court did not err in holding that such rental value could be shown by proving the value or the amount of ore delivered and milled. If, however, the object of these questions (as counsel contends in his brief) was to prove the

actual loss of use of the machinery during the period of stoppage, or the loss of the profits that would have accrued but for the defective machinery, the answers most favorable to defendant could only have tended to show losses too undefined to be subject to computation, and profits too remote and speculative to be capable of ascertainment. The ingenious argument of counsel fails to convince us that the court erred in sustaining the plaintiff's objections to the questions.

The ninth assignment of error is, that the court admitted the evidence of the declarations of one Riotti, with regard to the placing of the machinery of the mill, to go to the jury. The introduction of this evidence was objected to, upon the ground that Riotti was not an agent of the defendant in respect to the matters covered by these alleged declarations.

The objection does not seem to be valid. The witness testified that Riotti was authorized by defendant, in respect of the specifications in the contract between the parties, to give the draughtsman the incline of the hill—the room there was into the base of the retaining wall—the relative positions of where the furnace should be placed in position, and to give relative positions and distances. The witness Chalmers, being recalled, testified that "we were notified to comply with Riotti's directions. In looking over the original plan of the furnace the conveyors were shown in the plan. But Riotti said he preferred . . . desired us to follow the drawing in making the furnace. This drawing showed the conveyors, as afterwards put in the mill."

[622] We think this direction or declaration of Riotti was made with reference to the very matters which, according to the testimony of Hurlbut and Chalmers, were directly within the scope of his authority and duty.

We do not deem it necessary to consider the questions whether the instructions requested by the defendant, as above set forth, and refused, are correct, as abstract propositions of law, with regard to the general principles governing the right of recoupment of damages. The bill of exceptions does not show any evidence tending to prove all the facts which these instructions assume to exist. The counsel for plaintiff in error presses the argument that the effect of the exclusion of the questions above mentioned shut out all evidence of the necessary and immediate loss of profits during the time when, by reason of the alleged breaches of the agreement, the use of the mill and machinery was lost to it. It would, in our opinion, have been error to give instructions applicable to evidence not admitted. The legal principles in those instructions, as requested, were, so far as they were founded on the evidence, substantially put before the jury in the general charge of the court.

The bill of exceptions states only so much of the charge as relates to the question of damages in the cause. The learned Judge having, as we are authorized to assume, fairly left to the jury the facts as to the alleged breaches of the contract, instructed them that, if they found the defendant entitled to deduct from the plaintiffs' claim its damages resulting from the delay in the operations of the mill caused by the defective machinery, it was undoubtedly entitled to deduct therefrom the rental value of the mill. Recapitulating the evidence on this point, he then instructed the jury that, in the absence of all evidence as to the rental value, they were at liberty to allow interest on the investment; and that it was shown in evidence that the mill cost $75,000; so that, if they found that the defendant was entitled to damages for delay in running the mill, they would properly allow interest at 10 per cent per annum (which was the statutory rate in Colorado, Gen. Stat. Col. 1883, § 1706) for the time of the delay as proven. [623] He instructed them further, that there was more in the way of damages shown in the wages of the men employed in the mill whose time was lost while the mill was idle; and that for this loss of time, during which they were receiving wages from the defendant, the amount so paid could be added as an element of damages to be deducted from the plaintiffs' demand.

We think the law of the case was fully disclosed to the jury, and that fuller or more specific instructions were not required.

The judgment of the Circuit Court is affirmed.

THE STILLWELL AND BIERCE MANUFACTURING COMPANY, *Plff. in Err.*, [520] *v.* AMOS PHELPS.

(See S. C. Reporter's ed. 520-527.)

Damages on unfulfilled contract—rule—notice—opinion, when admissible.

1. Where there was an agreement by plaintiff to furnish machinery and to put it in operation in defendant's mill, and one installment of the price was to be paid on the delivery of the machinery and before the completion of the work, defendant need not, in order to entitle him to avoid paying the whole contract price, or in order to recover damages for plaintiff's breach of contract, take out the machinery and interrupt his business to obtain new machinery elsewhere.

2. The rule of damages, where such machinery was improperly constructed, is to deduct from the contract price the cost of altering the construction of the machinery, so as to make it conform to the contract.

3. A notice given by defendant to plaintiff that if the latter does not put the mill in repair so that it will do good work, the former will do so and charge the expense to the latter, was sufficient to cover the necessary alterations to accomplish that end.

4. Whether a witness, called to testify to a matter of opinion, has such qualifications and knowledge as to make his testimony admissible, is a preliminary question for the judge presiding at the trial; and his decision of it is conclusive, unless clearly shown to be erroneous in matter of law.

[No. 209.]

Argued March 18, 1889. Decided April 15, 1889.

IN ERROR to the Circuit Court of the United States for the Eastern District of Wisconsin, to review a judgment in favor of defendant in an action to recover for machinery put in a mill. *Affirmed.*

Statement by *Mr. Justice* **Gray:**

This was an action by an Ohio corporation [521] against a citizen of Delavan in the State of Wisconsin, upon a contract in writing, by which the plaintiff agreed "to furnish and put in complete operation for the second party, in

his flouring mill at Delavan aforesaid, one first class seventy-five barrel capacity roller mill complete," including certain machinery specified; "the first party to use all machinery, belting, etc., etc., now in said flouring mill that is in proper condition for use, except what is now in use on the rye and feed side of said mill; all of said mill, machinery, fixtures and apparatus to be new and first class in every way and of latest pattern, except as above specified, and to be completed and put in complete running order within ninety days from the date hereof"; and the defendant agreed to pay the plaintiff "for the said mill, fixtures, etc., complete as above specified, and put in complete operation in his flouring mill at Delavan aforesaid," the sum of $9,000, as follows: $3,000 "upon the arrival of said mill and machinery at his mill in Delavan," $4,000 "when said mill is completed and in running order to the satisfaction of the second party," and the remaining $2,000 "within ninety days after the completion of the said mill as aforesaid, the first party to start the mill and see that it is in complete running order."

The complaint alleged the plaintiff's performance of the contract on its part, the defendant's payment of $3,272.47, and his refusal to pay the balance of $5,727.53, which the plaintiff sought to recover, with interest. The defendant in his answer set up by way of defense, and also under a counterclaim for $11,000, delay on the part of the plaintiff, and defects in the manufacture and design of the machinery furnished, whereby the defendant had been put to great expense to complete it so as to comply with the requirements of the contract, and had been deprived of the use of his flouring mill and injured in his business. The plaintiff filed a replication, denying all the allegations in the counterclaim.

At the trial, the plaintiff introduced evidence tending to show that the machinery was put in the defendant's flouring mill in compliance with the terms of the contract, except for a delay of several weeks, in part chargeable to the [522] defendant's fault, and was tested in February, 1884, with satisfactory results.

On the question of the damages to which the defendant was entitled for the delay, the plaintiff called as a witness one Geissner, who testified that he was the owner and manager of a roller flouring mill of about seventy-five to one hundred barrels capacity in an adjoining county, and was personally familiar with roller mills and the milling business; but had never seen the defendant's mill, or been in Delavan, and knew nothing from personal observation or knowledge of the extent of the custom work of the mill, its business, or product, or of the water power.

He was then asked to state the rental value of the mill in question, in his judgment, during the period in question. The question was objected to, "because the witness had never seen and had no personal knowledge of the property in question, and was therefore incompetent to testify as to rental value." The court sustained the objection, and the plaintiff excepted to the ruling.

The witness was then asked to state such rental value, "upon the supposition that the said mill had a good water power and all the business it could attend to, as claimed by the defendant, and a capacity of manufacturing seventy-five barrels per day." To this question the same objection was made, and sustained by the court, and the plaintiff excepted as before.

The defendant then introduced evidence tending to show that the machinery and work furnished by the plaintiff did not comply with the contract, and did not and could not operate satisfactorily; and that his flouring mill, with the machinery constructed and placed therein by the plaintiff, did not and would not do as good work as other roller mills of like capacity; and that it was necessary, in order to put it in condition to do such work, to expend the sum of $2,772, including $1,100 for the cost of new machinery; and that the defendant did this after his attorneys had served upon the plaintiff's attorney, and the plaintiff had neglected to comply with, a notice in these words: "If your clients do not within ten days proceed to [523] put the mill in repair so that it will do good work, Mr. Phelps will employ the best millwrights he can obtain and put the mill in order, and charge the expense to your clients."

The court, at the plaintiff's request, gave to the jury the following instructions: "The plaintiff was entitled to a fair test of the machinery put into the defendant's mill, and nothing short of that would justify its condemnation. Such a test requires an ample power to operate the machinery to the best advantage; and this means the whole of the machinery, if the jury find that the machinery was designed and intended to be operated together. It also contemplates competent management by a miller who thoroughly understood such machinery and was able to manipulate and handle it so as to secure the best results of which it was capable."

The court also instructed the jury as follows: "If the plaintiff broke this contract by failing to furnish the defendant such a mill as it was bound to furnish, then the defendant had the right to give the plaintiff notice that it was required to remedy the defects, and on its failure to do so the defendant could then proceed and correct the defects himself, so that the mill should be such as he was entitled to have under the contract, and charge the reasonable and necessary expenses of the work to the plaintiff. The limit to which the defendant could go in that direction is this: He would have the right to make the mill completely answer the demands of the contract and nothing more, that is, a first class complete roller mill of the designated capacity, capable of doing as good work as other first class roller mills of similar grade and capacity would do on the same kind of stock. He would only have the right to incur and make the plaintiff chargeable with such expenses as were reasonable and necessary to put the mill in that condition. If the system put into the defendant's mill could have been perfected by alterations in matters of detail so as to make it first class, complete, capable of doing the work contemplated by the contract, then the additional work on the mill should have been limited to such alterations; but if it could not be thus perfected without more radical changes and additions, then the defendant had the right to

[524] proceed so far as actual necessity required, making the expense of the work as moderate and reasonable as the circumstances permitted."

The plaintiff excepted to this portion of the instructions, for the reason that "The same authorizes the jury to allow the defendant, and to deduct from the claim of the plaintiff, as a part of the expense of changing the mill over so as to make it conform to the contract, the cost of the new machinery put into the mill, amounting to $1,100."

The jury returned a verdict by which "They find the issue herein in favor of the defendant, but that the defendant is not entitled to recover damages against the plaintiff in excess of the plaintiff's claim against the defendant." Judgment was rendered on the verdict, and the plaintiff sued out this writ of error.

Mr. **Gerry W. Haselton,** for plaintiff in error:

Where the thing furnished is to be satisfactory to the purchasing party and he neglects to return or to offer to return it, but takes it into possession and uses it either in the shape in which it is, or for the purpose of making it over into something different, he thereby obligates himself to pay for it at the contract price, and is not at liberty to recoup the cost of such reconstruction in an action for the price.

Campbell Printing Press Co. v. *Thorp*, 36 Fed. Rep. 414*; *McCarren* v. *McNulty*, 7 Gray, 139; *Brown* v. *Foster*, 113 Mass. 136; *Wood R. & M. Machine Co.* v. *Smith*, 50 Mich. 570; *Hallidie* v. *Sutter Street R. Co.* 63 Cal. 575; *Hoffman* v. *Gallaher*, 6 Daly, 42; *Singerly* v. *Thayer*, 1 Cent. Rep. 52, 108 Pa. 291; *Silsby Mfg. Co.* v. *Chico*, 24 Fed. Rep. 893; *Seeley* v. *Welles*, 12 Cent. Rep. 422, 120 Pa. 69; *McClure* v. *Briggs*, 1 New. Eng. Rep. 621, 58 Vt. 82; *Baltimore & O. R. Co.* v. *Brydon*, 3 Cent. Rep. 213, 65 Md. 198; *Plano Mfg. Co.* v. *Ellis* (Mich.) 12 West. Rep. 482; *Platt* v. *Broderick* (Mich.) 14 West. Rep. 865; *McCormick Harvesting Machine Co.* v. *Chesrown*, 33 Minn. 32; *Gray* v. *N. J. Cent. R. Co.* 11 Hun, 70.

The measure of damages for breach of contract for putting up particular work, as for instance, a steam boiler, by doing the work unskillfully or with defective material, is the difference between its value in its defective condition and what its value would be if completed in compliance with the contract.

White v. *Brockway*, 40 Mich. 209; *Merrill* v. *Nightingale*, 39 Wis. 250; *Boothby* v. *Scales*, 27 Wis. 626; *Bonnell* v. *Jacobs*, 36 Wis. 59; Wood's Mayne, Dam. § 118.

A party may return or offer to return an article which does not comply with the terms of the warranty, and recover back what he has paid.

Woodle v. *Whitney*, 23 Wis. 55.

A witness familiar with such property in a neighboring city where the conditions are similar ought to be competent to testify as to rental value.

Butler v. *Mehrling*, 15 Ill. 488; *Alfonso* v. *U. S.* 2 Story, 421; *Sturgis* v. *Knapp*, 33 Vt. 531; *Whitbeck* v. *N. Y. Cent. R. Co.* 36 Barb. 644; *Whitney* v. *Thocher*, 117 Mass. 526; *Cliquot* v. *U. S.* 70 U. S. 3 Wall. 114 (18: 116).

Mr. **John T. Fish** for defendant in error.

Mr. Justice **Gray** delivered the opinion of the court: [526

The principal position taken in the argument for the plaintiff is that the defendant, having received and retained the machinery furnished under the contract sued on, was bound to pay the contract price; and, in support of this position, cases were cited holding that, under a contract to manufacture or to furnish a chattel satisfactory to the purchaser, the purchaser, if he takes possession of and uses it, thereby conclusively accepts it as satisfactory and binds himself to pay the whole contract price.

Considering the instructions given at the plaintiff's own request and the grounds on which the plaintiff excepted to the other instructions of the court, it is, to say the least, doubtful whether this point is open. But, assuming it to be open, it clearly cannot be sustained, and the cases cited are inapplicable.

The plaintiff's agreement was not for a sale of the machinery, subject to a condition that it should be satisfactory to the purchaser. But it was an agreement, not only to furnish machinery of a certain description and quality, but also to set it up and put it in complete operation in the defendant's mill. The machinery was to be erected on the defendant's land and made part of his mill; and one installment of the price was to be paid on the delivery of the machinery there, and before the plaintiff had completed the work to the satisfaction of the defendant. In such a case it would be most unreasonable to compel the defendant, in order to entitle him to avoid paying the whole contract price or to recover damages for the plaintiff's breach of contract, to undergo the expense of taking out the machinery and the prolonged interruption of his business during [527] the time requisite to obtain new machinery elsewhere. The rule of damages adopted by the court below, of deducting from the contract price the reasonable cost of altering the construction and setting of the machinery so as to make it conform to the contract, is the only one that would do full and exact justice to both parties and is in accordance with the decisions upon similar contracts. *Benjamin* v. *Hillard*, 64 U. S. 23 How. 149 [16: 518]; *Florida R. Co.* v. *Smith*, 88 U. S. 21 Wall. 255 [22: 513]; *Marsh* v. *McPherson*, 105 U. S. 709, 717 [26: 1139, 1142]; *Cutler* v. *Close*, 5 Car. & P. 337; *Thornton* v. *Place*, 1 Mood. & Rob. 218; *Allen* v. *Cameron*, 3 Tyrwh. 907; *S. C.* 1 Cromp. & M. 832.

The notice given by the defendant to the plaintiff "to put the mill in repair so as to do good work" was sufficient to cover all alterations necessary to accomplish that end.

No error is shown in the exclusion of Geissner's testimony as to the rental value of a mill which he had never seen and knew nothing of. Whether a witness called to testify to any matter of opinion has such qualifications and knowledge as to make his testimony admissible is a preliminary question for the judge presiding at the trial; and his decision of it is conclusive, unless clearly shown to be erroneous in matter of law. *Perkins* v. *Stickney*, 132 Mass. 217, and cases cited; *Sorg* v. *First German Congregation*, 63 Pa. 156.

Judgment affirmed.

*See *S. C.* and note, 1 L. R. A. 645. [Ed.]

[572]

JOHN SYNNOTT ET AL., *Appts.*, v. MICHAEL SHAUGHNESSY.

(See S. C. Reporter's ed. 572-580.)

Decision on the facts—open defects, known to party, not the subject of misrepresentation.

1. The findings of fact in this case negative the positions, relied upon by plaintiffs in error, that defendant willfully misled plaintiffs and induced them to sell a silver mine for a price less than its value, and that defendant agreed to pay plaintiffs' agent money to conceal from them the existence of a valuable body of ore, and procured a conveyance from plaintiffs of the mine in fraud of their rights.

2. Purely surface indications, open to all ordinary observers and situated on the path which plaintiffs traveled in going to and from their work and which must have been known to them, are not the subject of concealment and misrepresentation.

[No. 176.]

Submitted Jan. 25, 1889. Decided April 22, 1889.

APPEAL from a judgment of the Supreme Court of the Territory of Idaho, in favor of defendant in an action to annul the sale of a silver mine and to compel him to reconvey the same. *Affirmed.*

The facts are stated in the opinion.

Messrs. **J. G. Sutherland** and **John R. McBride** for appellants.

No counsel appeared for appellee.

[573] *Mr. Justice* **Lamar** delivered the opinion of the court:

On the 24th of May, 1882, John Synnott and Peter Welch commenced an action in one of the territorial courts of Idaho Territory against Michael Shaughnessy, to have annulled the sale of the Eureka Silver Mine, situated in Mineral Hill mining district, Alturas County, in that Territory, and to compel him to reconvey the same to them as vendors. In their complaint the plaintiffs alleged that on the 5th day of July, 1881, they were the owners each of an undivided one half, and in the lawful possession, of the Eureka silver-mining claim, particularly describing it by metes and bounds, which they had located in June, 1880, and upon which they had developed a small seam or vein of galena ore, worth about $1,000; that this vein was all of the ore which had been discovered by them or either of them, upon the mining claim, up to that time, and that they were ignorant of the existence of any other vein or body of ore, and believed that all the value that was then attached to the mining claim arose from the developments they had made upon the claim and the ore they had discovered, and did not exceed $2,500; that on or about the 3d of July, 1881, the defendant, by his agents and employés, had discovered upon a part of the Eureka mining claim, remote from the places where the plaintiffs had been at work, a large and valuable vein, or body of ore, from eighteen inches to four feet in thickness, extending about seventy feet continuously along said vein, the existence of which rendered the mine worth at least $100,000, and of the existence of which these plaintiffs were wholly ignorant; that the defendant, by his agents and servants, intending to cheat and defraud these plaintiffs, fraudulently and falsely concealed and suppressed from them the knowledge of the existence of such vein or ore body, and misrepresented the facts concerning the same, and fraudulently and falsely represented to them that no other ore body or vein of ore existed in the mining claim, except such as was known to these plaintiffs; that such false and fraudulent statements were made by the defendant, his agent and employés, in order to enable him to purchase the mining claim at a price far below its real value; that [574] by means of such false and fraudulent concealment and misrepresentations these plaintiffs, who believed the same to be true, were made to believe that no other body or vein of ore existed in the mining claim than that which was known to them, and that the real value of the claim was not more than $2,200; that immediately prior to the discovery of the ore vein or ore body by the defendant, these plaintiffs had employed one Henry Porter as an agent to find for them a purchaser of their claim at the sum of $2,500, and agreed to pay him ten per cent of that sum if he should make a sale thereof at the price mentioned; that during such employment of Porter, and while he was endeavoring to obtain a purchaser for the mine, he, himself, first made the discovery of the aforesaid ore vein and ore body, which was unknown to these plaintiffs; that upon such discovery Porter concealed the same from the plaintiffs, and falsely and collusively and for a consideration paid to him by the defendant, to wit, $1,000, informed the defendant of the existence of such large vein or ore body, and then and there, in violation of his employment by these plaintiffs, and in fraud of their rights, entered into the employment of the defendant, and undertook and agreed to assist him in concealing from them the knowledge of the existence of the ore body he had discovered, and in obtaining the mining claim from them at the price of $2,200, which was greatly below its real value; that by reason of those false, fraudulent and collusive acts of Porter, as well as the misrepresentations and concealments of the defendant, these plaintiffs were induced to part with their property for the sum of $2,200, and to execute and deliver to the defendant a quit-claim deed of the Eureka mining claim, dated on the 5th day of July, 1881, which was afterwards duly recorded; that by reason of such conveyance thus fraudulently obtained from them, and if the same be not declared fraudulent, null and void, they will sustain great pecuniary loss and damage, to wit, $100,000; that since the conveyance to the defendant of the mining claim he has been in the possession of the same, and has extracted and taken therefrom a large quantity of ore and has made large profits therefrom, to wit, over $3,000; and that the plaintiffs are ready and willing and hereby offer to repay to the de- [575] fendant the sum of $2,200, the purchase price of the mining claim, together with interest from July 5, 1881, upon a reconveyance of the mining property to them.

The prayer for relief was: (1) That the deed of July 5, 1881, be declared fraudulent, null and void, and set aside by the court, and the defendant be decreed to reconvey the mining claim and premises to the plaintiffs upon their paying him the purchase price thereof, to-

gether with lawful interest from the date of the purchase; (2) That the defendant be decreed to account to the plaintiffs for the net proceeds of the ore extracted by him from the mining claim since his purchase thereof, and upon such accounting be decreed to pay the same to the plaintiffs; (3) That the defendant, his agents and employés, be enjoined and restrained from interfering with the mining claim, or extracting or clearing away any of the ore therefrom; (4) That the plaintiffs be put in possession of the mining claim by the process of the court; (5) That the defendant be decreed to pay the costs of this action; and (6) For other and further relief.

The answer of the defendant denied specifically all the material allegations of the complaint, and set out in detail the circumstances attending the purchase of the mine, which, if proved, would establish his good faith in such purchase, and the absence of any fraudulent acts on the part of himself or any of his agents connected with such transactions.

The cause having been heard upon the pleadings and proofs, the court found the facts in favor of the defendant, and entered a decree in his favor. Upon appeal to the supreme court of the Territory, that decree was in all respects affirmed; and an appeal from the latter decree brings the case here.

The findings of fact by the trial court, and which were adopted by the supreme court of the Territory, are twenty in number, and elaborately set out all the facts and circumstances attending the sale of the mine. The material facts, as gathered from these findings, stated briefly, are as follows:

For some time prior to the 5th of July, 1881, [576] the plaintiffs, Synnott and Welch, had owned the Eureka mine, and had lived in a cabin near by. They had done considerable work in developing it, and had found a small vein of ore, from which they had extracted, through several tunnels, about $1,000 worth of ore, then lying on the premises. They were desirous of selling the claim, and entered into an agreement with one Porter, to pay him a commission of ten per cent on the sale thereof, in case he realized from such sale $2,500.

Under these arrangements Porter first applied to one John Gilman to purchase the claim, but no agreement was reached between them. Porter then, on the morning of July 5, 1881, tried to induce one E. A. Wall (who afterwards acted as the agent of the defendant Shaughnessy) to purchase the claim. He informed Wall that he had a verbal option of purchase at the price of $2,000, and that his terms would be a commission of $500, or one fourth of the claim, if Wall should purchase it. In the same interview he stated to Wall that he thought he could show him something on the claim that would induce him to buy it. Porter then having disclosed to Wall that he had a further appointment with Gilman to resume negotiations regarding the claim, Wall declined to have any further conference, or to make any terms for the purchase, so long as negotiations with Gilman continued.

Porter then met Gilman, and they inspected the claim together. Porter showed him float ore which he had discovered at two places on the claim, one of which was on and about the path which Synnott and Welch had usually traveled from their cabin to their work on the claim, and the other at a point about fifty yards from that path. After this inspection Gilman went immediately to Synnott and Welch, and had further negotiations with them, but they failed to agree on any terms. Synnott and Welch then informed Porter that they were willing to sell the claim for $2,000, but in that case could not allow him any commission.

On the evening of that day Porter again went to Wall, and resumed negotiations. They went together over the Eureka claim, and Porter showed Wall the float ore he had found, and insisted on having one fourth of the claim for his option and for showing the float ore. [577] Wall informed him that if he bought the claim it would be for the defendant Shaughnessy, who might prefer to be the sole owner, and proposed that if Porter would allow him ten days to decide he would either allow him one fourth of the claim or pay him $1,000, to which Porter agreed, and at the end of that period, and after the purchase, the $1,000 was paid to Porter accordingly. After their examination of the claim Wall went with Porter to the cabin of Synnott and Welch and informed them that he would buy the claim for $2,000, to which they assented. Wall then told them to come down to his office at Bullion and make out their deed, and they agreed to do so. After Wall and Porter had left, Gilman returned and resumed negotiations with Synnott and Welch, finally offering them $1,800 and one tenth of the proceeds of the claim, or $2,200 in money for the whole. He also informed them of the fact that Porter had discovered float ore on the place. After Gilman had gone away, Porter returned to the cabin of Synnott and Welch, and the three went together to Wall's office. On the way they informed Porter of the offer made by Gilman, and intimated that they would expect the same from Wall, because they were poor, and could not afford to lose the $200, or pay any commission. On their arrival at Wall's office, Porter informed Wall of Gilman's offer, whereupon Wall told them that he would pay $2,200 for the claim, adding, with some asperity, that Gilman should not have it at any price. The deed from Synnott and Welch to Shaughnessy for $2,200 was then drawn and executed and attested, and was acknowledged the following day.

The day after the sale Porter did some work on the claim at one of the points where he had found float ore, and on the following day Wall, as agent of the defendant, put miners at work at one of the places where float ore had been observed, and in the course of a few days, by an open cut 20 by 25 feet, discovered a body of ore in place, which, when taken out weighed 28 tons and netted the defendant about $800.

The ore exposed by Synnott and Welch was taken out and sold by the defendant, netting him about $90.

The defendant afterwards expended about $23,000 in developing the claim, and discovered a large and valuable lode. [578] He has sold ore from it to the amount of about $8,000. At the time this suit was brought he had opened negotiations for the sale of the claim at $150,000.

The plaintiffs in error rest their case upon

two propositions, viz.: (1) The defendant, with knowledge of the existence of a large "body of ore" in this claim, by his agent, who made the purchase, willfully misled the plaintiffs in relation thereto, and induced them to sell for a price which they would not have sold for had they been truly informed of the facts. (2) The defendant, by his agent (Wall), entered into an agreement to pay the agent of the plaintiffs (Porter) a sum of money to conceal from his principals his knowledge of the existence of a valuable body of ore, which he had informed the defendant's agent of, and then procured a conveyance from the plaintiffs of the claim, in fraud of their rights.

These two propositions, in our opinion, are clearly negatived by the 12th, 14th and 15th findings of fact, which are as follows:

"12. The evidence in the case does not show or tend to show that Wall or Porter or any other person had discovered or knew of the existence of any vein or lode of ore in place on the Eureka mining claim, other than such as had been found by and was known to Synnott and Welch, in their excavations, at any time prior to the sale and execution of the deed."

"14. No false or fraudulent representations concerning the Eureka mining claim were ever made to said vendors or anyone else by the defendant, or by any agent or employé of his.

"15. No concealment of any material fact concerning said mining claim was ever made by the defendant or by any agent or employé of his. Neither the defendant nor any agent of his had ever discovered or knew of the existence of any vein or lode on said claim (except such as Synnott and Welch had exposed by their tunnels) prior to the sale, nor until some days had elapsed after the sale."

In the assignment of errors, however, it is insisted that these findings are not responsive to the allegations of the complaint. It is said [579] that the trial court did not make any findings on the following material issues: (1) It did not find as to the value of the ore body discovered in the Eureka mining claim by Porter, and by him shown to Wall at the time the purchase was made by the latter for the defendant; (2) It did not find as to the knowledge of the existence and extent of such ore body by Wall, at the date last mentioned; (3) It failed to find whether Porter discovered any ore body, as alleged, and, if so when, and what was its value and extent; what concealments were practiced by him upon the plaintiffs, if any; what knowledge defendant or his agent had of these concealments; whether plaintiffs were offered or received the value of the claim at the time of the sale thereof; what the defendant paid Porter the $1,000 for; what the contract was between Porter and Wall; and what were Porter's relations to the vendors at the time of the sale.

We do not think there is much force in this contention. It will be observed that the basis of this assignment of error is the assumption that Porter, as the agent of the plaintiffs, prior to the day the mine was sold, had discovered a valuable body of ore, the knowledge of which he concealed from the plaintiffs, and imparted to the defendant.

This assumption, as shown by the findings, to which we are restricted, is entirely without foundation. Neither Porter nor the defendant or his agent, Wall, ever discovered any vein or lode of ore on the claim at any time prior to the sale thereof by the plaintiffs. The counsel for appellants contend that the court, in finding that Porter or Wall discovered no "vein" or "lode," did not find that they discovered no "ore body." We deem it sufficient to say that the context of the complaint shows that those terms were used synonymously by the pleader, in the common parlance of miners, and not with reference to any technical distinction. The only indications of any such ore body or vein that had been found were simply a few small pieces of ore known as "float" ore, which did not of necessity indicate the existence of any large ore body. Further, the fact that Porter had found "float" ore on the claim was made known to the plaintiffs before they made the deed for the claim. Such purely surface indications, open to all ordinary observers, and situated on or near the path along [580] which the plaintiffs traveled in going to and from their work, must have been known to them, and are not such as to be made the subject of concealment and misrepresentation. The fact, however, that there was no such discovery of an actual vein or body of ore demonstrates that there could have been no such fraudulent and collusive concealment and misrepresentation, as to its limit and extent, as is charged in this complaint. It required not only a considerable excavation, but also a great outlay of money and great labor on the part of the defendant to develop the existence of a vein of ore.

This virtually disposes of both propositions advanced by the plaintiffs in support of their contention. That the defendant paid Porter $1,000, there is no question. But that such sum was paid to him to conceal from the plaintiffs his knowledge of the existence of a large ore body on the claim could not have been true; for the findings state that he possessed no such knowledge. It is presumable that the plaintiffs, as men of ordinary intelligence, must have known that Porter was to receive from the defendant, or his agent, Wall, a commission for his work in the transactions connected with the sale of the mine; for the findings show that they did not pay him anything out of the sum received from such sale, as their agent, and informed him beforehand that while they were willing to sell the claim for $2,000, in that case they could not allow him any commission. It really could make no difference to the plaintiffs what he was paid, since they received for the claim all they had asked for it, and in reality $200 more than they had, a few hours before, agreed to take, and within $50 of what they would have got if Porter had made the sale under their first agreement with him.

There are no other features of the case that call for special mention. In no aspect of it do we think either the law or the equities are with the plaintiffs.

The judgment of the Supreme Court of Idaho is, therefore, affirmed.

[655] THE DISTRICT OF COLUMBIA, *Appt.*,
v.
THOMAS W. CORNELL.

(See S. C. Reporter's ed. 655-661.)

Cancellation of negotiable instrument—effect of erasing cancellation and reissuing — certificates of indebtedness of District of Columbia.

1. When the maker of a negotiable instrument lawfully cancels it before maturity, his liability upon it is extinguished, and cannot be revived without his consent.
2. It is immaterial whether the cancellation is by destroying the instrument, or by writing or stamping words or lines in ink upon its face, provided the instrument, in the condition in which he puts it, unequivocally shows that it has been canceled.
3. Where certificates of indebtedness of the District of Columbia, called sewer certificates, were redeemed and canceled by the proper officers by stamping across their face marks of cancellation as clear and permanent as the original signatures, the liability of the District upon them cannot be revived by its omission to take additional precaution against their being stolen and fraudulently restored to their original condition by effacing the marks of cancellation.
4. Such certificates were in no sense money or the equivalent of money and had no validity unless issued for a purpose authorized by law, and had not the character of commercial paper so as to render them, when fraudulently issued, valid in the hands of *bona fide* holders.

[No. 55.]

Submitted Nov. 1, 1888. Decided May 13, 1889.

APPEAL from a judgment of the Court of Claims against the District of Columbia, on stolen certificates of indebtedness which had been redeemed and canceled and the marks of cancellation erased. *Reversed.*

Reported below, 20 Ct. Cl. 229.

Statement by *Mr. Justice* **Gray:**

This was an appeal from a judgment of the Court of Claims against the District of Columbia for $7,750 and interest on certificates of indebtedness, commonly called sewer certificates, issued by the Board of Public Works of the District in the following form, with coupons attached:

DISTRICT OF COLUMBIA.

No. 1380.

Washington, July 1st, 1873.

This certifies that for work done under direction of the Board of Public Works, and chargeable to the private property adjoining and benefited thereby, there is due to the bearer Five Hundred Dollars, payable July 1st, 1876, with eight per centum interest, payable semi-annually, as per coupons attached. Issued in accordance with Act of Legislative Assembly; secured by pledge to the Commissioners of the Sinking Fund of assessments made in accordance with Act approved June 26, 1873, against private property benefited by improvements, and receivable in payment of such assessments.

Board of Public Works,
By James A. Magrude
Treasurer.

Countersigned:
Horace J. Frost,
For Commissioners of Sinking Fund.

Registered: George E. Baker, Comptroller.

Last six months' interest payable with certificate.

[656] The material facts, as found by the Court of Claims, were as follows:

On July 1, 1873, such certificates to the amount of about $2,000,000 were issued by the Board of Public Works, under an Act of the Legislative Assembly of the District of Columbia, approved June 26, 1873, and were paid out to contractors, jobbers and laborers, and soon became greatly depreciated in value, and were bought and sold by brokers and speculators.

After the creation of the board of audit by the Act of Congress of June 20, 1874, chap. 337, § 6, most of these certificates, including those in question, were presented to that board and redeemed as provided in that Act. 18 Stat. at L. 119.

The certificates so redeemed were canceled by stamping across the face in ink, with a ribbon stamp, the words "Canceled by the Board of Audit." They were then inclosed in jackets, tied up in bundles of fifty in numerical order, and placed on a shelf under the counter in a room in the Treasury Department, occupied by several clerks employed by the board. The fact of redemption was entered in a registry book.

After the redemption and cancellation of the certificates, and while they were in the custody of the board of audit, as above stated, they were stolen, in February or March, 1876, by one George H. Farnham, who was then a clerk in the employ of the board, and occupying a desk behind the counter under which the certificates were deposited, but whose duties were not connected with the redemption or care of the certificates.

By the use of detersive soap Farnham entirely removed from a large portion of the certificates the marks of cancellation. From other certificates, on which some ink marks still appeared, he cut off the coupons and pasted them over the partially effaced marks. In this condition no signs or marks of cancellation or redemption were visible on the certificates, but some of them still had a soiled or stained appearance.

The stolen certificates were sold by Farnham to brokers in Washington, and by them to one Ritchie, and by him to the claimant; and all the purchasers bought them for value, in good [657] faith, and without notice that they had been redeemed or canceled; and the certificates were then in the same condition, in respect of their appearance as to indicating signs or evidences of cancellation or redemption, as they were at the time they were first negotiated by Farnham, and as they are now.

The judgment of the Court of Claims in favor of the claimant was for the amount of such

certificates as were shown to have been so purchased by him before their maturity. 20 Ct. Cl. 229.

Messrs. **A. H. Garland,** *Atty-Gen.*, **R. A. Howard,** *Assist. Atty-Gen.*, and *W. I. Hill* for appellant.

Mr. **Samuel Shellabarger** and **J. M. Wilson** for appellee.

[658] *Mr. Justice* **Gray** delivered the opinion of the court:

When the maker of a negotiable instrument lawfully cancels it before maturity, his liability upon it is extinguished, and cannot be revived without his consent. It is immaterial whether the cancellation is by destroying the instrument, or by writing or stamping words or lines in ink upon its face, provided the instrument, in the condition in which he puts it, unequivocally shows that it has been canceled. *Scholey* v. *Ramsbottom*, 2 Camp. 485; *Burbridge* v. *Manners*, 3 Camp. 193; *Ingham* v. *Primrose*, 7 C. B. N. S. 82, 86; *Yglesias* v. *Mercantile Bank*, L. R. 3 C. P. Div. 60.

[659]

In *Burbridge* v. *Manners*, *Lord* Ellenborough said: "It is the duty of bankers to make some memorandum on bills and notes which have been paid,"—clearly indicating his opinion that the making of such a memorandum upon the securities would be sufficient to protect the bankers from being afterwards held liable to any holder thereof.

The decision in *Ingham* v. *Primrose*, holding the acceptor of a bill of exchange, who had torn it in halves and thrown the pieces into the street, liable to one who afterwards took it, in good faith and for value, from one who had picked it up and pasted the pieces together, proceeded upon the ground that the tearing of the bill into two pieces, as manifest on its face, "was at least as consistent with its having been divided into two for the purpose of safer transmission by the post, as with its having been torn for the purpose of annulling it." And the decision can be maintained, if at all, on that ground only. *Baxendale* v. *Bennett*, L. R. 3 Q. B. Div. 525, 532.

In *Baxendale* v. *Bennett*, one who had given his blank acceptance on stamped paper to another and authorized him to fill in his own name as drawer, and received it back from him unfilled, and put it in the unlocked drawer of his desk, from which it was afterwards stolen, and filled up, without his authority, by inserting the name of another person as drawer, was held not liable to an indorsee for value.

In *State* v. *Wells, Fargo & Co.* 15 Cal. 336, cited by the claimant, treasury warrants of the State of California had been once lawfully issued, presented and paid, but never canceled in any way before they were stolen and again put in circulation; and the suit was not upon the warrants, but was brought by the State against *bona fide* holders who had presented them a second time, and to recover back the value of bonds which the State had delivered to them in exchange for the warrants, and which they, in good faith, had since parted with.

Much reliance was placed by the claimant upon the case of *Cooke* v. *United States*, 91 U. S. 389 [23: 237], in which the United States were held by a majority of this court to be liable to a *bona fide* holder of interest bearing treasury notes, printed by the Treasury Department from genuine plates, and perfect in form, complete and ready for issue, and never issued by any authorized officer, but fraudulently or surreptitiously put in circulation. In the opinion, much stress was laid upon the considerations that the notes, were perfect and complete as soon as printed, and did not require the signature of any officer, but, as soon as they had received the impression of all the plates and dies necessary to perfect their form, were ready for circulation and use; that in this respect they did not differ from coins of the mint when fully stamped and prepared for issue; and that these notes were intended to circulate and take the place of money, to some extent, for commercial purposes; were made a legal tender for their face value, exclusive of interest, as between the Government and its creditors, and passed readily from hand to hand as, or in lieu of, money. 91 U. S. 404 [23: 245].

[660]

We are not prepared to extend the scope of that decision, and the facts of this case, as found by the Court of Claims, are quite different.

The certificates in suit, after they had been redeemed according to law, were canceled by the proper officers, by distinctly stamping in ink across the face words stating that fact, and in that condition were made up in bundles and put away on a shelf, whence they were afterwards stolen by a clerk, who had no duty or authority connected with their redemption or care, and who afterwards fraudulently effaced the marks of cancellation, by the use of detersive soap, and by pasting coupons over them, and then put the certificates in circulation.

The provision of the Act of Congress of March 3, 1875, chap. 162, § 16, by which certain officers of the District of Columbia are required to destroy by burning all redeemed certificates, is in terms and effect merely directory, and does not make the District liable on such certificates fraudulently put in circulation, after they have been otherwise unmistakably canceled. 18 Stat. at L. 505.

These certificates having been lawfully extinguished by stamping across their face marks of cancellation as clear and permanent as the original signatures, the liability of the District upon them as negotiable paper could not be revived by its omission to take additional precautions against their being stolen and fraudulently restored to their original condition by such means as ingenious wickedness might devise. [661]

Moreover, these certificates were in no sense money or the equivalent of money. Though negotiable instruments, they belonged to a peculiar class of such instruments, being made by a municipal corporation, and having no validity unless issued for a purpose authorized by law, and as to which this court has repeatedly laid down and acted on the following rule: "Vouchers for money due, certificates of indebtedness for services rendered, or for property furnished for the use of the city, orders or drafts drawn by one city officer upon another, or any other device of the kind, used for liquidating the amounts legitimately due to public creditors, are of course necessary instruments for carrying on the machinery of municipal

administration, and for anticipating the collection of taxes. But to invest such documents with the character and incidents of commercial paper, so as to render them in the hands of *bona fide* holders absolute obligations to pay, however irregularly or fraudulently issued, is an abuse of their true character and purpose." *Nashville* v. *Ray*, 86 U. S. 19 Wall. 468, 477 [22: 164, 169]; *Wall* v. *Monroe County*, 103 U. S. 74, 78 [26: 430, 432]; *Claiborne County* v. *Brooks*, 111 U. S. 400, 408 [28: 470, 473].

Considering the nature of these certificates, the method in which they had been canceled, and the means by which they were afterwards put in circulation, we are of opinion that there is no ground for holding the District of Columbia liable to this claimant.

Judgment reversed.

---

[565] THE UNION TRUST COMPANY OF NEW YORK, *Appt.*,

v.

THE SOUTHERN INLAND NAVIGATION AND IMPROVEMENT COMPANY ET AL.

(See S. C. Reporter's ed. 565–572.)

Deed, made in violation of injunction—lis pendens—*effect of on purchase—collateral proceeding—improvement fund of Florida.*

1. A deed, made in violation of an injunction, previously issued and served, is subject to the decree subsequently rendered, in the suit in which the injunction was granted.

2. All persons dealing with property are bound to take notice of a suit pending with regard to the title thereto, and will, on their peril, purchase the same from any of the parties to the suit.

3. A *lis pendens*, duly prosecuted, and not collusive, is notice to a purchaser so as to affect and bind his interest by the decree; and the *lis pendens* begins from the service of the subpena after the bill is filed.

4. A decree, although erroneous but not void, cannot be questioned in a collateral proceeding.

5. The trustees of the internal improvement fund of the State of Florida are merely agents for the State, invested with the legal title of the lands for their more convenient administration; and the State remains the beneficial proprietor, subject to the guaranties which have been made to the holders of railroad bonds secured thereby.

[No. 191.]

Argued March 11, 12, 1889. Decided April 22, 1889.

APPEAL from a decree of the Circuit Court of the United States for the Northern District of Florida, dismissing a suit to adjudge that the trustees of the internal improvement fund of the State of Florida have no right in the land embraced in a mortgage, and that said lands are subject to said mortgage, and that the property so mortgaged be sold to pay bonds secured by the mortgage. *Affirmed.*

The facts are stated in the opinion.

Messrs. William Fullerton and **J. C. Cooper** for appellant.

Mr. **Wayne MacVeagh** for appellees.

[566] *Mr. Justice* **Harlan** delivered the opinion of the court:

This suit arises out of certain transactions connected with the execution of the Act of the General Assembly of Florida, approved January 6, 1855, providing for and encouraging a liberal system of internal improvements in that State. Laws of Florida, 1855, chap. 610. By that Act, so much of the five hundred thousand acres of land granted to Florida by the Act of Congress of March 3, 1845, as remained unsold; the proceeds of the sale of such as were on hand and unappropriated; all proceeds thereafter accruing from similar sales; and all the swamp lands or lands subject to overflow, granted to Florida by the Act of Congress approved September 28, 1850, with all the proceeds accrued and to accrue from their sale, were set apart and declared a distinct and separate fund, to be called "The Internal Improvement Fund of the State of Florida." The general object and scope of the Act are stated in *Florida* v. *Anderson*, 91 U. S. 667, 670, 676 [23: 290, 294, 297], where it was said that these lands and their proceeds "were vested in the Governor, the comptroller, treasurer, attorney-general, and register of state lands, and their [567] successors in office, in trust to dispose of the same and invest their proceeds, with power to pledge the fund for the payment of the interest on the bonds (to the extent of $10,000 per mile) which might be issued by any railroad companies constructing roads on certain lines indicated by the Act. The companies, after completing their roads, were to pay, besides interest on their bonds, one per cent per annum on the amount thereof, to form a sinking fund for the ultimate payment of the principal. The Act declared that the bonds should constitute a first lien or mortgage on the roads, their equipment and franchises; and upon a failure on the part of any railroad company accepting the Act to provide the interest and the payments to the sinking fund as required thereby, it was made the duty of the trustees to take possession of the railroad and all its property, and advertise the same for sale at public auction." In the same case it was said that the trustees are merely agents of the State, invested with the legal title of the lands for their more convenient administration; and that the State remains in every respect the beneficial proprietor, subject to the guaranties which have been made to the holders of railroad bonds secured thereby. See also *Florida Cent. R. Co.* v. *Schutte*, 103 U. S. 118 [26: 327]; *Littlefield* v. *Improvement Fund Trustees*, 117 U. S. 419 [29: 930]; *Vose* v. *Reed*, 1 Woods, 647; *Vose* v. *Trustees of Improvement Fund*, 2 Woods, 647.

On the third of November, 1870, Francis Vose brought a suit in equity in the Circuit Court of the United States for the Northern District of Florida, against said trustees and others. Among the defendants were the Florida Canal and Inland Transportation Company, the Southern Inland Navigation Company (described in some parts of the bill and in some of the interrogatories annexed as the Southern Inland Navigation and Improvement Company), the New York and Florida Lumber, Land and Improvement Company, and M. S. Mickles, agent of the last named company. The object of that suit was to obtain an injunction and decree protecting the Internal Improvement Fund against waste and misappropriation by the trustees, to the injury of Vose and others, who held [568] unpaid bonds issued by the Florida Railroad

Company in conformity with the Act of 1855. The bill charged that the trustees had violated the law of their trust by misappropriating money received by them, leaving unpaid past-due coupons, by neglecting to collect the amount due the sinking fund created by the Act of 1855, and by illegally conveying millions of acres of land to corporations that had no right to receive them, and that unless restrained they would continue to waste and misapply, to the irreparable injury of the plaintiff, Vose, and others, the fund intrusted to them for the use and purposes indicated in the Act. Among other allegations in the bill was one to the effect that "on the 28th day of July, 1868, the said trustees, by resolution of that date, attempted to secure to the said Southern Inland Navigation and Improvement Company forty thousand acres, or thereabouts, of the said trust lands, and that about the first of March, 1870, they entered into an agreement with the said New York and Florida Lumber, Land and Improvement Company, by which they undertook to convey one million one hundred thousand acres of the same for the nominal price of 10 cents an acre, and that this vast domain was and is to be selected from the most valuable of the said trust lands."

On the 6th of December, 1870, the circuit court issued an injunction to the trustees and their successors, commanding them, among other things, to desist "from selling or donating or disposing of the land belonging to said trust, otherwise than in strict accordance with the provisions of said Act of 1855," and "from selling said lands for scrip or state warrants of any kind, or for aught other than current money of the United States." This injunction was duly served upon the trustees within a few days after it was issued.

On the 6th of February, 1871, an order was made reciting the service of subpena in chancery upon the "defendants" in conformity with the rules and practice of the court, and the bill was taken for confessed (except as to the defendant Walker) for want of an answer, plea or demurrer. The Trustees of the Internal Improvement Fund subsequently appeared and were permitted to file their answer, controverting the principal allegations of the bill. On [569] the 10th of February, 1871, four days after the bill had been taken for confessed, a majority of the trustees, "for and in the consideration of the sum of one dollar to them in hand paid," conveyed to the Southern Inland Navigation and Improvement Company one million three hundred and sixty thousand six hundred acres of land; and, shortly thereafter, March 20, 1871, the latter company mortgaged the above and other lands obtained from the trustees of the Internal Improvement Fund, to secure the payment of bonds for a very large amount which the mortgagor company proposed to issue.

By a decree, rendered December 4, 1873, in the suit brought by Vose, it was among other things adjudged that "The contracts or agreements, entered into by the Trustees of the Internal Improvement Fund, with the corporation known as the Southern Inland Navigation and Improvement Company, be rescinded, and the same are hereby declared to be null and void; and the lands undertaken to be conveyed or contracted to be conveyed shall be restored to the said internal improvement fund, and be subjected to sale by the agents appointed by decree of this court, rendered during the term in accordance with the provisions of said decree."

Subsequently, in May, 1875, the Southern Inland Navigation and Improvement company filed its petition in the Vose suit, praying that the decree of December 4, 1873, be vacated, and it be permitted to file such pleadings as were necessary for the defense of its interests. The grounds upon which this relief was asked were that the company had not been made a party to the suit nor served with a subpena. These grounds were controverted in an answer filed by Vose to the petition. The questions thus raised were heard by *Mr. Justice* Bradley, March 26, 1877, who found that the Southern Inland Navigation and Improvement Company was duly made a party to the bill filed by Vose, was served with process of subpena thereon, and failed and neglected to appear and answer the bill. Its prayer to vacate the order or decree of December 4, 1873, and permit it to file necessary pleadings in that suit was denied.

The present suit was instituted April 12, [570] 1883, by the Union Trust Company of New York, against the Southern Inland Navigation and Improvement Company and the Trustees of the Internal Improvement Fund. Its object is to obtain a decree adjudging that the said trustees have no right, title or interest in the lands embraced in the mortgage of February 10, 1871; that the same are subject to said mortgage; and that the property so mortgaged be sold to pay the amount found to be due upon any outstanding bonds secured by that mortgage. The principal defense rests upon the above proceedings, orders and decrees in the Vose suit. The bill was dismissed with costs, and from the decree of dismissal the present appeal was prosecuted.

The argument at the bar covered several questions of an interesting character, which we do not deem it necessary to determine, as the decree below must be affirmed upon the ground that the deed of February 10, 1871, by the Trustees of the Internal Improvement Fund to the Southern Inland Navigation and Improvement Company—under which deed the present plaintiff, as mortgagee of the grantee, claims title—was made in violation of the injunction previously issued and served upon said trustees in the suit instituted by Vose. That suit, as we have seen, had for its object the protection of the rights of Vose and other holders of railroad bonds in the lands and money under the control of the Trustees of the Internal Improvement Fund. The injunction bound the trustees, and they and all other parties to the suit, who were before the court, were concluded by the decree subsequently rendered in respect to the disposition of the lands that were the subject matter of the litigation. In *County of Warren* v. *Marcy*, 97 U. S. 96, 105 [24: 977, 980], it was said to be a general rule that "All persons dealing with property are bound to take notice of a suit pending with regard to the title thereto, and will, on their peril, purchase the same from any of the parties to the suit." While this rule was said not to apply to negotiable securities, purchased before maturity,

nor to articles of ordinary commerce sold in the usual way, it was held to be applicable in cases relating to land. And in support of this [571] view was cited the case of *Murray* v. *Ballou*, 1 Johns. Ch. 566, in which *Chancellor* Kent laid it down as an established rule that "A *lis pendens*, duly prosecuted, and not collusive, is notice to a purchaser so as to affect and bind his interest by the decree; and the *lis pendens* begins from the service of the subpena after the bill is filed." Here the Southern Inland Navigation and Improvement Company accepted a conveyance of the lands in question from the Trustees of the Internal Improvement Fund, after service of the subpena, and a copy of the injunction, upon the trustees, its grantors. That company, therefore, took its titles *pendente lite*, and its mortgagee, the Union Trust Company, was bound by the final decree rendered in the case to the same extent that it is bound.

It is, however, suggested that the Southern Inland Navigation and Improvement Company was not a party to the Vose suit, and consequently was not bound by that part of the decree of December 4, 1878, adjudging that the contracts or agreements entered into by the trustees with that company "be rescinded, and the same are declared null and void, and the lands undertaken to be conveyed, or contracted to be conveyed, shall be restored to the said Internal Improvement Fund, and be subjected to sale by the agents appointed by the court." To this suggestion there are two answers: *First*. The question whether the Southern Navigation and Improvement Company was a party defendant to the Vose suit, and therefore affected by the decree *pro confesso*, passed February 6, 1871, was determined adversely to it by the order of March 26, 1877, denying its application to have the order of December 4, 1878, set aside. From the order of March 26, 1877, no appeal was prosecuted; and in this collateral proceeding that order is to be taken as conclusively establishing the fact that the Southern Inland Navigation Company was a party to the Vose suit, was served with process of subpena therein, and neglected to appear and answer the bill. *Second*. The relief granted in the Vose suit in respect to the agreement or contracts which the Southern Inland Navigation and Improvement Company claimed to have with the Trustees of the Internal Improvement Fund was within the general scope of [572] that suit, and was fairly covered by the prayer for such relief as might be deemed just and equitable. Besides, if that company was a party to the Vose suit, and we have seen that it was, the decree, so far as it rescinds the agreement or contracts it had with the trustees, and restores to the Internal Improvement Fund the lands covered by these contracts, was not void. If erroneous, it could only be avoided by an appeal. It cannot be questioned in this collateral proceeding.

It results from what has been said that the conveyance by the trustees to the Southern Inland Navigation Company was subject to such decree as the court might render in the Vose suit; and as the decree of December 4, 1878, rescinded the agreements which the latter had with the former in respect to lands constituting a part of the trust fund, and restored to that fund the lands conveyed, or attempted to be conveyed, to that company by the trustees, the conveyance of February 10, 1871, and the mortgage of March 20, 1871, based upon it, is invalid as against the present Trustees of the Internal Improvement Fund of Florida. *Decree affirmed.*

GEORGE D. HULING ET AL., *Plffs. in Err.*, [559]

v.

THE KAW VALLEY RAILWAY AND IMPROVEMENT COMPANY.

(See S. C. Reporter's ed. 559-565.)

Lands taken for railroad in Kansas—sufficiency of notice—nonresident owner, when bound—duty of owner—publication of notice—due process of law—objection to commissioner.

1. A notice, given by commissioners appointed to locate a railroad and assess damages for lands taken in its construction under the statute of Kansas, notifying all persons owning land on the line of the railroad in a certain section and township that the commissioners would proceed to lay out the route for said road through said section and assess the damages, is sufficient notice to the land owners.

2. The publication of such notice in the manner required by the statute is sufficient to subject the lands to the action of the commissioners and to warn the owners of property to appear and defend their interests.

3. The owner of real estate who is a nonresident, of the State within which the property lies, cannot evade the duties and obligations which the law imposes upon him in regard to such property by his absence from the State.

4. It is the duty of the owner of the real estate who is a nonresident, to take measures that, in some way, he shall be represented when his property is called into requisition; and if he fails to do this and fails to get notice by the publication required in such cases, it is his misfortune and he must abide the consequences.

5. Such publication is due process of law, as applied to this class of cases.

6. The objection that one of the commissioners was not a freeholder cannot avail to defeat the proceeding; such objection should be made either at the time of his appointment or at the time he proceeded to act as commissioner.

[No. 230.]

Argued April 1, 2, 1889. Decided April 22, 1889.

IN ERROR to the Circuit Court of the United States for the District of Kansas, to review a judgment for defendant in an action against a railway company to recover for the value of land taken for its right of way and for damages incident to the taking. *Affirmed.*

The facts are stated in the opinion.

Messrs. Albert Young and **Eppa Hunton**, for plaintiffs in error:

The pretended notice lacks all the elements necessary to afford information to the parties affected, and is no notice and void.

2 Story, Eq. Jur. § 400; *Vail* v. *Morris & E. R. Co.* 21 N. J. L. 189; *Chicago & A. R. Co.* v. *Smith*, 78 Ill. 98; *Re New York Cent. & H. R. R. Co.* 70 N. Y. 191; *Clark* v. *Elizabeth*, 37 N. J. L. 120; *State* v. *Plainfield*, 38 N. J. L. 95; *Strang* v. *Beloit & M. R. Co.* 16 Wis. 635; *State* v. *Perth Amboy*, 29 N. J. L. 259; *Peoria & R. I. R. Co.* v. *Warner*, 61 Ill. 52; 2 Desty, Taxn. 826; *Eastman* v. *Little*, 5 N. H. 290; *Farnum* v. *Buffum*, 4 Cush. 260; *Kitsmiller* v. *Kitchen*, 24 Iowa, 163; *Corbin* v. *Young*, 24 Kan. 198.

The notice is not "due process of law" as

guaranteed by the 14th Amendment to the Federal Constitution.

Davidson v. *New Orleans*, 96 U. S. 97-104 (24:616-619); *Hurtado* v. *Cal.* 110 U. S. 516-525 (28:232-235); *Hagar* v. *Reclamation Dist. No. 108*, 111 U. S. 701 (28:569); *Mulligan* v. *Smith*, 59 Cal. 206-230.

The court should have permitted the plaintiffs to show that one of the commissioners was not a freeholder and therefore disqualified to act.

Harris v. *Hardeman*, 55 U. S. 14 How. 334 (14:444); *Thompson* v. *Whitman*, 85 U. S. 18 Wall. 457 (21:897); *Ex parte Lange*, 85 U. S. 18 Wall. 163 (21:872); *Windsor* v. *McVeigh*, 93 U. S. 274 (23:914); Cooley, Const. Lim. 5th ed. 502; 2 Whart. Ev. §§ 796-928; Freeman, Judgm. 3d ed. § 563 and notes; *Mastin* v. *Gray*, 19 Kan. 458; *Oliphant* v. *Atchison County*, 18 Kan. 386-398.

Proceedings to deprive an individual of his property must be conducted in strict conformity to the requirements of the statute which authorizes them.

Cooley, Const. Lim. 5th ed. 654; 2 Dillon, Mun. Corp. § 607; Mills, Em. Dom. § 227; *Daggy* v. *Green*, 12 Ind. 303; *State* v. *Jersey City*, 25 N. J. L. 309; *Rock Island & A. R. Co.* v. *Lynch*, 23 Ill. 645; *Moore* v. *Superior & St. C. R. Co.* 34 Wis. 178; *Nichols* v. *Bridgeport*, 23 Coun. 189; *People* v. *Brighton*, 20 Mich. 57.

Essentials to constitute a freeholder.

2 Washb. Real Prop. 4th ed. 23-71; *People* v. *Hynds*, 30 N. Y. 473; *Exentine* v. *Morris*, 8 Mo. App. 387-8; *Gage* v. *Scales*, 100 Ill. 221. *Bradford* v. *State*, 15 Ind. 347-353; *Clippinger* v. *Creps*, 2 Watts, 45; *New Orleans, J. & G. N. R. Co.* v. *Hemphill*, 35 Miss. 17; *Aaron* v. *State*, 37 Ala. 106; *State* v. *Ragland*, 75 N. C. 12.

The appraisement is a nullity and *coram non judice*.

Mills, Em. Dom. §§ 251-256; *Rock Island & A. R. Co.* v. *Lynch*, 23 Ill. 645; *Re Broad St. Road*, 7 Serg. & R. 444; *Re Wells Co. Road*, 7 Ohio St. 16; *Reg.* v. *Justices of Suffolk*, 18 Q. B. 416-21; *Daggy* v. *Green*, 12 Ind. 303; *Taylor* v. *Worcester Co.* 105 Mass. 225; *People* v. *Seward Highway Comrs.* 27 Barb. 94; *Wood* v. *Phelps Co. Ct.* 28 Mo. 119.

Messrs. **George W. McCrary** and **Wallace Pratt**, for defendant in error:

The condemnation proceedings were in strict accordance with the statute of Kansas as upheld and construed by the supreme court of that State.

Mo. River, Ft. S. & G. R. Co. v. *Shepard*, 9 Kan. 647; *Challiss* v. *Atchison, T. & S. F. R. Co.* 16 Kan. 117; *Memphis, K. & C. R. Co.* v. *Parsons Town Co.* 26 Kan. 503; *Central Branch U. P. R. Co.* v. *Atchison, T. & S. F. R. Co.* 26 Kan. 669, 28 Kan. 453.

The said statute of Kansas providing for condemnation proceedings is not in contravention of the 14th Amendment to the Constitution of the United States.

Secombe v. *Milwaukee & St. P. R. Co.* 90 U. S. 23 Wall. 108 (23:67); *Scott* v. *Toledo*, 4 Ry. & Corp. L. J. 532; Cooley, Const. Lim. 5th ed. 435; *Murray* v. *Hoboken Land & Imp. Co.* 59 U. S. 18 How. 272 (15:372); *Pearson* v. *Yewdall*, 95 U. S. 294 (24:436); *Pennoyer* v. *Neff*, 95 U. S. 722, 742, 743 (24:568, 576); *Mississippi & R. R. Boom Co.* v. *Patterson*, 98 U. S. 403-406 (25:206, 207); *Spencer* v. *Merchant*, 125 U. S. 345, 355-356 (31:763, 767); *Hagar* v *Reclamation Dist. No. 108*, 111 U. S. 701 (28:569); *Davidson* v. *New Orleans*, 96 U. S. 97 (24:616).

It was not competent for the plaintiffs in this collateral proceeding to contradict that the commissioners were freeholders and residents of Wyandotte County, Kansas.

Leavenworth Co. v. *Espen*, 12 Kan. 531; *Venard* v. *Cross*, 8 Kan. 248; *Beebe* v. *Scheidt*, 13 Ohio St. 406; *Chicago, B. & Q. R. Co.* v. *Chamberlain*, 84 Ill. 333; *State* v. *Barlow*, 61 Iowa, 572; *Bailey* v. *McCain*, 92 Ill. 277.

The notice given under the statute was sufficent to bind all persons interested in the land.

State v. *Wilson*, 17 Wis. 687, 691, 692; *Williams* v. *Mitchell*, 49 Wis. 284; *State* v. *Nelson*, 57 Wis. 147, 154; *Brock* v. *Hishen*, 40 Wis. 674, 679; *Bradley* v. *Frankfort*, 99 Ind. 417; *Burnham* v. *Goffstown*, 50 N. H. 560; *Re Hilltown Road*, 18 Pa. 233; *Re Road in Allen Twp.* 18 Pa. 463.

Mr. Justice **Miller** delivered the opinion of the court:

This action was brought in the court below by the plaintiffs in error against the Kaw Valley Railway and Improvement Company, as defendant, in the nature of an action of trespass on land. It was in fact to recover for the value of land taken by the railroad for its right of way, and for damages to adjacent lands, houses, fences, and property, incident to the taking. The land was a part of a quarter section in Jackson Township, Wyandotte County, Kansas. The railway company answered by setting up proceedings which they had taken under the laws of Kansas for the condemnation of the land for the use of the railroad, and the payment of $725 into the treasury of that county in accordance with law, that being the amount which the commissioners who conducted the condemnation proceedings had allowed the plaintiffs. The defendants set out these proceedings in full, and relied upon them, as a sufficient defense for taking possession of and using the land. [560]

The parties waived a jury, and the case was tried by the court, who found for the defendant, the railway company, and entered a judgment against the plaintiffs for the costs. We are called upon to review that judgment.

The record of the case is a very singular one, as there is no special finding of facts by the court, but a general finding in favor of the defendants. Instead, however, of a finding of facts, there is a bill of exceptions, which itself contains the entire history of the case, including the pleadings, the motions, the evidence, the judgment of the court, and all that is in the record besides. The only point raised by this bill of exceptions was as to the admission of the testimony of L. H. Wood, who acted as one of the commissioners by appointment of the District Judge of Wyandotte County, in which the land lay. The deposition of Wood was directed to the question whether he was a freeholder of Wyandotte County; and although he declared that at the time he was appointed as commissioner he was the owner of considerable real estate, upon further examination he stated that the title to it was in some other person, who held it as trustee for him. This attempt to raise

the question of whether he was a freeholder within the meaning of the statute of Kansas on that subject was ruled out entirely by the exclusion of all his testimony on the trial; and this constitutes the principal assignment of error in the case.

Article 9 of chapter 23 of the Compiled Laws of Kansas, page 224, entitled "Appropriation of Lands for the Use of Railway and Other Corporations," provides two modes of doing this. The first of these modes is by an application to the board of county commissioners, which is the governing body of the county, to lay off along the line of the proposed road as located by the company a route for such railroad. Upon this application being made in writing, the [561] board of county commissioners shall forthwith proceed to lay off such route, and have the same carefully surveyed, and appraise the value and assess the damages to the interest of each of the of the owners of the land so taken; all of which they shall embody in a written report and file it in the office of the county clerk in such county. The county clerk shall immediately file a copy of this report in the office of the treasurer of the county; and, if the company shall pay the amount of this appraisement into the treasurer's office, this shall be certified upon the copy of the report under his hand and seal of office, and he shall pay over the amounts to the persons, respectively, entitled to them. Upon the filing of a copy of this report, and a certificate of the payment of the money, in the office of the register of deeds for the proper county, the company shall have the right to occupy the lands so embraced within such route for the purposes necessary for the construction and use of its road. These proceedings, it is declared, shall vest in the company, its successors and assigns, the perpetual use of the lands as soon as the railroad has been constructed.

Section 86 of this article provides that before the county commissioners shall proceed to lay off any railroad route, notice of the time when the same shall be commenced shall be given by publication, thirty days before the time fixed, in some newspaper published in the county. It also provides that an appeal may be had from the determination of the board of county commissioners as to the value of the lands, and other damages to the district court of the county, which appeal shall only affect the amount of compensation to be allowed, but shall not delay the prosecution of the work, if the company shall pay the amount as aforesaid and execute a bond with sufficient security to pay all damages which may be adjudged to be paid by the said court.

Another mode of appropriating this land, by the exercise of the right of eminent domain, for the use of railroads, is provided by section 87 of the same article. In this case, the railroad company, instead of applying to the board of county commissioners, may apply to the [562] judge of the district court of the county through which the railroad is to be built, who shall appoint three commissioners, who shall be freeholders and residents of the county, to make the location, appraisement and assessment of damages, instead of the county commissioners. This appointment shall be made in writing under the hand of the district judge, upon the written application of the corporation or other persons, and the application for and certificate of appointment shall be recorded in the office of the register of deeds of the proper county. Such commissioners, being duly sworn, shall perform all their duties in the manner and under the same regulations and restrictions as are provided in the case where they are performed by the county commissioners, and the subsequent proceedings, including the right of appeal, shall be the same.

In the case now before us the proceeding was had under the latter provision of the statute. The transcript on its face seems to be regular in every particular, showing a full compliance with all the requirements of the statute on the subject. There was the proper publication made in the newspaper; and, indeed, so far as the face of the record is concerned, no objection seems to be made to it, except that it is very urgently argued that the notice published was not sufficient because it did not apprise the party of what land was to be taken; and, if in that respect it was a sufficient compliance with the statute, it is then insisted that the statute itself was void as authorizing the taking of private property without due process of law.

In regard to this objection, we do not see how the notice is deficient, if any notice short of one actually served upon the party can be sufficient. With regard to the description of the property, the notice gives all that could be known at the time it was published. As the commissioners had the power to determine the precise location of the road, that location could not be described with more precision than it is in the newspaper publication set out in the proceedings. It is directed to all persons owning lands on the line of the railroad as the same is now or may be located through section 23, township 11, range 25, in the County of Wyandotte and State of Kansas; and it [563] notified persons owning land in that section that the commissioners duly appointed would on Monday, the 22d of May, 1882, proceed to lay off the route for said road through said section and appraise the value and assess the damages to each quarter section through and over which the railroad might be located. To the plaintiffs in this case, who are the owners of a quarter section of land in section 23 of that township, this was a sufficient warning that the road might run through their land at that point, and sufficient notice of the time and place where this matter would be determined, as also the amount to which they would be entitled for the appropriation of their land. If this notice had been read by the plaintiffs, it was a clear and distinct notification to them that it would be determined at that time whether any, and how much, of their land in section 23 would be taken for the railroad, and the value to be set upon it by the commissioners; and we think that this was all the notice they had a right to require. Of course, the statute goes upon the presumption that, since all the parties cannot be served personally with such notice, the publication which is designed to meet the eyes of everybody, is to stand for such notice. The publication itself is sufficient if it had been in the form of a personal service upon the party himself within the county. Nor have we any doubt that this form of warning owners of prop-

erty to appear and defend their interest, where it is subject to demands for public use when authorized by statute, is sufficient to subject the property to the action of the tribunals appointed by proper authority to determine those matters.

The owner of real estate who is a nonresident of the State within which the property lies, cannot evade the duties and obligations which the law imposes upon him in regard to such property, by his absence from the State. Because he cannot be reached by some process of the courts of the State, which, of course, have no efficacy beyond their own borders, he cannot therefore hold his property exempt from the liabilities, duties, and obligations which the State has a right to impose upon such property; and in such cases some substituted form of notice has always been held to be a sufficient warning to the owner, of the proceedings which are being taken under the authority of the State to subject his property to those demands and obligations. Otherwise the burdens of taxation, and the liability of such property to be taken under the power of eminent domain, would be useless in regard to a very large amount of property in every State of the Union.

[564]

It is, therefore, the duty of the owner of real estate who is a nonresident, to take measures that in some way he shall be represented when his property is called into requisition; and if he fails to do this, and fails to get notice by the ordinary publications which have usually been required in such cases, it is his misfortune, and he must abide the consequences. Such publication is "due process of law" as applied to this class of cases. *Harvey* v. *Tyler*, 69 U. S. 2 Wall. 328 [17:871]; *Secombe* v. *Milwaukee & St. P. R. Co.* 90 U. S. 23 Wall. 108 [23:67]; *Pennoyer* v. *Neff*, 95 U. S. 722, 743, 744 [24:568, 576]; *Hagar* v. *Reclamation District*, 111 U. S. 701 [28:569]; *McMillen* v. *Anderson*, 95 U. S. 37 [24:335]; *Davidson* v. *New Orleans*, 96 U. S. 105 [24:620]; *Boom Co.* v. *Patterson*, 98 U. S. 403, 406 [25:206, 207].

Conceding that these proceedings subjected the land in controversy to the jurisdiction of the commissioners appointed by the District Judge of Wyandotte County, the question as to whether one of those commissioners was a freeholder or not is not open to consideration in this suit. The commissioners were regularly appointed by the proper officer, and took the proper oath, and have discharged their duties in the manner required by law. The railroad company has paid the money and taken possession of the land which was condemned by those commissioners. The plaintiffs cannot recover in the present action without a holding in this collateral proceeding that all that was done by those commissioners is void by reason of this want of qualification in one of their number. The proper time for these plaintiffs to have taken this objection to Mr. Wood as a commissioner was either at the time of his appointment, or at the time he proceeded to act as commissioner. If it be objected that they could not be supposed to have any notice of the application for the appointment of these commissioners, and of the time and place when the judge would act on that application, the law presumes that they had notice, and might have attended at the time the commissioners entered upon their duties. If this objection had been then taken, it might have been sustained, or it could have been taken by way of appeal from the proceedings of the commissioners; but to permit such an objection as this to prevail at this time, and thus defeat the whole of the proceedings upon this narrow ground, is a proposition unsupported by sound principle or by authority. It is a collateral attack upon a proceeding which has been completed according to the forms of law. There is no more reason why this want of qualification should, when shown at this stage of the proceeding, invalidate it all, than there is why the discovery, after a judgment and after that judgment has passed beyond the control of the court, that one of the jurors was disqualified, should make absolutely void the verdict and judgment. It is only one of those cases frequently occurring in the administration of the law, in which it is better that errors not pointed out at the proper time should be disregarded, than that, by attempts to correct them, evils much worse should follow than those incident to the error. *Comrs. of Leavenworth Co.* v. *Espen*, 12 Kan. 531; *Venard* v. *Cross*, 8 Kan. 248; *Cooper* v. *Reynolds*, 77 U. S. 10 Wall. 308 [19:931]; *Voorhees* v. *Bank of U. S.* 35 U. S. 10 Pet. 449 [9:490].

[565]

The judgment of the Circuit Court is affirmed.

ALEXANDER B. McKINLEY, *Plf. in Err.*, [630]

v.

JEROME B. WHEELER ET AL.

(See S. C. Reporter's ed. 630-637.)

Corporation may locate mining claim.

A corporation created under the laws of one of the States of the Union, all of whose members are citizens of the United States, is competent to locate or join in the location of a mining claim upon the public lands of the United States, in like manner as individual citizens.

[No. 233.]

Argued April 2, 1889. Decided May 13, 1889.

IN ERROR to the Circuit Court of the United States for the District of Colorado, to review a judgment sustaining a demurrer to the complaint in an action for the possession of an undivided half interest in a mining claim. *Reversed.*

The facts are stated in the opinion.

Messrs. Hugh Butler and **Wm. A. Maury** for plaintiff in error.

Messrs. C. S. Thomas and **T. M. Patterson** for defendants in error.

Mr. Justice **Field** delivered the opinion of the court:

This is an action for the possession of an undivided half interest in a mining claim known as the Vallejo lode, in the mining district of Roaring Forks, in the County of Pitkin, Colorado.

The plaintiff derives whatever interest he possesses by purchase and conveyance from the Josephine Mining and Prospecting Company, a corporation organized and existing under the laws of Colorado, for the purpose of prospecting for valuable mineral deposits in the public domain of the United States in that State.

[631] The Vallejo lode was discovered and located by that company and two persons named Charles Miller and James W. McGee, the location being in their joint name, one half interest for the benefit of Miller and McGee and the other half for the benefit of the members of the corporation. At the time of the discovery and location all the members of the corporation were citizens of the United States, and were severally and individually qualified and competent to enter upon the public domain and acquire title to mineral lands upon it by discovery and location.

The complaint, in addition to these facts, alleges that on the 11th of March, 1884, the plaintiff was and has since been the owner of an undivided half interest in the mining claim mentioned, which is described by metes and bounds as set forth in the original location certificate, and was then and has ever since been entitled to its possession; that on the 20th of October, 1884, the defendants entered upon the premises and wrongfully and unlawfully excluded the plaintiff therefrom, and have ever since thus excluded him, to his damage of one thousand dollars. He therefore prays judgment for the possession of an undivided half interest in the mining claim and for the damage alleged.

To this complaint, the material facts of which are set forth in two counts, the defendants demurred on several grounds, some of which are mere formal objections, but one of which is as follows: "Because the plaintiff bases his title or claim of ownership to an undivided one half of the said Vallejo lode mining claim upon a purchase and conveyance from the Josephine Mining Company, a locator of said claim; and that said company, whether a corporation or partnership, was and is incapable of originally locating a mining claim, in whole or in part, under the statutes of the United States or of the State of Colorado."

After argument the court sustained the demurrer, and entered judgment dismissing the action, with costs against the plaintiff, who has brought the case here on a writ of error.

As thus appears, the sole question presented for our determination is whether a corporation created under the laws of one of the States of the Union, all of whose members are citizens [632] of the United States, is competent to locate or join in the location of a mining claim upon the public lands of the United States, in like manner as individual citizens. The question must, of course, find its solution in the enactments of Congress.

Section 2319 of the Revised Statutes provides as follows:

"All valuable mineral deposits in lands belonging to the United States, both surveyed and unsurveyed, are hereby declared to be free and open to exploration and purchase, and the lands in which they are found, to occupation and purchase, by citizens of the United States and those who have declared their intention to become such, under regulations prescribed by law, and according to the local customs or rules of miners in the several mining districts, so far as the same are applicable and not inconsistent with the laws of the United States."

It will be observed that no prohibition is here made against citizens of the United States uniting together for the occupation and purchase of public lands containing "valuable mineral deposits." Nothing is said of partnerships or associations or corporations; it is to citizens that the privilege is granted, and that they may unite themselves in such modes in all other pursuits was, as a matter of course, well known to those who framed as well as to those who passed the statute. There was no occasion for special reference to the subject to give sanction to these modes of uniting means to explore for mineral deposits and to develop them when discovered. Many branches of mining, and those which yield the largest returns, can be carried on only by deep excavations in the earth and the use of powerful machinery, requiring expenditures generally far beyond the means of single individuals. In lode mining especially such excavations extend in most cases hundreds of feet, in many cases thousands of feet, into the earth, where, for successful working, the steam engine of great power is as essential an instrument as the pick and the shovel. It was expected, of course, that mining would continue after the passage of the Act as before. No change in that respect is needed or asked for. The object of the Act of May 10, 1872, from which the provisions of section 2319 were carried into the Revised Statutes, was "to promote the [633] development of the mining resources of the United States." It is so expressed in its title, and such development is sought to be promoted by indicating the manner in which claims to mines can be established, and their extent, and by offering a title to the original discoverer or locator who should develop the mine discovered and located, or to his assigns.

At the present day, nearly all enterprises for the prosecution of which large expenditures are required, are conducted by corporations. They occupy in such cases almost all branches of industry, and prosecute them by means of the united capital of their members with increased success. In many States they are formed under general laws, by a very simple proceeding;—by an instrument signed by the proposed members agreeing to thus unite themselves, stating their number, the object of their incorporation, the proposed capital, the number of shares, the period of duration, and the officers under whose direction their business is to be conducted. Such a document being acknowledged by the parties and filed in certain designated offices, a corporation is created. The facility with which they may be thus formed, and the convenience of thus associating a number of persons for business, have led to an enormous increase of their number. They are little more than aggregations of individuals united for some legitimate business, acting as a single body, with the power of succession in its members without dissolution. We think, therefore, that it would be a forced construction of the language of the section in question, if, because no special reference is made to corporations, a resort to that mode of uniting interests by different citizens was to be deemed prohibited. There is nothing in the nature of the grant or privilege conferred which would impose such a limitation. It is in that respect unlike grants of land for homesteads and settlement, indicating in such cases that the grant is intended only for individual citizens.

The development of the mineral wealth of the country is promoted, instead of retarded, by allowing miners thus to unite their means. This is evident from the fact that so soon as individual miners find the necessity of obtaining powerful machinery to develop their mines, [634] a corporation is formed by them; and it is well known that a very large portion of the patents for mining lands has been issued to corporations.

If we turn now to other provisions of the Revised Statutes we find that the conclusion which we have reached is justified by their language. Section 2321 provides as follows:

"Proof of citizenship, under this chapter, may consist, in the case of an individual, of his own affidavit thereof; in the case of an association of persons unincorporated, of the affidavit of their authorized agent, made on his own knowledge, or upon information and belief; and in the case of a corporation organized under the laws of the United States, or of any State or Territory thereof, by the filing of a certified copy of their charter or certificate of incorporation."

Again, section 2325, in stating the manner and conditions under which a patent for a mining claim may be obtained, provides as follows:

"A patent for any land claimed and located for valuable deposits may be obtained in the following manner: Any person, association, or corporation authorized to locate a claim under this chapter, having claimed and located a piece of land for such purposes, who has or have complied with the terms of this chapter, may file in the proper land office an application for patent, under oath, showing such compliance," etc.

It will be thus seen that the statute itself assumes, what one would naturally infer without reference to it, that citizens of the United States are permitted to enjoy the privilege which is granted to them in their individual capacity, though they may unite themselves into an association or corporation.

The doctrine is well established that rights with respect to property held by citizens are not lost because they unite themselves into corporate bodies. They are subsequently as able to invoke the law for the enforcement of their rights as previously, the courts in such cases looking through the name in order to protect those whom the name represents. We have an illustration of this, as applied to corporations, in the construction given to the clause of the Constitution which extends the judicial power of the United States to contro- [635] versies between citizens of the States and aliens, and between citizens of different States.

In *Bank of the United States* v. *Deveaux*, 9 U. S. 5 Cranch, 61, 87 [3: 38], the question arose whether a corporation composed of citizens of one State could sue in the Circuit Court of the United States a citizen of another State, and it was answered in the affirmative. In deciding the question, the court, speaking by *Chief Justice* Marshall, said: "However true the fact may be, that the tribunals of the States will administer justice as impartially as those of the nation, to parties of every description, it is not less true that the Constitution itself either entertains apprehensions on this subject, or views with such indulgence the possible fears and apprehensions of suitors that it has established national tribunals for the decision of controversies between aliens and a citizen, or between citizens of different States. Aliens, or citizens of different States, are not less susceptible of these apprehensions, nor can they be supposed to be less the objects of constitutional provision, because they are allowed to sue by a corporate name. That name, indeed, cannot be an alien or a citizen; but the persons whom it represents may be the one or the other; and the controversy is, in fact and in law, between those persons suing in their corporate character, by their corporate name, for a corporate right, and the individual against whom the suit may be instituted. Substantially and essentially the parties in such a case, where the members of the corporation are aliens, or citizens of a different State from the opposite party, come within the spirit and terms of the jurisdiction conferred by the Constitution on the national tribunals. Such has been the universal understanding on the subject. Repeatedly has this court decided causes between a corporation and an individual without feeling a doubt respecting its jurisdiction."

The doctrine of this case has been followed and is now the settled law in the courts of the United States. On the same principle, provisions of law, in terms applicable to persons, securing to them the enjoyment of their property or affording means for its protection, are held to embrace private corporations. The construction given to the 6th article of the definitive Treaty [636] of Peace of 1783 between Great Britian and the United States illustrates this. (8 Stat. at L. 83.) That article provided that there should be "no future confiscations made, nor any prosecutions commenced against any person or persons, for or by reason of the part which he or they may have taken in the present war; and that no person shall, on that account, suffer any future loss or damage either in his person, liberty, or property." An English corporation held in Vermont certain lands granted to it before the Revolution, and the Legislature of that State undertook to confiscate them and give them to the town where they were situated. The English corporation claimed the benefit of this article, and recovered the property, against the contention that the treaty applied only to natural persons, and could not embrace corporations because they were not persons who could take part in the war, or could be considered British subjects, this court, speaking by *Mr. Justice* Washington, observing that the argument proceeded upon an incorrect view of the subject, and referring to the case of the *Bank of the United States* v. *Deveaux*, to show that the court, when necessary, will look beyond the name of a corporation to the individuals whom it represents. *Society for the Propagation of the Gospel* v. *New Haven*, 21 U. S. 8 Wheat, 464, 491 [5: 662]. Many other illustrations of the doctrine might be cited.

We are of opinion that the same rule of construction should control in this case, and that, in accordance with it, section 2319 of the Revised Statutes must be held not to preclude a private corporation formed under the laws of a State, whose members are citizens of the

United States, from locating a mining claim on the public lands of the United States. There may be some question raised as to the extent of a claim which a corporation may be permitted to locate as an original discoverer. It may perhaps be treated as one person and entitled to locate only to the extent permitted to a single individual. That question, however, is not before us and does not call for an expression of opinion.

The objection to this construction arising from the fact that the section gives force, in the location of claims, to the rules and customs of miners, so far as applicable, when not in [637] conflict with the laws of the United States, does not strike us as of great weight. A corporation interested in mining may be represented by an officer or agent, at any meeting of miners called together to frame such rules and regulations in their mining district. Corporations engaged in other business are constantly represented in this way, at meetings called in relation to matters in which they are interested. There is nothing in the nature of mining to prevent such a representation of a corporation, when rules to control the acquisition and development of mines are to be considered and settled.

It follows that the judgment of the Court below must be reversed, and the cause remanded, with directions to overrule the demurrer of the defendants, and to take further proceedings in accordance with this opinion.

---

[637] P. P. PICKARD, Comptroller of the STATE OF TENNESSEE, *Appt.*

v.

THE EAST TENNESSEE, VIRGINIA AND GEORGIA RAILROAD COMPANY.

(See S. C. Reporter's ed. 637-642.)

Immunity from taxation—a personal privilege—not transferable—will not pass by sale of railroad and franchises—not a franchise.

1. Immunity from taxation is not in itself transferable.
2. Immunity from taxation may be granted; but it must be considered as a personal privilege not extending beyond the immediate grantee, unless otherwise so declared in express terms.
3. It will not pass merely by a conveyance of the property and franchises of a railroad company under a decree to enforce a lien, although such company may hold its property exempt from taxation.
4. Immunity from taxation is not a franchise of a railroad company which may be transferred, but is incapable of transfer without express statutory direction.

[No. 246.]

Argued April 12, 1889. Decided May 13, 1889.

APPEAL from a decree of the Circuit Court of the United States for the Middle District of Tennessee, enjoining the collection of certain taxes, assessed against a railroad company. *Reversed.*

The facts are stated in the opinion.

Messrs. **G. W. Pickle,** *Atty-Gen. of Tennessee, A. S. Marks* and *Vertrees & Vertrees,* for appellant:

Immunity from taxation is not a "privilege." *Wilson* v. *Gaines,* 9 Baxt. 546; *Memphis & C. R. Co.* v. *Gaines,* 8 Tenn. Ch. 604; *Miss. & T. R. Co.* v. *State,* cited in 9 Baxt. 549; *Nashville, C. & St. L. R. Co.* v. *Marion Co.* 7 Lea, 665; *Chesapeake & O. R. Co.* v. *Miller,* 114 U. S. 176 (29: 121).

This immunity from taxation never passed to any subsequent purchaser or owner of the road.

Tennessee Bond Cases, 114 U. S. 663 (29: 281); *East Tennessee, V. & G. R. Co.* v. *Hamblen Co.* 102 U. S. 273 (26: 152); *Memphis & C. R. Co* v. *Gaines,* 97 U. S. 712 (24: 1095); *Knoxville & O. R. Co.* v. *Hicks,* 9 Baxt. 442; *Morgan* v. *La.* 93 U. S. 217 (23: 860); *State* v. *Nashville, C. & St. L. R. Co.* 12 Lea, 584.

An exemption from taxation is a personal privilege of the corporation and perishes with it.

Memphis & L. R. R. Co. v. *Berry,* 112 U. S. 617 (28: 840); *Louisville & N. R. Co.* v. *Palmes,* 109 U. S. 244 (27: 922); *Wilson* v. *Gaines,* 103 U. S. 417 (26: 401); *Chicago, B. & K. C. R.* v. *Guffey,* 120 U. S. 575 (30: 734).

All legislative exemptions since 1870 are unconstitutional under the Tennessee Constitution of 1870.

Louisville & N. R. Co. v. *Palmes,* 109 U. S. 244 (27: 922); *St. Louis, I. M. & S. R. Co.* v. *Berry,* 113 U. S. 465 (28: 1055); *Burgess* v. *Seligman,* 107 U. S. 33 (27: 365); *Bucher* v. *Cheshire R. Co.* 125 U. S. 584 (31: 799); *Vicksburg, S. & P. R. Co.* v. *Dennis,* 116 U. S. 667 (29: 771).

Mr. **Wm. M. Baxter,** for appellee:

The exemption being property already in existence, and being one of the "privileges" of the railroad company which would give value to its railroad in the hands of a subsequent owner, the Legislature had the right to provide for a sale of the railroad with the incident attached. The property was already exempt, and it was merely to retain that quality after sale as before.

24 Fed. Rep. 616, 620-624; *Knoxville & O. R. Co.* v. *Hicks,* 9 Baxt. 442; *State* v. *Nashville, C. & St. L. R. Co.* 12 Lea, 584; *S. C.* 2 Pickle, 440; *Tenn* v. *Whitworth,* 117 U. S. 145 (29: 835), and cases cited.

This court will follow the decision of the state court upon question of what was sold and transferred by decrees in cases of *State* v. *Edgefield & K. R. Co.* 6 Lea, 353; *Burgess* v. *Seligman,* 107 U. S. 33-34 (27: 365); *Louisville & N. R. Co.* v. *Palmes,* 109 U. S. 255-256 (27: 926); *Bucher* v. *Cheshire R. Co.* 125 U. S. 582-583 (31: 798).

There is no *res judicata.* The cause of action is not the same as in the cases of *East Tenn., V. & G. R. Co.* v. *Hamblen Co.* 102 U. S. 273 (26: 152); 39 Am. Dec. 313; *Thompson* v. *Roberts,* 65 U. S. 24 How. 233 (16: 648); 50 Am. Dec. 680; *Russell* v. *Place,* 94 U. S. 606 (24: 214); 60 Am. Dec. 515; *Nichol* v. *Levy,* 72 U. S. 5 Wall. 433 (18: 596); *Re Howard,* 76 U. S. 9 Wall. 175 (19: 634); *Mutual Ben. L. Ins. Co.* v. *Tisdale,* 91 U. S. 241 (23: 316); *Humes* v. *Scruggs,* 94 U. S. 22 (24: 51); *Sessions* v. *Johnson,* 95 U. S. 347 (24: 596) *Morgan Co.* v. *Allen,* 103 U. S. 498 (26: 498); *Hale* v. *Finch,* 104 U. S. 261 (26: 732).

NOTE.—As to exemption from taxation: whether a contract or not; not implied; personal privilege, See note to Tucker v. Ferguson, 89 U. S., 22 L. ed. 805.

[638] *Mr. Justice* **Field** delivered the opinion of the court:

This is a suit to enjoin the collection of certain taxes for the years 1883 and 1884, assessed by the Board of Railroad Tax Assessors of Tennessee against the property of the complainant, the East Tennessee, Virginia and Georgia Railroad Company. The property formerly belonged to the Cincinnati, Cumberland Gap and Charleston Railroad Company; and the claim asserted by the bill is that the property, whilst held by that company, was exempt from taxation, and that such exemption has accompanied it in its transfer to the complainant. That company was incorporated by an Act of the Legislature of Tennessee, passed November 18, 1853. Among other things the Act provided that whenever the company should have completed its road from Cumberland Gap to the East Tennessee and Virginia Railroad, or to the southern boundary line of the State, it should "have all the rights and privileges" conferred by its charter for a period of ninety-nine years. (Acts of Tenn. 1853-4, chap. 301, § 6.) It also declared that the company should be vested, except as otherwise provided by its charter, with "all the rights, powers and privileges, and subject to all the restrictions and liabilities, of the Nashville and Louisville Railroad Company." An Act was passed by the Legislature of Tennessee on the 9th of February, 1850, to incorporate a company under this last name, which among other things declared "that the capital stock in the said company, the dividends thereon, and the roads and fixtures, depots, workshops, warehouses, and vehicles of transportation belonging to the said company shall be forever exempt from taxation in each and every of the said States of Tennessee and Kentucky, and it shall not be lawful for either of [639] the said States, or any corporate or municipal, police or other authority thereof, or of any town, city, county or district thereof, to impose any tax on such stock or dividends, property or estate." (Acts of Tenn. 1849-50, chap. 76, § 40.)

It does not appear that any organization of this company was ever perfected. It is stated by counsel that none ever took place; and it would seem that such was the conclusion of this court in *Goodlett* v. *Louisville & N. R. Co.* 122 U. S. 391, 406 [30: 1230, 1232].

Assuming, however, that its organization was perfected, its rights, powers and privileges were subject to the restrictions specified in the Act, and one of these was that the Act should "become a law whenever the State of Kentucky may enact the same for the same purpose, with such modifications and amendments" as she may deem right, not inconsistent with its provisions. By this restriction we understand that the Act was not to take effect until re-enacted by Kentucky, with such modifications as she might suggest, not inconsistent with it. It is conceded that Kentucky never passed any such Act as here mentioned. We are of opinion, therefore, that we may properly omit from consideration the Act of February 9, 1850, to incorporate the Nashville and Louisville Railroad Company, and the attempt to invest the Cincinnati, Cumberland Gap and Charleston Railroad Company with its "rights, powers and privileges." If this construction be correct, the Nashville and Louisville Railroad Company never acquired under that Act any rights, powers or privileges, those designated in its charter being subject to restrictions, which were not complied with; and, therefore, whatever right the Cincinnati, Cumberland Gap and Charleston Company possessed, to have its property exempted from taxation, must be found independently of the provision referring to and granting the exemption contained in the charter of the Nashville and Louisville Railroad Company. There is no such exemption from taxation in its own charter. It is, however, contended that provisions in an Act of the Legislature of the State, chartering the Lexington and Knoxville Railroad Company, passed on the 22d of December, 1853, had the effect of extending such exemption to the property of the Cincinnati, Cumberland Gap and Charleston Railroad Company, inasmuch as it invests that company with the "rights, powers and privileges" "of the East Tennessee and Virginia Railroad Company." (Acts of Tenn. 1853-4, chap. 325, § 6.) The Act incorporating this last company declared that its capital stock should be forever exempt from taxation, and that its road, "with all its fixtures and appurtenances, including workshops, warehouses, and vehicles of transportation," should be exempt from taxation for the period of twenty years from the completion of its road, and no longer, and that the road should be commenced within five years after the passage of the Act, and be finished within ten years thereafter, otherwise the charter should be void. (Acts of Tenn. 1847-8, chap. 120, § 30, 31.) [640]

The answer avers that the road has never been completed, and no proof was offered to refute this averment. The burden of proof to show the completion was upon the complainant, for until then the exemption claimed could have no existence even while the property remained in the possession of the Cincinnati, Cumberland Gap and Charleston Railroad Company.

Assuming, however, that we are mistaken in the construction given as to the effect of the provisions in the charters of the two companies, the Nashville and Louisville Railroad Company and the East Tennessee and Virginia Railroad Company, and that the references to those companies are to be construed as embodying all "the rights, powers and privileges" which it was intended the Nashville and Louisville Railroad Company should possess if the Act creating its charter had been re-enacted by Kentucky, and which it was intended the East Tennessee and Virginia Railroad Company should possess after the completion of its road, our conclusion upon the questions involved would not be affected. It is conceded that the property of the company passed upon sales and conveyances made under a decree rendered in a suit against the company commenced by the State of Tennessee, to parties who have since conveyed the same to the complainant. That suit was brought to enforce a statutory lien reserved by the State as security for the loan of [641] her bonds issued to the company, and the sale made under the decree and confirmed was of the "property and franchises" of the railroad company.

By this sale and the conveyance which fol-

lowed, immunity from taxation did not pass. Such immunity is not in itself transferable. It has been held, and the doctrine has been so often repeated that it is no longer an open question, that the Legislature of a State may exempt the property of particular persons or corporations from taxation, either for a limited period or perpetually; but to justify the conclusion that such exemption is granted, it must appear by language so clear and unmistakable as to leave no doubt of the purpose of the Legislature. The power of taxation is one of the highest attributes of sovereignty, and the suspension of its exercise as to any persons or property is not a matter to be presumed or inferred. It must be declared or it will not be deemed to exist. If the Legislature can lay aside a power devolved upon it for the good of the whole people of the State for the benefit of a private party, it must speak in such unmistakable terms that they will not admit of any reasonable construction consistent with the reservation of the power. *The Delaware Railroad Tax*, 85 U. S. 18 Wall. 206, 225 [21: 888, 894].

Yielding to the doctrine that immunity from taxation may be granted, that point being already adjudged, it must be considered as a personal privilege not extending beyond the immediate grantee, unless otherwise so declared in express terms. The same considerations which call for clear and unambiguous language to justify the conclusion that immunity from taxation has been granted in any instance, must require similar distinctness of expression before the immunity will be extended to others than the original grantee. It will not pass merely by a conveyance of the property and franchises of a railroad company, although such company may hold its property exempt from taxation. As we said in *Morgan* v. *Louisiana*, 93 U. S. 217, 223 [23: 860, 861]: "The franchises of a railroad corporation are rights or privileges which are essential to the operation of the corporation, and without which its road and works would be of little value, such as the [642] franchise to run cars, to take tolls, to appropriate earth and gravel for the bed of its road, or water for its engines, and the like. They are positive rights or privileges, without the possession of which the road of the company could not be successfully worked. Immunity from taxation is not one of them. The former may be conveyed to a purchaser of the road as part of the property of the company; the latter is personal, and incapable of transfer without express statutory direction."

It is true there are some cases where the term "privileges" has been held to include immunity from taxation, but that has generally been where other provisions of the Act have given such meaning to it. The later and, we think, the better opinion is that unless other provisions remove all doubt of the intention of the Legislature to include the immunity in the term "privileges," it will not be so construed. It can have its full force by confining it to other grants to the corporation.

The case of *Railroad Company* v. *Hamblen County*, 102 U. S. 273 [26: 152], was, with the exception of one particular, substantially like the one before us. The claim of exemption founded upon the Act of December 22, 1853, referring to the charter of the East Tennessee and Virginia Railroad Company, was not there relied upon. Reliance was, however, placed upon the Act chartering the Nashville and Louisville Railroad Company as exempting the property of the Cincinnati, Cumberland Gap and Charleston Railroad Company from taxation. The court held that immunity from taxation did not pass to the purchaser upon the sale of the property under the decree rendered in the suit brought by the State against the company.

The decree below must therefore be reversed and the cause remanded with directions to dismiss the bill, and it is so ordered.

JARED E. REDFIELD, *Plff. in Err.*, [623]
v.
WILLIAM P. PARKS ET AL.

(See S. C. Reporter's ed. 623-625.)

Insufficient record—certiorari *to bring up papers omitted from the record.*

1. No case will be heard in this court until a complete record is filed. The complaint and answers are necessary to such hearing, and, unless the record contains them, the case cannot be heard.
2. Where more than three years have elapsed since the transcript of the record was filed in this court, and defendants in error have not moved to dismiss the case for a failure to comply with the rules, and the case has been submitted to this court on both sides, on the merits, a writ of *certiorari* may issue on the application of the plaintiff in error to bring into this court the papers omitted from the transcript.

[No. 247.]

Argued April 12, 1889. Decided May 13, 1889.

IN ERROR to the Circuit Court of the United States for the Eastern District of Arkansas, to review a judgment dismissing a complaint in an ejectment suit.

Certiorari *ordered to bring up papers omitted from the transcript.*

The facts are stated in the opinion.

Mr. **S. F. Clark** for plaintiff in error.

Mr. **D. W. Jones** for defendants in error.

Mr. Justice **Blatchford** delivered the opinion of the court:

This is a writ of error to the Circuit Court of the United States for the Eastern District of Arkansas, in an ejectment suit brought in that [624] court by Jared E. Redfield against William P. Parks and other defendants, in which a judgment was rendered on the 28th of April, 1885, dismissing the complaint on the merits. The plaintiff has brought the writ of error.

The suit appears to have been commenced on April 11, 1882. It appears from the transcript of the record filed in this court that a complaint and several answers were filed, and sundry exceptions, and that the case was tried by the court on the written waiver of a jury, and that the court, having heard the evidence of both parties, found the issues for the defendants. There is a bill of exceptions, which finds certain facts specially and certain conclusions of law in favor of the defendants, and contains

NOTE.—See note to Clark v. Hackett, 66 U. S., 17 L. ed. 69, for precedents and authorities upon CERTIORARI *in United States Courts.*

exceptions by the plaintiff to those conclusions, and prayers to the court by the plaintiff to find certain conclusions of law, and a refusal by the court so to find, and exceptions by the plaintiff to such refusal.

We find it impossible, under our rules, to hear the case as it stands. The pleadings referred to in the transcript of the record are not set forth. Rule 8, subdivision 1, provides as follows: "1. The clerk of the court to which any writ of error may be directed shall make return of the same, by transmitting a true copy of the record and of the assignment of errors, and of all proceedings in the case, under his hand and the seal of the court." Rule 8, subdivision 3, provides as follows: "3. No case will be heard until a complete record containing in itself, and not by reference, all the papers, exhibits, depositions, and other proceedings, which are necessary to the hearing in this court, shall be filed."

The transcript of the record was filed in this court on April 5, 1886. The certificate of the clerk of the circuit court to the transcript is dated March 8, 1886, and does not comply with Rule 8, subdivision 1, for it only certifies "that the foregoing writing, annexed to this certificate, is a true, correct, and compared copy of the original remaining of record in my office." It does not say, as required by the rule, that the annexed papers are "a true copy of the record, and of the assignment of errors, and of [625] all proceedings in the case." It is quite apparent that there are papers of record in the court below, a copy of which ought to form part of the transcript. The complaint and answers are necessary to the hearing in this court, and unless a record containing them is filed here the case cannot be heard.

As was said in *Union Pac. R. Co.* v. *Stewart*, 95 U. S. 279, 284 [24:431, 432], it is the duty of the party who takes a writ of error "to see to it that the record is properly presented here."

In *Keene* v. *Whittaker*, 38 U. S. 13 Pet. 459 [10:246], the circuit court had given a judgment for the defendants, on an agreed case, and the record sent here, on a writ of error, contained only the agreed statement of facts and the judgment of the circuit court, with the petition for the writ of error and its allowance. At that time the 11th rule of the court was like the present Rule 8, subdivision 1, and the 31st rule was like the present Rule 8, subdivision 3. In view of those rules, and because the record did not contain any of the proceedings in the court below, this court dismissed the case.

The same thing was done in *Curtis* v. *Petitpain*, 59 U. S. 18 How. 109 [15:280], where the certified record consisted of an agreed statement of facts and a judgment.

While the court has undoubtedly the power to dismiss the case as for want of prosecution by the plaintiff in error, because of his failure to see that a proper return was filed, yet, as the transcript was filed here on the 5th of April, 1886, and more than three years have elapsed without the making of a motion by the defendants in error to dismiss the case because of a failure to comply with the rules, and the case has been submitted to us on printed briefs filed on both sides, on the merits, we think that the plaintiff in error ought to have leave to sue out a writ of *certiorari*, to bring into this court the papers omitted from the transcript. For this purpose a *certiorari* may, on his application to the clerk, issue, returnable at the next term.

FRANK B. ANDRUS, *Plff. in Err.*, [643]
v.
THE ST. LOUIS SMELTING AND REFINING COMPANY.

(See S. C. Reporter's ed. 643-649.)

Obvious defect—covenant for quiet possession—when broken—tortious possession—false representations on sale of land—representations as to title—when merged in covenants.

1. The law does not afford relief to one who suffers by not using the ordinary means of information, whether his neglect be attributable to indifference or credulity.
2. The covenant for quiet possession, in a deed, merges all previous representations as to the possession, and limits the liability growing out of them.
3. If the occupant holds by a paramount title, and thus lawfully excludes the purchaser from possession, such covenant is broken.
4. If the occupation is without right, the remedy of the purchaser in such case is to dispossess the intruder. His occupation does not constitute a breach of the covenant.
5. An action may be maintained for false representations, upon the sale of real property, relating to matters collateral to the title and right of possession, such as the location, quantity, quality and condition of the land, the privileges connected with it, or the rents and profits derived therefrom.
6. Representations by the vendor as to his having title to the premises sold may also be the ground of action, where he is not in possession and has neither color nor claim of title, under any instrument purporting to convey the premises, or any judgment establishing his right to them.
7. But where the vendor, holding in good faith, under an instrument purporting to transfer the premises to him, or under a judicial determination of a claim to them in his favor, executes a conveyance to the purchaser, with a warranty of title and a covenant for peaceable possession, his previous representations as to the validity of his title or his right of possession, are mere expressions of confidence in his title, and are merged in the warranty and covenant, which determine the extent of his liability.

[No. 260.]

Submitted April 17, 1889. Decided May 13, 1889.

IN ERROR to the Circuit Court of the United States for the District of Colorado, to review a judgment dismissing, on demurrer to the complaint, an action for fraud and deceit. *Affirmed.*

Statement by *Mr. Justice* **Field:**

On the 27th of March, 1879, the plaintiff below, a citizen of Colorado, purchased for the consideration of $875 a lot or parcel of land in the Town of Leadville, Colorado, described in the complaint, and took a conveyance of it from the defendant, the St. Louis Smelting and Refining Company, a corporation created under the laws of Missouri. The deed of conveyance contained covenants that the plaintiff was seised of an estate in fee simple of the premises; that they were clear of all liens and incumbrances; and that it would warrant and defend the grantee in their peaceable possession against all persons lawfully claiming the same or any part thereof.

NOTE.—For note on *Covenant of Seisin, when broken, etc.*, see 49 U. S. 12 L. ed. 1153.

The complaint alleges, with much repetition and unnecessary verbiage, that prior to the purchase of the land, and pending negotiations for it, the officers, agents, and attorneys of the defendant represented to him that the company had secured the actual possession of the premises and obtained a release from all other parties claiming or pretending to claim the right of possession; that it would execute to him a good and sufficient warranty deed containing all the usual covenants, including one for quiet and peaceable possession; and assured him that if he would purchase and pay for the premises it could and would deliver to him immediate possession; that at that time there was a great rush of people to the Town of Leadville on account [644] of the report of rich mineral discoveries in its immediate neighborhood; that there was a great struggle to secure possession of lots and business houses in the town; that there were many conflicting titles and claims to their possession; that amidst the general confusion and struggle and conflicting claims, the plaintiff was unable, after making due inquiry, and using all the diligence in his power, to find out whether the statements of the officers, agents, and attorneys of the defendant were true or false; that, therefore, relying upon their truth, and believing that they were made in good faith, he paid the $875 and took the deed of conveyance; that before and at the time he purchased, the defendant represented that it had received a patent from the Government of the United States for the premises as well as for a large number of other lots in the town, that no opposition would be made to its right of possession, and that no trouble would, therefore, occur, either in regard to the title or the possession of the premises; that these statements and assurances as to the defendant being able to put the plaintiff into immediate possession, and to having obtained a release from all parties who claimed an adverse title and right to the possession of the premises, and that it would put him into immediate possession, were false and fraudulent, and were made by the agents, officers, and attorneys of the defendant to deceive and defraud the plaintiff out of the money paid, knowing at the time that the defendant could not put him in possession of the premises; that when he attempted to enter upon them after his purchase he found that one Sarah Ray was in actual possession, claiming the same by virtue of prior possession and occupation on the public domain of the United States, under a town-site right, and refused to surrender them to him; that soon afterwards the company commenced an action of ejectment against her to recover the possession of the premises, but did not succeed in ejecting her and her tenants before the 22d of February, 1883, until which time the plaintiff was kept out of possession; and that during this period the rent of the premises was worth $400 a month, amounting, during the period mentioned, to $18,733, all of which the plaintiff alleges he lost by the fraud and deceit practiced [645] upon him by the defendant besides the interest thereon. He therefore prays judgment thereon for $20,000 and costs.

To this complaint the defendant demurred on the following grounds:

1. That the complaint did not set forth facts sufficient to constitute a cause of action.

2. That several pretended causes of action had been improperly united therein, to wit:

(*a*) A pretended cause of action for breach of a parol contract to put the plaintiff in possession of the land described;

(*b*) For breach of the covenant of quiet enjoyment contained in the plaintiff's deed;

(*c*) For deceit; and that these several causes of action had been improperly blended in one statement.

3. That the complaint was ambiguous, unintelligible, and uncertain, in this, that it did not appear how the plaintiff was misled or deceived by the pretended representations stated in the complaint.

The record also discloses what is called a "substituted demurrer," specifying various particulars in which the complaint was alleged to be unintelligible and uncertain, but as counsel of both parties give the demurrer above as the one on which the court below passed, it was so considered here. The court below sustained the demurrer, holding "that the complaint and the matters and things therein alleged were not sufficient in law for the said defendant to answer unto." The plaintiff thereupon stating that he would abide by his complaint, it was adjudged that the cause be dismissed with costs. To review this judgment the case is brought to this court.

Mr. **T. A. Green,** for plaintiff in error:

Fraud and deceit, when accompanied with damage, is a good cause of action.

Hilliard, Torts, 137; *Upton* v. *Vail*, 6 Johns. 181, 182; *Barney* v. *Dewey*, 13 Johns. 225; *Morgan* v. *Bliss*, 2 Mass. 111; *Farrar* v. *Alston*, 1 Dev. L. 69; *Ide* v. *Gray*, 11 Vt. 615; *Jones* v. *Emery*, 40 N. H. 348.

The above doctrine applies to sales of real estate.

Rawle, Cov. 64, 65; *Monell* v. *Colden*, 13 Johns. 396; *Clark* v. *Baird*, 9 N.Y. 183; *Phillips* v. *Bush*, 15 Iowa, 64; *Johnson* v. *McDaniel*, 15 Ark. 109; *Fowler* v. *Abrams*, 3 E. D. Smith, 1; *Cravins* v. *Gant*, 4 T. B. Mon. 126.

An action of deceit will lie, notwithstanding an express warranty.

Cravins v. *Gant*, 4 T. B. Mon. 126.

A vendor of real estate is liable for false and fraudulent representations in regard to quantity.

Clark v. *Baird*, 9 N.Y. 183; *Harlow* v. *Green*, 34 Vt. 379; *Monell* v. *Colden*, 13 Johns. 395; *Wardell* v. *Fosdick*, 13 Johns. 325; 1 Hilliard, Torts, 5, § 4.

A purchaser must exercise due diligence when the means of information are within his reach.

1 Hilliard, Torts, 16, §§ 11, 12.

A false representation, although made through ignorance, in regard to real property, avoids a sale.

1 Hilliard, Torts, 14.

A purchaser may retain the property and recover the damages growing out of the fraud and deceit.

1 Chitty, Cont. 649; *Osborne* v. *Tuller*, 14 Conn. 529; *Vincent* v. *Leland*, 100 Mass. 432; *Douglass Axe Manufacturing Co.* v. *Gardner*, 10 Cush. 88; *Beebee* v. *Robert*. 12 Wend. 413;

Waring v. *Mason*, 18 Wend. 425; *Muller* v. *Eno*, 14 N. Y. 602; *Milton* v. *Rowland*, 11 Ala. 732; *Taymon* v. *Mitchell*, 1 Md. Ch. 496; *Kornegay* v. *White*, 10 Ala. 255; *Borrekins* v. *Bevan*, 3 Rawle, 23; *Cutter* v. *Powell*, 2 Smith, Lead. Cas. 25-26.

A representation of the value of land is a mere expression of opinion, for which an action for fraud cannot be maintained.

Dupont v. *Payton*, 2 E. D. Smith. 424.

Mr. **Chas. E. Gast**, for defendant in error: Plaintiff received a perfect fee-simple title. Sarah Ray was a bare trespasser, a "squatter," without any right whatever; the lawful title was asserted against her, and in due course, upon legal proceedings, she was ejected. These facts negative the idea that there was any breach of the covenant.

Rawle, Cov. Title, 163, 165; Boone, Real Prop. § 314; 2 Washb. Real. Prop. 715; *Gardner* v. *Keteltas*, 3 Hill, 330.

There is no warranty express or implied against the acts of strangers.

Nokes' Case, 4 Coke, 80 (b); *Dudley* v. *Folliott*, 3 T. R. 584; *Hayes* v. *Bickerstaff*, Vaugh. 118; Platt, Cov. 314 and cases there cited; *Ludwell* v. *Newman*, 6 T. R. 458.

Possession of a stranger, although he claim title and right of possession, does not amount to a breach of the covenant for quiet enjoyment.

Spear v. *Allison*, 20 Pa. 200; *Peabody* v. *Phelps*, 9 Cal. 213.

[646] *Mr. Justice* **Field** delivered the opinion of the court:

As appears by the above statement, the gist of the action is the alleged deceit practiced upon the plaintiff by the agents, attorney, and officers of the company to induce him to purchase from it a lot in Leadville, by representing that it had obtained a release of the right of all claimants to the land, and could put him into immediate possession; whereas, upon attempting to enter upon the land purchased, he found another in possession, who refused to surrender it, and thus he was kept out of possession from the time of his purchase, March 27, 1879, to February 22, 1883, during which period he lost its rental value.

To this ground of complaint there are two obvious answers. In the first place, the plaintiff could have required the delivery of the possession of the land to accompany the payment of the money. The lot being in the town might have been readily reached, when the ability of the company to give possession could have been at once determined. The plaintiff alleges that he used all diligence in his power to find out whether the representations of the officers, agents, and attorneys of the company were true or false, but the inspection of the premises, the most natural and obvious mode of ascertaining [647] whether they were occupied by another, does not seem to have been resorted to. The law does not afford relief to one who suffers by not using the ordinary means of information, whether his neglect be attributable to indifference or credulity; nor will industrious activity in other directions, to the neglect of such means, be of any avail.

Besides, it does not appear at what time the party in possession entered upon the land. The complaint only alleges that when—the time not being stated—the plaintiff attempted to take possession, he found another person there, who, for aught that appears, may have gone on the land after the execution and delivery of the deed. There was at the time, according to the allegations of the complaint, a great struggle to obtain possession of lots among the crowd of persons pressing to the town owing to the report of rich gold discoveries within its immediate neighborhood. The claim of right to the land advanced by the occupant was founded only upon her alleged prior possession of it as a part of the public domain of the United States, a claim which would seem, from the result of the ejectment suit against her brought by the company, to have been entirely worthless. The complaint alleges that the defendant represented that it had received a patent from the Government of the United States for the premises, as well as for a large number of other lots in the town, and contains no averment that this representation was untrue. It may therefore be fairly presumed, that upon the title thus conferred, the company subsequently evicted the intruder. The possession of a patent of the United States would have justified all the representations alleged, as to title and right of possession, and the purchaser might have called for an inspection of that document if doubtful of the statements of the agents and officers of the vendor.

In the second place, the covenant in the deed for quiet possession merged all previous representations as to the possession, and limited the liability growing out of them. Those representations were to a great extent, if not entirely, mere expressions of confidence in the company's title, and the right of possession which followed it, against all intruders. The covenant [648] was an affirmance of those statements in a form admitting of no misunderstanding. It was the ultimate assurance given, upon which the plaintiff could rely, a guaranty against disturbance by a superior title. That covenant has not been broken. It is a covenant against disturbance by "persons lawfully claiming" the premises or any part thereof. If the occupant holds by a paramount title, and thus lawfully excludes the purchaser from possession, the covenant is broken. But it is not broken by a tortious disturbance. If the occupation is without right, the remedy of the purchaser is to dispossess the intruder. His occupation does not constitute a breach of the covenant. *Beebe* v. *Swartwout*, 3 Gilman, 162, 179; *Kelly* v. *Dutch Church of Schenectady*, 2 Hill (N. Y.) 105, 111.

False and fraudulent representations upon the sale of real property may undoubtedly be ground for an action for damages, when the representations relate to some matter collateral to the title of the property, and the right of possession which follows its acquisition, such as the location, quantity, quality, and condition of the land, the privileges connected with it, or the rents and profits derived therefrom. *Lysney* v. *Selby*, 2 Ld. Raym. 1118; *Dobell* v. *Stevens*, 3 Barn. & C. 623; *Monell* v. *Colden*, 13 Johns. 396; *Sandford* v. *Handy*, 23 Wend. 260; *Van Epps* v. *Harrison*, 5 Hill, 63. Such representations by the vendor as to his having title to the premises sold may also be the ground of action where he is not in posses-

sion, and has neither color nor claim of title under any instrument purporting to convey the premises, or any judgment establishing his right to them. Thus in *Wardell* v. *Fosdick*, 13 Johns. 325, an action for deceit was sustained against the vendor of land which had no actual existence, the court holding that in such case the purchaser might treat the deed as a nullity. The land not being in existence there could be no possession, and of course no eviction, and consequently no remedy upon the covenants; and the purchaser would be remediless if he could not maintain the action. But where the vendor, holding in good faith under an instrument purporting to transfer the premises to him, or under a judicial determination of a [649] claim to them in his favor, executes a conveyance to the purchaser, with a warranty of title and a covenant for peaceable possession, his previous representations as to the validity of his title, or the right of possession which it gives, are regarded, however highly colored, as mere expressions of confidence in his title, and are merged in the warranty and covenant, which determined the extent of his liability.

Judgment affirmed.

---

[626] GEORGE M. PETERS, *Appt.*,

v.

THE ACTIVE MANUFACTURING COMPANY.

(See S. C. Reporter's ed. 626-629.)

Patent void for want of novelty—dies for dash frames.

1. The patent granted to George M. Peters July 17, 1883, for an improvement in dies for making dash frames, is void for want of invention.
2. Dies which act upon two pieces of metal which are capable of being welded to each other, and which are brought to a welding heat, necessarily will weld them together by the impact and action of the dies. There is no patentable invention in securing the result of welding or swaging by the action of dies, if there be no patentable invention in the construction and use of the dies to produce a given shape in the article acted upon by them.

[No. 254.]

Submitted April 16, 1889. Decided May 13, 1889.

APPEAL from a decree of the Circuit Court of the United States for the Southern District of Ohio, that the patent, No. 281,553, granted to George M. Peters for an improvement in dies for making dash frames, is void, and dismissing the action for its infringement. *Affirmed.*

The facts are stated in the opinion.

Mr. **Wm. Hubbell Fisher** for appellant.

Mr. **Arthur Stem** for appellee.

Mr. Justice **Blatchford** delivered the opinion of the court:

This is a suit in equity, brought in the Circuit Court of the United States for the Southern District of Ohio, by George M. Peters against The Active Manufacturing Company, a corporation, founded on the alleged infringement of letters patent No. 281,553, granted to said Peters, July 17, 1883, on an application filed December 7, 1880, for an "improvement in dies for making dash frames." A dash frame is made of metal, and is to be used in constructing a dash board for a carriage or other vehicle.

The defenses set up in the answer are want of novelty, noninfringement, and also that the devices described and claimed in the patent were, before the alleged invention thereof by Peters, old and well known in forging, welding, and other metal working, and that it required no invention to apply or adapt such devices to the old form and construction of dash frames. Issue was joined, proofs were taken, and the circuit court, in its decree, found that the patent was "void for want of invention," and dis- [627] missed the bill. We concur in that conclusion.

The specification of the patent says: "The principal object of my invention is to provide an efficient and useful method of welding the end bars of a metal dash frame to the bottom rail, and a method by which the bottom rail of the dash is strengthened at the weld and at the portion of said rail to which the dash foot is to be attached. Another object of my invention is to provide a means by which a recess is formed in the bottom rail, preparatory to punching said rail, to receive the bolt or other attachment which secures the dash foot to the bottom rail, the operation of forming the recess being performed at the same time that the end bar is welded to the bottom rail."*

The entire operation set forth in the specification, of welding the bars to the rail, of strengthening the bottom rail of the dash, and of forming a recess in the bottom rail at the same time that the welding is done, is described in the specification as effected by one and the same simultaneous action of two opposing dies, an upper die and a lower die, placed face to face. The dies are provided with channels or depressions, one, *a*, to receive the end bar of the frame, and the other, *a'*, to receive the bottom rail, the channels, *a a'*, of one die coinciding with like channels in the other die, when the two dies are placed together. From the bottom of the depressions *a'* in the two dies rise tongues, a^2, which, like the depressions *a*, coincide with each other when the two dies are placed together, the tongues preferably not rising quite to the face of the dies, so that, when the dies are placed together, a slight space is left between the two tongues. The specification also states that, preferably, the tongues a^2 are so formed that when the dies are placed together the tongues will approach closer to each other at that portion of themselves which forms that part of the web in the lower bar which is to be punched through to receive the bolt or other device by which the dash frame is connected to the foot or vehicle, than at any other point; in other words, the face of the tongues is inclined. The object of such a formation of the tongues is stated in the specifica- [628] tion to be, to make the web left in the bottom rail thinner in that portion of such rail where perforations are to be made to receive the bolts which secure the dash-foot to the frame, the web being in other portions preferably left of

NOTE.—As to *What constitutes a patentable invention* see Thompson v. Boisselier, 114 U. S. 29 L. ed. 76 and note.

*See cuts *ante*, 743-4; also case between the same parties, *ante*, 738.

a uniform thickness; and one of the objects of thus making the web thin is to enable it to be more readily punched or otherwise perforated. By means of these dies a recess is formed in either side of the bottom rail, which recess corresponds with the tongues a^2 of the dies.

The four claims of the patent are as follows: "1. The combination, substantially as set forth, of the two dies having opposing angularly-joined depressions, a a', and a tongue, a^2, in the depression a' of either or both dies. 2. The combination, substantially as set forth, of the two dies having opposing angularly-joined depressions, a a', and a tongue, a^2, in the depression a^2 of either or both dies, the depressions a' deepening toward their junctions with the depressions a. 3. The combination, substantially as before set forth, of the dies having opposing angularly-joined depressions, a a' and a tongue, a^2, in either or both of the said depressions, the face of said tongue or tongues being inclined. 4. The combination, substantially as before set forth, of the dies having opposing angularly-joined depressions, a a', and a tongue, a^2, in either or both of the said depressions, the depressions a' deepening toward their junctions with the depressions a, and the face of the tongue or tongues being inclined."

The whole of this alleged invention is based upon the idea, old and well known, that a metallic die, whether of a cameo or intaglio form, will, when impressed upon a piece of heated or yielding metal, leave the latter of the converse form of the die, and that, when two dies are brought together over a piece of heated or yielding metal, the latter will take the shape of the space existing between the contours of the two dies. It is an inevitable consequence of the use of two dies in such a way, on two pieces of metal of proper size, heated to a welding heat, that swaging or welding will take place by the impact of the dies; that, when the dies have tongues and depressions in them, the metal acted on by such tongues and depressions will take the shape, in form and thickness, of the space left between the tongues or the depressions; and that a greater or less thickness of metal will be the result as the face of the tongues is more or less inclined. All this was old and common knowledge; and the whole of the operation resulting from such features is nothing but the well known action of two dies so shaped as to give the desired conformation to the article acted upon by them.

[629]

If it was desired to preserve a channel in the bottom rail of the dash frame, when the bottom rail was made of channeled iron, it was obvious, and not a matter of invention, that the die must be provided with a tongue to fit into the channel, to prevent the filling up of the channel by the forcing into it of metal by the action of the dies in welding the two pieces together. So, too, if it was desirable to make the welded parts thicker, and thus stronger, at the angle formed by the end bar and the bottom rail, it was obvious that the bottoms of the recesses in the dies must be deepened at such angle. That is all there is of the alleged invention of Peters.

It appears from the testimony that it was not new, at the time of such alleged invention, to use channeled iron in making dash frames; or new to weld channeled iron to flat or oval bars of iron; or new to use dies for swaging or welding together two pieces of iron. All that remained to be done in the present case, as in other cases, was to adapt the form of the dies to the shape desired in the article to be acted upon by them. Dies which act upon two pieces of metal which are capable of being welded to each other, and which are brought to a welding heat, necessarily will weld them together by the impact and action of the dies. There is no patentable invention in securing such result of welding or swaging, if there be no patentable invention in the construction and use of the dies to produce a given shape in the article acted upon by them.

The decree of the Circuit Court is affirmed.

---

[649]

J. C. DUNLAP, *Plff. in Err.*,

v.

THE NORTHEASTERN RAILROAD COMPANY.

(See S. C. Reporter's ed. 649-653.)

Contributory negligence—exception, when timely.

1. The question of contributory negligence should be submitted to the jury where the conclusion does not follow, as matter of law, that no recovery can be had upon any view which can be properly taken of the facts which the evidence tends to establish.

2. Where the bill of exceptions states that the court instructed the jury to return a verdict for defendant and that the jury returned such verdict and that the plaintiff excepted to said instructions and verdict during the term at which the case was tried and while said term was still in session and there was no opportunity for plaintiff's counsel to except until the instructions were given, *held*, that the general instruction of the court to find for defendant was excepted to at the proper time.

[No. 256.]

Argued April 17, 1889. Decided May 13, 1889.

IN ERROR to the Circuit Court of the United States for the Northern District of Georgia, to review a judgment for defendant in an action brought to recover for injuries received by plaintiff by reason of defendant's train leaving the track, while plaintiff was acting as engineer. *Reversed.*

Statement by *Mr. Chief Justice* **Fuller:**

This is an action on the case brought by Dunlap against the Northeastern Railroad Company to recover for injuries received during the month of August, 1882, by reason of a train belonging to defendant leaving the track, while Dunlap was acting as engineer.

The Code of Georgia (1882, pp. 509, 762) provides as follows:

"§ 2083. *Liability of railroad companies as carriers.*—Railroad companies are common carriers, and liable as such. As such companies necessarily have many employees who cannot possibly control those who should exercise care and diligence in the running of trains, such companies shall be liable to such employees as to passengers for injuries received from the want of such care and diligence."

"§ 3036. *Injury by co-employee.*—If the per-

NOTE.—*Exception, when must be taken, to be available on review.* See note to Phelps v. Mayer, 15 How. 160, 14 L. ed. 643.

[650] son injured is himself an employee of the company, and the damage was caused by another employee, and without fault or negligence on the part of the person injured, his employment by the company shall be no bar to recovery."

It was contended on behalf of the plaintiff that the accident happened in consequence of the roadbed being defective to such an extent and under such circumstances as to render defendant liable; while defendant claimed that plaintiff was guilty of contributory negligence, because he was running faster than twenty miles an hour, the superintendent having instructed him not to exceed that speed; because he made use of intoxicating drinks while on duty; and because the rules of the company limited speed to ten miles an hour before crossing trestles and bridges, while the place of the accident was near a trestle and plaintiff was running at a greater rate than ten miles an hour.

Evidence was adduced tending to sustain plaintiff's contention, and to refute that of defendant, as to a rate of speed exceeding twenty miles an hour, and the use of intoxicating liquors; and also to show that plaintiff was a locomotive engineer in the employment of the Richmond and Danville Railroad, and during the month of August, 1882, was sent to relieve an engineer on the Northeastern Railroad; that he relieved him on Saturday, on which day he hauled dirt, and that on Saturday evening he went to Tallulah Falls and got his train conductor, and from there to Athens, Sunday, and started out on Monday, on the evening of which day the accident occurred; that he had never been over the road before and had no experience of it or knowledge of the track; that he had never seen or read the train rules governing the running of trains on the road; that while he had been over the road once and returned, it was impossible for him, upon so slight an experience, to remember at night just where the trestles were; and that he did not know at the time that this particular trestle was immediately in front of him. Defendant's superintendent testified that he understood that Dunlap had never been over the road but once; that he explained to him Monday morning that [651] he had a safe conductor and good set of brakemen, and that he could rely upon the conductor; that he "talked with him about the train and the track, and the conductor, and the equipment of the train, and about the pilot and the pilot's duty, and about the character of the conductor and the character of the run generally, and the rate of speed, which was from eighteen to twenty miles an hour—not to exceed twenty;" and that he did not know "that Mr. Dunlap ever saw our train rules or read them." There was some controversy as to the existence of the rule as stated, at the time of the accident, but there was no dispute that the train was running more than ten miles an hour.

The court instructed the jury to return a verdict for the defendant, which being done and judgment rendered thereon, the cause was brought here on writ of error.

Mr. **Hoke Smith,** for plaintiff in error:

To constitute contributory negligence there must be a want of ordinary care on the part of the plaintiff and a proximate connection between that and the injury.

Beach, Contributory Negligence, § 3; *Pa. Co.* v. *Roney*, 12 Am. & Eng. R. R. Cas. 223; *Jones* v. *East Tenn., V. & G. R. Co.* 128 U. S. 444 (*ante*, 479); *Kane* v. *Northern Cent. R. Co.* 128 U. S. 93 (*ante*, 340).

Mr. **Pope Barrow,** for defendant in error:

No exceptions were taken during the trial.

Walton v. *U. S.* 22 U. S. 9 Wheat. 651 (6: 182); *Ex parte Bradstreet*, 29 U. S. 4 Pet. 102 (7: 796); *Phelps* v. *Mayer*, 56 U. S. 15 How. 160 (14: 643); *Sheppard* v. *Wilson*, 47 U. S. 6 How. 275 (12: 430); *Phœnix Ins. Co.* v. *Lanier*, 95 U. S. 171 (24: 383); *Barton* v. *Forsyth*, 61 U. S. 20 How. 532 (15: 1012); *French* v. *Edwards*, 80 U. S. 13 Wall. 506 (20: 702).

Upon the merits of this case the plaintiff is not entitled to recover.

Rowland v. *Cannon*, 35 Ga. 105; *Central R. & Bkg. Co.* v. *Kenney*, 58 Ga. 485; *Atlanta & W. Pt. R. Co.* v. *Webb*, 61 Ga. 586; Code, Ga. § 3036; *Central R. Co.* v. *Sears*, 61 Ga. 279; *Zettler* v. *Atlanta*, 66 Ga. 195; *Schofield* v. *Chicago M. & St. P. R. Co.* 114 U. S. 615 (29: 224); *Randall* v. *Balt. & O. R. Co.* 109 U. S. 478 (27: 1003); *Chandler* v. *Von Roeder*, 65 U. S. 24 How. 224 (16: 633); *Herbert* v. *Butler*, 97 U. S. 319 (24: 958); *Balt. & P. R. Co.* v. *Jones*, 95 U. S. 439 (24: 506); *Pleasants* v. *Fant*, 89 U. S. 22 Wall. 116 (22: 780).

Mr. Chief Justice **Fuller** delivered the opinion of the court:

The circuit court erred in not submitting the [652] question of contributory negligence to the jury, as the conclusion did not follow, as matter of law, that no recovery could be had upon any view which could be properly taken of the facts the evidence tended to establish. *Kane* v. *Northern Central R. Co.* 128 U. S. 91 [*ante*, 339]; *Jones* v. *East Tennessee, V. & G. R. Co.* 128 U. S. 443 [*ante*, 478].

It is urged that the exceptions were not properly saved, and therefore that they should be disregarded. There is some obscurity in the record upon this subject, but upon the whole we think that enough appears to enable us to pass upon the question presented. The bill of exceptions shows that certain instructions, numbered 1 and 2, were requested by plaintiff and refused, and certain instructions, numbered 3 and 4, objectionable or adverse to plaintiff, were given; and it is stated by the court that "The plaintiff's counsel presented his requests in writing before the charge of the court began. The court instructed the jury to find for the defendant, without notice to plaintiff's counsel that the requests would not [653] be given, and there was no opportunity for counsel to except to the failure of the court to charge as requested until the instructions were given to the jury. The exceptions therefore, contained in Nos. 1, 2, 3, and 4 were not taken or noted during the trial." But the bill of exceptions also states: "V. The court instructed the jury to return a verdict for the defendant. VI. The jury returned a verdict in accordance with said instructions, and judgment was thereupon entered up in behalf of defendant in pursuance of said instructions; and to said instructions, verdict, and judgment the plaintiff, by his counsel, excepted and now excepts, during the

term at which said case was tried and while said term is still in session, and assigns the same as error, and prays the court to sign and certify this exception."

We understand from this language, taken together, that the general instruction of the court to find for the defendant was excepted to at the proper time; and while greater accuracy of expression should have been used, we are not inclined by too technical a construction to preclude ourselves from correcting the error we hold was committed.

The judgment is reversed and the cause remanded, with directions to grant a new trial. Reversed.

---

[653]

UNITED STATES, *Plff. in Err.*,

v.

JOHN L. HAYNES ET AL.

(See S. C. Reporter's ed. 653-654.)

Jurisdiction as to amount—suit on official bond—Rev. Stat. § 699.

1. Where the amount in dispute is less than $5,000, and the case does not come within any of the classes specified in section 699 of the Revised Statutes, in which this court has appellate jurisdiction without regard to the sum or value in dispute, the case must be dismissed.
2. A suit upon an official bond is not an action for the enforcement of a revenue law of the United States.
3. The third subdivision of section 699 applies only to suits, whether sounding in tort or in contract, brought by individuals or corporations against officers of the revenue acting on behalf of the United States, and does not include any suit brought by the United States against one of those officers.

[No. 273.]

Submitted April 24, 1889. Decided May 13, 1889.

IN ERROR to the Circuit Court of the United States for the Western District of Texas, to review a judgment for the defendants in an action brought by the United States against the principal and sureties on the official bond of a collector of customs to recover moneys in his hands. *Dismissed.*

The facts are stated in the opinion.

Mr. **G. A. Jenks,** *Solicitor-Gen.*, for plaintiff in error.

Mr. **Charles W. Ogden** for defendants in error.

Mr. Justice **Gray** delivered the opinion of the court:

This was an action brought by the United States against the principal and sureties on the official bond of a collector of customs, to recover the sum of $634.60, which he had refused [654] to pay over, and claimed the right to retain as part of the emoluments of his office. The circuit court gave judgment for the defendants, and the United States sued out this writ of error, which the defendants in error now move to dismiss for want of jurisdiction.

The motion to dismiss must be granted. The amount in dispute is less than $5,000; and the case does not come within any of the classes specified in § 699 of the Revised Statutes, in which this court has appellate jurisdiction without regard to the sum or value in dispute. The only subdivisions which could possibly be supposed to cover this case are the second and third.

The second subdivision relates to judgments "in any civil action brought by the United States for the enforcement of any revenue law thereof;" and, as was directly adjudged in the recent case of *United States* v. *Hill*, 123 U. S. 681 [31: 275], a suit upon an official bond is not an action for the enforcement of a revenue law of the United States.

The third subdivision relates to judgments "in any civil action against any officer of the revenue, for any act done by him in the performance of his official duty, or for the recovery of any money exacted by or paid to him which shall have been paid into the Treasury." This applies only to suits, whether sounding in tort or in contract, brought by individuals or corporations against officers of the revenue acting on behalf of the United States, and does not include any suit brought by the United States against one of those officers. It has regard to actions in which the interest of the United States is as defendants, not as plaintiffs.

Writ of error dismissed for want of jurisdiction.

THE BOARD OF COUNTY COMMISSIONERS OF THE COUNTY OF LAKE, *Plff. in Err.*, [662]

v.

FRANK W. ROLLINS

(See S. C. Reporter's ed. 662-674.)

Constitution—interpretation of—construction of statute—constitutional prohibition against county incurring debts—Colorado Constitution—liability of county on county warrants.

1. When the text of a constitutional provision is not ambiguous, the courts, in giving construction thereto, are not at liberty to search for its meaning beyond the instrument.
2. If the words convey a definite meaning which involves no absurdity, nor any contradiction of other parts of the instrument, then that meaning, apparent on the face of the instrument, must be accepted.
3. Where a law is expressed in plain and unambiguous terms, whether those terms are general or limited, the Legislature should be intended to mean what they have plainly expressed. There is even stronger reason for adhering to this rule in the case of a Constitution than in that of a statute.
4. The Legislature cannot impose upon a county a compulsion to incur debt; nor can a county voluntarily assume it, as against the disability of a constitutional prohibition.
5. Section 6 of article 11 of the Constitution of Colorado is a limitation upon the power of the county to contract any and all indebtedness, including the county warrants for county expenses sued upon in this action.
6. A county in Colorado cannot be made liable for a debt contracted above the amount fixed by said constitutional provisions, although the debt is for ordinary county expenses, evidenced by county warrants.

[No. 1347.]

Submitted Jan. 2, 1889. Decided May 13, 1889.

IN ERROR to the Circuit Court of the United States for the District of Colorado, to re-

---

NOTE.—On *Construction of Statute according to purpose for which it was passed*, see U. S. v. Saunders, 89 U. S. 22 L. ed. 736 and *note*.

view a judgment in favor of plaintiff against the County of Lake, on county warrants issued for county expenses. *Reversed.*

The facts are stated in the opinion.

Messrs. **Daniel E. Parks** and *H. B. Johnson*, for plaintiff in error:

The adoption of a constitutional limitation like the one under consideration prohibits the incurring of indebtedness under propositions that have already been voted upon by the people.

Aspinwall v. *Daviess Co.* 63 U. S. 22 How. 364 (16: 296); *Falconer* v. *Buffalo & J. R. Co.* 69 N. Y. 491; *State* v. *Funding Board*, 28 La. Ann. 249.

The words of the Constitution "for all purposes" exclude all consideration of the nature of the indebtedness or the reason of its contraction.

Springfield v. *Edwards*, 84 Ill. 626; *Litchfield* v. *Ballou*, 114 U. S. 190 (29: 132).

It is not permitted to interpret what has no need of interpretation.

Jackson v. *Lewis*, 17 Johns. 477; *Waterford & W. Turnp. Co.* v. *People*. 9 Barb. 170; *People* v. *New York Cent. R. Co.* 13 N. Y. 80.

Though used in their plain and ordinary sense, general words may be limited by the relative word "such" to a particular description of thing contained in a preceding section.

Rex v. *Gwenop*, 3 T. R. 135; *Morris* v. *Mellin*, 6 Barn. & C. 446; *Bennett* v. *Daniel*, 10 Barn. & C. 500; *Powlter's Case*, 11 Coke, 33a; *Rex* v. *Marks*, 3 East, 157; *Wood* v. *Mytton*, 10 Q. B. 806; *Eastern Counties & L. & B. R. Co.* v. *Marriage*, 9 H. L. Cas. 32; *Reg.* v. *Rose*, 6 Q. B. 153; *Reg.* v. *Randall*, 4 El. & Bl. 564; *Rex* v. *Bawbergh*, 2 Barn. & C. 222; *Doe* v. *Hodgson*, 12 Ad. & El. 135; *Skuse* v. *Davis*, 10 Ad. & El. 685; *King* v. *Burrell*, 12 Ad. & El. 460; *Reg.* v. *Lee*, L. R. 1 Q. B. Div. 198; *Temp* v. *Holland*, 10 Mo. 255; *Sullivan* v. *State*, 36 Ark. 64; *Valentine* v. *Borden*, 100 Mass. 273; *Summerman* v. *Knowles*, 33 N. J. L, 202; *Evans* v. *Com.* 3 Met. 453; *Com.* v. *Miller*, 3 Cush. 243; *Com.* v. *Hancock Free Bridge Corp.* 2 Gray, 58; *U. S.* v. *Gooding*, 25 U. S. 12 Wheat. 460, 477 (6: 693); *Whiteford* v. *Com.* 6 Rand. 721; *S. C.* 18 Am. Dec. 771.

The insertion of the word *such* would operate to destroy the effect of the important word *all*. The word *all* is regarded as one of the most definite, important and technical words known to the English language.

Harrington v. *Smith*, 28 Wis. 43; *Demarest* v. *Wynkoop*, 3 Johns. Ch. 142; *Torrance* v. *McDougald*, 12 Ga. 530; *Collins* v. *Carman*, 5 Md. 505, 533; *Guest* v. *Opdyke*, 31 N. J. L. 552; *Latshaw* v. *McNees*, 50 Mo. 331; *Allgood* v. *Blake*, L. R. 7 Exch. 339; *Magrave* v. *White*, 8 Barn & C. 412; *Sidaway* v. *Hay*, 3 Barn. & C. 12.

A distinction cannot be made between contractual and compulsory obligations.

People v. *May*, 9 Colo. 404, 414; *Rollins* v. *Lake Co.* 34 Fed. Rep. 845.

A county has no powers except those conferred by law.

Ray Co. v. *Bentley*, 49 Mo. 236; *Mister* v. *City of Kansas*, 18 Mo. App. 217; *People* v. *State Treas.* 23 Mich. 504; *People* v. *Chicago*, 51 Ill. 34.

A municipal corporation, otherwise liable for negligence, would not be exempt from such liability by reason of being indebted to the constitutional limit.

Bloomington v. *Perdue*, 99 Ill. 329; *Buchanan* v. *Litchfield*, 102 U. S. 278 (26: 138.)

The phrase *for all purposes* includes debts without regard to the methods of their contraction.

People v. *May*, 9 Colo. 404.

Such orders, even when made payable to bearer, are not negotiable paper.

Jerome v. *Rio Grande Co.* 5 McCrary, 639, 18 Fed. Rep. 873; *Nashville* v. *Ray*, 86 U. S. 19 Wall. 468 (22: 164); *Wall* v. *Monroe Co.* 103 U. S. 74 (26: 430); *Ouachita Co.* v. *Wolcott*, 103 U. S. 559 (26: 505); *Claiborne Co.* v. *Brooks*, 111 U. S. 400 (28: 470).

An evidence of indebtedness, issued after the constitutional limit has been exceeded, is absolutely void.

McPherson v. *Foster*, 43 Iowa, 48; *Law* v. *People*, 87 Ill. 385; *Fuller* v. *Chicago*, 89 Ill. 282; *Prince* v. *Quincy*, 105 Ill. 138, 215; *Springfield* v. *Edwards*, 84 Ill. 626; *Litchfield* v. *Ballou*, 114 U. S. 190 (29: 132).

Mr. **Willard Teller**, for defendant in error:

To authorize an implied limitation, the implication must be a necessary one.

People v. *Rucker*, 5 Colo. 455; *People* v. *Wright*, 6 Colo. 92; *Alexander* v. *People*, 7 Colo. 155.

Neither the laws of the State nor its Constitution should be interpreted so as to deprive the county of power to effectuate the ends of their being.

Cooley, Const. Lim. 240 (5th ed.); 1 Dillon, Mun. Corp. § 23; *Hamilton Co.* v. *Mighels*, 7 Ohio St. 109; *Talbot Co.* v. *Queen Anne's Co.* 50 Md. 245; *State* v. *St. Louis Co. Ct.* 84 Mo. 570; *Ray Co.* v. *Bentley*, 49 Mo. 236.

The section must be so construed as to be consistent with the objects of the whole instrument and to secure effectiveness to all parts of it.

Platt v. *Union Pac. R. Co.* 99 U. S. 58 (25: 427); *U. S.* v. *Bassett*, 2 Story, 389; *Den* v. *DuBois*, 16 N. J. L. 285; *People* v. *Osborne*, 7 Colo. 605; *Opinion of Judges*, 22 Pick. 573; *Com.* v. *McCaughey*, 9 Gray, 297.

Courts are not confined to the exact words; these may be rejected or restrained.

Reiche v. *Smythe*, 80 U. S. 13 Wall. 163 (20: 566); *U. S.* v. *Buchanan*, 9 Fed. Rep. 639; *Bond* v. *Jay*, 11 U. S. 7 Cranch, 353 (3: 367); *Walker* v. *Springfield*, 94 Ill. 364.

General terms should be so limited in their application as not to lead to injustice, oppression or any absurd consequence.

U. S. v. *Fisher*, 6 U. S. 2 Cranch, 358 (2: 304); *Chinese Merchant* v. *Case*, 13 Fed. Rep. 605; *Southern Pac. R. Co.* v. *Orton*, 32 Fed. Rep. 457-477; Cooley, Const. Lim. 86-7; Dwar. Stat. Rule 4, p. 144; *Springfield* v. *Edwards*, 84 Ill. 626.

Where exceptions follow general words, or where certain specific things are subjected to a change or restriction, everything else, even of a similar nature, is excluded.

Broom, Legal Maxims, 515, 516, 517; *U. S.* v. *Fisher*, 6 U. S. 2 Cranch, 358, 387 (2: 304); *Re Bliss*, 9 Johns. 349; *Rex* v. *Richardson*, 1 Burr. 517; *Rex* v. *Bell*, 7 T. R. 600; Dwar. Stat. 221; *Gaddis* v. *Richland Co.* 92 Ill. 124; *Brush* v. *Lemma*, 77 Ill. 496.

General words following particular words apply to things *ejusdem generis*.

Reiche v. *Smythe*, 80 U. S. 13 Wall. 162 (20: 566); *U. S.* v. *Kirby*, 74 U. S. 7 Wall. 482 (19: 278); *U. S.* v. *Irwin*, 5 McLean, 178; *U. S.* v. *Saunders*, 89 U. S. 22 Wall. 492 (22: 786); *Chegaray* v. *New York*, 13 N. Y. 220.

The word *all* is a general, not a universal, term, and is to be understood and construed as used in one or the other sense according to the sense.

U. S. v. *Herron*, 87 U. S. 20 Wall. 251 (22: 275); *Stone* v. *Elliott*, 11 Ohio St. 258; *Kieffer* v. *Ehler*, 18 Pa. 391.

In construing a statute, a limiting clause is to be restricted to the last antecedent, where the matter itself does not prevent it.

Dwar. Stat. 209-210; *Cushing* v. *Worrick*, 9 Gray, 382; *Rex* v. *Wright*, 1 Ad. & El. 434, 448; *Stracey* v. *Nelson*, 12 Mees. & W. 541.

The practical construction given to a statute for some years, must be enforced, although not authorized by the laws of the land itself.

McKeen v. *Delancy*, 9 U. S. 5 Cranch, 22 (3: 25); *Edwards* v. *Darby*, 25 U. S. 12 Wheat. 206 (6: 603); *U. S.* v. *Ship Recorder*, 1 Blatchf. 222-26; *Miller* v. *McQuerry*, 5 McLean, 482; *Martin* v. *Hunter*, 14 U. S. 1 Wheat. 351 (4: 97); *Cohens* v. *Va.* 19 U. S. 6 Wheat. 264 (5: 257); *Rogers* v. *Goodwin*, 2 Mass. 477; Cooley, Const. Law, 81; *Chesnut* v. *Shane*, 16 Ohio, 599.

Provision must be made for payment of county officers.

People v. *Wright*, 6 Colo. 93; *People* v. *Draper*, 15 N. Y. 541-2; *People* v. *Fancher*, 50 N. Y. 291; *McCluskey* v. *Cromwell*, 11 N. Y. 601; *Ripley* v. *Gifford*, 11 Iowa, 367; *Baldwin* v. *Kouns*, 81 Ala. 272; *Gelpcke* v. *Dubuque*, 68 U. S. 1 Wall. 206 (17: 525); *Henderson* v. *Jackson Co.* 2 McCrary, 621.

Any doubt as to the proper construction of the Act must be solved in favor of good faith.

Moran v. *Miami Co.* 67 U. S. 2 Black, 722 (17: 342); *Com.* v. *Allegheny Co.* 32 Pa. 228.

Such indebtedness as springs from express or implied contracts, involving liability arising *ex delicto*, is a subject that is not contemplated by the provision.

Bloomington v. *Perdue*, 99 Ill. 329; *Chicago* v. *Sexton*, 3 West. Rep. 455, 115 Ill. 243; *Bartle* v. *Des Moines*, 38 Iowa, 415; *Davenport* v. *Lord*, 76 U. S. 9 Wall. 409 (19: 704); *U. S.* v. *Board of Auditors*, 28 Fed. Rep. 407; *Lyons* v. *Cooledge*, 89 Ill. 529.

When no decision of the state court had been had at the time contract was made, the court decides in accordance with the legal rights of the parties, in accordance with the construction put on a statute by the officers who execute it.

Douglass v. *Pike Co.* 101 U. S. 686 (25; 971); *Gelpcke* v. *Dubuque*, 68 U. S. 1 Wall. 206 (17: 525); *Burgess* v. *Seligman*, 107 U. S. 33 (27: 365); *Green Co.* v. *Conness*, 109 U. S. 104 (27: 872); *Pana* v. *Bowler*, 107 U. S. 540 (27: 428); *Carroll Co.* v. *Smith*, 111 U. S. 556 (28: 517); *Anderson* v. *Santa Anna*, 116 U. S. 356 (29: 633); *Bolles* v. *Brimfield*, 120 U. S. 759 (30: 786).

Little reliance ought to be placed on the discussion of a bill in Congress.

Mitchell v. *Great Works M. & Mfg. Co.* 2 Story, 648; 9 Ops. Atty-Gen. 58, 438; *Nicholson* v. *U. S.* Dev. Ct. Cl. 158; *Aldridge* v. *Williams*, 44 U. S. 3 How. 24 (11: 469).

Mr. Justice **Lamar** delivered the opinion of the court:

This action was instituted in the Circuit Court of the United States for the District of Colorado. It is a suit against the County of Lake, in that State, and is based on a large number of county warrants issued for the ordinary county expenses, such as witnesses' and jurors' fees, election costs, charges for the board of prisoners, county treasurer's commissions, etc.

The county has offered several defenses; but the view we take of the case renders it unnecessary to notice any save one.

The fifth defense offered is that of want of authority on the part of the county commissioners to issue the warrants in question or any of them. It is claimed that section six, article eleven, of the State Constitution of 1876, fixes a maximum limit, beyond which no county can contract any indebtedness, and that the warrants sued on were all issued after that limit had been reached, and even exceeded; and that they are all, for that reason, void.

The constitutional provision in question is as [663] follows:

"No county shall contract any debt by loan in any form, except for the purpose of erecting necessary public buildings, making or repairing public roads and bridges; and such indebtedness contracted in any one year shall not exceed the rates upon the taxable property in such county following, to wit: counties in which the assessed valuation of taxable property shall exceed five millions of dollars, one dollar and fifty cents on each thousand dollars thereof; counties in which such valuation shall be less than five millions of dollars, three dollars on each thousand dollars thereof; and the aggregate amount of indebtedness of any county, for all purposes, exclusive of debts contracted before the adoption of the Constitution, shall not at any time exceed twice the amount above herein limited, unless when, in manner provided by law, the question of increasing such debt shall, at a general election, be submitted to such of the qualified electors of such county as in the year last preceding such election shall have paid a tax upon property assessed to them in such county, and a majority of those voting thereon shall vote in favor of increasing the debt; but the bonds, if any be issued therefor, shall not run less than ten years; and the aggregate amount of debt so contracted shall not at any time exceed twice the rate upon the valuation last herein mentioned; *Provided*, That this section shall not apply to counties having a valuation of less than one million of dollars."

To this defense the plaintiff below responded to the effect that the provision quoted was not applicable to the warrants in question; that it is properly applicable only to debts created by loan, for the purpose of erecting necessary public buildings or making or repairing public roads and bridges; and that as to debts so created by loan for the purposes designated and as to them alone, a limitation of amount is fixed, first, as to the sum that may be incurred in any one year, and secondly, as to the aggregate sum that may be incurred by the accumulating debts of more than one year; and that these objects and restrictions exhaust the scope of the provision.

[664] The cause was tried below on an agreed state of facts, before the court, on the written waiver of a jury. In the agreement is found the following stipulation:

"It is further stipulated and agreed that if section six (6) of article eleven (11) of the Constitution of the State of Colorado, be construed to be a limitation upon the power of defendant county to contract any and all indebtedness, including all such as that sued upon in this action, then it is admitted that the claimed indebtedness sued on herein was incurred after the limitation prescribed by said Constitution had been reached and exceeded by the said defendant, the County of Lake; and in the event of such a construction by this court, or the Supreme Court of the United States, then and in that case, and for the purposes of this action, it is hereby also admitted that all the allegations of the fifth separate defense to this action of the answer of the defendant are true and correct, and the defendant entitled to judgment thereon."

The court below held (34 Fed. Rep. 845): *First*, that the said section six, in all of its sentences, does not refer exclusively to debts contracted by loan, but there are two independent declarations in it, the second declaration beginning with the words, "and the aggregate amount of indebtedness of any county, for all purposes, etc.;" *secondly*, that in determining whether the limit of county indebtedness, fixed by the second declaration, had been reached, it is immaterial how any particular portion of the indebtedness arose; but that, *thirdly*, when such limit had been reached, while the power of the county to incur further debt by contract was suspended, the liability for further amounts in the shape of fees and salaries, and other "compulsory obligations" imposed by the will of the Legislature, remained and was enforceable. Proceeding on this idea, the circuit court rendered judgment in favor of the plaintiff below; whereupon the county brought the case here by writ of error.

We are unable to assent either to the conclusions of the court below, or to the positions of defendant in error. The language of the sixth section seems to be neither complicated nor doubtful; and we think it plain that what is meant is exactly what is said; no more and no less. It deals with the subject of county debts, and, to begin with, assumes a unit of measurement which is one and one half dollars in the thousand of assessed values; that is, one and and half mills on the dollar. This is about equal to the average amount of taxes levied for county purposes per annum under normal conditions. The provision then proceeds as follows:

First. It provides that no county shall borrow money in any way;

Secondly. Exception is then made in favor of the erection of necessary public buildings, and the making or repairing of public roads and bridges; and,

Thirdly. The loans allowed by the foregoing exception to be taken in any one year are limited to the amount of one and one half mills on assessed values in one class of counties, and three mills in another class.

Here the matter of indebtedness by loan is completed; and the section passes to a broader subject. Manifestly, the purpose of the collocation of the two passages in one section is not that by a wrested reading the latter may yet further limit and complicate the power of borrowing; but that the meaning of the latter passage may be more sharply and clearly defined and emphasized by an antithesis. It is an example not of inadvertence, but of good rhetoric, as if special attention had been by discussion and care given to the wording of the section.

The next provisions are:

Fourthly. That the aggregate debt of any [670] county for all purposes (exclusive of debts contracted before the adoption of the Constitution) shall not at any time exceed the sum of three mills (or six, as the case might be) on assessed values; unless the taxpayers vote in favor of such excess, at some general election; and

Fifthly. That even when an election has been held, the aggregate debt so contracted shall not exceed, at any one time, the sum of six mills (or twelve as the case might be) on the assessed values.

We are unable to adopt the constructive interpolations ingeniously offered by counsel for defendant in error. Why not assume that the framers of the Constitution, and the people who voted it into existence, meant exactly what it says? At the first glance, its reading produces no impression of doubt as to the meaning. It seems all sufficiently plain; and in such case there is a well settled rule which we must observe. The object of construction, applied to a Constitution, is to give effect to the intent of its framers, and of the people in adopting it. This intent is to be found in the instrument itself; and when the text of a constitutional provision is not ambiguous the courts, in giving construction thereto, are not at liberty to search for its meaning beyond the instrument.

To get at the thought or meaning expressed in a statute, a contract or a Constitution, the first resort, in all cases, is to the natural signification of the words, in the order of grammatical arrangement in which the framers of the instrument have placed them. If the words convey a definite meaning, which involves no absurdity nor any contradiction of other parts of the instrument, then that meaning, apparent on the face of the instrument, must be accepted, and neither the courts nor the Legislature have the right to add to it or take from it. *Newell* v. *People*, 7 N. Y. 97; *Hills* v. *Chicago*, 60 Ill. 86; *Denn* v. *Reid*, 35 U. S. 10 Pet. 524 [9: 519]; *Leonard* v. *Wiseman*, 31 Md. 204; *People* v. *Potter*, 47 N. Y. 375; Cooley, Const. Lim. p. 57; Story, Const. § 400; *Beardstown* v. *Virginia*, 76 Ill. 34. So, also, where a law is expressed in plain and unambiguous terms whether those terms are general or limited, the Leg- [671] islature should be intended to mean what they have plainly expressed, and consequently no room is left for construction. *United States* v. *Fisher*, 6 U. S. 2 Cranch, 358, 399 [2: 304, 317]; *Doggett* v. *Florida R. Co.* 99 U. S. 72 [25: 301].

There is even stronger reason for adhering to this rule in the case of a Constitution than in that of a statute, since the latter is passed by a deliberative body of small numbers, a large proportion of whose members are more or less conversant with the niceties of construction and discrimination, and fuller opportunity ex-

ists for attention and revision of such a character, while Constitutions, although framed by conventions, are yet created by the votes of the entire body of electors in a State, the most of whom are little disposed, even if they were able, to engage in such refinements. The simplest and most obvious interpretation of a Constitution, if in itself sensible, is the most likely to be that meant by the people in its adoption.

Such considerations give weight to that line of remark of which *People* v. *Purdy*, 2 Hill, 35, affords an example. There, Bronson, *J.*, commenting upon the danger of departing from the import and meaning of the language used to express the intent, and hunting after probable meanings not clearly embraced in that language, says: "In this way the Constitution is made to mean one thing by one man and something else by another, until in the end it is in danger of being rendered a mere dead letter, and that, too, when the language is so plain and explicit that it is impossible to mean more than one thing, unless we lose sight of the instrument itself and roam at large in the fields of speculation."

Words are the common signs that mankind make use of to declare their intention to one another; and when the words of a man express his meaning plainly, distinctly and perfectly, we have no occasion to have recourse to any other means of interpretation.

Defendant in error insists that the interpretation contended for by the county leads to certain absurd consequences, viz., that it is senseless to limit the power of a county to incur [672] debt generally, since its exercise of such a power may, by sudden exigencies, become imperatively necessary to the discharge of its functions; that it would be to require the county to provide in advance by taxation or otherwise, for the payment of expenses, which, from their nature, can only be guessed at; that it would be to enable any county in two years, by a vote and a loan, to exhaust the whole possible indebtedness in the way of buildings, roads and bridges, leaving no margin for other necessities; that it would be to destroy the county governments, since the county officials and others will not work for nothing, and the margin of possible debt is, in nearly all the counties, already reached; and that it would be to avoid nearly all the tax payments heretofore made in warrants. All of these objections could well be answered from the facts as disclosed by the bill of exceptions; but it is not necessary.

We cannot say, as a matter of law, that it was absurd for the framers of the Constitution for this new State to plan for the establishment of its financial system, on a basis that should closely approximate the basis of cash. It was a scheme favored by some of the ablest of the earlier American statesmen. Nor can the fact disclosed in the bill of exceptions, that, after the adoption of the State Constitution, the county officials and many of the people, designedly or undesignedly, disregarded the constitutional rule, render the plan absurd. If it was a mistaken scheme, if its operation has proved or shall prove to be more inconvenient than beneficial, the remedy is with the people, not with the courts.

In *Wisconsin Cent. R. Co.* v. *Taylor County*, 52 Wis. 37, the court says: "We have been urged with great ability to give the section such construction as to forever prevent unjust discrimination by the Legislature; and grave consequences have been assumed as the result of a different construction. On the other hand, we have been urged with equal ability that such a decision would unseat many titles, stop revenue, necessitate a revision of the laws of taxation, and possibly the calling of a constitutional convention. The answer to all this is obvious. It is no part of the duty of the court to make or unmake, but simply to construe this provision of the Constitution. All questions of policy; all questions of restriction [673] and unjust discrimination; all questions of flexibility and adjustability to meet the varied wants and necessities of the people—must be regarded as having been fully considered and conclusively determined by the adoption of the Constitution. The oath of all is to support it as it is, and not as it might have been. To do so may, in some cases, lead to individual hardships; but to do otherwise would be most portentous with evil." In *Law* v. *People*, 87 Ill. 395, the court said: "But, should it work hardship to individuals, that by no means warrants the violation of a plain and emphatic provision of the Constitution. The liberty of the citizen, and his security in all his rights, in a large degree depend upon a rigid adherence to the provisions of the Constitution and the laws, and their faithful performance. If courts, to avoid hardships, may disregard and refuse to enforce their provisions, then the security of the citizen is imperiled. Then the will, it may be the unbridled will, of the judge would usurp the place of the Constitution and the laws; and the violation of one provision is liable to speedily become a precedent for another, perhaps more flagrant, until all constitutional and legal barriers are destroyed, and none are secure in their rights. Nor are we justified in resorting to strained construction or astute interpretation, to avoid the intention of the framers of the Constitution, or the statutes adopted under it, even to relieve against individual or local hardships. If unwise or hard in their operation, the power that adopted can repeal or amend, and remove the inconvenience. The power to do so has been wisely withheld from the courts, their functions only being to enforce the laws as they find them enacted."

In the light of these principles, expressed in the authorities quoted and in many others, we must decline to read the expression in section six, "and the aggregate amount of indebtedness of any county, for *all* purposes," etc., as if it were written "and the aggregate amount of *such* indebtedness," etc. This the defendant in error concedes to be necessary to his case. We see no admissible reason for the introduction [674] of this restrictive word *such*, except to alter radically the plain meaning of the sentence.

Neither can we assent to the position of the court below that there is, as to this case, a difference between indebtedness incurred by contracts of the county and that form of debt denominated "compulsory obligations." The compulsion was imposed by the Legislature of the State, even if it can be said correctly that the compulsion was to incur debt; and the Legislature could no more impose it than the coun-

ty could voluntarily assume it, as against the disability of a constitutional prohibition. Nor does the fact that the Constitution provided for certain county officers, and authorized the Legislature to fix their compensation and that of other officials, affect the question. There is no necessary inability to give both of the provisions their exact and literal fulfillment.

In short, we conclude that article six aforesaid is "a limitation upon the power of the county to contract any and all indebtedness, including all such as that sued upon in this action;" and therefore, under the stipulation already set forth, the county is entitled to judgment.

Wherefore, the judgment of the Court below is reversed, and the case is remanded to that Court, with a direction to enter judgment for the defendant.

---

[674] THE BOARD OF COUNTY COMMISSIONERS OF THE COUNTY OF LAKE, *Plff. in Err.*,

v.

BENJAMIN GRAHAM.

(See S. C. Reporter's ed. 674-684.)

Municipal bonds—recitals, do not extend to matters of law—fact ascertainable by record—when recitals do not cover such fact—amount of assessed valuation—constitutional requirements cannot be dispensed with by the Legislature—legislative exactions.

1. The purchaser of municipal bonds is held to know the constitutional provisions and the statutory restrictions bearing on the question of the authority to issue them; also the recitals of the bonds he buys; while, on the other hand, if he acts in good faith and pay value, he is entitled to the protection of such recitals of facts as the bonds may contain.

2. Where the recitals of the bonds are merely to the effect that the statute has been fully complied with, and there is no recital that the constitutional requirements have been observed, there is no estoppel as to the constititutional question.

3. A recital does not extend to or cover matters of law; and a certificate reciting the actual facts, and that thereby the bonds were conformable to the law, when, judicially speaking, they are not, will not make them so, nor can it work an estoppel upon the county to claim the protection of the law.

4. If the fact necessary to the existence of the authority is by law to be ascertained, not officially by the officers charged with the execution of the power, but by reference to some express and definite record of a public character, then the authority to act will depend upon the existence of the requisite fact as shown by the record, and not upon its ascertainment and determination by anyone.

5. All persons claiming under the exercise of such a power may be put to proof of the fact made a condition of its lawfulness, notwithstanding any recitals in the instrument.

6. No recital as to the amount of the assessed taxable valuation of the property to be taxed for the payment of the bonds can take the place of the assessment itself, where the amount as fixed by reference to that record is made by the Constitution the standard for measuring the limit of the municipal power, and the ascertainment of that fact is not submitted to the county officers.

7. Where the standard of validity is created by the Constitution and in that standard two factors are to be considered, one the amount of assessed value, and the other the ratio between that assessed value and the debt proposed, these being exactions of the Constitution itself, it is not within the power of a Legislature to dispense with them, either directly or indirectly, by the creation of a ministerial commission whose finding shall be taken in lieu of the facts.

8. Where the Legislature, being the source of exaction, has created a board authorized to determine whether such exaction has been complied with, its finding is conclusive as to a *bona fide* purchaser.

[No. 1265].

Submitted Jan. 3, 1889. Decided May 13, 1889.

IN ERROR to the Circuit Court of the United States for the District of Colorado, to review a judgment in favor of plaintiff in a suit against a county in the State of Colorado to recover on coupons for interest on bonds issued by the county. *Reversed.*

The facts are stated in the opinion.

Messrs. **Daniel E. Parks** and **H. B. Johnson** for plaintiff in error

Messrs. **Robert E. Foot** and **Willard Teller** for defendant in error.

Mr. Justice **Lamar** delivered the opinion of the court: [675]

This action was instituted in the Circuit Court of the United States for the District of Colorado.

It is a suit against the County of Lake, in that State, and is based on one hundred and ninety-eight coupons, aggregating the sum of $7,280, and being for interest on certain bonds issued by the county on the second of January, 1882.

The case was tried in the court below on an agreed statement of facts, which is in the bill of exceptions. From that agreement it appears that the bonds, from which the coupons sued on were detached, were executed in exchange for divers warrants of the county, to the amount of five hundred thousand dollars; that they were executed in compliance with an Act of the General Assembly of Colorado, entitled "An Act to Enable the Several Counties of the State to Fund their Floating Indebtedness;" [676] that the indebtedness of the county on the 6th day of September, 1881, the day the first notice was published under the Act, as evidenced by county warrants, was $500,000, and the assesed valuation of the property of said county on said day was $16,423,403, afterwards rebated, in 1882, to $5,017,000, in accordance with a decision of the supreme court; and that such was the indebtedness and valuation on the day the bonds and coupons were issued.

There is also in the record an agreement between the parties that if section six of article eleven of the Constitution of the State of Colorado be construed to be a limitation upon the power of the defendant county to contract any and all indebtedness, including all such as that sued upon in this action, then it is admitted that the claimed indebtedness sued on herein was incurred after the limitation prescribed by said Constitution had been reached and exceeded by the said defendant, the County of Lake; and in the event of such a construction by the Circuit Court, or the Supreme Court of the United States, then and in that case, and for the purposes of the action, it is also admitted that the defendant is entitled to judgment thereon, unless the defendant is estopped

---

NOTE.—*Recitals in negotiable bonds or securities evidence of the facts recited. Estoppel by recitals in.* See Mercer Co. v. Hackett, 68 U. S. 17 L. ed. 548 and *note.*

from making such defense by the recitals contained on the face of the bonds and coupons sued on in this action.

In the case of *Commissioners of Lake County* v. *Rollins, ante,* 1060, we have set forth said section 6, and have decided that it does impose "a limitation upon the power of the defendant county to contract any and all indebtedness." That decision disposes of the first condition in the agreement recited above. It only remains to decide whether the county is estopped from making such defense by the recitals contained on the face of such bonds and coupons. The bonds and coupons are as follows:

"No.——— $———.

"United States of America, County of Lake, State of Colorado.

Funding bond. Series ———

[677] "The County of Lake, in the State of Colorado, acknowledges itself indebted and promises to pay to ——— ———, or bearer, ——— ———dollars, lawful money of the United States, for value received, redeemable at the pleasure of the said county, after ten years, and absolutely due and payable twenty years from the date hereof, at the office of the treasurer of the said county, in the City of Leadville, or at the banking house of Jesup, Paton & Co., in the City of New York, at the option of the holder, with interest thereon at the rate of eight per cent per annum, payable semi-annually, on the first day of January and the first day of July in each year, at the office of the county treasurer aforesaid, or at the banking house of Jesup, Paton & Co., in the City of New York, at the option of the holder, upon the presentation and surrender of the annexed coupons as they severally become due.

"This bond is one of 710 funding bonds, each of like date, comprised in three series, designated 'A,' 'B,' and 'C,' respectively, series 'A' consisting of 450 bonds for the sum of one thousand dollars each, numbered from 1 to 450, both numbers inclusive; series 'B' consisting of 60 bonds for the sum of five hundred dollars each, numbered from 451 to 510, both numbers inclusive; and series 'C' consisting of 200 bonds for the sum of one hundred dollars each, numbered from 511 to 710, both numbers inclusive, the whole amounting to five hundred thousand dollars, which the Board of County Commissioners of said Lake County have issued under and by virtue of and in full compliance with an Act of the General Assembly of the State of Colorado entitled 'An Act to Enable the Several Counties of the State to Fund Their Floating Indebtedness,' approved February 21, 1881; and it is hereby certified that all the provisions and requirements of said Act have been fully complied with by the proper officers in the issuing of this bond. It is further certified that this issue of bonds has been authorized by a vote of a majority of the duly qualified electors of said County of Lake, voting on the question at a general election duly held in said county on the 8th day of November, A. D. 1881.

"The faith and credit of the County of Lake are hereby pledged for the punctual payment of the principal and interest of this bond.

[678] "In testimony whereof the Board of County Commissioners of the said County of Lake has caused this bond to be signed by its chairman, countersigned by the county treasurer, and attested by the county clerk, under the seal of the county, this second day of January, A. D. 1882.

"Attest:

———, *County Clerk.*

"[County seal.

———, *"Chairman Board of County Commissioners."*

Section one of the Act under which the bonds were issued is as follows:

"SEC. 1. It shall be the duty of the county commissioners of any county having a floating indebtedness exceeding ten thousand dollars, upon the petition of fifty of the electors of said counties (county) who shall have paid taxes upon property assessed to them in said county in the preceding year, to publish for the period of thirty days, in a newspaper within said county, a notice requesting the holders of the warrants of such county to submit, in writing, to the board of county commissioners, within thirty days from the date of the first publication of such notice, a statement of the amount of the warrants of such county which they will exchange, at par and accrued interest, for the bonds of such county, to be issued under the provisions of this Act, taking such bonds at par. It shall be the duty of such board of county commissioners, at the next general election occurring after the expiration of thirty days from the date of the first publication of the notice aforementioned, upon the petition of fifty of the electors of such county, who shall have paid taxes upon property assessed to them in said county in the preceding year, to submit to the vote of the qualified electors of such county, who shall have paid taxes on property assessed to them in said county in the preceding year, the question whether the board of county commissioners shall issue bonds of such county, under the provisions of this Act, in exchange, at par, for the warrants of such county, issued prior to the date of the first publication of the aforesaid notice; or they may submit such question at a special election, which they are hereby em- [679] powered to call for that purpose, at any time after the expiration of thirty days from the date of the first publication of the notice aforementioned, on the petition of fifty qualified electors as aforesaid; and they shall publish, for the period of at least thirty days immediately preceding such general or special election, in some newspaper published within such county, a notice that such question will be submitted to the duly qualified electors as afore-

said at such election. The county treasurer of such county shall make out and cause to be delivered to the judges of election, in each election precinct in the county, prior to the said election, a certified list of the taxpayers in such county who shall have paid taxes upon property assessed to them in such county in the preceding year; and no person shall vote upon the question of the funding of the county indebtedness unless his name shall appear upon such list, nor unless he shall have paid all county taxes assessed against him in such county in the preceding year. If a majority of the votes lawfully cast upon the question of such funding of the county indebtedness shall be for the funding of such indebtedness, the board of county commissioners may issue to any person or corporation holding any county warrant or warrants, issued prior to the date of the first publication of the aforementioned notice, coupon bonds of such county in exchange therefor at par. No bonds shall be issued of less denomination than one hundred dollars, and if issued for a greater amount, then for some multiple of that sum, and the rate of interest shall not exceed eight per cent per annum—the interest to be paid semi-annually, at the office of the county treasurer, or in the City of New York, at the option of the holders thereof. Such bonds to be payable at the pleasure of the county, after ten years from the date of their issuance, but absolutely due and payable twenty years after date of issue. The whole amount of bonds issued under this Act shall not exceed the sum of the county indebtedness at the date of the first publication of the aforementioned notice, and the amount shall be determined by the county commissioners, and a certificate made of the same, and made a part of the records of the county; and any bond [680] issued in excess of said sum shall be null and void; and all bonds issued under the provisions of this Act shall be registered in the office of the state auditor, to whom a fee of ten cents shall be paid for recording each bond."

Nothing is better settled than this rule—that the purchaser of bonds, such as these, is held to know the constitutional provisions and the statutory restrictions bearing on the question of the authority to issue them; also the recitals of the bonds he buys; while, on the other hand, if he act in good faith and pay value, he is entitled to the protection of such recitals of facts as the bonds may contain.

In this case the Constitution charges each purchaser with knowledge of the fact that, as to all counties whose assessed valuation equals one million of dollars, there is a maximum limit beyond which those counties can incur no further indebtedness under any possible conditions, provided that, in calculating that limit, debts contracted before the adoption of the Constitution are not to be counted. The statute, on the other hand, charges the purchaser with knowledge of the fact that the county commissioners were to issue bonds at par in exchange for such warrants of the county as were themselves issued prior to the date of the first publication of the notice provided for; that the only limitation on the issue of bonds in the statute was that the bonds should not exceed in amount the sum of the county indebtedness on the day of notice aforesaid; that while the commissioners were empowered to determine the amount of such indebtedness, yet the statute does not refer that board, for the elements of its computation, to the Constitution or to the standards prescribed by the Constitution, but leaves it open to them, without departing from any direction of the statute, to adopt solely the basis of the county warrants. The recitals of the bonds were merely to the effect that the issue was "under and by virtue of, and in full compliance with," the statute; "that all the provisions and requirements of said Act have been fully complied with by the proper officers in the issuing of this bond;" and that the issuing was "authorized by a vote of a majority of the duly qualified electors," etc., no express reference being made to the Constitution, nor any statement [681] made that the constitutional requirements had been observed.

There is, therefore, no estoppel as to the constitutional question, because there is no recital in regard to it. *Carroll Co.* v. *Smith*, 111 U. S. 556 [28: 517]. It is true, it might be said, that inasmuch as the bonds recite that all the requirements of the statute had been fully complied with by the proper officers, and inasmuch as one of those requirements was that the officers should determine the amount of the county debt, the inference is fair and reasonable that the statute meant only that they should count what was a just and actual debt, not claims that were void and therefore no debt; and that the recital made was in effect a statement that the whole matter had been examined by the board, and that they had issued bonds for only such warrants as were found to be issued in conformity to the law, the whole law—fundamental as well as statute. Waiving the question as to whether such a conclusion, persuasive as it might be in other aspects of a cause, is not too remote and indirect for the basis of an estoppel, the avowed object of which is to exclude from consideration the truth, still how could the case be any better for the defendant in error? Had the bond expressly stated that the board canvassed the debt and found the same to be binding and valid under the law and the Constitution, and that the same was $500,000, the recital would not be an estoppel. It must be remembered that these bonds show on their face an issue of $500,000. In the case of *Dixon County* v. *Field*, 111 U. S. 83, 92 [28: 360, 363], this court said:

"Recurring, then, to a consideration of the recitals in the bonds, we assume, for the purposes of this argument, that they are in legal effect equivalent to a representation, or warranty, or certificate on the part of the county officers, that everything necessary by law to be done has been done, and every fact necessary by law to have existed did exist, to make the bonds lawful and binding. Of course, this does not extend to or cover matters of law. All parties are equally bound to know the law; and a certificate reciting the actual facts, and that thereby the bonds were conformable to the law when, judicially speaking, they are not, [682] will not make them so, nor can it work an estoppel upon the county to claim the protection of the law. Otherwise it would always be

in the power of a municipal body to which power was denied to usurp the forbidden authority, by declaring that its assumption was within the law. This would be the clear exercise of legislative power, and would suppose such corporate bodies to be superior to the law itself."

Now, while it is true that the bonds show on their face an issue of $500,000, yet it is also true that neither the Constitution nor the statute, nor the bond, shows the amount of the valuation of the county; and it therefore might be said that, for this reason, and notwithstanding the purchaser's knowledge of the limit and his knowledge that $500,000 of debt was incurred, yet he might not have known that the limit had been exceeded, being ignorant of the other term in the calculation, that of the amount of the assessed values, and that the recital of conformity, misleading him, would operate as an estoppel.

This question is settled in the case of *Dixon Co.* v. *Field, supra.* The court there says, p. 98 [364]:

"If the fact necessary to the existence of the authority was by law to be ascertained, not officially by the officers charged with the execution of the power, but by reference to some express and definite record of a public character, then the true meaning of the law would be that the authority to act at all depended upon the actual objective existence of the requisite fact, as shown by the record, and not upon its ascertainment and determination by anyone; and the consequence would necessarily follow that all persons claiming under the exercise of such a power might be put to proof of the fact made a condition of its lawfulness, notwithstanding any recitals in the instrument." "The amount of the bonds issued was known. It is stated in the recital itself. It was $87,000. The holder of each bond was apprised of that fact. The amount of the assessed value of the taxable property in the county is not stated; but, *ex vi termini*, it was ascertainable in one way only, and that was by reference to the assessment itself, a public record equally accessible to all intending purchasers of bonds, as well as to the county officers. This being known, the ratio between the two amounts was fixed by an arithmetical calculation. No recital involving the amount of the assessed taxable valuation of the property to be taxed for the payment of the bonds can take the place of the assessment itself, for it is the amount as fixed by reference to that record that is made by the Constitution the standard for measuring the limit of the municipal power. Nothing in the way of inquiry, ascertainment or determination as to that fact is submitted to the county officers. They are bound, it is true, to learn from the assessment what the limit upon their authority is, as a necessary preliminary in the exercise of their functions and the performance of their duty; but the information is for themselves alone. All the world besides must have it from the same source, and for themselves. The fact, as it is recorded in the assessment itself, is extrinsic and proves itself by inspection, and concludes all determinations that contradict it."

[683]

To the suggestion that the purchaser was not chargeable with knowledge of the fact that the maximum of 12 mills on the dollar had been exceeded—for the $500,000 of debt ascertained to be due on the day of notice, and for which bonds were issued, might have been partly or wholly created before the Constitution was adopted, and therefore be excluded from the rule by the very terms of the Constitution itself—there are two decisive answers. *First*, the bill of exceptions shows that the debt was not so created either in whole or in part. *Second*, the defendant in error is not entitled to an estoppel even if such an inference might have been drawn from the recital of conformity. The cases just cited show that the records are the only source of information.

The question here is distinguishable from that in the cases relied on by counsel for defendant in error. In this case the standard of validity is created by the Constitution. In that standard two factors are to be considered; one the amount of assessed value, and the other the ratio between that assessed value and the debt proposed. These being exactions of the Constitution itself, it is not within the power of a Legislature to dispense with them, either directly or indirectly, by the creation of a ministerial commission whose finding shall be taken in lieu of the facts. [684]

In the case of *Sherman County* v. *Simons*, 109 U. S. 735 [27: 1093], and others like it, the question was one of estoppel as against an exaction imposed by the Legislature; and the holding was that the Legislature, being the source of exaction, had created a board authorized to determine whether its exaction had been complied with, and that its finding was conclusive to a *bona fide* purchaser. So also in *Oregon* v. *Jennings*, 119 U. S. 74 [30: 323], the condition violated was not one imposed by the Constitution, but one fixed by the subscription contract of the people.

For these reasons, and under the stipulation above recited, the judgment of the Court below is reversed, and the case is remanded to that Court, with a direction to enter judgment for the defendant.

CHAE CHAN PING, *Appt.*, [581]
v.
UNITED STATES.

"THE CHINESE EXCLUSION CASE."

(See S. C. Reporter's ed. 581-611)

Chinese laborers—Act prohibiting their entering the United States, valid—treaties are subject to Acts of Congress—treaty rights—Government may exclude aliens—sovereign powers.

1. The Act of Congress of October 1, 1888, prohibiting Chinese laborers from entering the United States who had departed before its passage, having a certificate issued under the Act of 1882 as amended by the Act of 1884 granting them permission to return, is valid.

2. Although the Act of 1888 is in contravention of express stipulations of the Treaty of 1868 and of the Supplemental Treaty of 1880, it is not on that account invalid or to be restricted in its enforcement.

3. Treaties are of no greater legal obligation than an Act of Congress, and are subject to such Acts as Congress may pass for their enforcement, modification, or repeal.

4. The question whether our Government is justified in disregarding its engagements with another

nation is not one for the determination of the courts.

5. The Government of the United States, through the action of the legislative department, can exclude aliens from its territory, although no actual hostilities exist with the nation of which the aliens are subjects.

6. The power of exclusion of foreigners is an incident of sovereignty and the right to its exercise cannot be granted away or restrained on behalf of anyone.

[No. 1446.]

Argued March 28, 29, 1889. Decided May 13, 1889.

APPEAL from an order of the Circuit Court of the United States for the Northern District of California, refusing to release appellant on a writ of *habeas corpus* from his alleged unlawful detention by the master of a steamship, the appellant being a Chinese laborer, seeking to return to the United States and having a certificate entitling him to return pursuant to the Act of May 6, 1882, as amended by the Act of July 5, 1884. *Affirmed.*

See *S. C.* below, 36 Fed. Rep. 431.

The facts are stated in the opinion.

Messrs. **George Hoadley** and **James C. Carter**, for appellant:

Rights of Chae Chan Ping.—No nation has the right to close its doors to foreigners.

Woolsey, Int. Law, 5th ed. § 63; Bluntschli, Das Moderne Voelkerrecht der Civilisirten Staaten, § 381, 382d rule.

The treaty being a law of the United States, he took, under it, rights, of which he cannot be deprived by subsequent legislation.

Edye v. *Robertson*, 112 U. S. 580 (28:798); *Chew Heong* v. *U. S.* 112 U. S. 536 (28:770).

The termination of a treaty does not devest rights of property already vested under it.

Society for the Propagation of the Gospel v. *New Haven*, 21 U. S. 8 Wheat. 464 (5:662); *Mc Clurg* v. *Kingsland*, 42 U. S. 1 How. 206 (11:102.)

The relation is incapable of dissolution at the instance of the promisor alone, whatever right the promisee might have to rescind.

Townsley v. *Sumrall*, 27 U. S. 2 Pet. 182 (7:386); Poste's Gaius, 372, 374; Digest, 9, 5, 15, 22, 25; Sanders, Institutes of Justinian, 419; 1 Pars. Cont. 429; *Thomas* v. *Thomas*, 2 Q. B. 851; *Dartmouth College* v. *Woodward*, 17 U. S. 4 Wheat. 655 (4:629); *Shuey* v. *U. S.* 92 U. S. 73 (23:697); *Loring* v. *Boston*, 7 Met. 409; *Janvrin* v. *Exeter*, 48 N. H. 83; *Bank of Augusta* v. *Earle*, 38 U. S. 13 Pet. 595 (10:274.)

The legislative purpose manifested in the statute is plain and clear, to vest appellant with the right to re-enter the United States.

Fletcher v. *Peck*, 10 U. S. 6 Cranch, 87 (3:162.)

Appellant's right to return to the United States is not revocable by Act of Congress.

Knapp v. *Thomas*, 39 Ohio St. 377; *Ex parte Garland*, 71 U. S. 4 Wall. 380 (18:370); *Sinking Fund Cases*, 99 U. S. 700 (25:496.)

Chae Chan Ping is a "person" within the protection of the Fifth Amendment to the Constitution of the United States.

Woolsey, Int. Law, 5th ed § 71; Story, Conf. L. § 41.

The expulsion of Chinese laborers is not the exercise of police powers.

Munn v. *Ill.* 94 U. S. 142 (24:90); *Mugler* v. *Kan.* 123 U. S. 661 (31:210); *Barbier* v. *Connolly*, 113 U. S. 31 (28:924); *New York City* v. *Miln*, 36 U. S. 11 Pet. 102, 139 (9:648); *U. S.* v. *Cruikshank*, 92 U. S. 542 (23:588); *Presser* v. *Ill.* 116 U. S. 266 (29:619).

Appellant's expulsion is an *ex post facto* attainder.

Dauphin v. *Key*, MacArth. & Mack. 208; *Cummings* v. *Mo.* 71 U. S. 4 Wall. 277 (18:356); *Ex parte Garland*, 71 U. S. 4 Wall. 377 (18:369); *Pierce* v. *Carskadon*, 83 U. S. 16 Wall. 234 (21:276); *Blair* v. *Ridgely*, 41 Mo. 63; *Re Yung Sing Hee*, 36 Fed Rep. 437; *Re Look Tin Sing*, 21 Fed. Rep. 910; *Re Wy Shing*, 36 Fed. Rep. 553; *Kitham* v. *Ward*, 2 Mass. 296.

Messrs. **G. A. Johnson**, *Atty. Gen. of California*, **Stephen M. White**, **John F. Swift** and **G. A. Jenks**, *Solicitor-Gen.*, for appellee:

Subsequent legislation may municipally abrogate a treaty.

Cherokee Tobacco, 78 U. S. 11 Wall. 616 (20:227); *Taylor* v. *Morton*, 2 Curtis, 454; *Ropes* v. *Clinch*, 8 Blatchf. 304; *Re Ah Lung*, 18 Fed. Rep. 28, 9 Sawy. 307; *Whitney* v. *Robertson*, 124 U. S. 190 (31:386); *Head Money Cases*, 112 U. S. 580 (28:798); *U. S.* v. *McBratney*, 104 U. S. 621 (26:869); *Bartram* v. *Robertson*, 15 Fed. Rep. 212; 1 Kent, Com. marg. p. 287.

Mr. Justice **Field** delivered the opinion of the court:

This case comes before us on appeal from an order of the Circuit Court of the United States for the Northern District of California refusing to release the appellant, on a writ of *habeas corpus*, from his alleged unlawful detention by Captain Walker, master of the steamship Belgic, lying within the Harbor of San Francisco. The appellant is a subject of the Emperor of China and a laborer by occupation. He resided at San Francisco, California, following his occupation, from some time in 1875 until June 2, 1887, when he left for China on the steamship Gaelic, having in his possession a certificate in terms entitling him to return to the United States bearing date on that day, duly issued to him by the Collector of Customs of the Port of San Francisco, pursuant to the provisions of section four of the Restriction Act of May 6, 1882, as amended by the Act of July 5, 1884. (22 Stat. at L. 59, chap. 126; 23 Stat. at L. 115, chap. 220.) [582]

On the 7th of September, 1888, the appellant, on his return to California, sailed from Hong Kong in the steamship Belgic, which arrived within the Port of San Francisco on the 8th of October following. On his arrival he presented to the proper custom house officers his certificate and demanded permission to land. The collector of the port refused the permit, solely on the ground that under the Act of Congress, approved October 1, 1888, supplementary to the Restriction Acts of 1882 and 1884, the certificate had been annulled and his right to land abrogated, and he had been thereby forbidden again to enter the United States. (25 Stat. at L. 504, chap. 1064). The captain of the steamship, therefore, detained the appellant on board the steamer. Thereupon a petition on his behalf was presented to the Circuit Court of the United States for the Northern District of California, alleging that he was unlawfully restrained of his liberty, and praying that a writ

of *habeas corpus* might be issued directed to the master of the steamship, commanding him to have the body of the appellant, with the cause of his detention, before the court at a time and place designated, to do and receive what might there be considered in the premises. A writ was accordingly issued, and in obedience to it the body of the appellant was produced before the court. Upon the hearing which followed. the court, after finding the facts substantially as stated, held as conclusions of law that the appellant was not entitled to enter the United States, and was not unlawfully restrained of his liberty, and ordered that he be remanded to the custody of the master of the steamship [583] from which he had been taken under the writ. From this order an appeal was taken to this court.

The appeal involves a consideration of the validity of the Act of Congress of October 1, 1888, prohibiting Chinese laborers from entering the United States who had departed before its passage, having a certificate issued under the Act of 1882 as amended by the Act of 1884, granting them permission to return. The validity of the Act is assailed as being in effect an expulsion from the country of Chinese laborers in violation of existing treaties between the United States and the Government of China, and of rights vested in them under the laws of Congress.

It will serve to present with greater clearness the nature and force of the objections to the Act, if a brief statement be made of the general character of the treaties between the two countries and of the legislation of Congress to carry them into execution.

[590] The first treaty between the United States and the Empire of China was concluded on the 3d of July, 1844, and ratified in December of the following year. (8 Stat. at L. 592.) Previous to that time there had been an extensive commerce between the two nations, that to China being confined to a single port. It was not, however, attended by any serious disturbances between our people there and the Chinese. In August, 1842, as the result of a war between England and China, a treaty was concluded stipulating for peace and friendship between them, and, among other things, that British subjects, with their families and establishments, should be allowed to reside for the purpose of carrying on mercantile pursuits at the five principal ports of the empire. (Hertslet's Commercial Treaties, Vol. 6, 221.) Actuated by a desire to establish by treaty friendly relations between the United States and the Chinese Empire, and to secure to our people the same commercial privileges which had been thus conceded to British subjects, Congress placed at the disposal of the President the means to enable him to establish future commercial relations between the two countries "on terms of national equal reciprocity." (Act of March, 1843, chap. 90, 5 Stat. at L. 624.) A mission was accordingly sent by him to China, at the head of which was placed Mr. Caleb Cushing, a gentleman of large experience in public affairs. He found the Chinese Government ready to concede by treaty to the United States all that had been reluctantly yielded to England through compulsion. As the result of his negotiations the Treaty of 1844 was concluded. It stipulated, among other things, that there should be a "perfect, permanent, and universal peace, and a sincere and cordial amity" between the two nations; that the five principal ports of the empire should be opened to the citizens of the United States, who should be permitted to reside with their families and trade there, and to proceed with their vessels and merchandise to and from any foreign port and either of said five ports; and while peaceably attending to their affairs should receive the protection of the Chinese authorities. (Senate Document No. 138, 28th Cong. 2d Sess.)

The Treaty between England and China did [591] not have the effect of securing permanent peace and friendship between those countries. British subjects in China were often subjected not only to the violence of mobs, but to insults and outrages from local authorities of the country, which led to retaliatory measures for the punishment of the aggressors. To such an extent were these measures carried, and such resistance offered to them, that in 1856 the two countries were in open war. England then determined, with the co-operation of France, between which countries there seemed to be perfect accord, to secure from the Government of China, among other things, a recognition of the right of other powers to be represented there by accredited ministers, an extension of commercial intercourse with that country, and stipulations for religious freedom to all foreigners there, and for the suppression of piracy. England requested of the President the concurrence and active co-operation of the United States similar to that which France had accorded, and to authorize our naval and political authorities to act in concert with the allied forces. As this proposition involved a participation in existing hostilities, the request could not be acceded to, and the Secretary of State in his communication to the English Government explained that the war-making power of the United States was not vested in the President but in Congress, and that he had no authority, therefore, to order aggressive hostilities to be undertaken. But as the rights of citizens of the United States might be seriously affected by the results of existing hostilities, and commercial intercourse between the United States and China be disturbed, it was deemed advisable to send to China a minister plenipotentiary to represent our Government and watch our interests there. Accordingly, Mr. William B. Reed of Philadelphia was appointed such minister, and instructed, whilst abstaining from any direct interference, to aid by peaceful co-operation the objects the allied forces were seeking to accomplish. (Senate Document No. 47, 35th Cong. 1st Sess.) Through him a new treaty was negotiated with the Chinese Government. It was concluded in June, 1858, and ratified in August of the following year. (12 [592] Stat. at L. 1023.) It reiterated the pledges of peace and friendship between the two nations, renewed the promise of protection to all citizens of the United States in China peaceably attending to their affairs, and stipulated for security to Christians in the profession of their religion. Neither the Treaty of 1844 nor that that of 1858 touched upon the migration and emigration of the citizens and subjects of the two nations respectively from one country to

the other. But in 1868 a great change in the relations of the two nations was made in that respect. In that year a mission from China, composed of distinguished functionaries of that empire, came to the United States with the professed object of establishing closer relations between the two countries and their peoples. At its head was placed Mr. Anson Burlingame, an eminent citizen of the United States, who had at one time represented this country as commissioner to China. He resigned his office under our Government to accept the position tendered to him by the Chinese Government. The mission was hailed in the United States as the harbinger of a new era in the history of China—as the opening up to free intercourse with other nations and peoples a country that for ages had been isolated and closed against foreigners, who were allowed to have intercourse and to trade with the Chinese only at a few designated places; and the belief was general and confidently expressed, that great benefits would follow to the world generally and especially to the United States. On its arrival in Washington, additional articles to the Treaty of 1858 were agreed upon, which gave expression to the general desire that the two nations and their peoples should be drawn closer together. The new articles, eight in number, were agreed to on the 28th of July, 1868, and ratifications of them were exchanged at Pekin in November of the following year. (16 Stat. at L. 739.) Of these articles the 5th, 6th and 7th are as follows:

"ARTICLE 5. The United States of America and the Emperor of China cordially recognize the inherent and inalienable right of man to change his home and allegiance, and also the mutual advantage of the free migration and emigration of their citizens and subjects respectively from the one country to the other for purposes of curiosity, of trade, or as permanent residents. The high contracting parties, therefore, join in reprobating any other than an entirely voluntary emigration for these purposes. They consequently agree to pass laws making it a penal offense for a citizen of the United States or Chinese subjects to take Chinese subjects either to the United States or to any other foreign country, or for a Chinese subject or citizen of the United States to take citizens of the United States to China or to any other foreign country without their free and voluntary consent, respectively.

[593]

"ARTICLE 6. Citizens of the United States visiting or residing in China shall enjoy the same privileges, immunities or exemptions in respect to travel or residence as may there be enjoyed by the citizens or subjects of the most favored nation; and, reciprocally, Chinese subjects visiting or residing in the United States shall enjoy the same privileges, immunities, and exemptions in respect to travel or residence as may there be enjoyed by the citizens or subjects of the most favored nation. But nothing herein contained shall be held to confer naturalization upon citizens of the United States in China, nor upon the subjects of China in the United States.

"ARTICLE. 7. Citizens of the United States shall enjoy all the privileges of the public educational institutions under the control of the Government of China; and, reciprocally, Chinese subjects shall enjoy all the privileges of the public educational institutions under the control of the Government of the United States, which are enjoyed in the respective countries by the citizens or subjects of the most favored nation. The citizens of the United States may freely establish and maintain schools within the Empire of China at those places where foreigners are by treaty permitted to reside; and, reciprocally, Chinese subjects may enjoy the same privileges and immunities in the United States."

But notwithstanding these strong expressions of friendship and good will, and the desire they evince for free intercourse, events were transpiring on the Pacific Coast which soon dissipated the anticipations indulged as to the benefits to follow the immigration of Chinese to this country. The previous Treaties of 1844 and 1858 were confined principally to mutual declarations of peace and friendship and to stipulations for commercial intercourse at certain ports in China and for protection to our citizens whilst peaceably attending to their affairs. It was not until the additional articles of 1868 were adopted that any public declaration was made by the two nations that there were advantages in the free migration and emigration of their citizens and subjects respectively from one country to the other; and stipulations given that each should enjoy in the country of the other, with respect to travel or residence, the "privileges, immunities, and exemptions" enjoyed by citizens or subjects of the most favored nation. Whatever modifications have since been made to these general provisions have been caused by a well founded apprehension—from the experience of years—that a limitation to the immigration of certain classes from China was essential to the peace of the community on the Pacific Coast, and possibly to the preservation of our civilization there. A few words on this point may not be deemed inappropriate here, they being confined to matters of public notoriety, which have frequently been brought to the attention of Congress. Report of Committee of H. R. No. 872, 46th Cong. 2d Sess.

[594]

The discovery of gold in California in 1848, as is well known, was followed by a large immigration thither from all parts of the world, attracted not only by the hope of gain from the mines but from the great prices paid for all kinds of labor. The news of the discovery penetrated China, and laborers came from there in great numbers, a few with their own means, but by far the greater number under contract with employers, for whose benefit they worked. These laborers readily secured employment, and, as domestic servants, and in various kinds of out-door work, proved to be exceedingly useful. For some years little opposition was made to them except when they sought to work in the mines; but, as their numbers increased, they began to engage in various mechanical pursuits and trades, and thus came in competition with our artisans and mechanics, as well as our laborers in the field.

The competition steadily increased as the laborers came in crowds on each steamer that arrived from China, or Hong Kong, an adjacent

[595]

United States with any foreign nation can become the subject of judicial cognizance in the courts of this country, it is subject to such Acts as Congress may pass for its enforcement, modification or repeal." 112 U. S. 580, 599 [28: 798, 804]. This doctrine was affirmed and followed in *Whitney* v. *Robertson*, 124 U. S. 190, 195 [31: 386, 388]. It will not be presumed that the legislative department of the Government will lightly pass laws which are in conflict with the treaties of the country; but that circumstances may arise which would not only justify the Government in disregarding their stipulations, but demand in the interests [601] of the country that it should do so, there can be no question. Unexpected events may call for a change in the policy of the country. Neglect or violation of stipulations on the part of the other contracting party may require corresponding action on our part. When a reciprocal engagement is not carried out by one of the contracting parties, the other may also decline to keep the corresponding engagement. In 1798 the conduct towards this country of the Government of France was of such a character that Congress declared that the United States were freed and exonerated from the stipulations of previous treaties with that country. Its Act on the subject was as follows:

"*An Act to Declare the Treaties Heretofore Concluded with France No Longer Obligatory on the United States.*

"Whereas, the treaties concluded between the United States and France have been repeatedly violated on the part of the French Government; and the just claims of the United States for reparation of the injuries so committed have been refused, and their attempts to negotiate an amicable adjustment of all complaints between the two nations have been repelled with indignity; And whereas, under authority of the French Government, there is yet pursued against the United States a system of predatory violence, infracting the said treaties and hostile to the rights of a free and independent nation:

"*Be it enacted, by the Senate and House of Representatives of the United States of America in Congress assembled,* That the United States are of right freed and exonerated from the stipulations of the treaties and of the consular convention heretofore concluded between the United States and France; and that the same shall not henceforth be regarded as legally obligatory on the Government or citizens of the United States." (1 Stat. at L. 578.)

This Act, as seen, applied in terms only to the future. Of course, whatever of a permanent character had been executed or vested under the treaties was not affected by it. In that respect the abrogation of the obligations [602] of a treaty operates, like the repeal of a law, only upon the future, leaving transactions executed under it to stand unaffected. The validity of this legislative release from the stipulations of the treaties was of course not a matter for judicial cognizance. The question whether our Government is justified in disregarding its engagements with another nation is not one for the determination of the courts. This subject was fully considered by *Mr. Justice* Curtis, whilst sitting at the circuit, in *Taylor* v. *Morton*, 2 Curtis, 454, 459; and he held that whilst it would always be a matter of the utmost gravity and delicacy to refuse to execute a treaty, the power to do so was prerogative, of which no nation could be deprived without deeply affecting its independence; but whether a treaty with a foreign Sovereign had been violated by him, whether the consideration of a particular stipulation of a treaty had been voluntarily withdrawn by one party so as to no longer be obligatory upon the other, and whether the views and acts of a foreign Sovereign, manifested through his representative, had given just occasion to the political departments of our Government to withhold the execution of a promise contained in a treaty, or to act in direct contravention of such promise, were not judicial questions; that the power to determine them has not been confided to the judiciary, which has no suitable means to execute it, but to the executive and legislative departments of the Government; and that it belongs to diplomacy and legislation, and not to the administration of existing laws. And the learned Justice added, as a necessary consequence of these conclusions, that if Congress has this power, it is wholly immaterial to inquire whether it has, by the statute complained of, departed from the treaty or not; or, if it has, whether such departure was accidental or designed; and if the latter, whether the reasons therefor were good or bad. These views were reasserted and fully adopted by this court in *Whitney* v. *Robertson*, 124 U. S. 190, 195 [31: 386, 388]. And we may add to the concluding observation of the learned Justice, that if the power mentioned is vested in Congress, any reflection upon its motives, or the motives of any of its members in exercising it, would be entirely uncalled for. This court is not a censor of the morals of other departments of [603] the Government; it is not invested with any authority to pass judgment upon the motives of their conduct. When once it is established that Congress possesses the power to pass an Act, our province ends with its construction and its application to cases as they are presented for determination. Congress has the power under the Constitution to declare war, and in two instances where the power has been exercised—in the war of 1812 against Great Britain, and in 1846 against Mexico—the propriety and wisdom and justice of its action were vehemently assailed by some of the ablest and best men in the country, but no one doubted the legality of the proceeding; and any imputation by this or any other court of the United States upon the motives of the members of Congress who in either case voted for the declaration, would have been justly the cause of animadversion. We do not mean to intimate that the moral aspects of legislative Acts may not be proper subjects of consideration. Undoubtedly they may be, at proper times and places, before the public, in the halls of Congress, and in all the modes by which the public mind can be influenced. Public opinion, thus enlightened, brought to bear upon legislation, will do more than all other causes to prevent abuses; but the province of the courts is to pass upon the validity of laws, not to make them, and when their validity is established, to declare their meaning and apply

their provisions. All else lies beyond their domain.

There being nothing in the Treaties between China and the United States to impair the validity of the Act of Congress of October 1, 1888, was it on any other ground beyond the competency of Congress to pass it? If so, it must be because it was not within the power of Congress to prohibit Chinese laborers who had at the time departed from the United States, or should subsequently depart, from returning to the United States. Those laborers are not citizens of the United States; they are aliens. That the Government of the United States, through the action of the legislative department, can exclude aliens from its territory is a proposition which we do not think open to controversy. Jurisdiction over its own territory to that extent is an incident of every independent nation. It is a part of its independence. [604] If it could not exclude aliens it would be to that extent subject to the control of another power. As said by this court in the case of *The Exchange* v. *McFaddon*, 11 U. S. 7 Cranch, 116, 136 [3: 287], speaking by *Chief Justice* Marshall: "The jurisdiction of the nation within its own territory is necessarily exclusive and absolute. It is susceptible of no limitation not imposed by itself. Any restriction upon it, deriving validity from an external source, would imply a diminution of its sovereignty to the extent of the restriction, and an investment of that sovereignty to the same extent in that power which could impose such restriction. All exceptions, therefore, to the full and complete power of a nation within its own territories must be traced up to the consent of the nation itself. They can flow from no other legitimate source."

While under our Constitution and form of government the great mass of local matters is controlled by local authorities, the United States, in their relation to foreign countries and their subjects or citizens are one nation, invested with powers which belong to independent nations, the exercise of which can be invoked for the maintenance of its absolute independence and security throughout its entire territory. The powers to declare war, make treaties, suppress insurrection, repel invasion, regulate foreign commerce, secure republican governments to the States, and admit subjects of other nations to citizenship, are all sovereign powers, restricted in their exercise only by the Constitution itself and considerations of public policy and justice which control, more or less, the conduct of all civilized nations. As said by this court, in the case of *Cohens* v. *Virginia*, 19 U. S. 6 Wheat. 264, 413 [5: 257], speaking by the same great Chief Justice: "That the United States form, for many, and for most important purposes, a single nation, has not yet been denied. In war, we are one people. In making peace, we are one people. In all commercial regulations, we are one and the same people. In many other respects, the American people are one; and the Government which is alone capable of controlling and managing their interests in all these respects, is the government of the Union. It is their Government, and in that character they have no other. [605] America has chosen to be in many respects, and to many purposes, a nation; and for all these purposes her government is complete; to all these objects, it is competent. The people have declared that in the exercise of all powers given for these objects it is supreme. It can, then, in effecting these objects, legitimately control all individuals or governments within the American territory. The Constitution and laws of a State, so far as they are repugnant to the Constitution and laws of the United States, are absolutely void. These States are constituent parts of the United States. They are members of one great empire—for some purposes sovereign, for some purposes subordinate." The same view is expressed in a different form by *Mr. Justice* Bradley, in *Knox* v. *Lee*, 79 U. S. 12 Wall. 457, 555 [20: 287, 313], where he observes that "The United States is not only a Government, but it is a national Government, and the only Government in this country that has the character of nationality. It is invested with power over all the foreign relations of the country, war, peace and negotiations and intercourse with other nations; all which are forbidden to the state governments. It has jurisdiction over all those general subjects of legislation and sovereignty which affect the interests of the whole people equally and alike, and which require uniformity of regulations and laws, such as the coinage, weights and measures, bankruptcy, the postal system, patent and copyright laws, the public lands, and interstate commerce; all which subjects are expressly or impliedly prohibited to the state governments. It has power to suppress insurrections, as well as to repel invasions, and to organize, arm, discipline and call into service the militia of the whole country. The President is charged with the duty and invested with the power to take care that the laws be faithfully executed. The judiciary has jurisdiction to decide controversies between the States, and between their respective citizens, as well as questions of national concern; and the Government is clothed with power to guarantee to every State a republican form of government, and to protect each of them against invasion and domestic violence."

The control of local matters being left to local authorities, and national matters being intrusted to the Government of the Union, the [606] problem of free institutions existing over a widely extended country, having different climates and varied interests, has been happily solved. For local interests the several States of the Union exist, but for national purposes, embracing our relations with foreign nations, we are but one people, one nation, one power.

To preserve its independence, and give security against foreign aggression and encroachment, is the highest duty of every nation, and to attain these ends nearly all other considerations are to be subordinated. It matters not in what form such aggression and encroachment come, whether from the foreign nation acting in its national character or from vast hordes of its people crowding in upon us. The Government, possessing the powers which are to be exercised for protection and security, is clothed with authority to determine the occasion on which the powers shall be called forth; and its determination, so far as the subjects affected are concerned, are necessarily

conclusive upon all its departments and officers. If, therefore, the Government of the United States, through its legislative department, considers the presence of foreigners of a different race in this country, who will not assimilate with us, to be dangerous to its peace and security, their exclusion is not to be stayed because at the time there are no actual hostilities with the nation of which the foreigners are subjects. The existence of war would render the necessity of the proceeding only more obvious and pressing. The same necessity, in a less pressing degree, may arise when war does not exist, and the same authority which adjudges the necessity in one case must also determine it in the other. In both cases its determination is conclusive upon the judiciary. If the Government of the country of which the foreigners excluded are subjects is dissatisfied with this action, it can make complaint to the executive head of our Government, or resort to any other measure which, in its judgment, its interests or dignity may demand; and there lies its only remedy.

The power of the Government to exclude foreigners from the country whenever, in its judgment, the public interests require such exclusion, has been asserted in repeated instances, [607] and never denied by the executive or legislative departments. In a communication made in December, 1852, to Mr. A. Dudley Mann, at one time a special agent of the Department of State in Europe, Mr. Everett, then Secretary of State under President Fillmore, writes: "This Government could never give up the right of excluding foreigners whose presence it might deem a source of danger to the United States." "Nor will this Government consider such exclusion of American citizens from Russia necessarily a matter of diplomatic complaint to that country." In a dispatch to Mr. Fay, our minister to Switzerland, in March, 1856, Mr. Marcy, Secretary of State, under President Pierce, writes: "Every society possesses the undoubted right to determine who shall compose its members, and it is exercised by all nations, both in peace and war." "It may always be questionable whether a resort to this power is warranted by the circumstances, or what department of the Government is empowered to exert it; but there can be no doubt that it is possessed by all nations, and that each may decide for itself when the occasion arises demanding its exercise." In a communication in September, 1869, to Mr. Washburne, our minister to France, Mr. Fish, Secretary of State under President Grant, uses this language: "The control of the people within its limits, and the right to expel from its territory persons who are dangerous to the peace of the State, are too clearly within the essential attributes of sovereignty to be seriously contested. Strangers visiting or sojourning in a foreign country voluntarily submit themselves to its laws and customs; and the municipal laws of France, authorizing the expulsion of strangers, are not of such recent date, nor has the exercise of the power by the Government of France been so infrequent, that sojourners within her territory can claim surprise when the power is put in force." In a communication to Mr. Foster, our minister to Mexico, in July, 1879, Mr. Evarts, Secretary of State under President Hayes, referring to the power vested in the Constitution of Mexico to expel objectionable foreigners, says: "The admission that, as that Constitution now stands and is interpreted, foreigners who render themselves harmful or objectionable to the General Government must expect to be liable [608] to the exercise of the power adverted to, even in time of peace, remains, and no good reason is seen for departing from that conclusion now. But, while there may be no expedient basis on which to found objection, on principle and in advance of a special case thereunder, to the constitutional right thus asserted by Mexico, yet the manner of carrying out such asserted right may be highly objectionable. You would be fully justified in making earnest remonstrances should a citizen of the United States be expelled from Mexican territory without just steps to assure the grounds of such expulsion, and in bringing the fact to the immediate knowledge of the Department." In a communication to Mr. W. J. Stillman, under date of August 8, 1882, Mr. Frelinghuysen, Secretary of State under President Arthur, writes: "This Government cannot contest the right of foreign Governments to exclude, on police, or other grounds, American citizens from their shores." (Wharton's Int. Law Dig. § 206.)

The exclusion of paupers, criminals and persons afflicted with incurable diseases, for which statutes have been passed, is only an application of the same power to particular classes of persons whose presence is deemed injurious or a source of danger to the country. As applied to them, there has never been any question as to the power to exclude them. The power is constantly exercised; its existence is involved in the right of self-preservation. As to paupers, it makes no difference by whose aid they are brought to the country. As Mr. Fish, when Secretary of State, wrote in a communication under date of December 26, 1872, to Mr. James Moulding, of Liverpool, the Government of the United States "is not willing and will not consent to receive the pauper class of any community who may be sent or may be assisted in their immigration at the expense of Government or of municipal authorities." As to criminals, the power of exclusion has always been exercised, even in the absence of any statute on the subject. In a dispatch to Mr. Cramer, our minister to Switzerland, in December, 1881, Mr. Blaine, Secretary of State under President Arthur, writes: "While, under the Constitution and the laws, this coun- [609] try is open to the honest and the industrious immigrant, it has no room outside of its prisons or almshouses for depraved and incorrigible criminals or hopelessly dependent paupers who may have become a pest or burden, or both, to their own country." (Wharton's Int. Law Dig. *supra*.)

The power of exclusion of foreigners being an incident of sovereignty belonging to the Government of the United States, as a part of those sovereign powers delegated by the Constitution, the right to its exercise at any time when, in the judgment of the Government, the interests of the country require it, cannot be granted away or restrained on behalf of anyone. The powers of Government are delegated in trust to the United States, and are incapable of transfer to any other parties. They cannot

be abandoned or surrendered. Nor can their exercise be hampered, when needed for the public good, by any considerations of private interest. The exercise of these public trusts is not the subject of barter or contract. Whatever license, therefore, Chinese laborers may have obtained previous to the Act of October 1, 1888, to return to the United States after their departure, is held at the will of the Government, revocable at any time, at its pleasure. Whether a proper consideration by our Government of its previous laws, or a proper respect for the nation whose subjects are affected by its action, ought to have qualified its inhibition and made it applicable only to persons departing from the country after the passage of the Act, are not questions for judicial determination. If there be any just ground of complaint on the part of China, it must be made to the political department of our Government, which is alone competent to act upon the subject. The rights and interests created by a treaty, which have become so vested that its expiration or abrogation will not destroy or impair them, are such as are connected with and lie in property capable of sale and transfer, or other disposition, not such as are personal and untransferable in their character. Thus, in *The Head-Money Cases*, the court speaks of certain rights being in some instances conferred upon the citizens or subjects of one nation residing in the territorial limits of the other, which are "capable of enforcement as [610] between private parties in the courts of the country." "An illustration of this character," it adds, "is found in treaties which regulate the mutual rights of citizens and subjects of the contracting nations in regard to rights of property by descent or inheritance when the individuals concerned are aliens." 112 U. S. 580, 598 [28: 798, 803]. The passage cited by counsel from the language of *Mr. Justice* Washington in *Society for the Propogation of the Gospel* v. *New Haven*, 21 U. S. 8 Wheat. 464, 493 [5: 662], also illustrates this doctrine. There the learned Justice observes that "If real estate be purchased or secured under a treaty, it would be most mischievous to admit that the extinguishment of the treaty extinguished the right to such estate. In truth, it no more affects such rights than the repeal of a municipal law affects rights acquired under it." Of this doctrine there can be no question in this court; but far different is this case, where a continued suspension of the exercise of a governmental power is insisted upon as a right, because, by the favor and consent of the Government, it has not heretofore been exerted with respect to the appellant or to the class to which he belongs. Between property rights not affected by the termination or abrogation of a treaty and expectations of benefits from the continuance of existing legislation there is as wide a difference as between realization and hopes.

During the argument reference was made by counsel to the Alien Law of June 25, 1798, and to opinions expressed at the time by men of great ability and learning against its constitutionality. (1 Stat. at L. 570, chap. 58.) We do not attach importance to those opinions in their bearing upon this case. The Act vested in the President power to order all such aliens as he should judge dangerous to the peace and safety of the United States, or should have reasonable grounds to suspect were concerned in any treasonable or secret machination against the Government, to depart out of the territory of the United States within such time as should be expressed in his order. There were other provisions also distinguishing it from the Act under consideration. The Act was passed during a period of great political excitement, and it was attacked and defended with great zeal [611] and ability. It is enough, however, to say that it is entirely different from the Act before us, and the validity of its provisions was never brought to the test of judicial decision in the courts of the United States.

Order affirmed.

SARAH M. JONES, *Appt.*, [684]
v.
MATILDA A. VAN DOREN ET AL.

(See S. C. Reporter's ed. 684-693.)

Amendment to pleading—trustee, who is—grantee, when is trustee—equity jurisdiction—dower interest obtained by fraud—prayer for general relief, effect of—Statute of Limitations as to fraud.

1. If the amendment to the pleadings is one which the court, in the exercise of its discretion, might properly allow, a motion to strike the amended pleading from the files should be denied.

2. One who by fraudulent misrepresentations obtains a conveyance from the owner of any interest in property, real or personal, is in equity a trustee *ex maleficio* for the person defrauded; and anyone taking the property from such trustee with notice of the fraud and of the consequent trust is affected by the trust.

3. When a trustee, dealing with the trust property together with property of his own, as one mass, conveys part of the whole to a purchaser who takes it for value, in good faith, without notice of the fraud or of the trust, and who therefore acquires a good title, the question how far the rest of the property shall be charged with the trust so as fully to indemnify the person defrauded, can only be determined in a court of equity.

4. Where one defendant obtained a conveyance of the plaintiff's dower interest by fraud, and held that interest in trust for her, a codefendant, taking the property with full notice, is equally affected by the fraud and bound by the trust.

5. Where the prayer of the bill is chiefly directed towards securing a right to redeem the whole property by paying off the whole mortgage, but the general object of the bill is to secure to the plaintiff the dower interest of which she has been defrauded, and the bill contains a prayer for general relief, this is sufficient to enable a court of equity to decree such relief as the facts stated in the bill justify.

6. Where the plaintiff is not suing for her dower as such, the right to which accrued over twenty years before commencing the suit, but for property of which she has been defrauded, the Statute of Limitations begins to run only from the discovery of the fraud.

[No. 202.]

Argued March 14, 1889. Decided May 13, 1889.

APPEAL from a decree of the Circuit Court of the United States for the District of Minnesota, dismissing, on demurrer, a suit to redeem a mortgage and for a reconveyance of land, in order to obtain plaintiff's dower interest therein. *Reversed.*

See *S. C.* below, 18 Fed Rep. 619.

[685] Statement by *Mr. Justice* **Gray:**

This was a bill in equity filed May 18, 1883, by Sarah M. Jones, a citizen of Pennsylvania, against Matilda A. Van Doren, a citizen of Indiana, and Samuel J. Jones and Samuel J. Glover, citizens of Illinois.

The original bill alleged that Robert H. Jones died intestate in April, 1863, leaving the plaintiff, his widow, and the defendant, Jones, his son and only heir at law, and seised in fee of one fourth undivided part of certain land described, in Minnesota; that the plaintiff became entitled to a dower interest therein, which by the laws of Minnesota was a life estate in one third part, and the son became vested with the title in fee, subject to her dower interest; that she, being informed that the estate was involved in litigation and having little or no knowledge of business, and at his request, for no consideration, and merely for the purpose of facilitating the conduct of the litigation, made a quitclaim deed of her interest to him, and that he accepted the deed upon the express understanding and agreement to receive it for that purpose only.

The bill further set forth, as the result of the litigation, that certain described parcels of the land were set off to him in severalty; and alleged that he, conspiring and confederating with the defendant Matilda A. Van Doren (who was fully advised of all the facts above alleged) to defraud the plaintiff of her dower estate, made a mortgage by a conveyance in trust to the defendant Glover, on July 25, 1871, of all the land so set off, including the plaintiff's interest therein, to secure a sum of $10,000 lent to him by Mrs. Van Doren; that, as part of the conspiracy, a suit for foreclosure was begun in the name of Glover on August 26, 1876, and a decree obtained therein, under which all the land was sold, and (except a small portion purchased by one Galusha) bought by Mrs. Van Doren for the sum of $8,745.14, and a final de-
[686] cree, vesting title in the purchasers, was entered on May 22, 1880; that the plaintiff was ignorant of the mortgage and of the foreclosure suit until long after the final decree therein; that on December 16, 1876, in order to protect her dower right, she paid $1,808.48 in discharge of taxes on the land, of which payment the defendants availed themselves; and that Mrs. Van Doren, in 1881, sold a portion of the land to one Marshall, a *bona fide* purchaser, for the sum of $10,000, which she received and applied to her own use, and still held the rest of the land.

The plaintiff further alleged that before filing her bill she demanded an account of Mrs. Van Doren, and offered to pay her all moneys paid or expended by her on or about the land, with interest, in redemption of the mortgage, and demanded a reconveyance, but she refused; and that the plaintiff was ready and willing to pay to her all sums of money, and to do all other acts that might be adjudged by the court necessary to redeem the land from the mortgage and foreclosure.

The bill prayed for an account, and that the plaintiff, on paying to Mrs. Van Doren such sums as the court might direct to enable her to redeem the mortgage, should be adjudged to be entitled to redemption, and Mrs. Van Doren might be ordered to reconvey the land still held by her, and for such other or different relief as the nature of the case might require and as might be agreeable to equity.

A demurrer to that bill was sustained and the bill dismissed, on the ground that the plaintiff, having conveyed her interest by a deed absolute on its face, the Statute of Frauds would not permit her to set up an oral trust, and, as no fraud, accident or mistake in making that deed was alleged, no trust arose by implication of law. 18 Fed. Rep. 619.

The bill was then amended by substituting, for the allegations concerning the plaintiff's conveyance to the defendant Jones, allegations that he, with intent to defraud her, prepared an instrument which he represented to be a power of attorney to enable him to act for the plaintiff in regard to certain anticipated litigation and other business, and thereby induced her to sign it; that the instrument was in fact, as he knew, a quitclaim deed of all her right of dower; that she did not read the instrument, [687]
or know its true character or effect, but relied on his representations, and, had she read it, was then so ignorant of business that she would not have understood its legal purport; and that she always, until within six months before the filing of this bill, believed that the instrument was a mere power of attorney.

The defendant Van Doren demurred to the amended bill, and afterwards moved to have it stricken from the files, for the reason that it stated a new and different cause of action, the original bill being based upon an express trust, and the amended bill upon a resulting trust arising by implication of law. The court overruled the motion, but sustained the demurrer, on the ground that the plaintiff was not entitled to the specific relief prayed for, as shown by its opinion sent up with the record and printed in the margin.* A final decree was entered dismissing the bill, and the plain- [688]
tiff appealed to this court.

Mr. **Charles E. Flandrau,** for appellant

A dowress may redeem from a mortgage even when she has joined in the mortgage, for the release of her dower.

Jones, Mortg. § 1067; *Eaton* v. *Simonds*, 14 Pick. 98.

She cannot redeem from a part, she must redeem from the whole mortgage.

Collins v. *Riggs*, 81 U. S. 14 Wall. 491 (20: 723); *Bradley* v. *Snyder*, 14 Ill. 263; *Benedict* v. *Gilman*, 4 Paige, 58; *Johnson* v. *Harmon*, 19 Ia. 56; *Knowles* v. *Rablin*, 20 Ia. 101; *Gage* v. *Brewster*, 31 N. Y. 218; *Martin* v. *Fridley*, 23 Minn. 18.

The bill alleges ignorance of all the facts

---

*NELSON, *J.* The demurrer is sustained, for the reasons:

1st. If the allegations of the bill of complaint are true, the right of the complainant to bring her action to recover dower exists, unless the Statute of Limitations of the State of Minnesota has barred such recovery. Of course, if she has lost all right of action by laches, the bill must fail, for the relief claimed is based upon an interest in the property as dowress.

2d. If not barred by the statute of her action to recover dower, the fraud alleged, which creates an impediment to a recovery at law, can be removed by a suit in equity and her dower obtained. Equity furnishes the most adequate and complete remedy, and dower is highly favored in that forum.

3d. The complainant is not entitled by the fraud

constituting the fraud in this case up to within six months prior to the filing of the bill, and these allegations alone take the case out of the statute.

Cock v. *Van Etten*, 12 Minn. 522; *Muus* v. *Muus*, 29 Minn. 118; *Humphrey* v. *Carpenter*, 39 N. W. Rep. 67; *County Comrs. Mower Co.* v. *Smith*, 22 Minn. 97; *South Covington & C. St. R. Co.* v. *Gest*, 36 Fed. Rep. 307.

Messrs. C. K. Davis and **J. M. Gilman**, for respondent, Matilda A. Van Doren:

A party cannot, under the privilege of amending, introduce matter which would constitute a new bill.

Snead v. *M'Coull*, 58 U. S. 12 How. 407 (13:1043); *Shields* v. *Barrow*, 58 U. S. 17 How. 130 (15:158); *Pratt* v. *Bacon*, 10 Pick. 123; *Platt* v. *Squire*, 5 Cush. 551; *Verplanck* v. *Mercantile Ins. Co.* 1 Edw. Ch. 46; *Crabb* v. *Thomas*, 25 Ala. 212; *Carey* v. *Smith*, 11 Ga. 539; *Goodyear* v. *Bourn*, 3 Blatchf. 266.

If she has a dower interest in the property, she can proceed and recover it, irrespective of the mortgage or foreclosure. She was not a party to the mortgage and need not redeem, in order to recover her dower interest.

Messiter v. *Wright*, 16 Pick. 151; *Davis* v. *Wetherell*, 13 Allen, 60; *Whitcomb* v. *Sutherland*, 18 Ill. 578; *Opdyke* v. *Bartles*, 11 N. J. Eq. 133; 2 Scribner, Dower, 151, 152, 1st ed.; 2 Jones, Mortg. § 1067.

When a husband makes a deed to defraud his creditors, and without consideration, and his wife joins in the deed, she may still have dower in the premises as against the grantee and all persons claiming under him with notice.

Woodworth v. *Paige*, 5 Ohio St. 70.

The dower right is superior to the mortgage. The complainant, therefore, would not have been a proper party in the suit to foreclose the mortgage; and had she been made a party, the decree would not have barred or in any way affected her right of dower.

Lewis v. *Smith*, 9 N. Y. 502; *Merchants Bank* v. *Thomson*, 55 N. Y. 7; *Porter* v. *Lazear*, 109 U. S. 84 (27:865); *Burns* v. *Lynde*, 6 Allen, 305.

Her right to dower became barred in twenty years.

Durham v. *Angier*, 20 Maine, 242; *Jones* v. *Powell*, 6 Johns. Ch. 194; *Allen* v. *Allen*, 2 Pen. & W. 311; *Conover* v. *Wright*, 2 Halst. Ch. (N. J.) 613; *Tuttle* v. *Willson*, 10 Ohio, 24; *Kingsolving* v. *Pierce*, 18 B. Mon. 782; *Torrey* v. *Minor*, 1 Sm. & M. Ch. 489; *Caston* v. *Caston*, 2 Rich. Eq. (S. C.) 1; 2 Scribner, Dower, 532, 541, 1st ed.; *Ralls* v. *Hughes*, 1 Dana (Ky.) 407.

The right to redeem is barred in ten years.

King v. *Meighen*, 20 Minn. 264; *Parsons* v. *Noggle*, 23 Minn. 328.

Mr. Justice **Gray** delivered the opinion of the court: [690]

The only difference between the original and amended bills is that the first alleges that the defendant, Jones, took the conveyance of the plaintiff's right of dower upon an express trust for her, whereas the second alleges that he procured the conveyance from her by fraudulent misrepresentations as to the nature of the instrument, creating a trust by operation of law in her favor. The other facts alleged in the [691] two bills are substantially identical. Each bill proceeds upon the ground that the defendant Jones was a trustee for the plaintiff, and that the defendant Van Doren, taking the land from him with notice of all the facts, was affected by the trust; and the object of both bills is the same, to obtain the right of dower of which the plaintiff has been deprived by the acts of the defendants, and to which she was entitled under the laws of Minnesota in force at the time of her husband's death. Pub. Stat. 1849–1858, chap. 36, § 1.

The amendment was therefore one which the court in the exercise of its discretion might properly allow, and the motion to strike the amended bill from the files was rightly denied. *Hardin* v. *Boyd*, 113 U. S. 756 [28:1141].

But we are of opinion that the court erred in sustaining the demurrer to the amended bill.

One who by fraudulent misrepresentations obtains a conveyance from the owner of any interest in property, real or personal, is in equity a trustee *ex maleficio* for the person defrauded; and anyone taking the property from such trustee with notice of the fraud and of the consequent trust is affected by the trust. *Tyler* v. *Black*, 54 U. S. 13 How. 230 [14:124]; *National Bank* v. *Insurance Co.* 104 U. S. 54 [26:693]; *Moore* v. *Crawford*, 130 U. S. 122 [*ante*, 878]. When a trustee, dealing with the trust property together with property of his own, as one mass, conveys part of the whole to a purchaser who takes it for value, in good faith, without notice of the fraud or of the trust, and who therefore acquires a good title, the question how far the rest of the property shall be charged with the trust, so as fully to indemnify the person defrauded, can only be determined in a court of equity.

In the present case, upon the facts alleged in the amended bill, and admitted by the demurrer, the defendant Jones obtained a conveyance of the plaintiff's dower interest by fraud, and held that interest in trust for her. The defendant Van Doren, taking the property with full notice, was equally affected by the fraud and bound by the trust. Parts of the property, having been conveyed to *bona fide* [692] purchasers, were beyond the reach of the plain-

alleged, if true, to anything more than dower; she is not entitled to the whole property. If, by a fraud perpetrated upon her, which the defendants were cognizant of and participated in, as alleged, she has been prevented from asserting her right to dower by a suit at law, she is not thereby deprived of all remedy to recover it. The relief prayed for in this bill as amended does not necessarily follow from the facts alleged therein and admitted by the demurrer. The demurrer goes to the relief prayed; and, not being entitled to the relief, the bill must fail.

In the original bill, the relief claimed was based upon the admitted allegation that the quitclaim deed was voluntarily given, and accompanying it was a parol trust for the benefit of the grantor, known to the defendants at the time the property was mortgaged. This bill was held bad on demurrer, for the reason that such a trust as alleged could not be created and recognized, it being in violation of the laws governing uses and trusts, which were specially defined by the statutes of Minnesota. The amendments have changed the features of the bill, and it is doubtful whether they are proper; but I have overruled a motion to strike them from the files, and decided the demurrer upon the bill as amended.

Demurrer sustained.

tiff. Full, adequate and complete relief, either by awarding to the plaintiff her dower in the whole out of the part not so conveyed, or by awarding her dower in that part only, with damages for having been fraudulently deprived of her interest in the rest, could not be had in an action at law. The case made in the bill, therefore, by reason of the fraud, the trust, and the peculiar relief which the conduct of the defendants has made necessary to be given in order fully to indemnify the plaintiff, is clearly within the jurisdiction of a court of equity. *Herbert* v. *Wren*, 11 U. S. 7 Cranch, 370 [3: 374].

The learned Judge of the circuit court, in his opinion sustaining the demurrer to the amended bill, recognized that "The fraud alleged, which creates an impediment to a recovery at law, can be removed by a suit in equity and her dower obtained," and that "Equity furnishes the most adequate and complete remedy, and dower is highly favored in that forum." The ground on which he declined to support the amended bill was that the plaintiff was not entitled to the specific relief prayed for.

It is true that the prayer of the bill, being apparently drawn upon the supposition that the plaintiff might be held bound by the mortgage, is chiefly directed towards securing a right to redeem. In that aspect of the case, she properly offered to redeem the whole property, by paying off the whole mortgage, because she could not, unless at the election of the mortgagee, redeem by paying less. *Collins* v. *Riggs*, 81 U. S. 14 Wall. 491 [20: 723]; *McCabe* v. *Bellows*, 7 Gray, 148. But the general object of the bill is to secure to the plaintiff the dower interest of which she has been defrauded, and the bill contains a prayer for general relief. This is sufficient to enable a court of equity to decree such relief as the facts stated in the bill justify. *English* v. *Foxall*, 27 U. S. 2 Pet. 595 [7: 531]; *Taylor* v. *Merchants Ins. Co.* 50 U. S. 9 How. 390 [13: 187]; *Texas* v. *Hardenberg*, 77 U. S. 10 Wall. 68 [19: 839].

What has been said furnishes an answer also to the argument that the plaintiff's right, if any, is barred by the Statute of Limitations. The plaintiff is not suing for her dower as such, the right to which accrued in 1868, but for property of which she has been defrauded, and [693] in such a case the Statute of Limitations begins to run only from the discovery of the fraud. *Moore* v. *Greene*, 60 U. S. 19 How. 69 [15: 533]; *Meader* v. *Norton*, 78 U. S. 11 Wall. 442 [20: 184]; *Cock* v. *Van Etten*, 12 Minn. 522; Minnesota Gen. Stat. 1878, chap. 66, § 6, cl. 6.

Decree reversed, and case remanded, with directions to overrule the demurrer to the amended bill, and to take such further proceedings as may be consistent with this opinion.

---

[693] THE MICHIGAN INSURANCE BANK,
Plff. in Err.,
v.
ANSON ELDRED.

(See S. C. Reporter's ed. 693-699.)

State Statutes of Limitation—period of computation—commencement of action—delivery of writ to officer

1. Statutes of Limitations of the State govern personal actions in the courts of the United States.
2. Under section 27 of chapter 138 of the Wisconsin Revised Statutes of 1858, the service of the summons, or its delivery to an officer with intent that it shall be served, is the act by which the period of limitation must be computed.
3. Depositing a process in a place provided or designated by the officer is equivalent to a manual delivery to him.
4. The questions, whether the box in the clerk's office had been duly designated by the marshal as a place where processes to be served by him should be deposited, and whether the summons was either deposited by the clerk in that box, or delivered by him to the marshal, within ten years after May 13, 1862, when the cause of action accrued, were not questions of law for the court, but questions of fact, which should have been submitted to the jury.

[No. 239.]

Argued April 5, 8, 1889. Decided May 13, 1889.

IN ERROR to the Circuit Court of the United States for the Eastern District of Wisconsin, to review a judgment for the defendant in an action upon a judgment, the defense being the Statute of Limitations. *Reversed.*

Statement by *Mr. Justice* **Gray:**

This was an action by a Michigan corporation against a citizen of Wisconsin upon a judgment recovered by the plaintiff against the defendant on May 13, 1862, in the Circuit Court for the County of Wayne and State of Michigan, for the sum of $4,211.56, which the plaintiff now sued for, with interest. The defendant answered that the cause of action did not accrue within ten years.

At the trial, the plaintiff offered in evidence the *præcipe*, dated May 11, 1872, signed by its attorney, and directing the clerk to issue a [694] summons in this case, returnable according to law; and the summons issued by the clerk, bearing the same date, and returnable on the first Monday (which was the third day) of June, 1872; with the return of the marshal thereon, stating that he had served it on June 3, 1872.

The plaintiff's attorney testified that he prepared the *præcipe* on the day it bore date, and, when he had filled it up, filed it with the clerk, and then went immediately to the marshal's office, which was one story above the clerk's office in the same building, and told the marshal that there was in the clerk's office a summons in this case for service.

The clerk, who had been in office for more than five years before that day, being called as a witness, and asked as to the practice or habit of the marshal in respect to calling at the clerk's office for process, and as to the usual practice in the clerk's office as to making out and delivering a summons, testified as follows: "The marshal usually stopped at our office, on his way up and down stairs, and got such writs as were waiting for him. We had a box in which we usually placed them, so that he could stop in, open the door, and get them and take them up. The box stood on a bookcase near the door. That had been the custom for years; ever since I had been in the office." "Sometimes attorneys would wait until the process was issued, and take it and deliver it to the marshal; sometimes we would put it in his box, and the marshal would get it there." "I presume the summons must have been made out by me on May 11, 1872; I know of nothing to the contrary. The mark of filing on the *præcipe* for a summons is in my handwriting; it

was filed May 11, 1872. I have no special recollection about that particular summons." "Our practice was to put writs in that box for the marshal. It was our practice to put them there the day when the writ was issued."

On cross examination, he testified that he sometimes delivered processes to the attorney in the case to take to the marshal, and sometimes, if the marshal did not come down immediately, would take them up to him.

On re-examination, he testified that the custom was to issue the summons on the same day the *præcipe* was filed, and that he had no recollection of ever having neglected to do so. [695]

The plaintiff requested the court to instruct the jury that "the delivery of the process to the marshal for serving may be inferred from the practice and course of business as to delivery of the summons by the clerk, or the practice of the marshal to receive the same in the office of the clerk."

The court declined to give this instruction, and directed a verdict for the defendant, which was returned. The plaintiff duly tendered a bill of exceptions and sued out this writ of error.

Messrs. Finches, Lynde & Miller and **George P. Miller**, for plaintiff in error:

A suit at common law is commenced by the issuance of the writ.

Lowry v. *Lawrence*, 1 Caines, 69; *Cheetham* v. *Lewis*, 3 Johns. 43; *Fowler* v. *Sharp*, 15 Johns. 323; *Burdick* v. *Green*, 18 Johns. 14; *Jackson* v. *Brooks*, 14 Wend. 649, 654; *Ford* v. *Phillips*, 1 Pick. 202; *Gardner* v. *Webber*, 17 Pick. 407, 412; *Bunker* v. *Shed*, 8 Met. 150, 153; *Day* v. *Lamb*, 7 Vt. 426; *Mason* v. *Cheney*, 47 N. H. 24; *Hail* v. *Spencer*, 1 R. I. 17; *Johnson* v. *Farwell*, 7 Greenl. 370; *Ross* v. *Luther*, 4 Cow. 158; *Parker* v. *Colcord*, 2 N. H. 36; *Society for Propagating the Gospel* v. *Whitcomb*, 2 N. H. 227; *Seaver* v. *Lincoln*, 21 Pick. 267; *Whitaker* v. *Turnbull*, 18 N. J. L. 172; *Feazle* v. *Simpson*, 2 Ill. 30; *Schroeder* v. *Merchants & M. Ins. Co.* 104 Ill. 71; *Cox* v. *Cooper*, 3 Ala. 256; *International Bank* v. *Jenkins*, 107 Ill. 291.

The date of the writ is *prima facie* evidence of when the writ was issued, but the defendant may show by proof the real date.

Henderson v. *Baker*, 2 Burr. 950.

A writ is sued out and issued when it is filled up and completed with intention to have it served.

Allen v. *Mann*, 1 D. Chip. 94; *Day* v. *Lamb*, 7 Vt. 426; *Hail* v. *Spencer*, 1 R. I. 17; *Cross* v. *Barber*, 21 Chicago Legal News, 77; 38 Alb. L. J. 271; *Bunker* v. *Shed*, 8 Met. 150, 153; *Gardner* v. *Webber*, 17 Pick. 407; *Seaver* v. *Lincoln*, 21 Pick. 267, 269; *Badger* v. *Phinney*, 15 Mass. 359; *Society for Propagating the Gospel* v. *Whitcomb*, 2 N. H. 227; *Hardy* v. *Corlis*, 21 N. H. 356; *Updike* v. *Ten Broeck*, 32 N. J. L. 105; *Whitaker* v. *Turnbull*, 3 Harrison (N. J.) 174; *Jackson* v. *Brooks*, 14 Wend. 649.

The delivery of a writ to the coroner's wife at the coroner's office in the absence of the coroner is deemed the commencement of the suit.

Bronson v. *Woolsey*, 17 Johns. 53; *Visscher* v. *Gansevoort*, 18 Johns. 496; *Ross* v. *Luther*, 4 Cow. 158; *Johnson* v. *Farwell*, 7 Greenl. 370.

Messrs. **Alfred L. Cary** and *F. C. Winkler* for defendant in error.

Mr. Justice **Gray** delivered the opinion of the court:

The cause of action accrued May 13, 1862, when the judgment sued on was recovered; and the case turns upon the question whether the action was commenced within ten years afterwards.

As the facts relied on by the plaintiff to prevent the bar of the Statute of Limitations occurred in May, 1872, the question is not affected by the Act of Congress of June 1, 1872, chap. 255, § 5, requiring the practice, pleadings, and forms and modes of proceedings, in actions at law in the Circuit and District Courts of the United States, to conform, as near as may be, to those of the courts of record of the State. 17 Stat. at L. 197; Rev. Stat. § 914.

Before the Act of 1872, the form of mesne process and the forms and modes of proceeding in actions at law in the courts of the United States in Wisconsin were such as were used in the highest court of original jurisdiction of the State at the time of its admission into the Union in 1848. Acts of May 19, 1828, chap. 68, 4 Stat. at L. 278; August 6, 1846, chap. 89, § 4, and May 29, 1848, chap. 50, 9 Stat. at L. 57, 233; *United States* v. *Keokuk Council*, 73 U. S. 6 Wall. 514 [18: 933]. [696]

But it had been settled by a series of decisions of this court that Statutes of Limitations, even in personal actions, including actions on judgments, were "laws of the several States" which, except where the Constitution, treaties or statutes of the United States otherwise required or provided, must, under the Judiciary Act of September 24, 1789, chap. 20, § 34, "be regarded as rules of decision in trials at common law in the courts of the United States in cases where they apply." 1 Stat. at L. 92; Rev. Stat. § 721; *Beatty* v. *Burnes*, 12 U. S. 8 Cranch, 98 [3: 500]; *M'Cluny* v. *Silliman*, 28 U. S. 3 Pet. 270 [7: 676]; *Alabama Bank* v. *Dalton*, 50 U. S. 9 How. 522 [13: 242]; *Bacon* v. *Howard*, 61 U. S. 20 How. 22 [15: 811]; *Amy* v. *Dubuque*, 98 U. S. 470 [25: 228]. Statutes of Limitation of personal actions are laws affecting remedies only, and not rights, as is clearly shown by the decisions that the only Statutes of Limitation applicable to such an action are the statutes of the State where the action is brought, and not those of the State where the cause of action arose. *M'Elmoyle* v. *Cohen*, 38 U. S. 13 Pet. 312 [10: 177]; *Townsend* v. *Jemison*, 50 U. S. 9 How. 407 [13: 194]; *Walsh* v. *Mayer*, 111 U. S. 31 [28: 338]. It was thus established that Statutes of Limitations of the State governed personal actions in the courts of the United States. Otherwise, in the absence of congressional legislation, there would be no limitation of the time of bringing any personal action in a court of the United States.

The statute of Wisconsin upon this subject, in force in May, 1872, was chapter 138 of the Revised Statutes of 1858, entitled "Of the Limitation of Actions," the material provisions of which are as follows:

"SEC. 1. Civil actions can only be commenced within the periods prescribed in this

chapter, except when in special cases a different limitation is prescribed by statute."

"SEC. 14. The periods prescribed in section one of this chapter for the commencement of actions, other than for the recovery of real property, shall be as follows:"

"SEC. 16. Within ten years: 1. An action upon a judgment or decree of any court of record of any State or Territory within the United States, or of any court of the United States."

[697] "SEC. 27. An action shall be deemed commenced as to each defendant, when the summons is served on him, or on a codefendant, who is a joint contractor or otherwise united in interest with him. An attempt to commence an action shall be deemed equivalent to the commencement thereof, within the meaning of this chapter, where the summons is delivered, with the intent that it shall be actually served, to the sheriff or other proper officer of the county in which the defendants or one of them usually or last resided." "But such an attempt must be followed by the first publication of the summons, or the service thereof, within sixty days."

The first sentence of the last section, declaring that the service of the summons shall be deemed the commencement of the action, is embodied in the Statute of Limitations, and is as clearly a part of it as the second sentence of the section, declaring that an attempt to commence an action by delivery of the summons to an officer with intent that it shall be actually served shall be deemed equivalent to a commencement thereof. The words "within the meaning of this chapter" were fitly inserted in the second sentence, in order to make clear the intent of the Legislature that this sentence laid down a rule applicable only to the limitation of actions; and were naturally omitted in the first sentence, because the rule therein laid down accorded with similar provisions in a previous chapter, entitled "Of the Manner of Commencing Civil Actions," chap. 124, §§ 1, 11.

The legal construction and effect of section 27 of chapter 138, taken in connection with the preceding sections of the same chapter, is that the service of the summons, or its delivery to an officer with intent that it shall be served, is the act by which the period of limitation must be computed; and the definition of that act is an integral part of the Statute of Limitations, and as such applicable, as the rest of the statute undoubtedly is, to actions in the courts of the United States.

But in order to come within the second sentence of that section, requiring the summons to be "delivered, with the intent that it shall be actually served, to the sheriff or other proper officer," it does not appear to us to be necessary [698] that there should be a manual delivery of the summons to the officer in person. It would be sufficient, for instance, if the attorney left it on the marshal's desk or other place in the marshal's office, so that the marshal would understand that it was left with him for service. It would be equally sufficient if the attorney, or the clerk acting by his direction, placed the summons in a box in the clerk's office, designated by the marshal, with the clerk's assent, as a place where processes to be served by him should be deposited, and from which he usually took them daily.

The defendant much relies on an opinion of the Supreme Court of Wisconsin, in which it was said that "The fact that the summons was not placed in the hands of an officer of the county in which the action was intended to be commenced would be fatal to the claim that there was an attempt to commence the action within the meaning of § 4240" of the Revised Statutes of 1878, corresponding to § 27 of chap. 138 of the Revised Statutes of 1858. *Sherry* v. *Gilmore*, 58 Wis. 324, 334. But in that case there was no service or attempt to serve, except through the mail; and the court had not before it the question whether depositing a process in a place provided or designated by the officer was equivalent to putting it in his own hands.

In the case at bar, the testimony introduced by the plaintiff tended to show that the attorney filled out the *præcipe* to the clerk to issue the summons, and filed the *præcipe* with the clerk on May 11, 1872, and immediately went to the marshal's office, one story above, in the same building, and told him there was in the clerk's office a summons in this case for service. The summons issued by the clerk bore date of the same day. The clerk testified that he presumed that the summons must have been made out on the day of its date, and knew nothing to the contrary; that his custom was to issue the summons on the same day the *præcipe* was filed, and he had no recollection of ever having neglected to do so; but had no personal recollection about this particular summons. He also testified that there was a box on a bookcase near the door in his office, where he usually placed such writs as were waiting for the [699] marshal, so that he could stop in, open the door, and get them and take them up, and he usually stopped on his way up and down stairs and got such writs; and that the practice of the clerk's office was to put writs in that box for the marshal on the day on which they were issued, but the clerk sometimes delivered processes to the attorney to take to the marshal, and sometimes, if the marshal did not come down immediately, took them up to him.

Upon this testimony, the questions, whether the box in the clerk's office had been duly designated by the marshal as a place where processes to be served by him should be deposited, and whether the summons in this case was either deposited by the clerk in that box, or delivered by him to the marshal, within ten years after May 13, 1862, when the cause of action accrued, were not questions of law for the court, but questions of fact, which should have been submitted to the jury. The court therefore erred in not giving the instruction requested, and in directing the jury to return a verdict for the defendant.

Judgment reversed and case remanded, with directions to set aside the verdict and to order a new trial.

[699] GEORGE W. HILL, *Plff. in Err.*,
v.
GEORGE F. HARDING ET AL.

(See S. C. Reporter's ed. 699-704.)

Discharge in bankruptcy, effect of in attachment suit—sureties on attachment bond—effect on them of discharge of principal.

1. A discharge in bankruptcy does not prevent an attaching creditor from taking judgment against the debtor in such limited form as may enable him to reap the benefit of his attachment.
2. When the attachment remains in force, the creditor, notwithstanding the discharge, may have judgment against the bankrupt, to be levied only upon the property attached.
3. When the attachment has been dissolved by the defendant entering into a bond or recognizance, with sureties, conditioned to pay to the plaintiffs any judgment rendered against him on a final trial, there is nothing in the Bankrupt Act to prevent the state court from rendering a judgment against the bankrupt, notwithstanding his discharge, for the purpose of enabling plaintiffs to proceed against the sureties in the bond given on the attachment.
4. If the bond was executed before the commencement of proceedings in bankruptcy, the discharge of the bankrupt protects him from liability to the obligees, so that, in an action on the bond against him and his sureties, any judgment recovered by the plaintiffs must be accompanied with a perpetual stay of execution against him; but his discharge does not prevent that judgment from being rendered generally against them.

[No. 253.]

Submitted April 16, 1889. Decided May 13, 1889.

IN ERROR to the Supreme Court of the State of Illinois, to review a judgment of that Court, affirming a judgment of an inferior Court of the State on a verdict for the plaintiffs in an action of assumpsit commenced by attachment of defendant's real estate, and an order for a perpetual stay of execution. *Affirmed.*

Reported below, 2 West. Rep. 885, 116 Ill. 92.

Statement by *Mr. Justice* **Gray:**

[700] This was an action of assumpsit, commenced by Harding and others against Hill in an inferior court of the State of Illinois, in accordance with the statutes of the State, by attachment of the defendant's real estate. The attachment was dissolved, in accordance with those statutes, by the defendant giving bond, or, more strictly speaking, entering into a recognizance, with sureties, conditioned to pay to the plaintiffs "the amount of the judgment and costs which may be rendered against him in this suit on a final trial hereof, within ninety days after such judgment shall be rendered." After verdict for the plaintiffs, and before judgment thereon, and on proceedings in bankruptcy commenced more than four months after the attachment, the defendant was adjudged a bankrupt under the Bankrupt Act of the United States, and applied to the state court, under § 5106 of the Revised Statutes, for a stay of proceedings to await the determination of the court in bankruptcy upon the question of his discharge. The application was denied, and judgment rendered against the defendant on the verdict, and upon a bill of exceptions, stating these facts, that judgment was affirmed by the supreme court of the State. 93 Ill. 77. Upon a former writ of error, this court reversed the judgment of that court and remanded the case to it for further proceedings, upon the ground that the defendant was entitled to the stay applied for, without considering the question whether the court in which the suit was pending might, after the defendant had obtained his discharge in bankruptcy, render a special judgment in favor of the plaintiffs for the purpose of charging the sureties on the recognizance given to dissolve the attachment. 107 U. S. 631, 635 [27: 493, 495].

The case was then remanded by the Supreme Court of Illinois to the inferior court with a direction that, upon its satisfactorily appearing that the defendant since the verdict had obtained his discharge in bankruptcy, a judgment should be entered for the plaintiff and against the defendant upon the verdict, with a perpetual stay of execution. The inferior court thereupon denied a motion of the defendant for leave to file a formal plea setting up his discharge in bankruptcy; admitted in evidence a copy of that discharge, offered by the plaintiff and objected to by the defendant as not duly [701] verified; refused the defendant's request for a trial by jury on the question of his discharge in bankruptcy; denied a motion to enter a judgment in his favor, releasing him from all liability subsequent to the commencement of the proceedings in bankruptcy, on account of all causes of action involved in this suit; and ordered judgment on the verdict, pursuant to the mandate of the supreme court of the State, with a perpetual stay of execution. Upon a bill of exceptions the judgment and order were affirmed by the Supreme Court of Illinois. 116 Ill. 92 [2 West. Rep. 885]. The defendant sued out this writ of error.

Mr. **George W. Brandt,** for plaintiff in error:

Sureties are favorites in law, and no intendments will be made against them.

Law v. *East India Co.* 4 Ves. Jr. 824; *Lang* v. *Pike*, 27 Ohio St. 498; *Kingsbury* v. *Westfall*, 61 N. Y. 356; *Stull* v. *Hance*, 62 Ill. 55; *People* v. *Tompkins*, 74 Ill. 486; *Pickersgill* v. *Lahens*, 82 U. S. 15 Wall. 140 (21 L. ed. 119); *Risley* v. *Brown*, 67 N. Y. 160; *Weaver* v. *Shryock*, 6 Serg. & R. 262; *Rawstone* v. *Parr*, 3 Russ. 539; *Kennedy* v. *Carpenter*, 2 Whart. 362; *Other* v. *Iveson*, 3 Drew. 177; *Towne* v. *Ammidown*, 20 Pick. 535; *Wood* v. *Fisk*, 63 N. Y. 245.

A surety is under no moral obligation to pay the debt of his principal.

Winston v. *Rives*, 4 Stew. & P. (Ala.) 269; *Harrison* v. *Field*, 2 Wash. (Va.) 136; *Pecker* v. *Julius*, 2 Browne (Pa.) 31; *Van Derveer* v. *Wright*, 6 Barb. 547.

Mr. **John M. Glover,** for defendants in error:

After the discharge, the court may proceed to judgment.

Hill v. *Harding*, 107 U. S. 634 (27: 494); *Re Rosenberg*, 2 Nat. Bankr. Reg. (*81) 236, 3 Ben. 14; *Doe* v. *Childress*, 88 U. S. 21 Wall. 642 (22: 549); *Eyster* v. *Gaff*, 91 U. S. 521 (23: 403); *Norton* v. *Switzer*, 93 U. S. 355 (23: 903); *Davis* v. *Friedlander*, 104 U. S. 570 (26: 818).

The judgment entered, with perpetual stay of execution, was a special judgment.

Hill v. *Harding*, 2 West. Rep. 885, 116 Ill. 98; *Byers* v. *First Nat. Bank*, 85 Ill. 426; *Baker* v. *Taylor*, 1 Cow. 165; *Holyoke* v. *Adams*,